9. EXPLODED VIEWS AND PARTS LIST

NOTES:
- *Parts marked by "NSP" are generally unavailable because they are not in our Master Spare Parts List.*
- *The ⚠ mark found on some component parts indicates the importance of the safety factor of the part. Therefore, when replacing, be sure to use parts of identical designation.*
- *Screws adjacent to ▼ mark on product are used for disassembly.*
- *For the applying amount of lubricants or glue, follow the instructions in this manual. (In the case of no amount instructions, apply as you think it appropriate.)*

9.1 PACKING SECTION

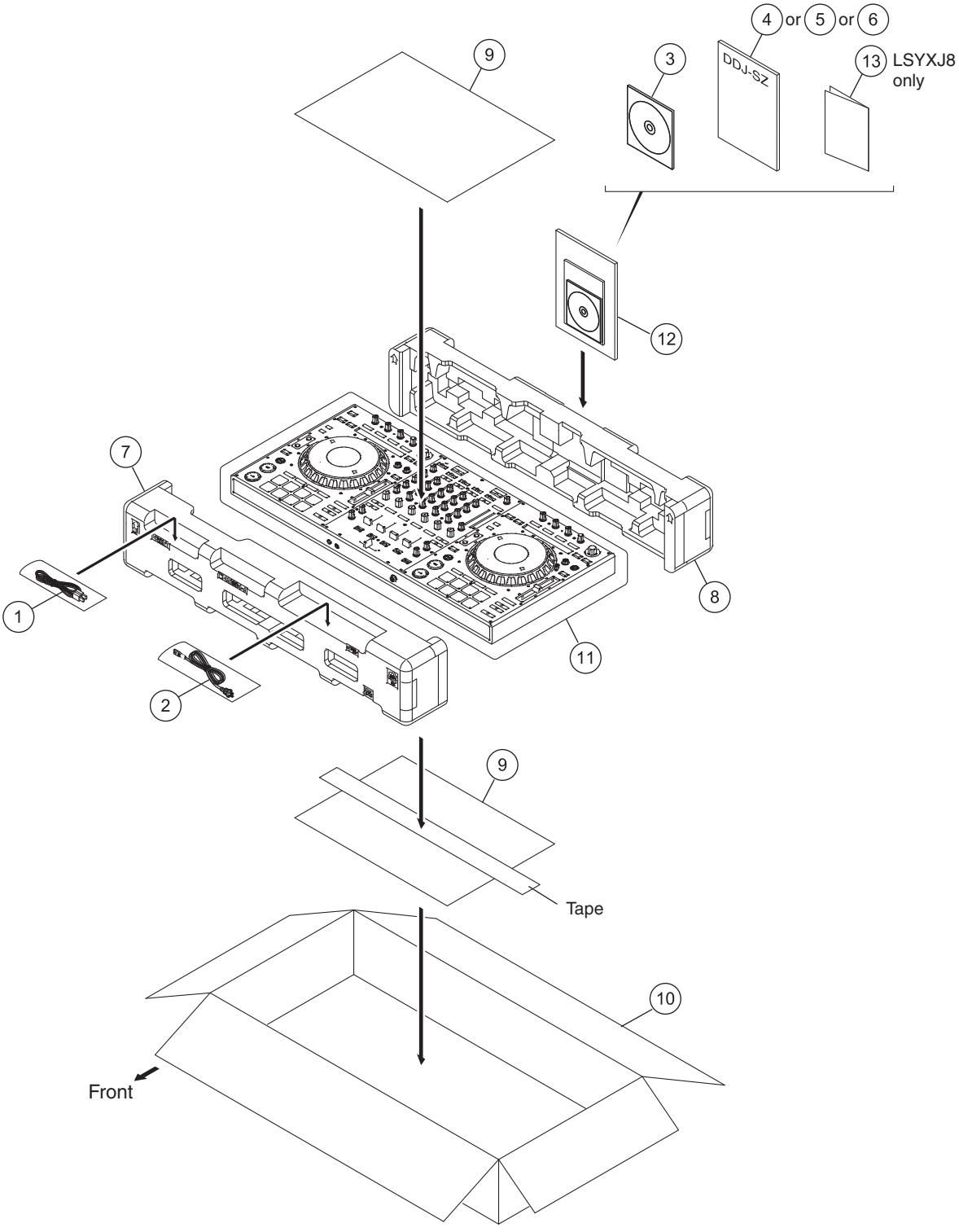

(1) PACKING SECTION PARTS LIST

Mark	No.	Description	Part No.
	1	USB Cable	DDE1128
⚠	2	Power Cord	See Contrast table (2)
	3	CD-ROM (Installation Disc)	DXX2754
	4	Operating Instructions (Basic Edition)	See Contrast table (2)
	5	Operating Instructions (Basic Edition)	See Contrast table (2)
	6	Operating Instructions (Basic Edition)	See Contrast table (2)
	7	Pad/F	DHA1904
	8	Pad/R	DHA1905
	9	Packing Board/ACC	DHC1084
	10	Packing Case	See Contrast table (2)
	11	Mirror Mat (1200*1000)	DHL1169
NSP	12	Polyethylene Bag	AHG7117
NSP	13	Warranty Card	See Contrast table (2)

(2) CONTRAST TABLE

DDJ-SZ/UXJCB, LSYXJ8 and XJCN5 are constructed the same except for the following:

Mark	No.	Symbol and Description	DDJ-SZ /UXJCB	DDJ-SZ /LSYXJ8	DDJ-SZ /XJCN5
⚠	2	Power Cord	DDG1108	ADG1244	DDG1114
	4	Operating Instructions (Basic Edition)(En)	DRH1247	Not used	Not used
	5	Operating Instructions (Basic Edition)(En, Fr, De, It, Nl, Es, Pt, Ru)	Not used	DRH1249	Not used
	6	Operating Instructions (Basic Edition)(Zhcn)	Not used	Not used	DRH1250
	10	Packing Case	DHG3305	DHG3304	DHG3308
NSP	13	Warranty Card	Not used	ARY7158	Not used

9.2 TOP and CHASSIS SECTION

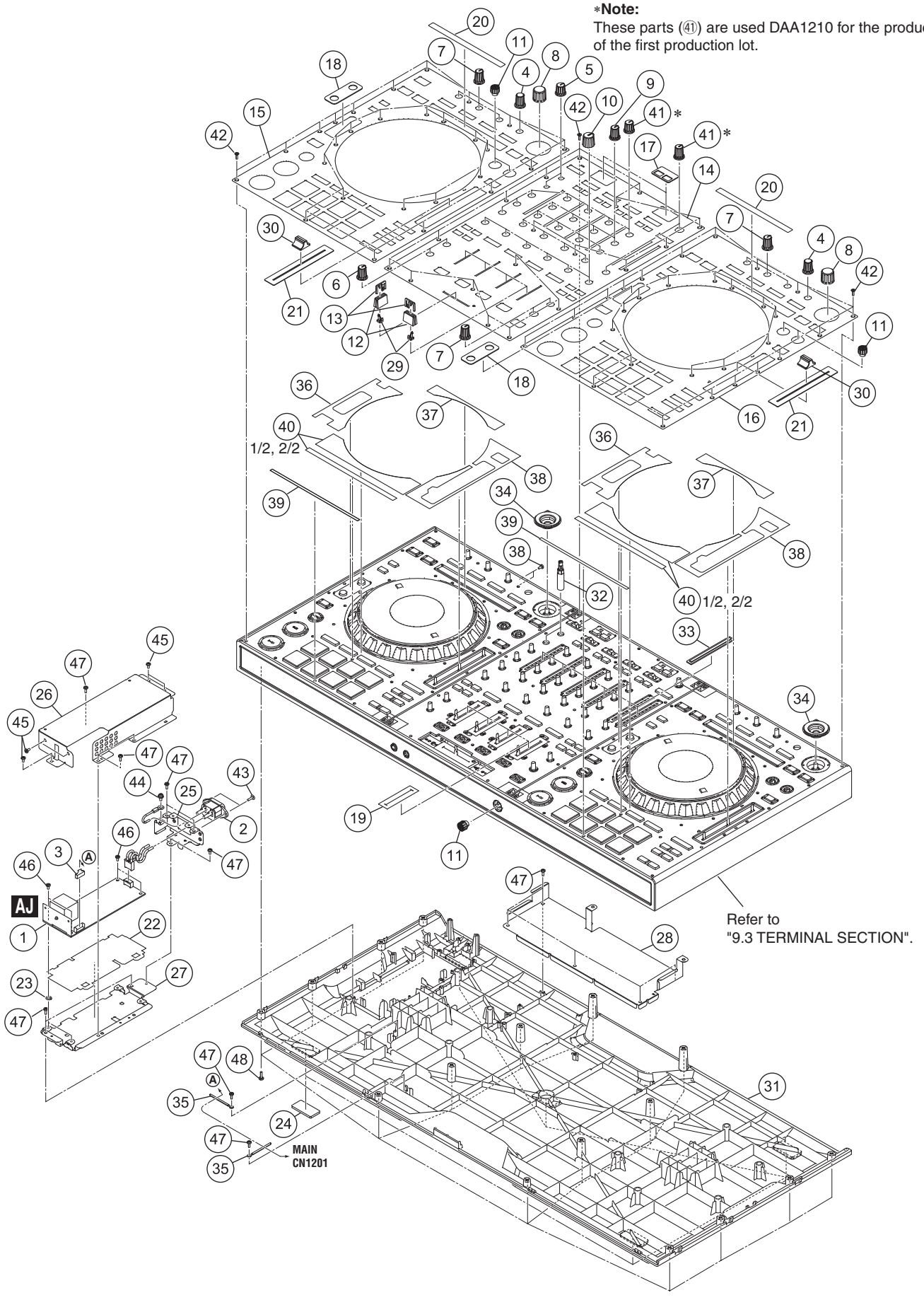

TOP and CHASSIS SECTION PARTS LIST

Mark	No.	Description	Part No.
⚠	1	POWER SUPPLY Assy	DWR1463
⚠	2	AC Inlet/3P	DKP3954
	3	Crimp Connector/6P	DKP3956
	4	Rotary Sw Knob (C)	DAA1180
	5	Knob (MA)	DAA1210
	6	Knob (Black)	DAA1212
	7	Rotary Knob (BN)	DAA1220
	8	Dial Knob	DAA1259
	9	Knob/RSW	DAA1305
	10	Knob/FRE	DAA1309
	11	Knob/CFC	DAA1326
	12	Slider Knob 1	DAC2684
	13	Slider Knob 2	DAC2685
	14	Plate/MIX	DAH2976
	15	Plate/DEL	DAH2982
	16	Plate/DER	DAH2983
	17	Panel/USB	DAH2984
	18	Panel/DEC	DAH2986
	19	Fader Packing	DEC3355
	20	Sheet/CDC	DEC3532
	21	Sheet/TMP	DEC3541
	22	Barrier/SWP	DEC3553
	23	Washer/PWR	DEC3554
	24	Sheet/LEG	DEC3557
	25	Bracket/ACI	DNF1932
	26	Shield Case/U	DNH3142
	27	Shield Case/L	DNH3143
	28	Shield Plate	DNH3155
	29	Slider Knob Stopper	DNK5888
	30	Knob/SLD	DNK5981
	31	Chassis	DNK6286
	32	Shaft/EXT	DNK6305
	33	Lens/LVL	DNK6306
	34	Ring/BRS	DNK6312
	35	Cord Clamper (Steel)	RNH-184
	36	DS Tape/ALL	DEH1048
	37	DS Tape/ALT	DEH1049
	38	DS Tape/ALR	DEH1050
	39	DS Tape/ALB	DEH1051
	40	DS Tape/PAJ	DEH1056
	41	Knob/SHR	DAA1333
	42	Screw	CPZ26P080FTB
	43	Screw	IBZ30P080FTB
	44	Screw	PMH40P080FTC
	45	Screw	BBZ30P060FTB
	46	Screw	BBZ30P080FTB
	47	Screw	BPZ30P080FNI
	48	Screw	BPZ30P100FTB

9.3 TERMINAL SECTION

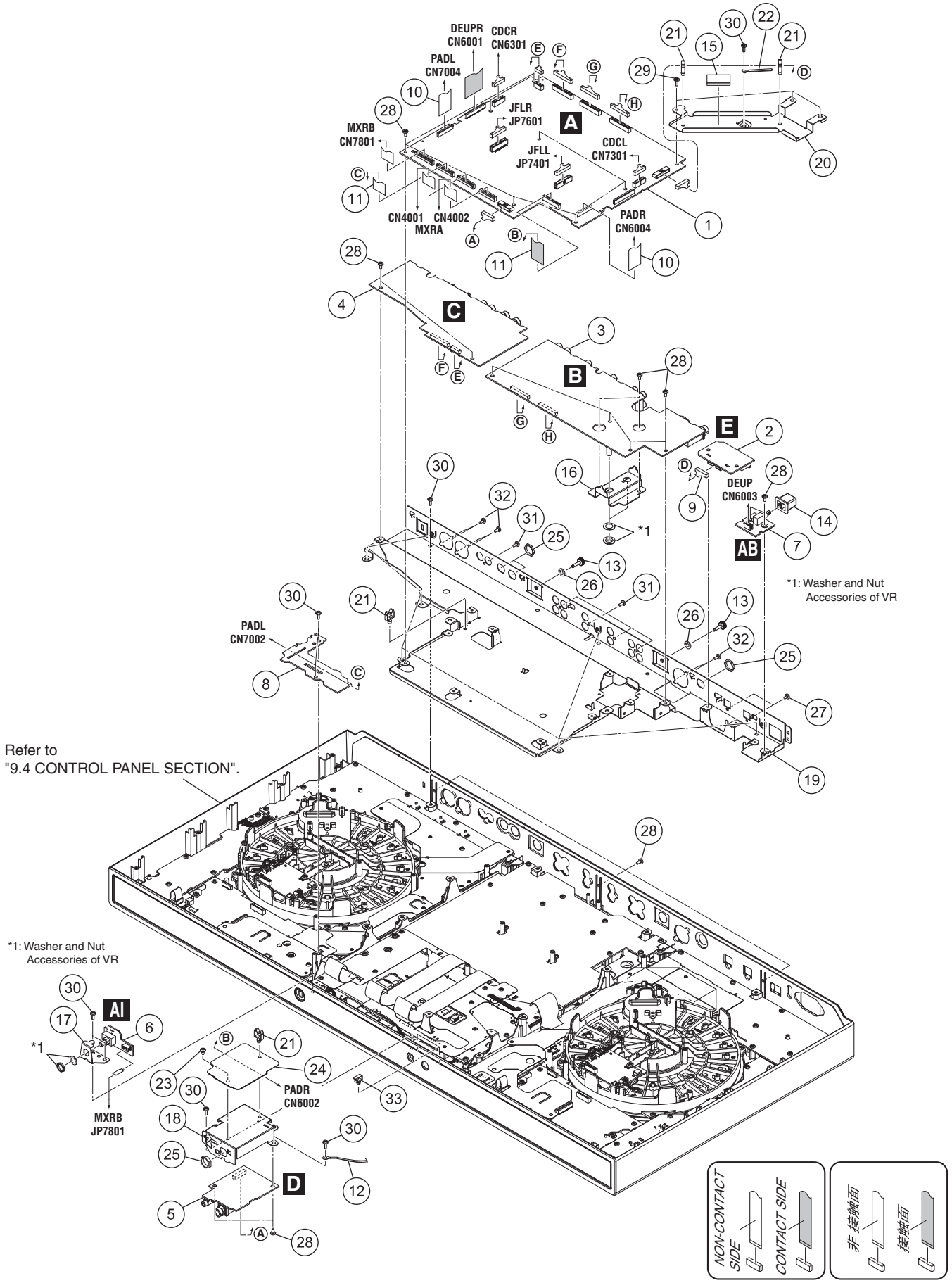

TERMINAL SECTION PARTS LIST

Mark	No.	Description	Part No.
	1	MAIN Assy	DWX3535
	2	USBB Assy	DWX3555
	3	AIJK Assy	DWX3536
	4	AOJK Assy	DWX3537
	5	HPJK Assy	DWX3538
	6	CRFCV Assy	DWX3547
	7	PSWB Assy	DWX3560
	8	STRB Assy	DWX3585
	9	Shielded Conn-Cable	DDA1048
	10	FFC/23P	DDD1658
	11	FFC/25P	DDD1659
	12	Earth Lead Wire	DE012VC0
	13	Earth Terminal	DKE1015
	14	Power Knob	DAC2306
	15	Sheet/LEG	DEC3534
	16	Bracket/TRM	DNF1933
	17	Stay/CFC	DNF1935
	18	Stay/HP	DNF1937
	19	Plate/MGD	DNH3139
	20	Shield Plate/USB	DNH3156
	21	Holder	VEC1355
	22	Cord Clamper (Steel)	RNH-184
	23	Push Rivet	XEC3034
	24	Barrier/HP	DEC3548
	25	Nut (M12)	NKX2FNI
	26	Spring Lock Washer	WS40FNI
	27	Screw (M3*5)	DBA1340
	28	Screw	BBZ30P060FTB
	29	Screw	BBZ30P080FTB
	30	Screw	BPZ30P080FNI
	31	Screw	BPZ30P080FTB
	32	Screw	PPZ30P080FTB
	33	Locking Mini Clamp	DEC2439

9.4 CONTROL PANEL SECTION

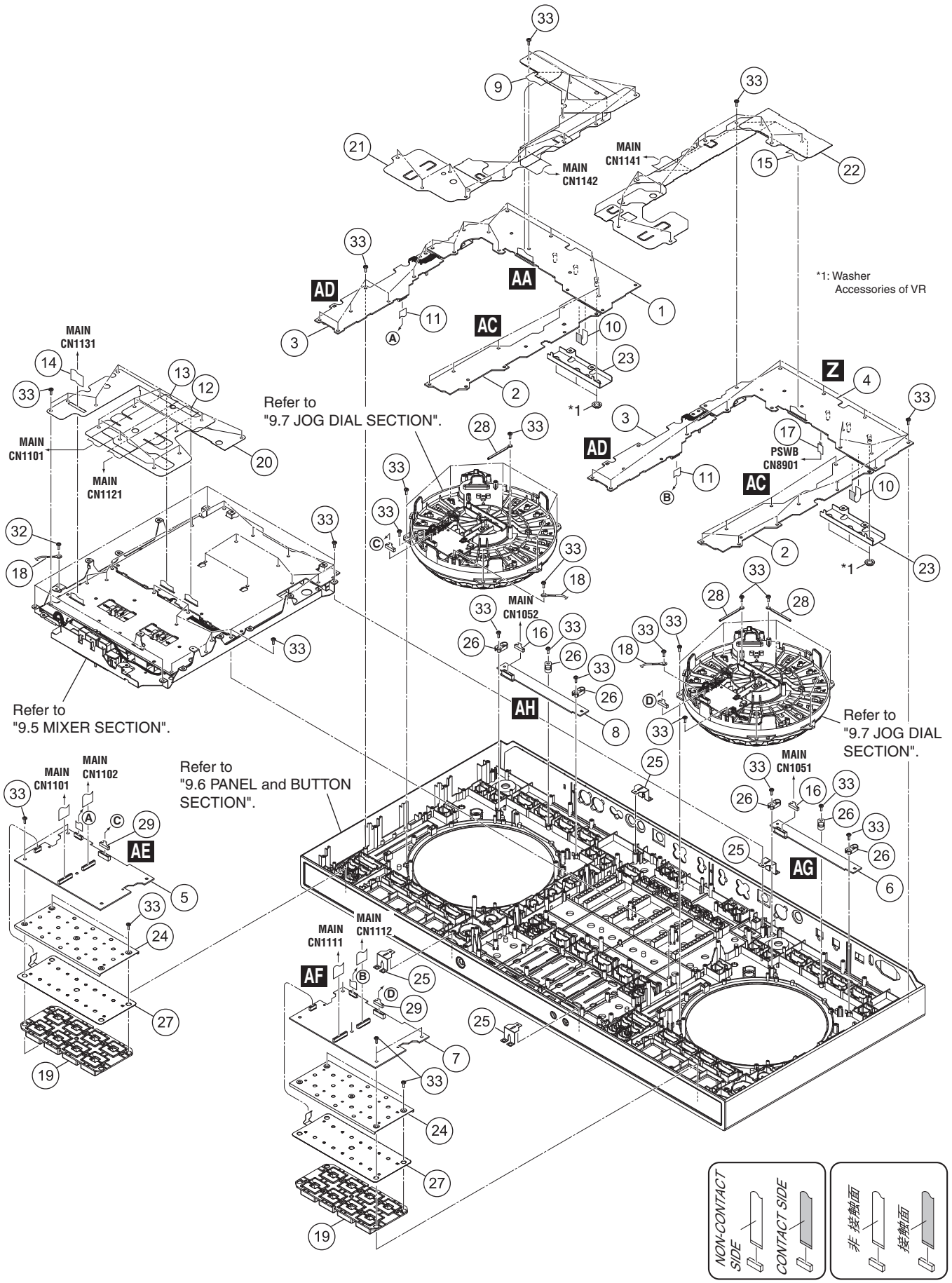

CONTROL PANEL SECTION PARTS LIST

Mark	No.	Description	Part No.
	1	DEUP Assy	DWX3548
	2	KSWB Assy	DWX3549
	3	SLDB Assy	DWX3550
	4	DEUPR Assy	DWX3580
	5	PADL Assy	DWX3553
	6	CDCL Assy	DWX3554
	7	PADR Assy	DWX3583
	8	CDCR Assy	DWX3584
	9	FFC/32P	DDD1657
	10	FFC/15P	DDD1660
	11	FFC/13P	DDD1661
	12	FFC/25P	DDD1662
	13	FFC/23P	DDD1663
	14	FFC/27P	DDD1664
	15	FFC/32P	DDD1672
	16	Crimp Connector	PF08PP-B30
	17	Jumper Wire	D20PYY0310E
	18	Earth Lead Wire	DE012VC0
	19	Button/PAD	DEB2005
	20	Barrier/MIX	DEC3545
	21	Barrier/DEL	DEC3546
	22	Barrier/DER	DEC3547
	23	Stay/PL	DND1279
	24	Bracket/FSR	DNF1930
	25	Plate/ART	DNH3144
	26	CDC Stopper	DNK5863
	27	Sensor	DSX1124
	28	Cord Clamper (Steel)	RNH-184
	29	Connector Assy	PF08PP-B07
	30	•••••	
	31	•••••	
	32	Screw	BBZ30P060FTB
	33	Screw	BPZ30P080FNI

9.5 MIXER SECTION

Lubricating oil (GYA1001)

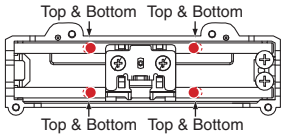

Note:
Greasing must be performed at a total of 8 points, 2 points each for the upper and bottom places of each shaft. (0.4 to 1 mg per point × 8 points)
After applying grease, move the slider base back and forth from one end to the other for approximately 10 to 20 strokes, in order to fully spread the grease.

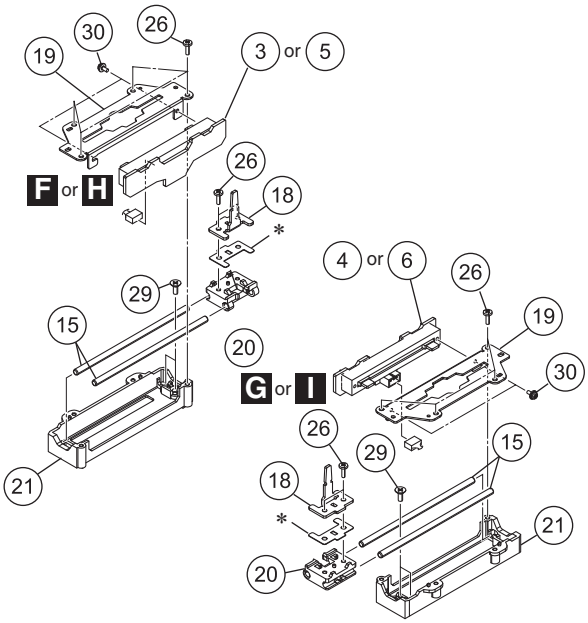

∗**Note:**
The spacer/CHF (Part No.: DEC3558) is used only for the products of the first production lot.
Be sure to insert the spacer into the position shown in the figure during reassembly after disassembly.

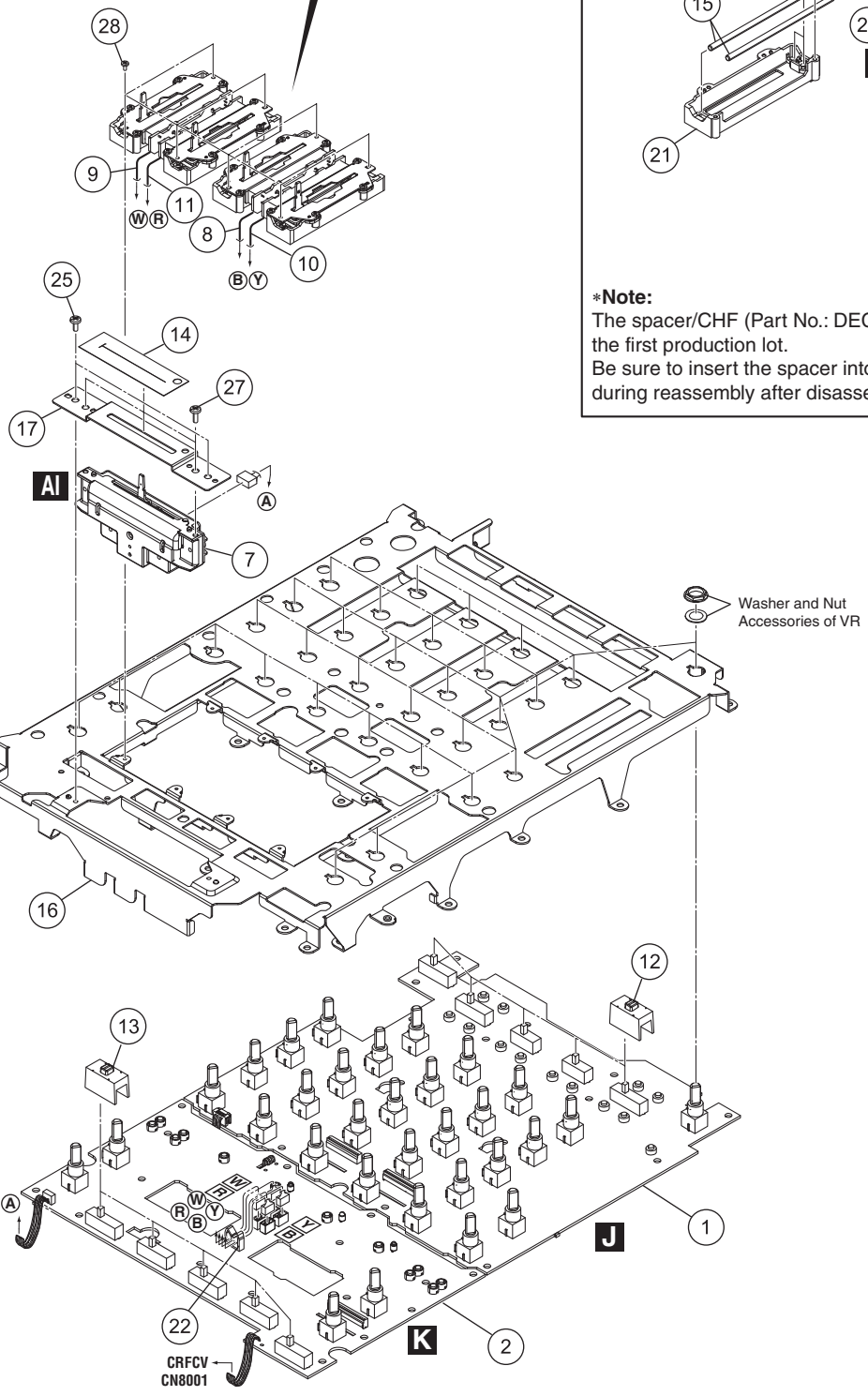

MIXER SECTION PARTS LIST

Mark	No.	Description	Part No.
	1	MXRA Assy	DWX3543
	2	MXRB Assy	DWX3544
	3	FAD1 Assy	DWX3540
	4	FAD2 Assy	DWX3541
	5	FAD3 Assy	DWX3539
	6	FAD4 Assy	DWX3542
	7	CROSS FADER Assy	DXA2257
	8	Connector Assy	PF03PP-B12
	9	Connector Assy	PF03PP2B07
	10	Connector Assy	PF03PP4B12
	11	Connector Assy	PF03PP6B07
	12	Slide SW Cap	DAC2400
	13	Slide SW Cap (W)	DAC2401
	14	Packing/FAD	DEC3542
NSP	15	Guide Shaft (S)	DLA1918
	16	Stay/MIX	DND1280
	17	Stay/CRF	DNF1936
	18	Lever Plate	DNH2954
	19	VR Stay	DNH2955
	20	Slider Base	DNK5851
	21	Shaft Holder	DNK5852
	22	Holder	VEC1355
	23	•••••	
	24	•••••	
	25	Screw	BBZ30P060FTB
	26	Screw	BPZ20P060FTC
	27	Screw	BPZ30P080FNI
	28	Screw	BSZ20P040FTB
	29	Screw	CPZ26P080FTC
	30	Screw	PMH20P040FTC

9.6 PANEL and BUTTON SECTION

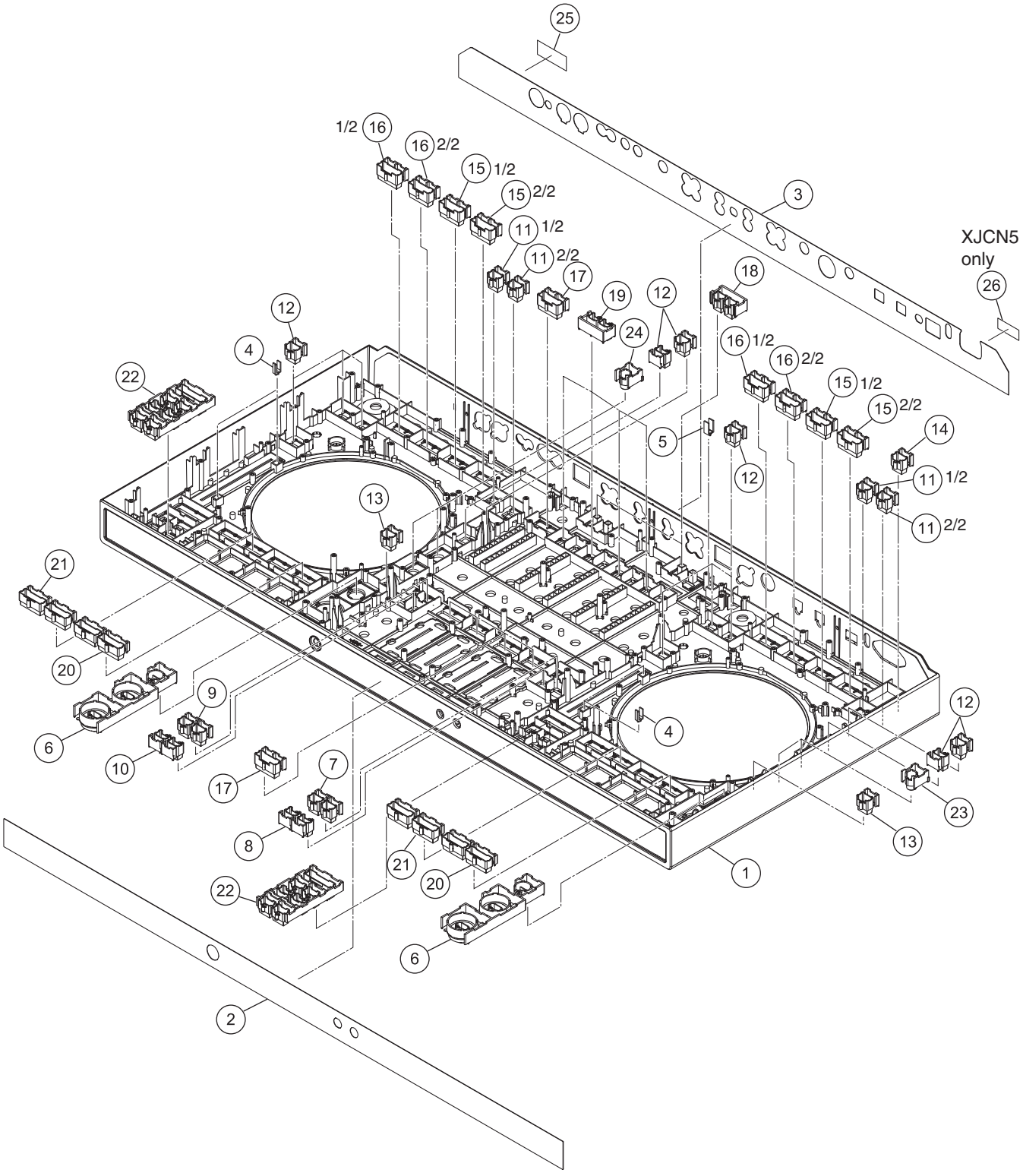

(1) PANEL and BUTTON SECTION PARTS LIST

Mark	No.	Description	Part No.
	1	Control Panel	DNK6285
	2	Sheet/FR	DAH2991
	3	Sheet	See Contrast table (2)
	4	Lens/TMP	DNK6307
	5	Lens/MIC	DNK6308
	6	Button/PLY	DAC2982
	7	Button/CX1	DAC2983
	8	Button/CX2	DAC2984
	9	Button/FX1	DAC2985
	10	Button/FX2	DAC2986
	11	Button/CEN	DAC2987
	12	Button/ANY	DAC2988
	13	Button/SHT	DAC2989
	14	Button/PNL	DAC2990
	15	Button/ON	DAC2991
	16	Button/TAP	DAC2992
	17	Button/CUE	DAC2993
	18	Button/USB	DAC2994
	19	Button/FX	DAC2995
	20	Button/PM1	DAC2996
	21	Button/PM2	DAC2997
	22	Button/ATL	DAC2998
	23	Button/DEL	DAC3000
	24	Button/DEL	DAC3001
NSP	25	Serial Label (UPC)	DRW2311
NSP	26	Name Label /CSZ	See Contrast table (2)

(2) CONTRAST TABLE

DDJ-SZ/UXJCB, LSYXJ8 and XJCN5 are constructed the same except for the following:

Mark	No.	Symbol and Description	DDJ-SZ /UXJCB	DDJ-SZ /LSYXJ8	DDJ-SZ /XJCN5
	3	Sheet	DAH2992	DAH2992	DAH2994
NSP	26	Name Label/CSZ	Not used	Not used	DAL1269

9.7 JOG DIAL SECTION

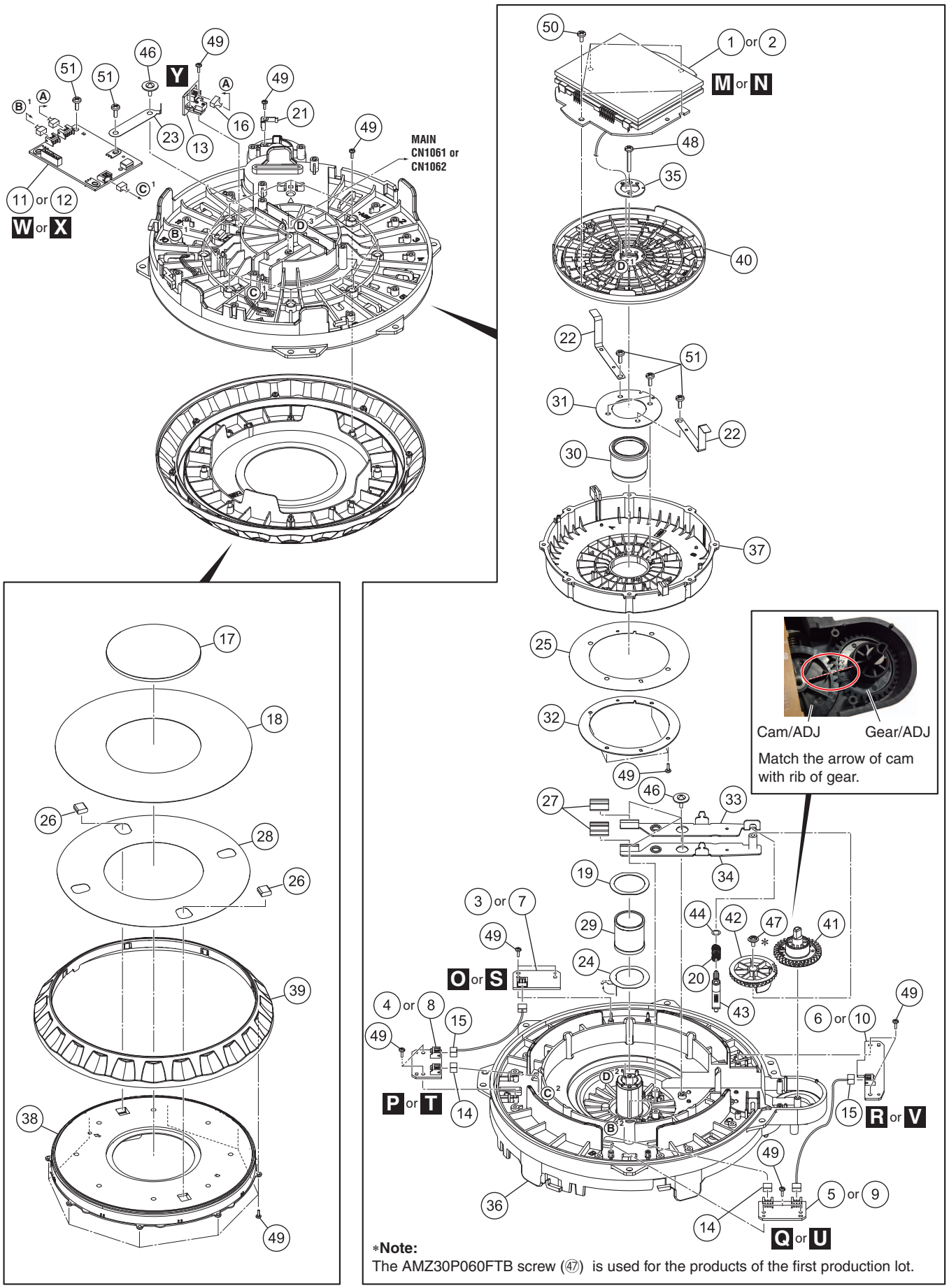

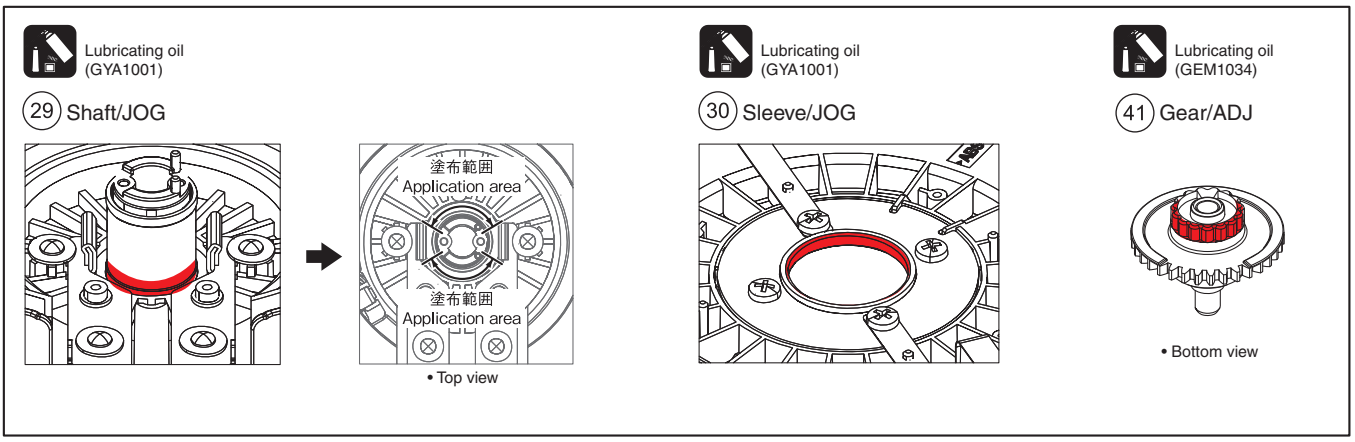

JOG DIAL SECTION PARTS LIST

Mark	No.	Description	Part No.
	1	JFLL Assy	DWX3545
	2	JFLR Assy	DWX3546
	3	JLL1 Assy	DWX3556
	4	JLL2 Assy	DWX3557
	5	JLL3 Assy	DWX3558
	6	JLL4 Assy	DWX3559
	7	JLR1 Assy	DWX3561
	8	JLR2 Assy	DWX3562
	9	JLR3 Assy	DWX3563
	10	JLR4 Assy	DWX3564
	11	JOGTL Assy	DWX3551
	12	JOGTR Assy	DWX3565
	13	JOGR Assy	DWX3552
	14	Connector Assy	PF03PP-B07
	15	Connector Assy	PF03PP-B12
	16	Connector Assy	PF04PP-B12
	17	Jog Panel	DAH2609
	18	Plate/JOG	DAH2915
	19	Washer/JOG	DBE1016
	20	Coil Spring/ADJ	DBH1802
	21	Leaf Spring/ADJ	DBK1376
	22	Leaf Spring/A	DBK1379
	23	Leaf Spring/B	DBK1380
	24	Leaf Spring/C	DBK1382
	25	Slit/JOG	DEC3515
	26	Gasket/JOG	DEC3556
	27	Felt/JOG	DED1187
	28	DS Tape/JOG	DEH1047
	29	Shaft/JOG	DLA2225
	30	Sleeve/JOG	DLA2226

Mark	No.	Description	Part No.
	31	Bracket/JOG	DNH3130
	32	Bracket/SLT	DNH3131
	33	Lever/A	DNH3132
	34	Lever/B	DNH3133
	35	Cover/JOG	DNH3159
	36	Holder/JOG	DNK6269
	37	Jog Dial/BAS	DNK6270
	38	Jog Dial/A	DNK6271
	39	Jog Dial/B	DNK6272
	40	Holder/FL	DNK6273
	41	Gear/ADJ	DNK6274
	42	Cam/ADJ	DNK6275
	43	Pin/ADJ	DNK6276
	44	Washer	WA41D070D025
	45	•••••	
	46	DM Screw (FTC)	DBA1260
	47	Screw	IMZ30P060FTB
	48	Screw	BBZ30P180FTC
	49	Screw	BPZ20P060FTC
	50	Screw	BPZ30P060FTC
	51	Screw	BPZ30P080FNI