9. EXPLODED VIEWS AND PARTS LIST

NOTES:
- *Parts marked by "NSP" are generally unavailable because they are not in our Master Spare Parts List.*
- *The ⚠ mark found on some component parts indicates the importance of the safety factor of the part. Therefore, when replacing, be sure to use parts of identical designation.*
- *Screws adjacent to ▼ mark on product are used for disassembly.*
- *For the applying amount of lubricants or glue, follow the instructions in this manual. (In the case of no amount instructions, apply as you think it appropriate.)*

9.1 PACKING SECTION

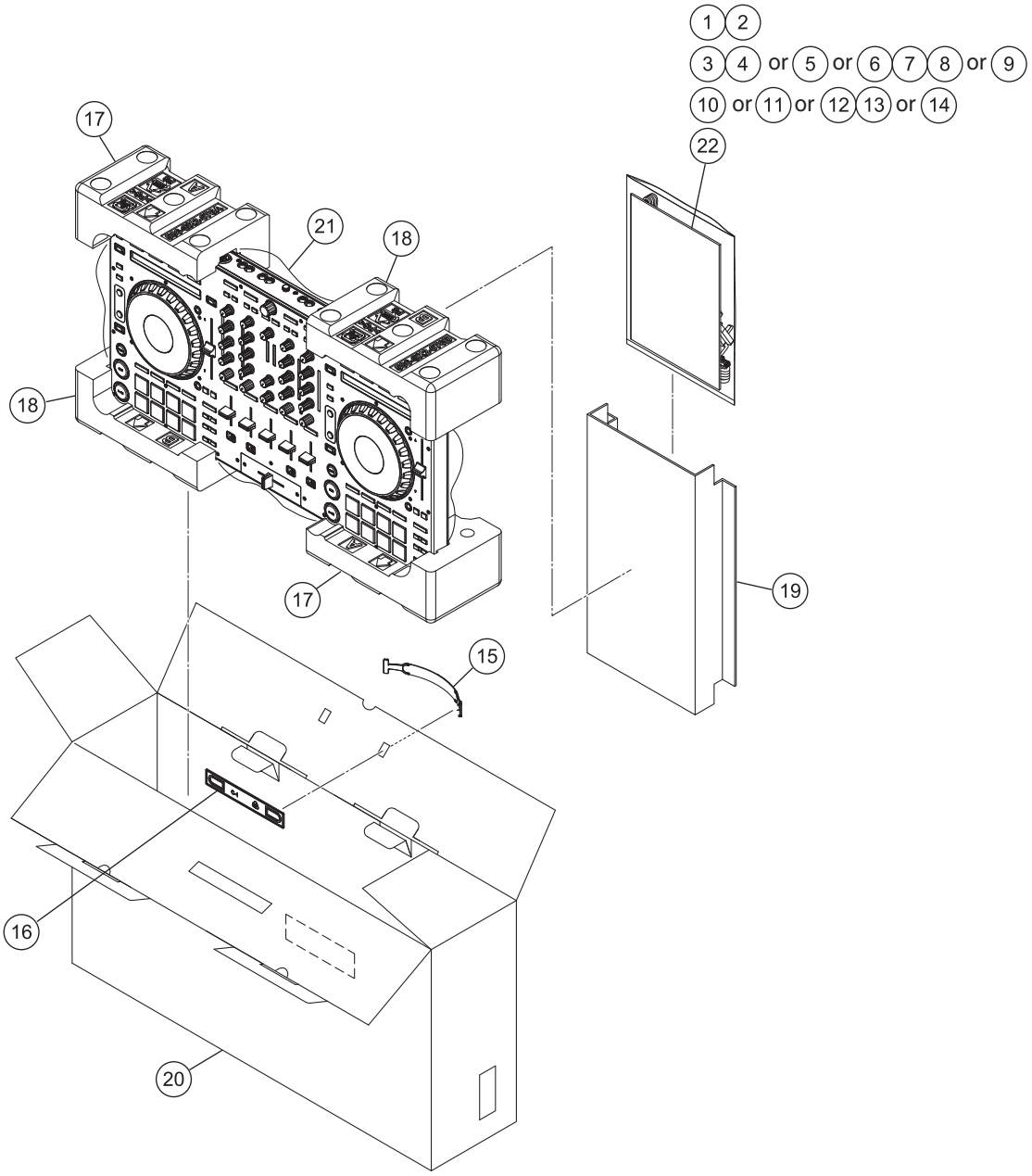

(1) PACKING SECTION PARTS LIST

Mark	No.	Description	Part No.
	1	USB Cable (L = 1500 mm)	408-SUB-132
⚠	2	AC Adapter	411-S1MK2-930
⚠	3	Power Plug	See Contrast table (2)
⚠	4	Power Plug	See Contrast table (2)
⚠	5	Power Plug	See Contrast table (2)
⚠	6	Power Plug	See Contrast table (2)
⚠	7	Power Plug	See Contrast table (2)
⚠	8	Power Plug	See Contrast table (2)
⚠	9	Power Plug	See Contrast table (2)
	10	Quick Start Guide	See Contrast table (2)
	11	Quick Start Guide	See Contrast table (2)
	12	Quick Start Guide	See Contrast table (2)
	13	Quick Start Guide	See Contrast table (2)
	14	Quick Start Guide	See Contrast table (2)
	15	Handle	100-SX-3017
	16	Handle Base	100-SX-3018
	17	Polyfoam A	506-SX2-676A
	18	Polyfoam B	506-SX2-676B
	19	Pasterboard	507-S1-3372-HA
	20	Gift Box	See Contrast table (2)
	21	Soft Bag	509-DDJSX-320-HA
	22	PE Bag (240*340mm, 0.05T)	505-DJM250-014-HA

(2) CONTRAST TABLE

DDJ-SX2/SVYXE8, UXECB, FJKLPXE5 and AXE5 are constructed the same except for the following:

Mark	No.	Symbol and Description	DDJ-SX2 /SVYXE8	DDJ-SX2 /UXECB	DDJ-SX2 /FJKLPXE5	DDJ-SX2 /AXE5
⚠	3	Power Plug	420-DJM250-362-HA	Not used	420-DJM250-362	Not used
⚠	4	Power Plug	420-DJM250-407	Not used	420-DJM250-407	Not used
⚠	5	Power Plug	Not used	420-DJM250-361	Not used	Not used
⚠	6	Power Plug	Not used	Not used	420-DJM250-363-HA	Not used
⚠	7	Power Plug	Not used	Not used	420-DJM250-364-HA	Not used
⚠	8	Power Plug	Not used	Not used	420-DJM250-409	Not used
⚠	9	Power Plug	Not used	Not used	Not used	420-DJM250-408
	10	Quick Start Guide (En, Fr, De, It, Nl, Es, Pt, Ru)	502-DJSXM2B-3417A	Not used	Not used	Not used
	11	Quick Start Guide (En)	Not used	502-DJSXM2A-3416	Not used	Not used
	12	Quick Start Guide (En, Es, Ja)	Not used	Not used	502-DJSXM2F-3419	Not used
	13	Quick Start Guide (Ko)	Not used	Not used	502-DJSXM2F-3429	Not used
	14	Quick Start Guide (Zhcn)	Not used	Not used	Not used	502-DJSXM2D-3418
	20	Gift Box	507-SX2B-3370A	507-SX2A-3370	507-SX2F-3370A	507-SX2D-3370

9.2 EXTERIOR SECTION

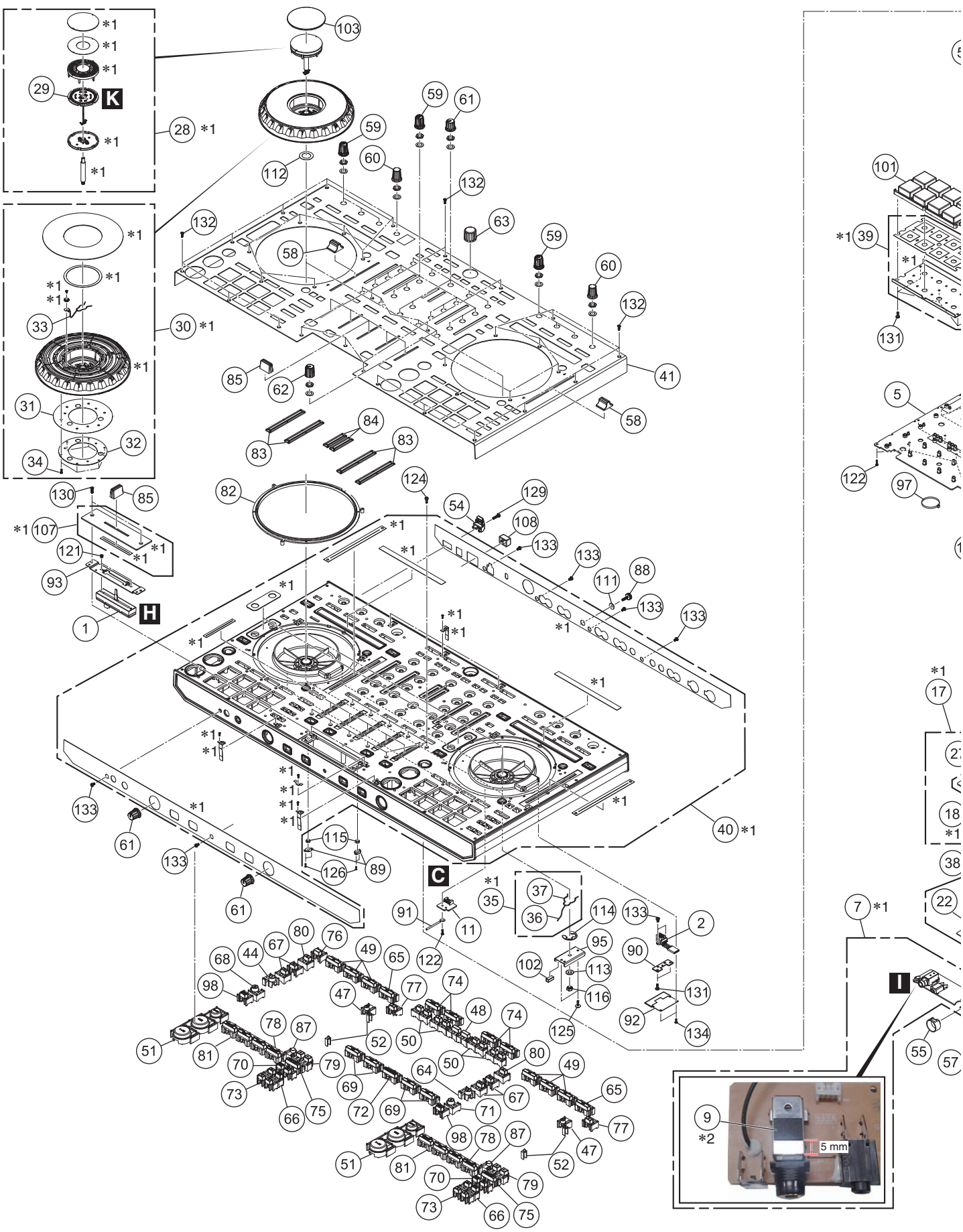

*1: The parts in a frame will be supplied as an Assy. Parts not numbered are non-service parts (NSPs).

*2: To ensure performance of the product and protection of the parts, these parts must be attached.

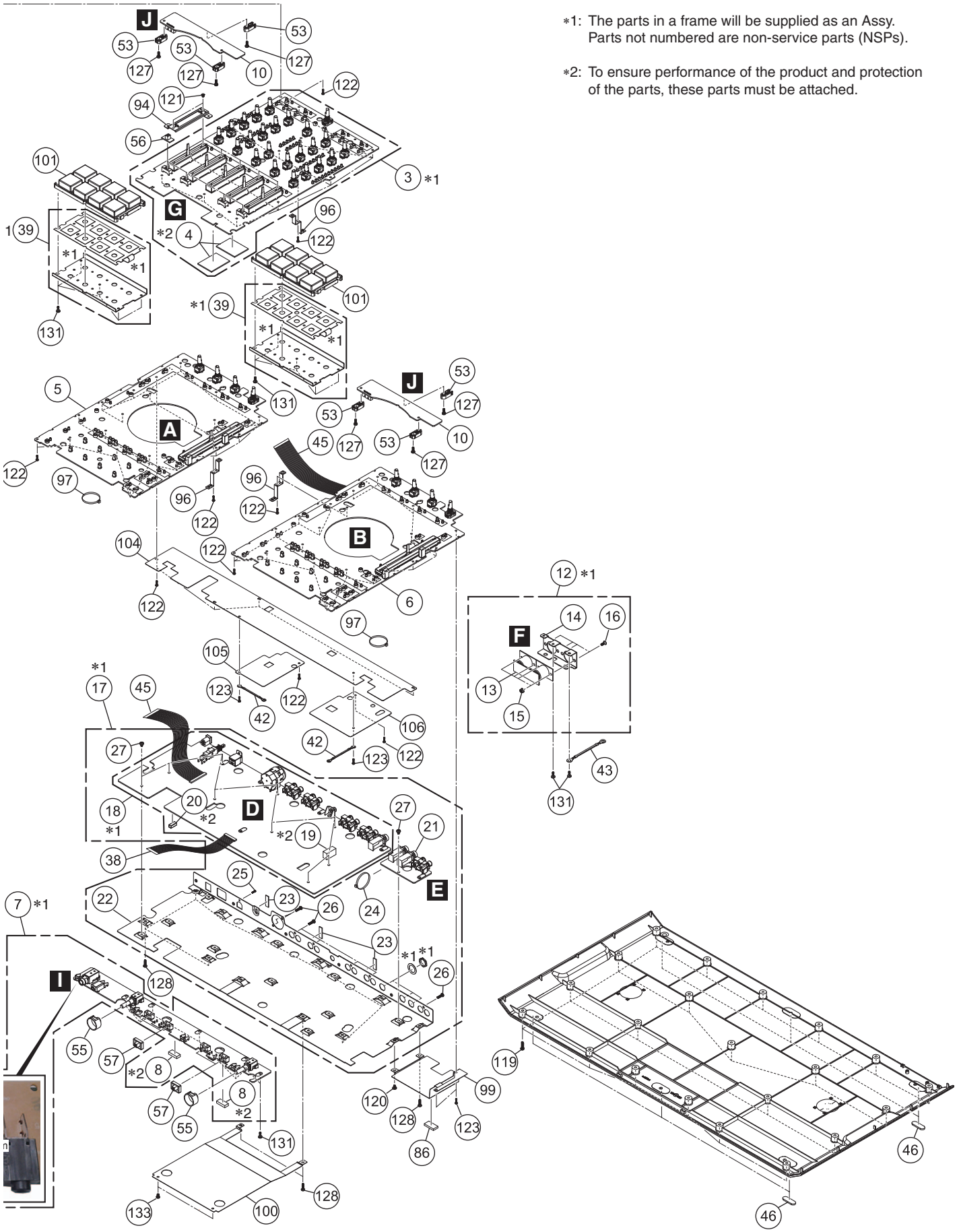

(1) EXTERIOR SECTION PARTS LIST

Mark	No.	Description	Part No.
	1	CR FADER PCB Assy	704-EN1000-9788
	2	SENSOR PCB Assy	704-PDJ33-A007-HA
	3	1..MIX PCB Assy	704-S1MK2-B091
	4*2	2..Spacer (40*30*1.5)	612-SX2-450
	5	CONTROL PCB Assy A	704-S1MK2-A953
	6	CONTROL PCB Assy B	704-S1MK2-A954
	7	1..FRONT PCB Assy	704-S1MK2-B092
	8*2	2..Spacer	612-SX2-459
	9*2	2..Spacer	501-MAIE-2451
	10	TOUCH PCB Assy	704-S1MK2-A957
	11	TRANSFER PCB Assy	704-S1MK2-A960
	12	1..BAL PCB & FIXED P. Assy	704-S1MK2-A986
	13	2..BAL. PCB Assy	704-S1MK2-A956
	14	2..XLR Fixed Plate	300-S1-2048-HA
	15	2..Nut M3 BLK + Gear Washer	601-R2150-033-HA
	16	2..Screw	602-HMD510B-198-HA
	17	1..I/O & FIX PLATE Assy	704-S1MK2-A985
	18	2..DSP PCB Assy	704-S1MK2-B090
	19*2	3..Cushion	612-SX2-362
	20*2	3..Sponge	612-DJFA-373-HA
	21	2..OUTPUT PCB Assy	704-S1MK2-A958
	22	2..Output Board	300-S1-2044A
	23	2..Sponge	612-F300-358-HA
	24	2..Cable Tie	504-S100-004
	25	2..Screw	602-HP1010K-181-HA
	26	2..Screw	602-MK7-131-HA
	27	2..Screw	602-SA12-378
	28	1..LED & COVER Assy	704-S1MK2-A961
	29	2..LED PCB Assy	704-S1MK2-A959
	30	1..WHEEL Assy	703-S1-1383-HA
	31	2..Encoder Plate	300-PROS2-848-HA
	32	2..Encoder Fixed Plate	300-PROS2-851-HA
	33	2..1P Lead Wire (L = 50mm)	406-S1-1232
	34	2..Screw	602-PROS2-363-HA
	35	1..Clip & Lead Wire Assy	704-S1-A586
	36	2..1P Lead Wire	406-S1-1231-HA
	37	2..Clip	603-S1-394-HA
	38	30P 1.0 FFC Cable (L = 120 mm)	406-S1MK2-1295
	39	PAD & FSR Assy	704-S1MK2-A962
	40	Chassis Assy (for Service)	See Contrast table (2)
	41	Top Panel Assy	703-SXMK2-1434
	42	1P Lead Wire (L = 55 mm)	406-S1MK2-1301
	43	1P Ground Wire (L = 40 mm)	406-8001-833
	44	Deck 1 Button	100-S1-2990-HA
	45	37P 1.0 FFC Cable (L = 190 mm)	406-S1MK2-1294
	46	Foot Mat	612-S1-445-HA
	47	Little Round Button	100-S1-2991-HA
	48	2 Key Button	100-S1-2992S-HA
	49	ON Button	100-S1-2993-HA
	50	1, 2 Button	100-S1-2994-HA
	51	PLAY SYNC Button	100-S1-2995-HA
	52	TEMPO Lens	100-S1-2998-HA
	53	Fixed Plate	100-S1-2999-HA
	54	Strain Relief Bush	100-S1-3000-HA
	55	VR Cover	100-S1-3002-HA
	56	CF Button	100-S1-3003-HA
	57	Button	100-S1-3004-HA
	58	Speed Push Button	100-S1-3005-HA
	59	FX Rotate Knob	100-S1-3006-HA
	60	BEAT Rotate Knob	100-S1-3007-HA
	61	GAIN Rotate Knob	100-S1-3008-HA
	62	FILTER Rotate Knob	100-S1-3009-HA
	63	BROWSER Rotate Knob	100-S1-3010-HA
	64	Deck 2 Button	100-S1A-2990-HA
	65	TAP Button	100-S1A-2993-HA
	66	IN/OUT Button	100-S1A-2994-HA
	67	CENSOR Button (-)	100-S1B-2989-HA
	68	Deck 3 Button	100-S1B-2990-HA
	69	CUE Button	100-S1B-2993-HA
	70	2X Button	100-S1B-2994-HA
	71	Deck 4 Button	100-S1C-2990-HA
	72	MASTER CUE Button	100-S1C-2993-HA
	73	Button	100-S1C-2994-HA
	74	LOAD Button	100-S1D-2993-HA
	75	AUTO LOOP Button	100-S1E-2993-HA
	76	Rectangular Button	100-SX-2989S-HA
	77	Key Lock Button	100-SX2-2989
	78	HOT CUE/ROLL Button	100-SX2-3156
	79	1, 2 Button	100-SX2-3159
	80	CENSOR Button	100-SX2A-2989

*2: To ensure performance of the product and protection of the parts, these parts must be attached.

Mark	No.	Description	Part No.
	81	HOT CUE/ROLL Button	100-SX2A-3156
	82	JW Ring	100-SXMK2-3152
	83	LM Lens	100-SXMK2-3154
	84	MASTER Lens	100-SXMK2-3155
	85	Push Button 1	100-SXMK2-3157
	86	Sponge	612-S1-461-HA
	87	Round Knob	100-SXMK2-3160
	88	Ground Terminal	200-S1-665-HA
	89	Fixed Cover	300-33-1918-HA
	90	Sensor Fixed Plate	300-HDJ9800-981-HA
	91	Winding Fixture	300-HM510B-224-HA
	92	Dust-Proof Slice	501-HDJ9800-1648-HA
	93	CF Fixed Plate	300-S1-2045-HA
	94	CH Fader Fixed Plate	300-S1-2046-HA
	95	JW LED Base	300-S1-2049A-HA
	96	Ground Plate	300-S1-2051-HA
	97	Cable Tie	504-S100-004-HA
	98	Shift Button	100-S1-2989-HA
	99	Cover	300-S1-2059-HA
	100	Isolation Plate	300-S1-2060-HA
	101	Velocity Soft Knob	604-SXMK2-651
	102	Sponge	612-DJFA-373-HA
	103	Windows Lens	100-S1-2985-HA
	104	Isolation Slice	501-S1-2542A
	105	MIC 1 Isolation Slice	501-SX2-2645
	106	MIC 2 Isolation Slice	501-SX2-2646
	107	CF Panel & Cushion Assy	703-SX2-1396
	108	Power Knob	100-HDJ2000-1641-HA
	109	•••••	
	110	•••••	
	111	Washer	606-S1-007-HA
	112	Washer	606-S1-261-HA
	113	Washer	606-DDJLE-260-HA
	114	E Type Washer	606-S1-262-HA
	115	Nut (M3*P0.5)	601-A100-004-HA
	116	Nut (M5,7.9*3.8mm, C1010)	601-MM1000-029-HA
	117	•••••	
	118	•••••	
	119	Screw	602-PTP3012-571-HA
	120	Screw	602-QMX2BPM-322-HA
	121	Screw	602-SA12-414-HA
	122	Screw	602-SL24F-099-HA
	123	Screw	602-CDN88-563
	124	Screw	602-2002-077-HA
	125	Screw	602-3113-122-HA
	126	Screw	602-A700-494-HA
	127	Screw	602-B600-057-HA
	128	Screw	602-B600-072-HA
	129	Screw	602-BTB3012-446B-HA
	130	Screw	602-CTF3010-698B-HA
	131	Screw	602-DJ5500-452-HA
	132	Screw	602-HP1010K-182-HA
	133	Screw	602-MP3-324-HA
	134	Screw	602-PROS2-363-HA

(2) CONTRAST TABLE

DDJ-SX2/SVYXE8, UXECB, FJKLPXE5 and AXE5 are constructed the same except for the following:

Mark	No.	Symbol and Description	DDJ-SX2 /SVYXE8	DDJ-SX2 /UXECB	DDJ-SX2 /FJKLPXE5	DDJ-SX2 /AXE5
	40	Chassis Assy (for Service)	705-SXMK2-1592	705-SXMK2-1592	705-SXMK2-1592	705-SXMK2D-1593