9. EXPLODED VIEWS AND PARTS LIST

NOTES:
- *Parts marked by "NSP" are generally unavailable because they are not in our Master Spare Parts List.*
- *The ⚠ mark found on some component parts indicates the importance of the safety factor of the part. Therefore, when replacing, be sure to use parts of identical designation.*
- *Screws adjacent to ▼ mark on product are used for disassembly.*
- *For the applying amount of lubricants or glue, follow the instructions in this manual. (In the case of no amount instructions, apply as you think it appropriate.)*

9.1 PACKING SECTION

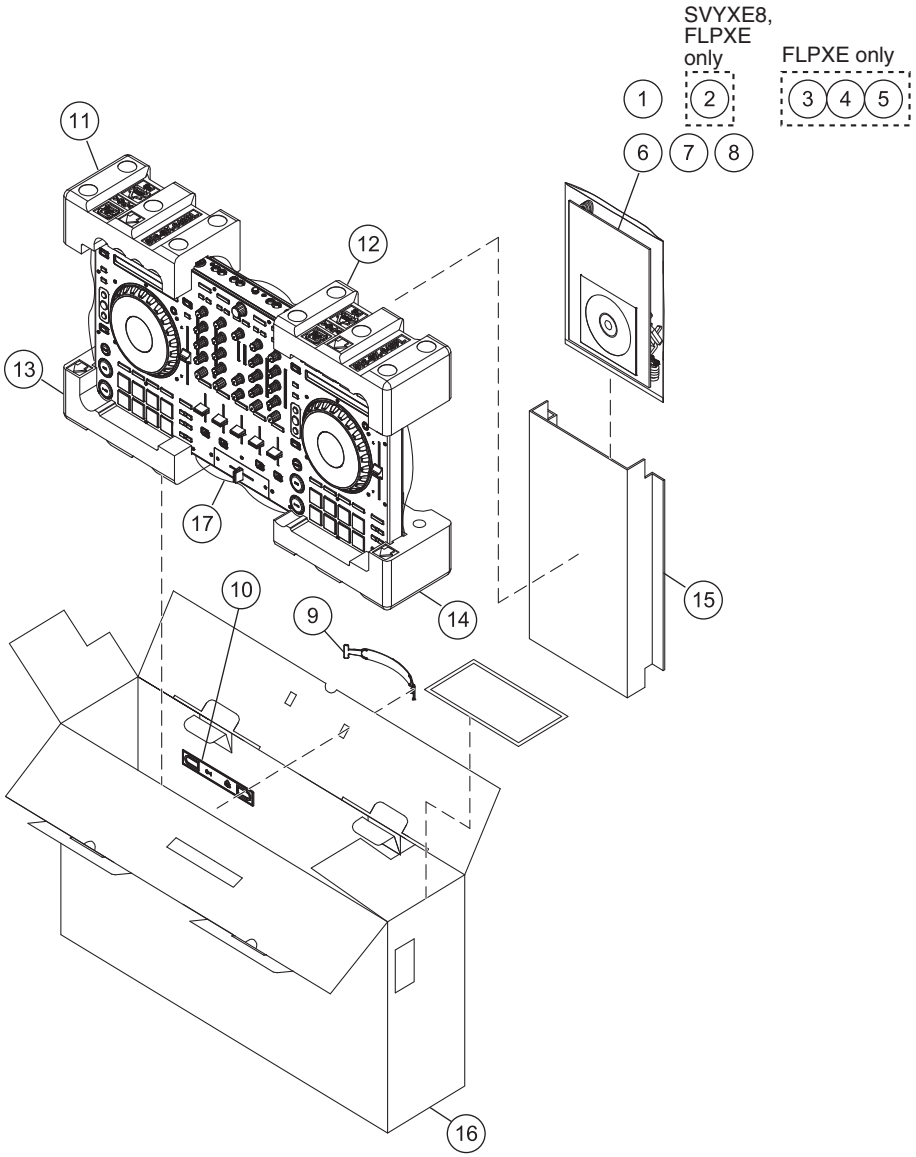

(1) PACKING SECTION PARTS LIST

Mark	No.	Description	Part No.
⚠	1	AC Adapter	See Contrast table (2)
⚠	2	Power Plug	See Contrast table (2)
⚠	3	Power Plug	See Contrast table (2)
⚠	4	Power Plug	See Contrast table (2)
⚠	5	Power Plug	See Contrast table (2)
	6	USB Cable	408-100UG-087-HA
	7	CD-ROM (Installation Disc)	429-S1-142-HA
	8	Read Before Use (Important)/ Quick Start Guide	See Contrast table (2)
	9	Handle	100-DDJLE-3012-HA
	10	Handle Base	100-DDJLE-3013-HA
	11	Polyfoam BL	506-SX-648BL-HA
	12	Polyfoam BR	506-SX-648BR-HA
	13	Polyfoam FL	506-SX-648FL-HA
	14	Polyfoam FR	506-SX-648FR-HA
	15	Paster board	507-S1-3372-HA
	16	Gift Box	See Contrast table (2)
	17	Soft Bag	509-DDJSX-320-HA

(2) CONTRAST TABLE

DDJ-SX/UXECB, SVYXE8, FLPXE, AXE5 and KXE5 are constructed the same except for the following:

Mark	No.	Symbol and Description	DDJ-SX /UXECB	DDJ-SX /SVYXE8	DDJ-SX /FLPXE	DDJ-SX /AXE5	DDJ-SX /KXE5
⚠	1	AC Adapter	411-S1-878-HA	411-S1-879-HA	411-S1-880-HA	411-S1-881-HA	411-S1-882-HA
⚠	2	Power Plug	Not used	420-DJM250-362-HA	420-DJM250-364-HA	Not used	Not used
⚠	3	Power Plug	Not used	Not used	420-DJM250-363-HA	Not used	Not used
⚠	4	Power Plug	Not used	Not used	420-DJM250-362-HA	Not used	Not used
⚠	5	Power Plug	Not used	Not used	420-DJM250-361-HA	Not used	Not used
	8	Read Before Use (Important)/ Quick Start Guide (En)	502-DDSXA-3277-HA	Not used	Not used	Not used	Not used
	8	Read Before Use (Important)/ Quick Start Guide (En, Fr, De, It, Es, Po, Py)	Not used	502-DDSXB-3278-HA	Not used	Not used	Not used
	8	Read Before Use (Important)/ Quick Start Guide (En)	Not used	Not used	502-DDSXF-3282-HA	Not used	Not used
	8	Read Before Use (Important)/ Quick Start Guide (Zhcn)	Not used	Not used	Not used	502-DDSXD-3280-HA	Not used
	8	Read Before Use (Important)/ Quick Start Guide (Ko)	Not used	Not used	Not used	Not used	502-DDSXE-3281-HA
	16	Gift Box	507-S1-3370A-HA	507-SXB-3370A-HA	507-SXF-3370A-HA	507-SXD-3370-HA	507-SXE-3370-HA

9.2 EXTERIOR SECTION

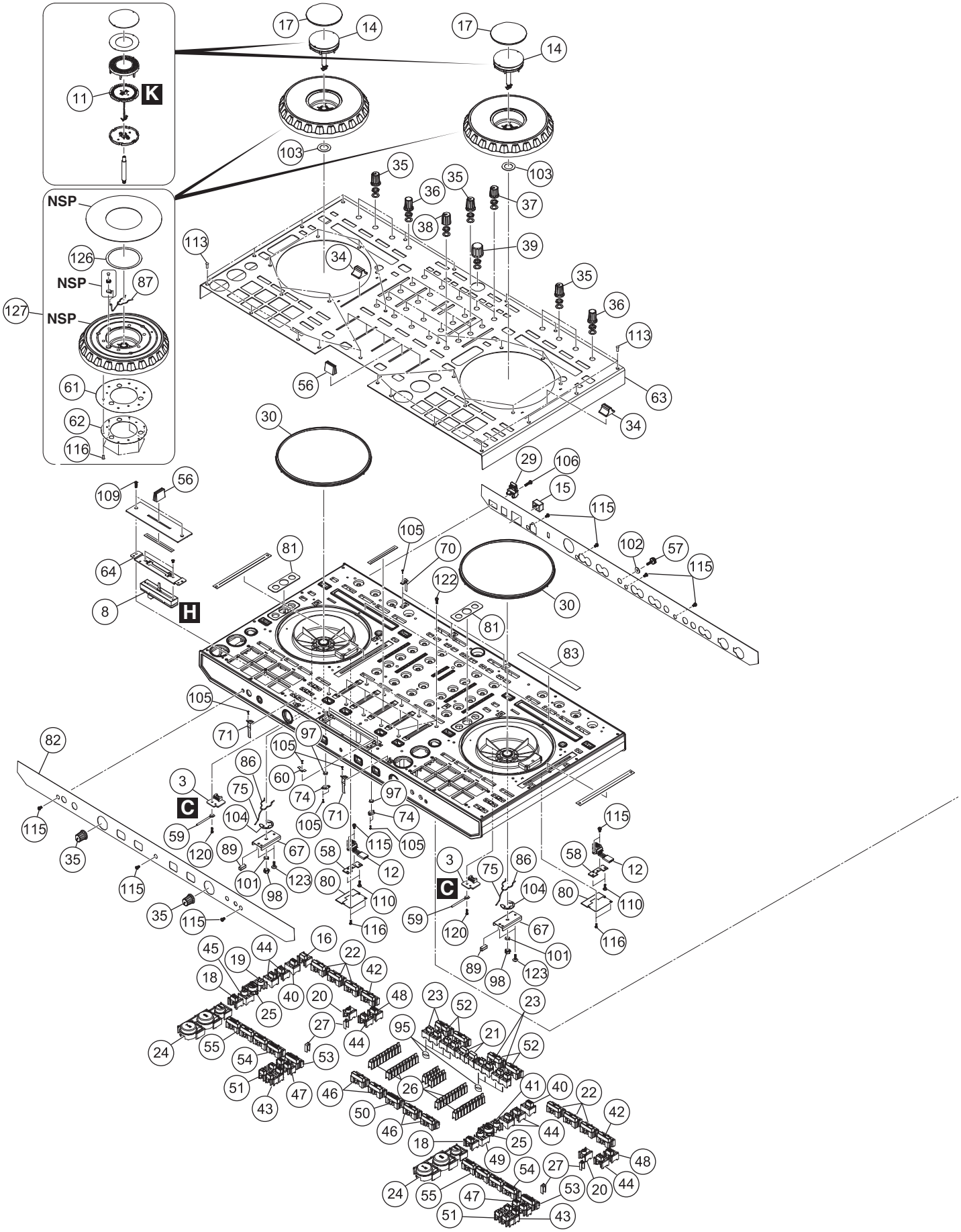

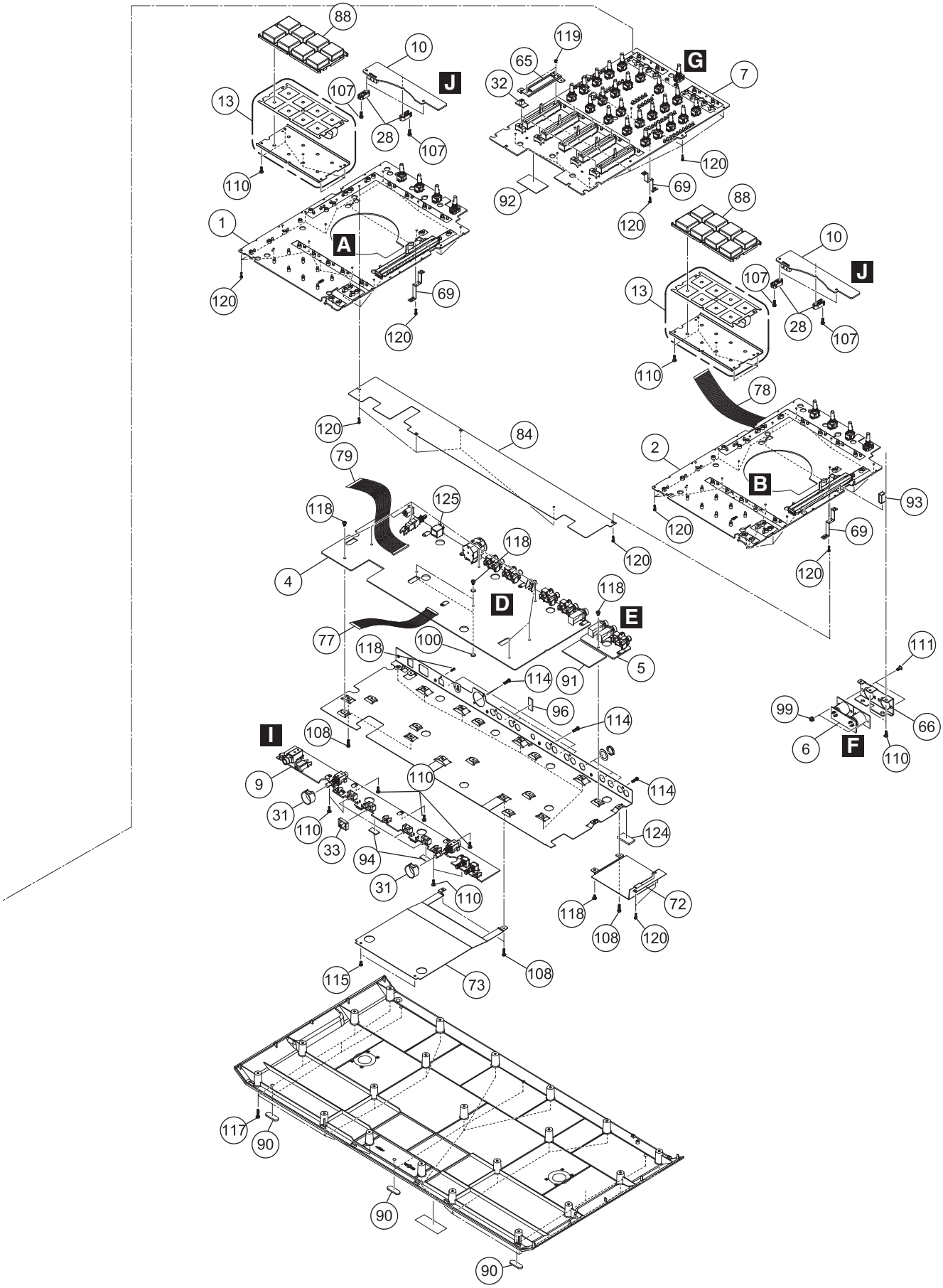
88
10
J
13
107
28
107
110
1
A
120
69
120
119
65
32
G
7
120
92
69
120
88
10
J
13
107
28
107
110
78
120
84
2
B
93
120
69
120
79
125
118
118
4
120
118
D
E
77
100
118
5
91
114
96
114
108
I
9
110
31
110
33
94
31
110
114
124
72
118
108
120
115
73
108
111
99
66
6
F
110
117
90
90
90

EXTERIOR SECTION PARTS LIST

Mark	No.	Description	Part No.
	1	CONTROL PCB Assy A	704-DDJS1-A421-HA
	2	CONTROL PCB Assy B	704-DDJS1-A454-HA
	3	TRANSFER PCB Assy	704-DDJS1-A429-HA
	4	DSP PCB Assy	704-DDJS1-A418-HA
	5	OUTPUT PCB Assy	704-DDJS1-A425-HA
	6	BAL. PCB Assy	704-DDJS1-A423-HA
	7	MIX PCB Assy	704-DDJS1-A417-HA
	8	CH FADER PCB Assy	704-DJM250-A032-HA
	9	FRONT PCB Assy	704-DDJS1-A424-HA
	10	TOUCH PCB Assy	704-DDJS1-A426-HA
	11	LED PCB Assy	704-DDJS1-A422-HA
	12	SENSOR PCB Assy	704-PDJ33-A007-HA
	13	PAD & FSR Assy	704-S1-A458-HA
	14	LED & COVER Assy	704-DDJS1-A455-HA
	15	Power Knob	100-HDJ2000-1641-HA
	16	Rectangular Button	100-SX-2989S-HA
	17	Windows Lens	100-S1-2985-HA
	18	SHIFT Button	100-S1-2989-HA
	19	DECK 1 Button	100-S1-2990-HA
	20	LITTLE ROUND Button	100-S1-2991-HA
	21	2 Key Button	100-S1-2992S-HA
	22	ON Button	100-S1-2993-HA
	23	1,2 Button	100-S1-2994-HA
	24	PLAY SYNC Button	100-S1-2995-HA
	25	DUAL DECK Button	100-S1-2996-HA
	26	LM Lens	100-S1-2997-HA
	27	Tempo Lens	100-S1-2998-HA
	28	Fixed Plate	100-S1-2999-HA
	29	Strain Relief Bush	100-S1-3000-HA
	30	JW Ring	100-S1-3001-HA
	31	VR Cover	100-S1-3002-HA
	32	CF Button	100-S1-3003-HA
	33	Button	100-S1-3004-HA
	34	SPEED PUSH Button	100-S1-3005-HA
	35	FX Rotate Knob	100-S1-3006-HA
	36	Beat Rotate Knob	100-S1-3007-HA
	37	Gain Rotate Knob	100-S1-3008-HA
	38	Filter Rotate Knob	100-S1-3009-HA
	39	Browser Rotate Knob	100-S1-3010-HA
	40	CENSOR Button	100-S1A-2989-HA
	41	DECK 2 Button	100-S1A-2990-HA
	42	TAP Button	100-S1A-2993-HA
	43	IN/OUT Button	100-S1A-2994-HA
	44	CENSOR Button (-)	100-S1B-2989-HA
	45	DECK 3 Button	100-S1B-2990-HA

Mark	No.	Description	Part No.
	46	CUE Button	100-S1B-2993-HA
	47	2X Button	100-S1B-2994-HA
	48	VINYL Button	100-S1C-2989-HA
	49	DECK 4 Button	100-S1C-2990-HA
	50	MASTER CUE Button	100-S1C-2993-HA
	51	Button	100-S1C-2994-HA
	52	LOAD Button	100-S1D-2993-HA
	53	AUTO LOOP Button	100-S1E-2993-HA
	54	S.S Button	100-S1F-2993-HA
	55	H.R Button	100-S1G-2993-HA
	56	Push Button	100-22-2824-HA
	57	Ground Terminal	200-S1-665-HA
	58	Sensor Fixed Plate	300-HDJ9800-981-HA
	59	Winding Fixture	300-HM510B-224-HA
	60	Ground Plate	300-MX200-1743-HA
	61	Encoder Plate	300-PROS2-848-HA
	62	Encoder Fixed Plate	300-PROS2-851-HA
	63	Front Panel	300-S1-2043-HA
	64	CF Fixed Plate	300-S1-2045-HA
	65	CH Fader Fixed Plate	300-S1-2046-HA
	66	XLR Fixed Plate	300-S1-2048-HA
	67	JW LED Base	300-S1-2049-HA
	68	••••	
	69	Ground Plate	300-S1-2051-HA
	70	Ground Plate	300-S1-2057-HA
	71	Ground Plate	300-S1-2058-HA
	72	Cover	300-S1-2059-HA
	73	Isolation Plate	300-S1-2060-HA
	74	Fixed Cover	300-33-1918-HA
	75	1P Lead Wire	406-S1-1231-HA
	76	••••	
	77	30P 1.0 FFC Cable	406-S1-1233-HA
	78	37P 1.0 FFC Cable	406-S1-1234-HA
	79	37P 1.0 FFC Cable	406-S1-1235-HA
	80	Dust-Proof Slice	501-HDJ9800-1648-HA
	81	Deck Panel	501-S1-2521-HA
	82	Front Panel	501-S1-2522-HA
	83	Search Panel	501-S1-2524-HA
	84	Isolation Slice	501-S1-2542-HA
	85	••••	
	86	Clip (1mm)	603-S1-394-HA
	87	Clip	603-S1-395-HA
	88	Velocity Soft Knob	604-S1-608-HA
	89	Sponge	612-DJFA-373-HA
	90	Foot Mat	612-S1-445-HA

Mark	No.	Description	Part No.
	91	Cushion	612-S1-449-HA
	92	Cushion	612-S1-450-HA
	93	Sponge (8*6*18mm)	612-S1-451-HA
	94	Cushion	612-S1-459-HA
	95	Shade Cover	505-S1-243-HA
	96	Sponge	612-F300-358-HA
	97	Nut (M3*P0.5,CD,PB,HH)	601-A100-004-HA
	98	Nut (M5,7.9*3.8MM)	601-MM1000-029-HA
	99	Nut BLK+Gear Washer	601-R2150-033-HA
	100	Washer	606-KMD280-081-HA
	101	Washer	606-DDJLE-260-HA
	102	Washer (10*3.2*1T)	606-S1-007-HA
	103	Washer	606-S1-261-HA
	104	E Type Washer	606-S1-262-HA
	105	Screw (TTB,2*5,MC)	602-A700-494-HA
	106	Screw	602-BTB3012-446B-HA
	107	Screw (SAE1018PTP3*8)	602-B600-057-HA
	108	Screw	602-B600-072-HA
	109	Screw (CTF,M3*10)	602-CTF3010-698B-HA
	110	Screw	602-DJ5500-452-HA
	111	Screw (M3*8)	602-HMD510B-198-HA
	112	Screw (M2*P0.4*L6)	602-HP1010K-181-HA
	113	Screw	602-HP1010K-182-HA
	114	Screw	602-MK7-131-HA
	115	Screw	602-MP3-324-HA
	116	Screw	602-PROS2-363-HA
	117	Screw (TTP,3*L12)	602-PTP3012-571-HA
	118	Screw	602-QMX2BPM-322-HA
	119	Screw	602-SA12-414-HA
	120	Screw (2.6*8 TTP)	602-SL24F-099-HA
	121	••••	
	122	Screw (3*8MM TTB)	602-2002-077-HA
	123	Screw (3*10M/M)	602-3113-122-HA
	124	Sponge	612-S1-461-HA
	125	USB Fixed Plate	300-S1-2069-HA
	126	Twin Adhesive	501-S1-2526-HA
	127	Wheel Assy	704-S1-1383-HA