9. EXPLODED VIEWS AND PARTS LIST

NOTES:
- *Parts marked by "NSP" are generally unavailable because they are not in our Master Spare Parts List.*
- *The ⚠ mark found on some component parts indicates the importance of the safety factor of the part. Therefore, when replacing, be sure to use parts of identical designation.*
- *Screws adjacent to ▼ mark on product are used for disassembly.*
- *For the applying amount of lubricants or glue, follow the instructions in this manual. (In the case of no amount instructions, apply as you think it appropriate.)*

9.1 PACKING SECTION

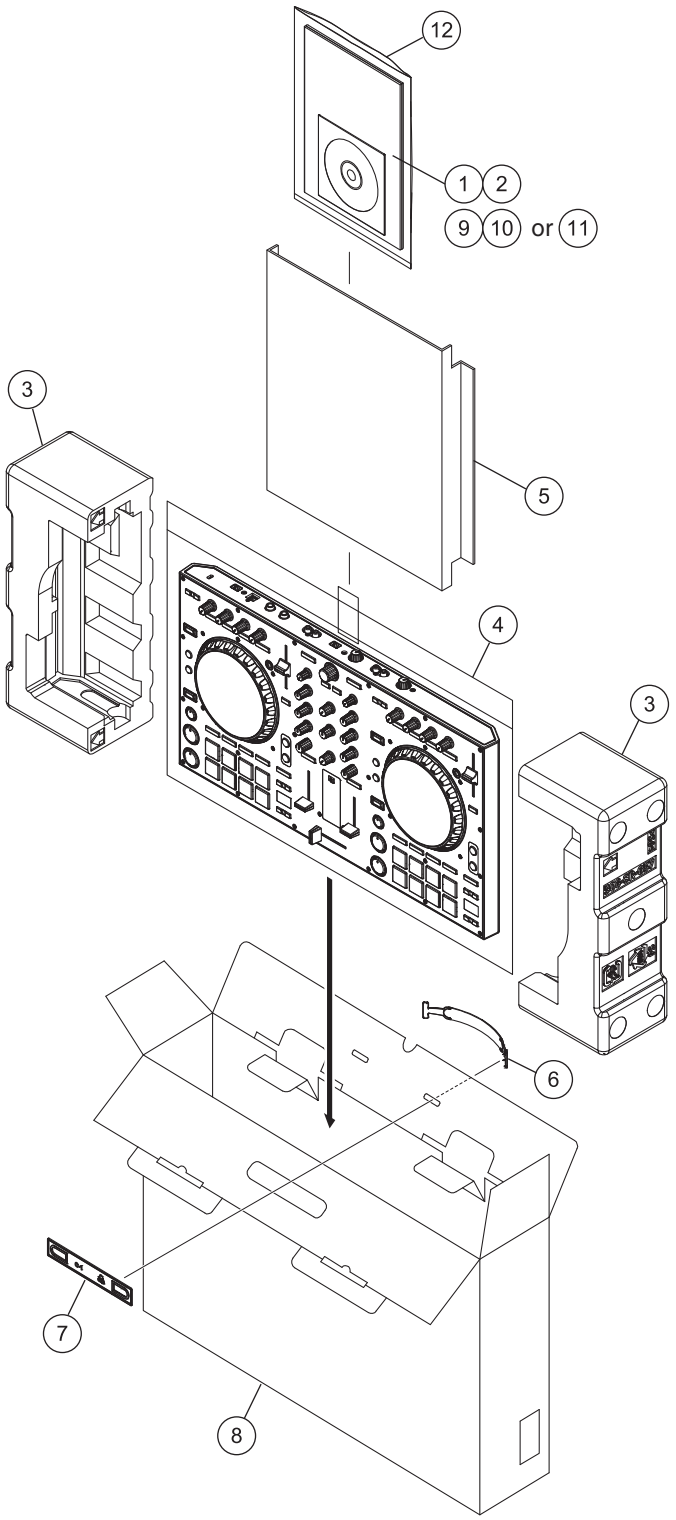

(1) PACKING SECTION PARTS LIST

Mark	No.	Description	Part No.
	1	USB Cable (L = 1500 mm)	408-SUB-132
	2	CD-ROM (Installation Disc)	••••• (To Be Determined)
	3	Polyfoam	506-SR-657
	4	Soft Bag	509-SR-328
	5	Paster Board	507-SR-3440
	6	Handle	100-SX-3017
	7	Handle Base	100-SX-3018
	8	Gift Box	See Contrast table (2)
	9	Read Before Use (Important)/ Quick Start Guide	See Contrast table (2)
	10	Read Before Use (Important)/ Quick Start Guide	See Contrast table (2)
	11	Read Before Use (Important)/ Quick Start Guide	See Contrast table (2)
	12	PE Bag	505-DJM250-014

(2) CONTRAST TABLE

DDJ-SR/CKSUVYXE5 and XECN5 are constructed the same except for the following:

Mark	No.	Symbol and Description	DDJ-SR /CKSUVYXE5	DDJ-SR /XECN5
	8	Gift Box	507-SRA-3449A	507-SRB-3449
	9	Read Before Use (Important)/Quick Start Guide (En, Fr, De, It, Nl)	502-DDJSRA-3325A	Not used
	10	Read Before Use (Important)/Quick Start Guide (Es, Pt, Ru, Ko, Ja)	502-DDJSRA-3326A	Not used
	11	Read Before Use (Important)/Quick Start Guide (Zhcn)	Not used	502-DDJSRB-3327

9.2 EXTERIOR SECTION

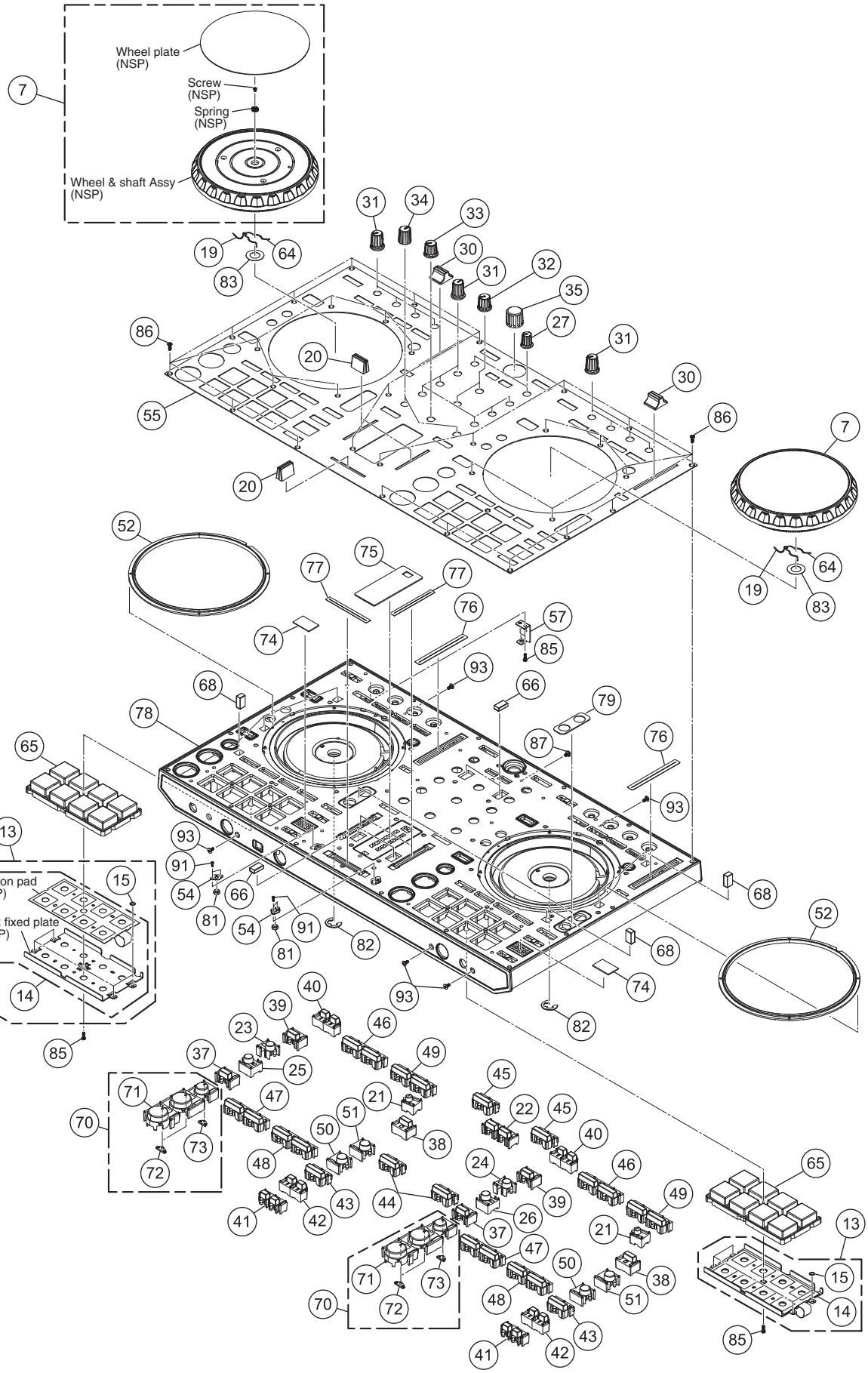

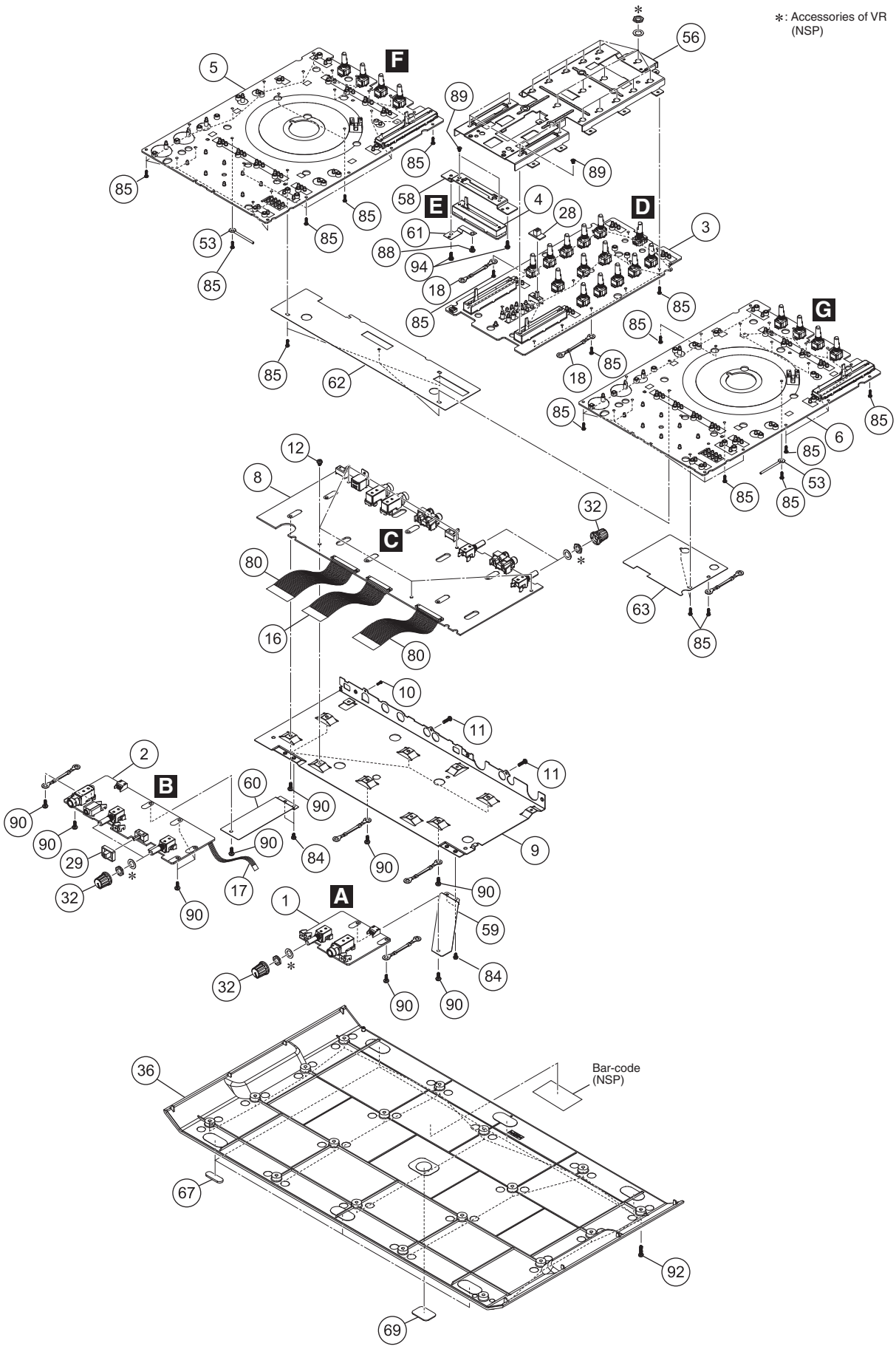
∗: Accessories of VR (NSP)
Bar-code (NSP)

(1) EXTERIOR SECTION PARTS LIST

Mark	No.	Description	Part No.
	1	MIC PCB Assy	704-SR-A601
	2	HEADPHONE PCB Assy	704-SR-A600
	3	MIXER PCB Assy	704-SR-A597
	4	CROSS FADER PCB Assy	704-DJM250-A032
	5	PANEL-L PCB Assy	704-SR-A599
	6	PANEL-R PCB Assy	704-SR-A598
	7	Wheel Assy	701-SR-5350
	8	I/O PCB Assy	704-SR-A596
	9	Output Board	300-SR-2089
	10	Screw	602-HP1010K-181
	11	Screw	602-MK7-131
	12	Screw	602-QMX2BPM-322N
	13	1..Pad & FSR Plate Assy kit	GXX1374
	14	2..Pad & FSR Plate Assy	704-SR-A629
	15	2..Washer	606-SR-270
	16	30P 1.0 FFC Cable	406-SR-1259
	17	5P 1.0 FFC Cable	406-SR-1260
	18	1P Ground Wire (L=70 mm)	406-SR-1267
	19	1P Lead Wire	406-S1-1231
	20	Push Button	100-22-2824
	21	Little Round Button	100-S1-2991
	22	2 Key Button	100-S1-2992S
	23	Deck 1 Button	100-S1-2990
	24	Deck 2 Button	100-S1A-2990
	25	Deck 3 Button	100-S1B-2990
	26	Deck 4 Button	100-S1C-2990
	27	Jog Tuning Knob	100-DDJLE-2944
	28	CF Button	100-S1-3003
	29	Button	100-S1-3004
	30	Speed Push Button	100-S1-3005
	31	FX Rotate Knob	100-S1-3006
	32	Gain Rotate Knob	100-S1-3008
	33	Gain Rotate Knob	100-SR-3008
	34	Filter Rotate Knob	100-S1-3009
	35	Browser Rotate Knob	100-S1-3010
	36	Base	See Contrast table (2)
	37	Shift Button	100-SHIFT-3053
	38	Rectangular Button	100-SR-3053
	39	Vinyl Button	100-VINYL-3053
	40	1/2 Button	100-12-3054
	41	Rectangular Button	100-DJSR-3054
	42	-/- Button	100-SR-3054
	43	Auto Button	100-AUTO-3055
	44	Cue Button	100-CUE-3055
	45	Load Button	100-LOAD-3055

Mark	No.	Description	Part No.
	46	On/On Button	100-ON-3055
	47	Hot Cue/Roll Button	100-ROLL-3055
	48	Slice/Sampler Button	100-SLICER-3055
	49	On/Tap Button	100-TAP-3055
	50	On Button	100-ON-3056
	51	Tap Hold Button	100-TAP-3056
	52	JW Ring	100-SR-3060
	53	Locking Cable Clip	300-HM510B-224
	54	Fixed Cover	300-33-1918
	55	Front Panel	300-SR-2086
	56	Mixer Fixed Plate	300-SR-2088
	57	K Lock Plate	300-SR-2091
	58	CF Fixed Plate	300-SR-2102
	59	MIC Ground Plate	300-SR-2104
	60	Phone Ground Plate	300-SR-2105
	61	CF Ground Plate	300-SR-2106
	62	FFC Isolation Slice	501-SR-2589
	63	MIC Isolation Slice	501-SR-2590
	64	Spring	603-C304-335
	65	Velocity Soft Knob	604-SR-618
	66	Sponge	612-4MIX-416
	67	Foot Mat	612-S1-445
	68	Sponge (8*6*18 mm)	612-S1-451
	69	Square Pad	612-SR-478
	70	1..Play Button Assy	701-DDJSR-5397
NSP	71	2..Play Sync Button	100-SR-3057
NSP	72	2..Lens	100-SR-3058
NSP	73	2..Little Lens	100-SR-3063
	74	Numeral Lens	501-SR-2574
	75	LM Lens	501-SR-2575
	76	VR Cushion	612-HDJ7000-056A
	77	VR Cushion	612-IM-296
	78	Chassis Assy	701-DDJSR-5398
	79	Quant Lens	501-SR-2573
	80	34P 1.0 FFC Cable	406-SR-1258
	81	Nut	601-A100-004
	82	E Ring	606-C304-209
	83	Washer (20*11*0.25T)	606-C304-210
	84	Screw	602-B300-041
	85	Screw	602-SL24F-099
	86	Screw	602-HP1010K-182
	87	Screw	602-QMX2BPM-322
	88	Screw	602-QMX2BPM-322N
	89	Screw	602-SA12-414
	90	Screw	602-DJ5500-452
	91	Screw	602-A700-494
	92	Screw	602-PTP3012-571
	93	Screw	602-ST306-728B
	94	Screw	602-SW3008-737B

(2) CONTRAST TABLE

DDJ-SR/CKSUVYXE5 and XECN5 are constructed the same except for the following:

Mark	No.	Symbol and Description	DDJ-SR /CKSUVYXE5	DDJ-SR /XECN5
	36	Base	100-SRA-3052	100-SRB-3052