9. EXPLODED VIEWS AND PARTS LIST

NOTES:
- *Parts marked by "NSP" are generally unavailable because they are not in our Master Spare Parts List.*
- *The ⚠ mark found on some component parts indicates the importance of the safety factor of the part. Therefore, when replacing, be sure to use parts of identical designation.*
- *Screws adjacent to ▼ mark on product are used for disassembly.*
- *For the applying amount of lubricants or glue, follow the instructions in this manual. (In the case of no amount instructions, apply as you think it appropriate.)*

9.1 PACKING SECTION

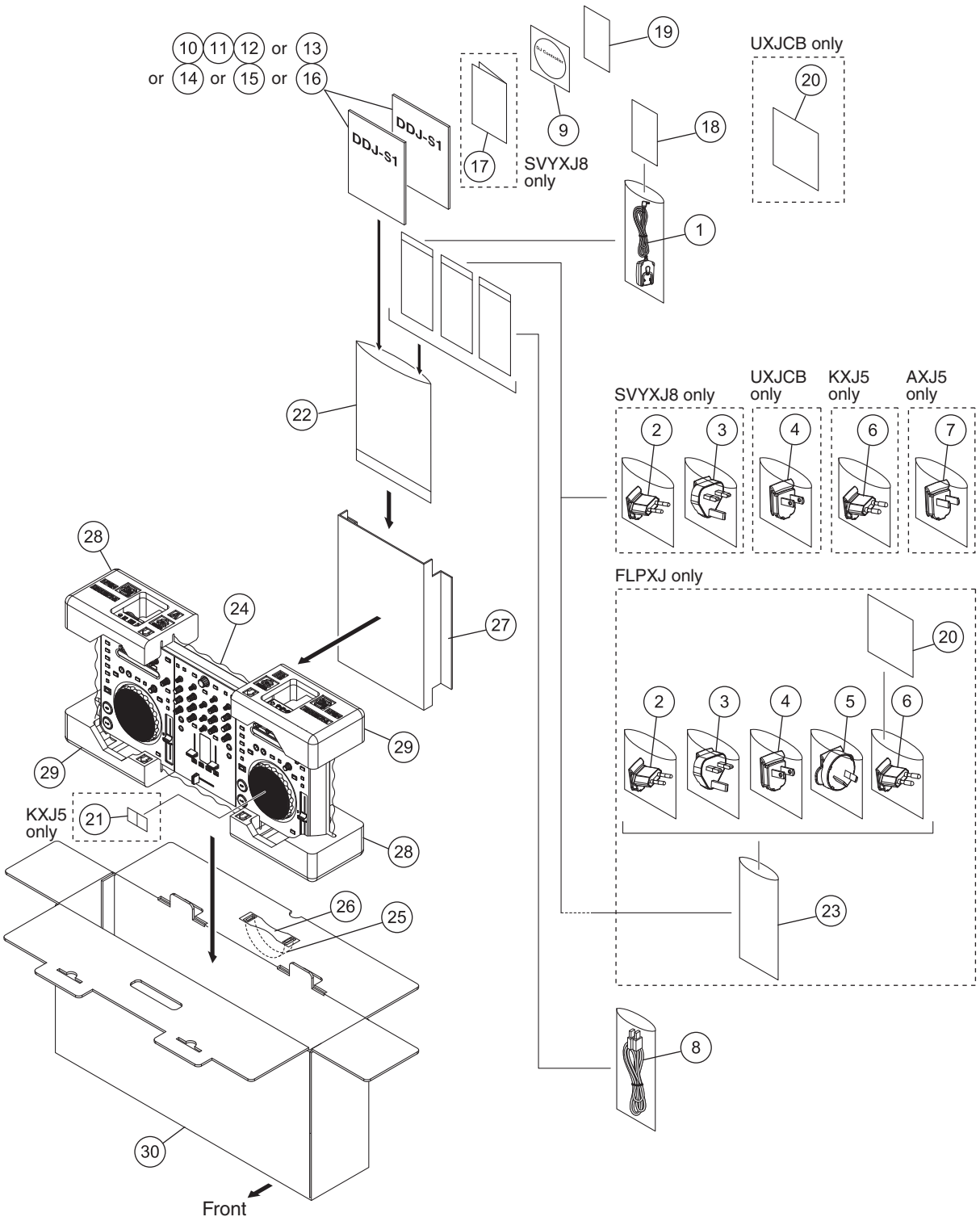

(1) PACKING SECTION PARTS LIST

Mark	No.	Description	Part No.
⚠	1	AC Adapter	DWR1491
⚠	2	Power Plug (EU)	See Contrast table (2)
⚠	3	Power Plug (UK)	See Contrast table (2)
⚠	4	Power Plug (US)	See Contrast table (2)
⚠	5	Power Plug (AUS)	See Contrast table (2)
⚠	6	Power Plug (KO)	See Contrast table (2)
⚠	7	Power Plug (CHI)	See Contrast table (2)
	8	USB Cable	DDE1128
	9	CD-ROM	DXX2662
	10	Operating Instructions	See Contrast table (2)
	11	Operating Instructions	See Contrast table (2)
	12	Operating Instructions	See Contrast table (2)
	13	Operating Instructions	See Contrast table (2)
	14	Operating Instructions	See Contrast table (2)
	15	Operating Instructions	See Contrast table (2)
	16	Operating Instructions	See Contrast table (2)
NSP	17	Warranty Card	See Contrast table (2)
	18	Caution Card/ADP	DRM1345
	19	Caution Card/VUP	DRM1355
	20	Caution Card/PLG	See Contrast table (2)
	21	Recycle Label (M)	See Contrast table (2)
NSP	22	Polyethylene Bag	AHG7117
	23	Vinyl Bag	See Contrast table (2)
	24	Packing Sheet	RHC1023
	25	Plastic Handle (PE)	VEC2292
	26	Spacer (PE)	VEC2293
	27	Accessary Pad	DHA1875
	28	Pad A	DHA1871
	29	Pad B	DHA1872
	30	Packing Case	See Contrast table (2)

(2) CONTRAST TABLE

DDJ-S1/SVYXJ8, UXJCB, FLPXJ, KXJ5 and AXJ5 are constructed the same except for the following:

Mark	No.	Symbol and Description	DDJ-S1 /SVYXJ8	DDJ-S1/ UXJCB	DDJ-S1/ FLPXJ	DDJ-S1/ KXJ5	DDJ-S1/ AXJ5
⚠	2	Power Plug (EU)	DKX1048	Not used	Not used	Not used	Not used
⚠	3	Power Plug (UK)	DKX1049	Not used	Not used	Not used	Not used
⚠	4	Power Plug (US)	Not used	DKX1047	DKX1047	Not used	Not used
⚠	5	Power Plug (AUS)	Not used	Not used	DKX1050	Not used	Not used
⚠	6	Power Plug (KO)	Not used	Not used	DKX1051	DKX1051	Not used
⚠	7	Power Plug (CHI)	Not used	Not used	Not used	Not used	DKX1052
	10	Operating Instructions (En/Fr/De)	DRB1552	Not used	Not used	Not used	Not used
	11	Operating Instructions (It/Nl/Es/Ru)	DRB1553	Not used	Not used	Not used	Not used
	12	Operating Instructions (?????)	DRB1566	Not used	Not used	Not used	Not used
	13	Operating Instructions (En)	Not used	DRB1551	Not used	Not used	Not used
	14	Operating Instructions (En/Es/Zhtw)	Not used	Not used	DRB1554	Not used	Not used
	15	Operating Instructions (Ko)	Not used	Not used	Not used	DRB1556	Not used
	16	Operating Instructions (Zhcn/En)	Not used	Not used	Not used	Not used	DRB1555
NSP	17	Warranty Card	ARY7107	Not used	Not used	Not used	Not used
	20	Caution Card/PLG	Not used	Not used	DRM1346	Not used	Not used
	21	Recycle Label (M)	Not used	Not used	Not used	DRW2307	Not used
	23	Vinyl Bag	Not used	Not used	Z21-013	Not used	Not used
	30	Packing Case	DHG3012	DHG3013	DHG3014	DHG3017	DHG3015

9.2 EXTERIOR SECION

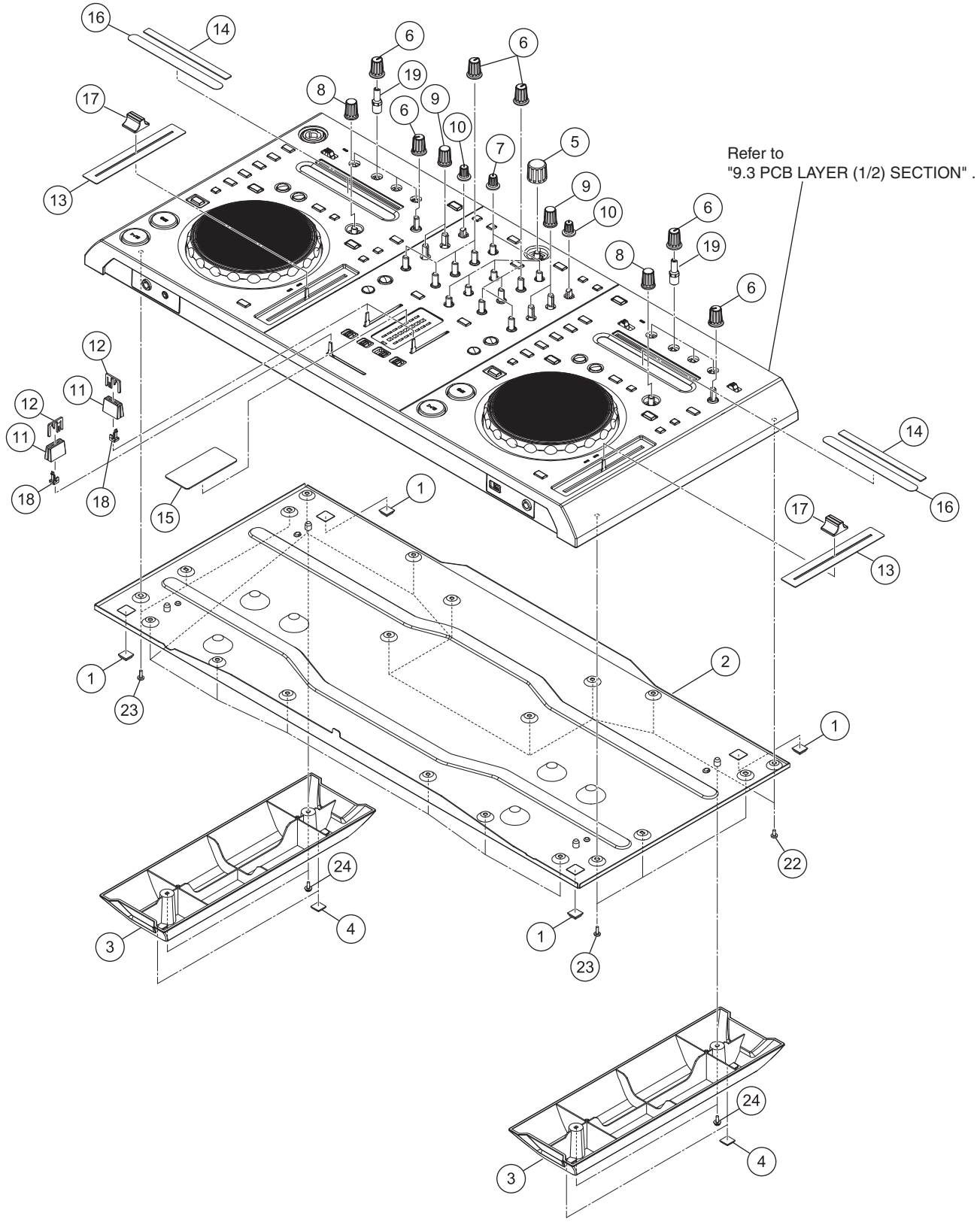

EXTERIOR SECION SECTION PARTS LIST

Mark	No.	Description	Part No.
	1	Rubber Foot (H6)	DEB1996
	2	Chassis CU	DNA1425
	3	Foot	DNK5864
	4	Rubber Foot	VEB1349
	5	Dial Knob	DAA1259
	6	Rotary Knob L (Black)	DAA1261
	7	Rotary Knob S (Black)	DAA1262
	8	Dial Knob S (B)	DAA1273
	9	Dial Knob S2 (B)	DAA1274
	10	Rotary Knob S2 (B)	DAA1275
	11	Slider Knob 1	DAC2684
	12	Slider Knob 2	DAC2685
	13	Slide Sheet 1C	DAH2404
	14	Address Plate	DAH2849
	15	Level Plate	DAH2851
	16	CDC Sheet	DEC3357
	17	Slide Knob (Metal)	DNK5876
	18	Slider Knob Stopper	DNK5888
	19	Shaft/EXT	DNK5980
	20	•••••	
	21	•••••	
	22	Screw	BBZ30P060FTC
	23	Screw	BPZ30P080FNI
	24	Screw	PMB30P080FTB

9.3 PCB LAYER SECTION (1/2)

• Bottom view

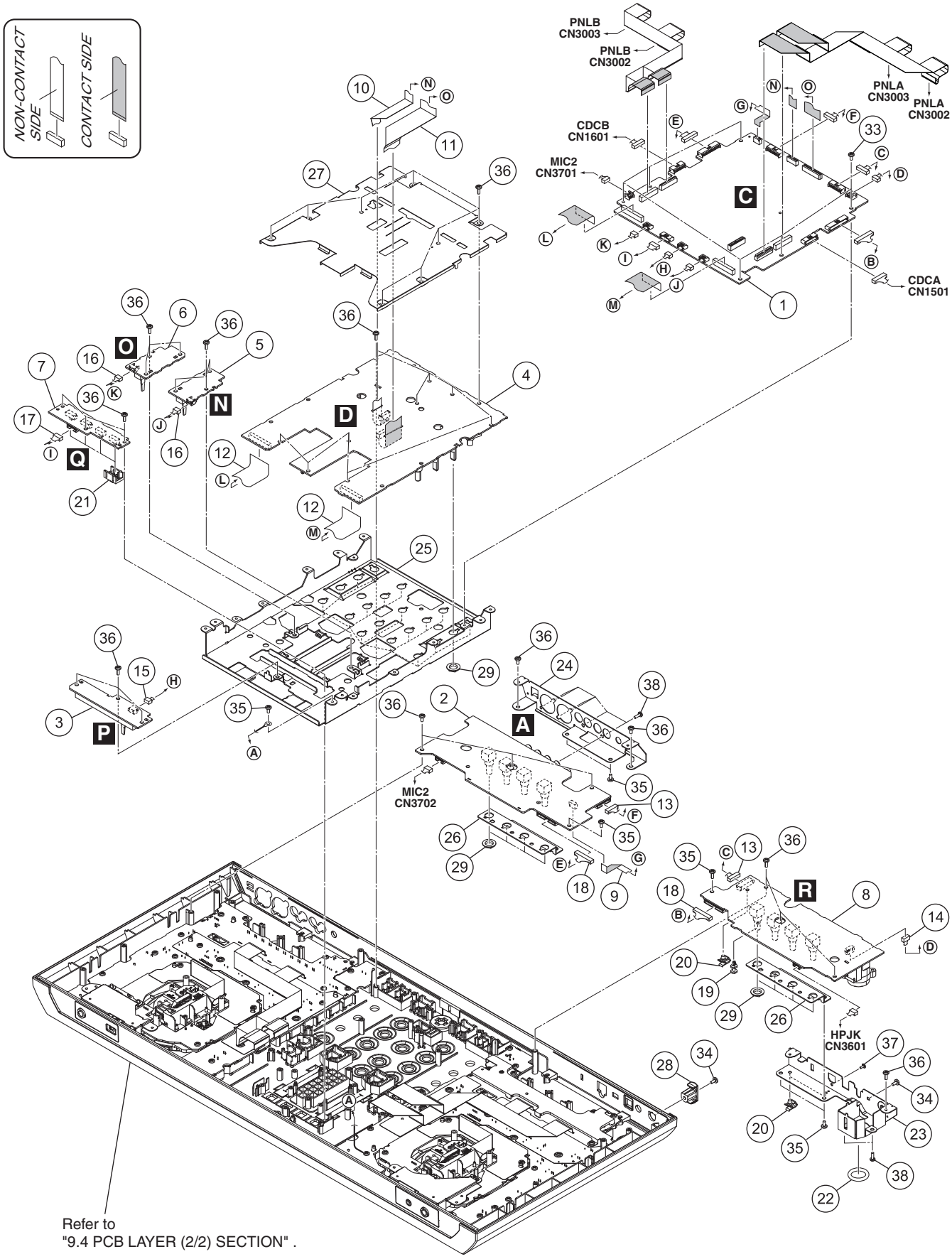

PCB LAYER SECTION (1/2) SECTION PARTS LIST

Mark	No.	Description	Part No.
	1	MAIN Assy	DWX3227
	2	JACK Assy	DWX3230
	3	CROS Assy	DWX3246
	4	DJMB Assy	DWX3243
	5	CHF1 Assy	DWX3244
	6	CHF2 Assy	DWX3245
	7	MSWB Assy	DWX3247
	8	POWB Assy	DWX3248
	9	FFC/6P	DDD1562
	10	FFC/11P	DDD1572
	11	FFC/23P	DDD1573
	12	FFC/27P	DDD1574
	13	Crimp Connector/9P	DKP3907
	14	Crimp Connector/4P	DKP3910
	15	Connector Assy	PF03PP-B05
	16	Connector Assy	PF03PP-B07
	17	Crimp Connector	PF06PP-B05
	18	Connector Assy	PF13PP-D07
NSP	19	PCB Spacer	AEC1371
	20	Mini Clamp	AEC7507
	21	Cap/FDR	DAC2771
	22	Blind/MIC	DEC3369
	23	Rear Stay L	DNH2969
	24	Rear Stay R	DNH2970
	25	VR Stay L	DNH2971
	26	VR Stay M	DNH2972
	27	Shield Plate/M	DNH2983
	28	Cord Hook	DNK5928
	29	Flange Nut M9	DBN1008
	30	•••••	
	31	•••••	
	32	•••••	
	33	Screw	ABZ30P060FTC
	34	Screw	BBZ30P060FTB
	35	Screw	BBZ30P060FTC
	36	Screw	BPZ30P080FNI
	37	Screw (M3*5)	DBA1340
	38	Screw	PPZ30P080FTB

9.4 PCB LAYER SECTION (2/2)

• Bottom view

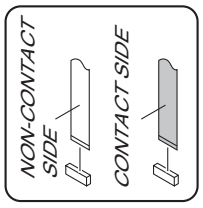

※
Either the CDCA Assy or CDCB Assy is assembled here.
The CDCA Assy and CDCB Assy are interchangeably used and handled similarly in their production management.

PCB LAYER SECTION (2/2) SECTION PARTS LIST

Mark	No.	Description	Part No.
	1	PNLA Assy	DWX3231
	2	PNLB Assy	DWX3237
	3	CDCA Assy	DWX3228
	4	CDCB Assy	DWX3229
	5	LEDB Assy	DWX3240
	6	HPJB Assy	DWX3241
	7	MIC2 Assy	DWX3242
	8	LODA Assy	DWX3249
	9	LODB Assy	DWX3250
	10	FFC/21P	DDD1566
	11	FFC/22P	DDD1567
	12	FFC/19P	DDD1568
	13	FFC/22P	DDD1569
NSP	14	Cord with Plug	DE005VF0
	15	Connector Assy	PF08PP-B10
	16	Crimp Connector	PF08PP2B20
	17	Crimp Connector/3P	DKP3908
	18	Crimp Connector/5P	DKP3909
	19	Crimp Connector/4P	DKP3911
	20	SW Cap	DAC2753
	21	Slide Sw Packing (B)	DEC2590
	22	FFC Guard A	DEC3358
	23	FFC Guard B	DEC3359
	24	FFC Guard J	DEC3361
	25	Slit/SV	DEC3368
	26	Front Stay L	DNH2959
	27	Front Stay R	DNH2960
	28	VR Stay S	DNH2964
	29	Shield Plate/A	DNH2979
	30	Lens	DNK5862
	31	CDC Stopper	DNK5863
	32	Cord Clamper (Steel)	RNH-184
	33	Flange Nut M9	DBN1008
	34	Nut M12	DBN1018
	35	•••••	
	36	•••••	
	37	Screw	BBZ30P060FTC
	38	Screw	BPZ30P080FNI
	39	Screw	BPZ30P100FTB

9.5 BUTTON LAYER SECTION

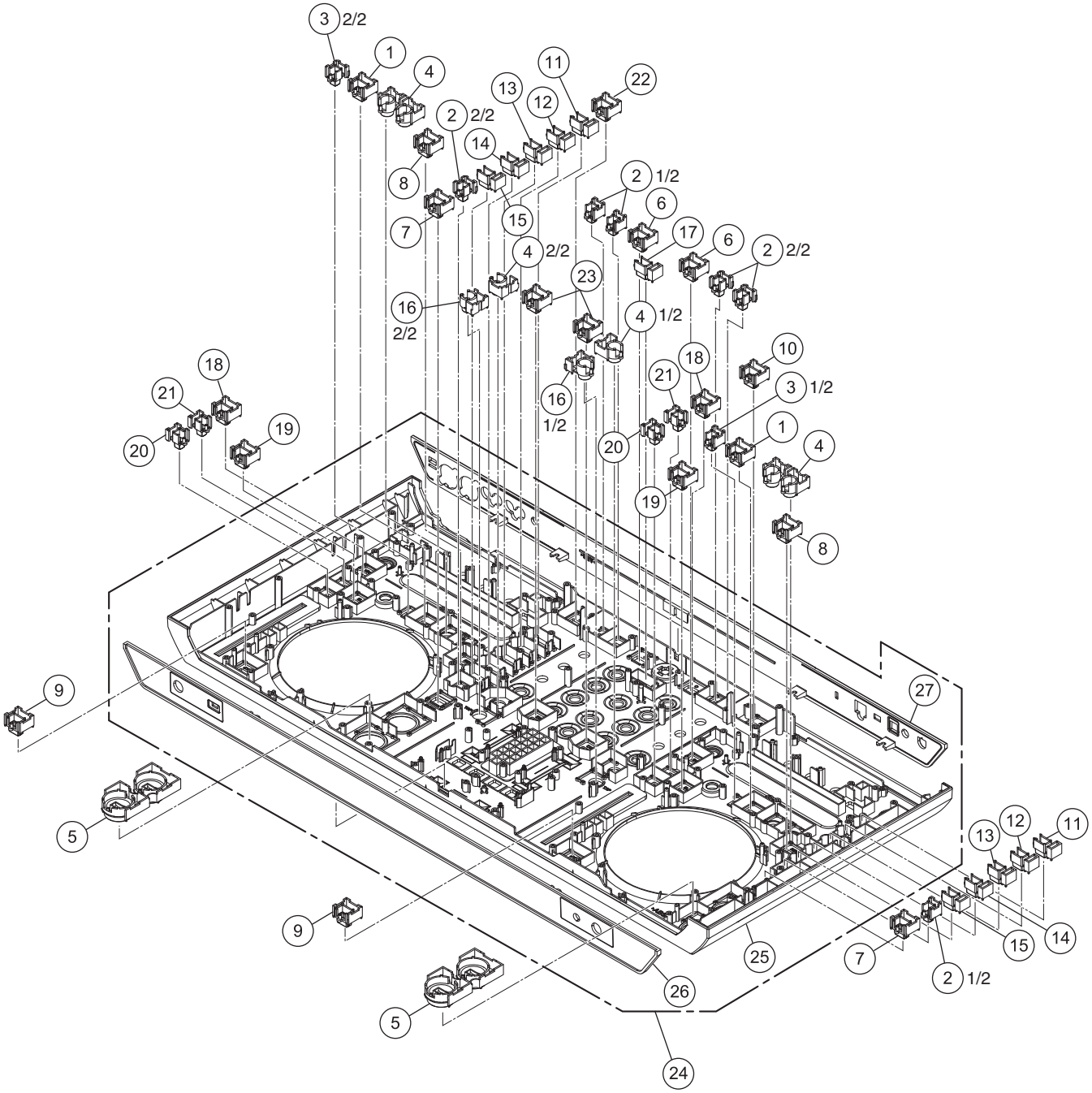

(1) BUTTON LAYER SECTION PARTS LIST

Mark	No.	Description	Part No.
	1	Button L (Opal)	DAC2657
	2	Button S (Opal)	DAC2662
	3	Button S (Black)	DAC2663
	4	Loop Button	DAC2671
	5	Play Button	DAC2682
	6	Button L (Black)	DAC2738
	7	Shift Button	DAC2740
	8	Rev Button	DAC2741
	9	Sync Button	DAC2742
	10	Load A Button	DAC2743
	11	HC1 Button	DAC2744
	12	HC2 Button	DAC2745
	13	HC3 Button	DAC2746
	14	HC4 Button	DAC2747
	15	HC5 Button	DAC2748
	16	TAP Button	DAC2749
	17	Button L Opal 1	DAC2750
	18	Vinyl Button	DAC2751
	19	Slip Button	DAC2752
	20	Button S (Opal) 1H	DAC2754
	21	Button S (Black) 1H	DAC2755
	22	Load B Button	DAC2756
	23	CUE Button	DAC2757
	24	1..Panel Assy/SY	See Contrast table (2)
	25	2..Control Panel	DNK5930
	26	2..Front Panel	DNK5931
	27	2..Rear Panel SY	See Contrast table (2)

(2) CONTRAST TABLE

DDJ-S1/SVYXJ8, UXJCB, FLPXJ, KXJ5 and AXJ5 are constructed the same except for the following:

Mark	No.	Symbol and Description	DDJ-S1/ SVYXJ8	DDJ-S1/ UXJCB	DDJ-S1/ FLPXJ	DDJ-S1/ KXJ5	DDJ-S1/ AXJ5
	24	1..Panel Assy/SY	DXB2112	DXB2111	DXB2111	DXB2116	DXB2114
	27	2..Rear Panel SY	DNK5932	DNK5933	DNK5933	DNK5937	DNK5935

9.6 JOG SECTION

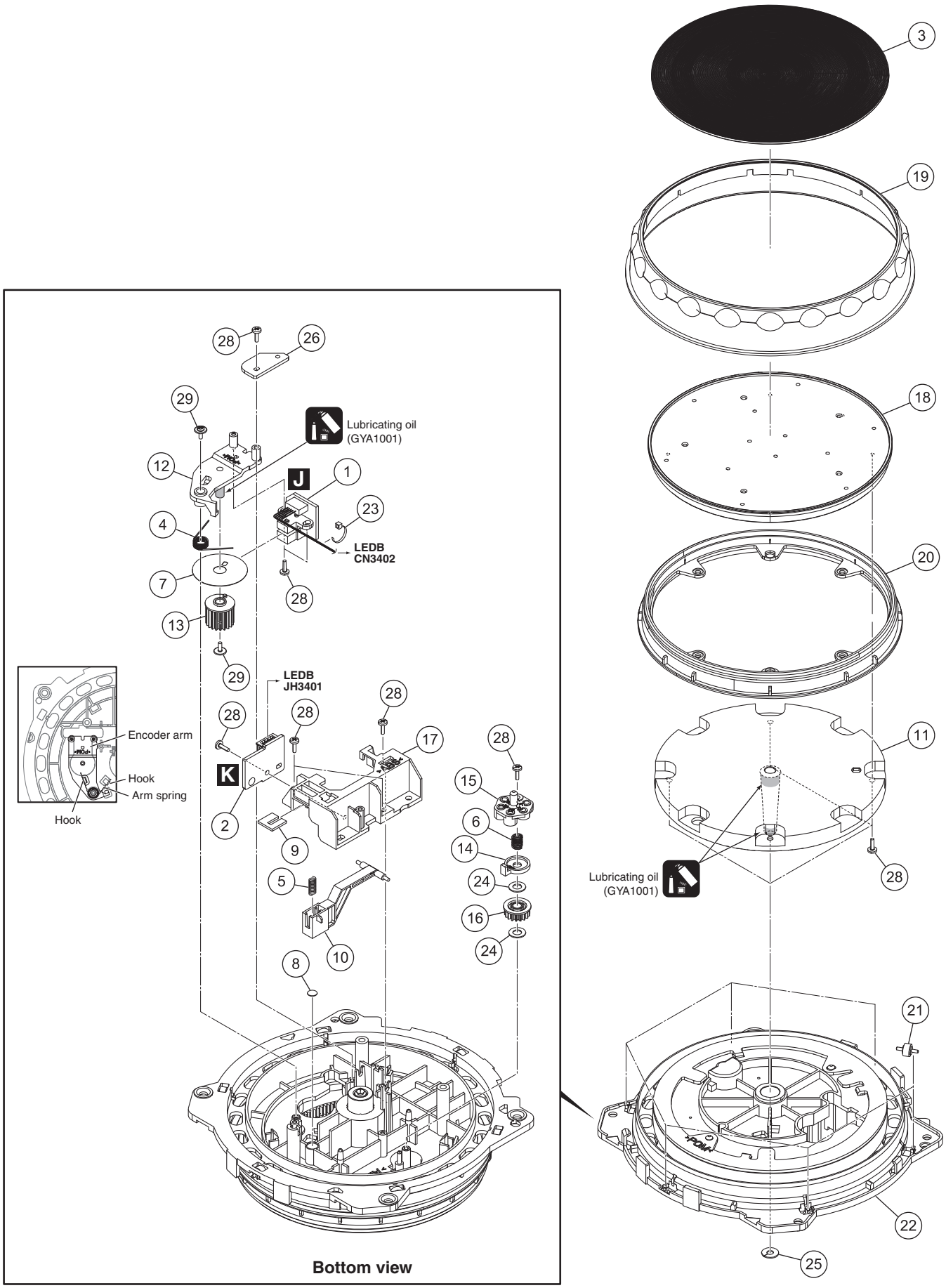

JOG SECTION PARTS LIST

Mark	No.	Description	Part No.
	1	JOGB Assy	DWX3238
	2	TCHB Assy	DWX3239
	3	JOG Plate	DAH2837
	4	Arm Spring	DBH1612
	5	Lever Spring	DBH1626
	6	Load Spring	DBH1676
	7	Encorder Plate	DEC2889
	8	Lever Cushion (A)	DEC3001
	9	Lever Cushion (B)	DEC3002
	10	JOG Lever	DNK4763
	11	JOG Shaft	DNK4934
	12	Encorder Arm	DNK4936
	13	Encorder Gear	DNK4937
	14	Load Smoother	DNK4939
	15	Adjust Plate	DNK4943
	16	Load Gear	DNK5178
	17	Lever Holder	DNK5206
	18	JOG Dial A	DNK5860
	19	JOG Dial B	DNK5861
	20	Ring Lens	DNK5945
	21	Roller B Assy	DXB1877
	22	JOG Holder Assy	DXB2002
	23	Binder	ZCA-SKB90BK
	24	Washer	WA41D070D025
	25	Washer	WT32D080D050
	26	STPB Assy	DWX3280
	27	•••••	
	28	Screw	BPZ20P060FTC
	29	Screw (FE)	DBA1265