9. EXPLODED VIEWS AND PARTS LIST

NOTES: ● *Parts marked by "NSP" are generally unavailable because they are not in our Master Spare Parts List.*
● *The ⚠ mark found on some component parts indicates the importance of the safety factor of the part. Therefore, when replacing, be sure to use parts of identical designation.*
● *Screws adjacent to ▼ mark on product are used for disassembly.*
● *For the applying amount of lubricants or glue, follow the instructions in this manual. (In the case of no amount instructions, apply as you think it appropriate.)*

9.1 PACKING SECTION

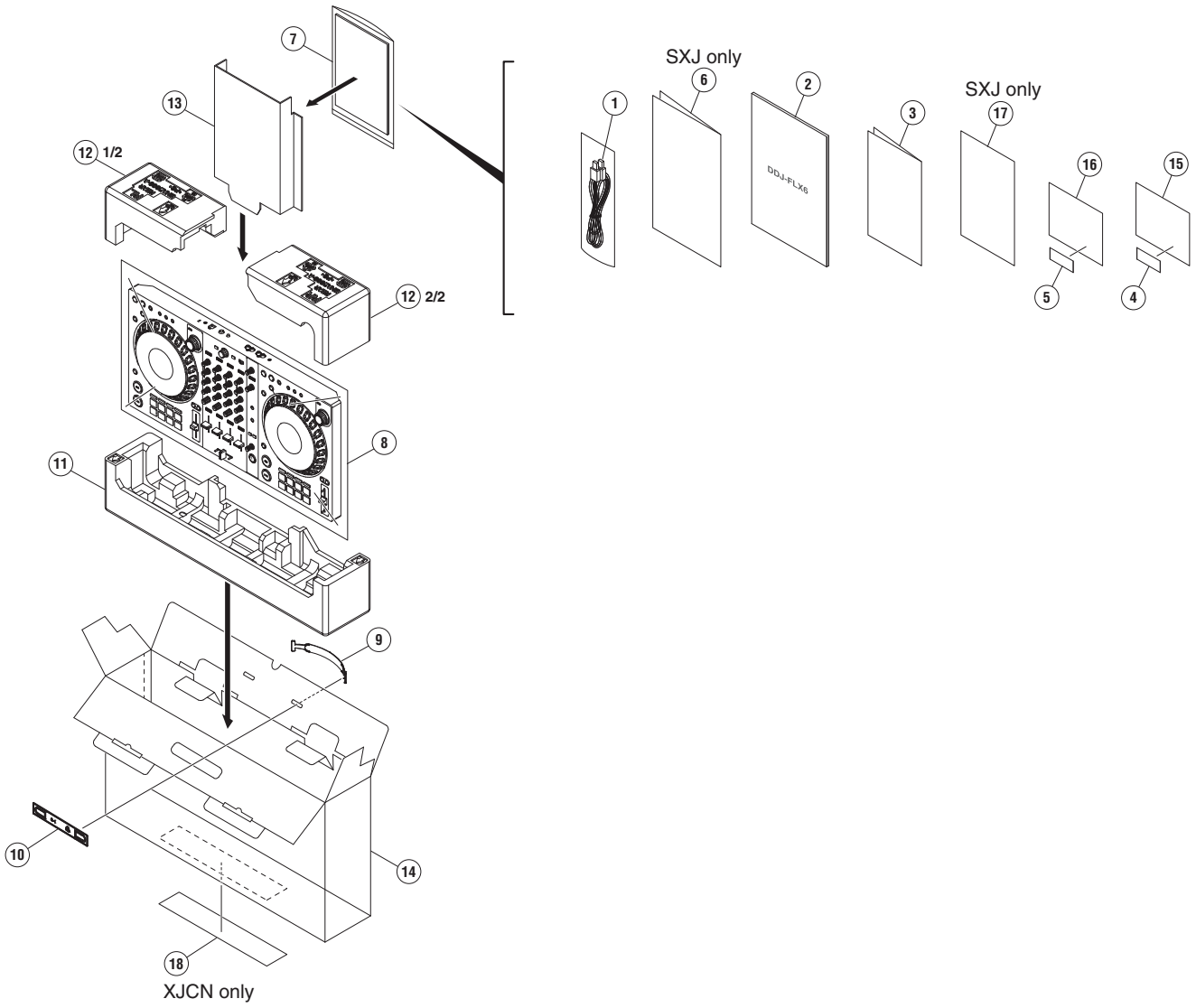

(1) PACKING SECTION PARTS LIST

Mark	No.	Description	Part No.
	1	USB Cable	DDE1150
	2	Quick Start Guide	See Contrast table (2)
	3	Precautions for use	See Contrast table (2)
NSP	4	Serato P'nT voucher	• • • • •
NSP	5	Serato FX voucher	• • • • •
NSP	6	Warranty card	See Contrast table (2)
NSP	7	Polyethylene Bag	AHG7117
	8	Packing Sheet	RHC1023
	9	Handle	DEC3783
	10	Spacer	DEC3784
	11	Packing Pad	DHA2008
	12	Packing Pad	DHA2009
	13	Partition	DHC1107
	14	Packing Case	DHG3797
NSP	15	Leaflet	DRM1434
NSP	16	Leaflet	DRM1442
NSP	17	Leaflet	See Contrast table (2)
	18	Label	See Contrast table (2)

(2) CONTRAST TABLE

DDJ-FLX6/SXJ and XJCN are constructed the same except for the following:

Mark	No.	Symbol and Description	DDJ-FLX6/SXJ	DDJ-FLX6/XJCN
	2	Quick Start Guide	DRH1607	DRH1608
	3	Precautions for use	DRH1609	DRH1610
NSP	6	Warranty card	DRY1274	Not used
NSP	17	Leaflet	DRH1622	Not used
	18	Label	Not used	DRW2986

9.2 EXTERIOR and CHASSIS SECTION

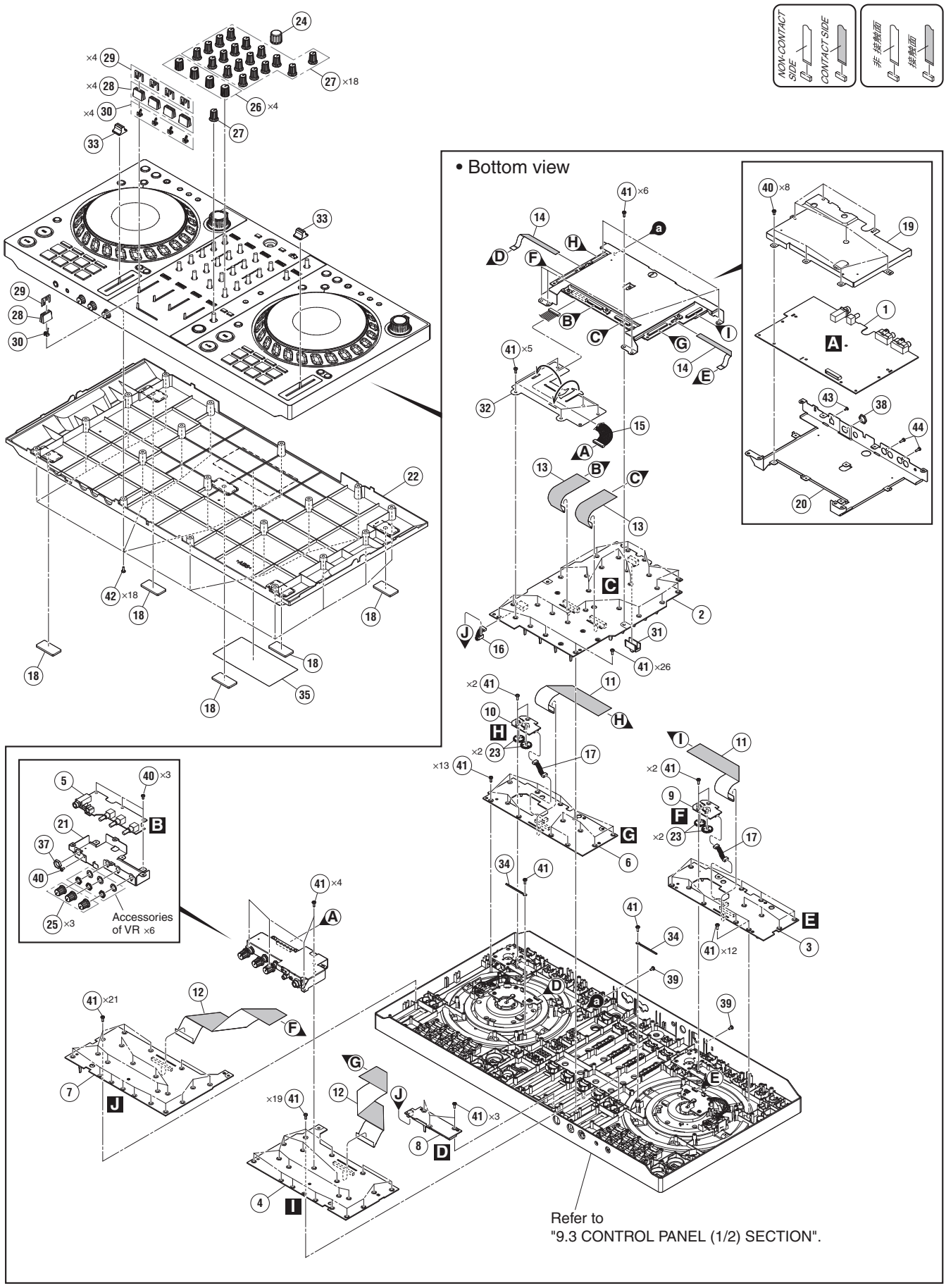

(1) EXTERIOR and CHASSIS SECTION PARTS LIST

Mark	No.	Description	Part No.
	1	MAIN Assy	DWX4488
	2	MIXER Assy	DWX4489
	3	DCKL Assy	DWX4494
	4	PADL Assy	DWX4495
	5	HPJK Assy	DWX4496
	6	DCKR Assy	DWX4497
	7	PADR Assy	DWX4498
	8	CRFD Assy	DWX4499
	9	TRN1 Assy	DWX4503
	10	TRN2 Assy	DWX4504
	11	FFC	DDD1982
	12	FFC	DDD1983
	13	FFC	DDD1984
	14	FFC	DDD1985
	15	Parallel Jumper	PF11PP-B30A
	16	Parallel Jumper	PF05PP-B07A
	17	Connector Assy	PF04PP-B05
	18	Sheet/Leg	DEC3534
	19	Shield Plate	DNH3459
	20	Stay	DNH3460
	21	Stay	DNH3461
⚠	22	Chassis	DNK6954
	23	Gear	DNK6952
	24	Knob	DAA1281
	25	Knob	DAA1432
	26	Knob	DAA1450
	27	Knob	DAA1452
	28	Knob	DAC3539
	29	Slider Knob 2	DAC2685
	30	Stopper/SLD	DNK6009
	31	SW Cap	DAC2753
	32	Sheet	DEC3961
	33	Knob	DNK6769
	34	Cord Clamper	DEX1025
NSP	35	Name Label	See Contrast table (2)
	36	•••••	
	37	Nut M12	DBN1018
	38	Nut (M12)	NKX2FNI
	39	Screw	BBZ30P060FTB
	40	Screw	BBZ30P060FTC
	41	Screw	BPZ30P080FNI
	42	Screw	BPZ30P100FTB
	43	Screw (M3*5)	DBA1340
	44	Screw	PPZ30P080FTB

(2) CONTRAST TABLE

DDJ-FLX6/SXJ and XJCN are constructed the same except for the following:

Mark	No.	Symbol and Description	DDJ-FLX6/SXJ	DDJ-FLX6/XJCN
NSP	35	Name Label	DAL1372	DAL1373

9.3 CONTROL PANEL (1/2) SECTION

• Bottom view

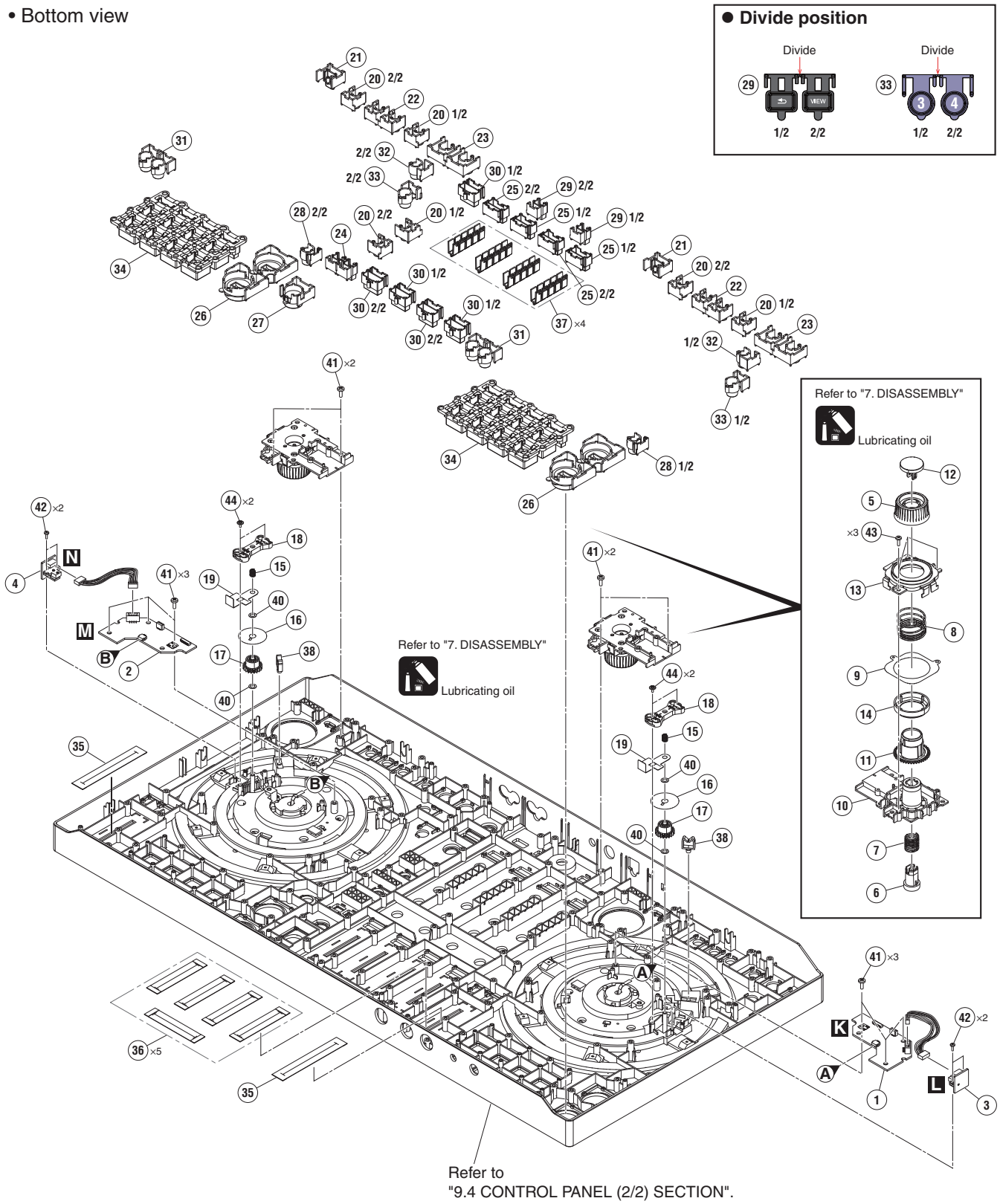

CONTROL PANEL (1/2) SECTION PARTS LIST

Mark No.	Description	Part No.
1	TCHL Assy	DWX4492
2	TCHR Assy	DWX4493
3	JOGRT1 Assy	DWX4501
4	JOGRT2 Assy	DWX4502
5	Knob	DAA1451
6	Button	DAC3553
7	Coil Spring	DBH1833
8	Coil Spring	DBH1834
9	Light-D Sheet	DEC3974
10	Base	DNK6947
11	Shaft	DNK6948
12	Cap	DNK6949
13	Lens	DNK6950
14	Spacer	DNK6951
15	Load Spring	DBH1676
16	Plate	DEC3700
17	Gear	DNK6942
18	Adjuster	DNK6956
19	Sheet	DEC3979
20	Button/TMP	DAC2845
21	Button/BCK	DAC2874
22	Button/CAL	DAC3020
23	Button/LOP	DAC3074
24	Button	DAC3381
25	Button	DAC3428
26	Button	DAC3433
27	Button	DAC3554
28	Button	DAC3555
29	Button	DAC3556
30	Button	DAC3557
31	Button	DAC3558
32	Button	DAC3559
33	Button	DAC3569
34	Button	DEB2080
35	Packing/TMP	DEC3392
36	Sheet	DEC3795
37	Lens	DNK6946
38	Holder	VEC1355
39	•••••	
40	Washer	WA41D070D025
41	Screw	BPZ30P080FNI
42	Screw	BPZ20P060FTC
43	Screw	BPZ26P080FTC
44	Screw (FE)	DBA1265

9.4 CONTROL PANEL (2/2) SECTION

Refer to "7. DISASSEMBLY"

Lubricating oil

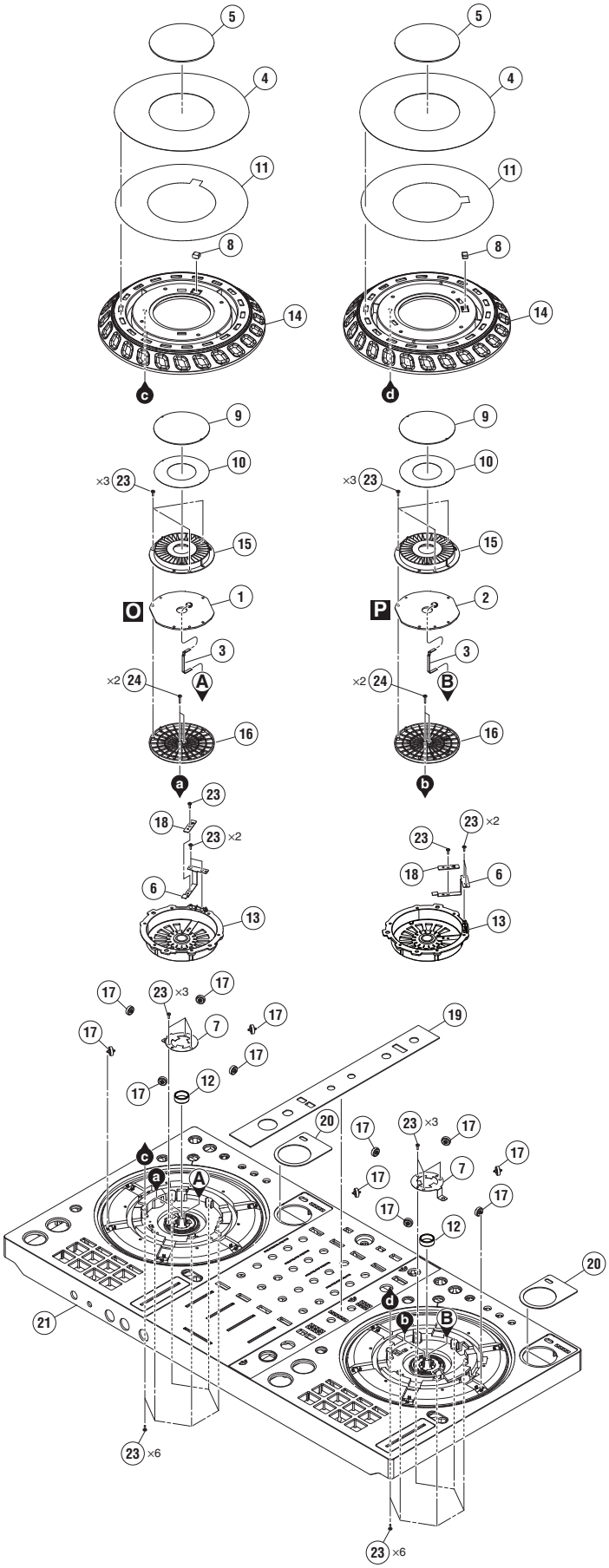

CONTROL PANEL (2/2) SECTION PARTS LIST

Mark	No.	Description	Part No.
	1	JLEDL Assy	DWX4490
	2	JLEDR Assy	DWX4491
	3	FFC	DDD1986
	4	Plate	DAH3306
	5	Window	DAH3307
	6	Leaf Spring	DBK1399
	7	Plate	DBK1400
	8	Gasket/JOG	DEC3562
	9	Sheet	DEC3952
	10	Light-D Sheet	DEC3953
	11	DS Tape	DEH1112
	12	Sleeve	DLA2278
	13	Jog Dial	DNK6939
	14	Jog Dial	DNK6940
	15	Reflector	DNK6941
	16	Holder	DNK6958
	17	Roller	DXB2178
	18	Plate	DNH3465
	19	Panel	DAH3315
	20	Plate	DAH3316
⚠	21	Control Panel	DNK6953
	22	•••••	
	23	Screw	BPZ20P060FTC
	24	Screw	BPZ20P100FTC

12. PCB PARTS LIST

NOTES: ● *Parts marked by "NSP" are generally unavailable because they are not in our Master Spare Parts List.*
● *The ⚠ mark found on some component parts indicates the importance of the safety factor of the part. Therefore, when replacing, be sure to use parts of identical designation.*
● *When ordering resistors, first convert resistance values into code form as shown in the following examples.*

Ex.1 When there are 2 effective digits (any digit apart from 0), such as 560 ohm and 47 k ohm (tolerance is shown by J = 5%, and K = 10%).

560 Ω	→	*56 × 10¹*	→ *561*	····· *RD1/4PU 5 6 1 J*
47 kΩ	→	*47 × 10³*	→ *473*	····· *RD1/4PU 4 7 3 J*
0.5 Ω	→	*R50*		····· *RN2H R 5 0 K*
1 Ω	→	*1R0*		····· *RS1P 1 R 0 K*

Ex.2 When there are 3 effective digits (such as in high precision metal film resistors).

5.62 kΩ	→	*562 × 10¹*	→ *5621*	····· *RN1/4PC 5 6 2 1 F*

LIST OF ASSEMBLIES

Mark	No.	Description	Part No.
	1	MAIN ASSY	DWX4488
	1	MIXER ASSY	DWX4489
NSP	1	JOGA ASSY	DWM2770
	2	JLEDL ASSY	DWX4490
	2	JLEDR ASSY	DWX4491
	2	TCHL ASSY	DWX4492
	2	TCHR ASSY	DWX4493
NSP	1	PNL1 ASSY	DWM2771
	2	DCKL ASSY	DWX4494
	2	PADL ASSY	DWX4495
	2	HPJK ASSY	DWX4496
NSP	1	PNL2 ASSY	DWM2772
	2	DCKR ASSY	DWX4497
	2	PADR ASSY	DWX4498
	2	CRFD ASSY	DWX4499
	2	JOGRT1 ASSY	DWX4501
	2	JOGRT2 ASSY	DWX4502
	2	TRN1 ASSY	DWX4503
	2	TRN2 ASSY	DWX4504

Mark	No.	Description	Part No.

A
MAIN ASSY

SEMICONDUCTORS

Mark	No.	Description	Part No.
⚠	IC	301,302,304	MM3472XRRE@V
⚠	IC	303	BD9B100MUV@V
	IC	305,1207	PST8442NR@V
⚠	IC	501	NJM2878F3-05
⚠	IC	502	MM1856A50N
⚠	IC	503	BD9851EFV
⚠	IC	504	NJM2878F3-33
⚠	IC	505	NJM2831F06@V
NSP	IC	701	R5S72690W266FP
	IC	702	DYW2225
	IC	703	PST8427N
	IC	704,707,708	TC7SH08FUS2
	IC	705,706	74VHC4051AFT
	IC	1101	NJM4565MD
	IC	1102	AK5720VT
	IC	1201	PCM1742KE
	IC	1202,1203	PCM1753DBQ
	IC	1204,1205	NJM4580MD
	IC	1206	BH3547F
	Q	301,508,1203	LTC024EEB
⚠	Q	302,309	RTQ040P02
	Q	304	KTX101U
	Q	308,509,513,514	LSCR523UB
⚠	Q	501	RSQ035P03
⚠	Q	502	RSQ045N03
	Q	503,504,515	LTA024EEB
	Q	505-507,510,511	LSAR523UB
	Q	512	LTC014YEB
	Q	1101,1102	2SK209
	Q	1204,1205,1214	LSCR523UB
	Q	1206-1209	INC2002AC1
	D	303,507-513	1SS355L@V
	D	501,502,506	RB551VM-30
	D	515,516,1101,1102	RB501VM-40

MISCELLANEOUS

	L	101,102,710 CHIP COIL (4.7 uH)	BTH1102
	L	301,302,304 SMD SPL INDUCTOR	CTH1531
	L	303 COIL	ATH7015
	L	305 SMD SPL INDUCTOR	CTH1531
	L	501,502 POWER INDUCTOR	ATH7011
	L	701-708 INDUCTOR	CTF1545
	L	711 CHIP BEADS	VTL1129
	L	712,713 CHIP SOLID INDUCTOR	QTL1013
	JA	301 USB CONNECTOR	DKN1237
	JA	1101 6.5 DIA JACK	DKN1669
	JA	1201,1202 PIN JACK(2P)	AKB7181
	X	701 CRYSTAL (24.576 MHz)	DSS1204
	X	702 RESONATOR (48.000 MHz)	CSS1760
	X	703 CRYSTAL RESONATOR (10.000 MHz)	CSS1799
	CN	101,105 29P CONNECTOR	VKN1321
	CN	102,109 30P CONNECTOR	VKN1322
	CN	103,107 CONNECTOR 40PIN	DKN1481
	CN	104,106 FFC/FPC CONNECTOR	DKN1675
	CN	108 CONNECTOR	AKM1297
		1001 PHONE SHIELD	DNF1875
⚠	P	301 PROTECTOR (1.250 A)	DEK1098
	VA	1101-1103,1201-1206 VARISTORS	EZJZ1V270RM

RESISTORS

	R	101	RS1/10SR221J
	R	301,311	RS1/10SR1004D
	R	302,312	RS1/16SS1503D
	R	303,306,313	RS1/16SS3003D
	R	304	RS1/16SS2703D

Mark	No.	Description	Part No.
	R	305,315	RS1/16SS5602D
	R	314	RS1/16SS1003D
	R	316	RS1/16SS3902D
	R	319,320,502,512	RS1/16SS1002D
	R	337,338	RS1/16SS2003D
	R	350	RS1/8SQ0R0J
	R	501	RS1/16SS1502D
	R	503,506	RS1/4SA100J
	R	504,520	RS1/16SS3002D
	R	505,523	RS1/16SS6802D
	R	507	RS1/16SS4702D
	R	509,527	RS1/16SS1202D
	R	515,519	RS1/10SR220J
	R	522	RS1/16SS6201D
	R	524	RS1/16SS1002D
	R	526	RS1/16SS3302D
	R	528	RS1/16SS2702D
	R	529	RS1/4SA0R0J
	R	562,801,1115,1205	RS1/10SR0R0J
	R	726,743,748,749	RAB4CQ101J
	R	727,728,730,731	RAB4CQ560J
	R	737-740,745,747	RAB4CQ103J
	R	742,744,746,751	RAB4CQ560J
	R	750,753,756,779	RAB4CQ103J
	R	752,754,758,798	RAB4CQ101J
	R	755,761,763,766	RAB4CQ560J
	R	767,770,791,794	RAB4CQ560J
	R	774	RAB4CQ104J
	R	775	RAB4CQ472J
	R	782	RS1/16SS5601D
	R	799,831	RAB4CQ101J
	R	812,1101,1102	RS1/10SR101J
	R	1103,1104	RS1/10SR121J
	R	1105,1106,1223,1225	RS1/10SR3301D
	R	1107,1114	RS1/10SR1801D
	R	1108,1111	RT0603DRD071KL@V
	R	1109,1113	RT0603DRD073K3L@V
	R	1110	RS1/10SR3001D
	R	1117	RS1/10SR1201D
	R	1118	RS1/10SR5602D
	R	1119	RS1/10SR103J
	R	1120	RS1/10SR2200D
	R	1206	RS1/10SR0R0J
	R	1213,1214	RS1/10SR4701D
	R	1215,1216	RS1/10SR8201D
	R	1219,1221	RS1/10SR1002D
	R	1220,1222	RS1/10SR1302D
	R	1224,1226	RS1/10SR5101D
	R	1227,1228	RS1/10SR271J
	R	1237,1238	RS1/10SR471J
	R	1239-1242	RS1/10SR104J
	R	1243,1244,1247,1248	RS1/10SR183J
	R	1245,1246,1249-1254	RS1/10SR3300D
	R	1259-1262	RS1/10SR330J
	VR	1101 POTENTIOMETER	DCS1111
		Other Resistors	RS1/16SS###J

CAPACITORS

	C	101,103-105	0402B104K160CT
	C	102,106,113,115	0402B104K250CT
	C	107-112,114,116	0402B104K160CT
	C	117,119-121,314	0402B104K160CT
	C	118,501,521,537	0402B104K250CT
	C	122-133,305,306	0402B102K500CT
	C	134,135,309,534	0402N101J500CT
	C	301,302,307,325	0402X475M100CT
	C	308,360,529	0603X225K160CT
	C	310,333,553,559	0402B103K250CT
	C	312,334	0402N8R0C500CT
	C	313,840,842,862	0402N120J500CT
	C	316,317,328,329	0402B102K500CT
	C	318,323 (1 uF)	ACE7129
	C	319,320,330,331	0402B104K160CT
	C	321,343,567	0805X226M100CT
	C	322,324,339,355	0805X106K100CT
	C	332,356,502,512	0402X105K160CT
	C	335,338,711,712	0402B102K500CT
	C	336,1258,1259	0402N181J500CT
	C	337,340,342,344	0402B104K160CT
	C	345	0402N221J500CT
	C	359,516,525,871	0805X106K100CT
	C	364,535,544,545	0402N102J500CT
	C	505,536	0402B472K500CT
	C	506,510	CEVW471M10
	C	508	0402B332K500CT
	C	513,549,550	0402X105K250CT
	C	514,538	0402X474K250CT
	C	519	0402N561J500CT
	C	520,522,526,528	0402X105K160CT
	C	527,707,708,843	0402B104K160CT
	C	532	0402B682K500CT
	C	539,547,554	0402B104K250CT
	C	540,541 (10 uF)	CCG1236
	C	551,1269,1270 (220 uF/16 V)	CCH2090
	C	556,909,911,914	0402N102J500CT
	C	557,1124,1125	CEVW470M25
	C	560	0603X225K250CT
	C	561,565,713-719	0402N101J500CT
	C	564,1213,1214	0603B103K500CT
	C	703 (47 uF/16 V)	CCH1961
	C	704,1237,1273	CEVW470M6R3
	C	705,706,738-745	0402B103K250CT
	C	709,710,860	0402B471K500CT
	C	722-737,746-748	0402N101J500CT
	C	749,759,760,765	0402B103K250CT
	C	750-758,761-764	0402N101J500CT
	C	766,777,778,783	0402B103K250CT
	C	767-776,779-782	0402N101J500CT
	C	784,795,796,801	0402B103K250CT
	C	785-794,797-800	0402N101J500CT
	C	802,811,812,817	0402B103K250CT
	C	803-810,813-816	0402N101J500CT
	C	818,828,829,832	0402B103K250CT
	C	819,820,823,825	0402N101J500CT
	C	827,830,831,834	0402N101J500CT
	C	833,836,837,839	0402B103K250CT
	C	835,838,923,1116	0402N471J500CT
	C	841,844-848,863	0402B103K250CT

Mark	No.	Description	Part No.
	C	851,856-858,935	0402N101J500CT
	C	859,861,867,868	0402B102K500CT
	C	864,866,870,875	0402B104K160CT
	C	865,872,873,887	0402B103K250CT
	C	869	CEVW101M4
	C	874,878,879,895	0805X106K100CT
	C	876,880,891,892	0402B104K160CT
	C	877	0402N100J500CT
	C	881-885,889,890	0402B102K500CT
	C	886,900	0402N120J500CT
	C	888,893,1119,1142	0402B103K250CT
	C	894,897,898	0402B102K500CT
	C	896,918,1145,1243	0805X106K100CT
	C	910,913,917,920	0402B104K160CT
	C	915,921,924-926	0402N102J500CT
	C	916,1117,1121	0402B222K500CT
	C	919,1136	0402X105K160CT
	C	922,932	0402B104K160CT
	C	928,929,931,933	0402N102J500CT
	C	934,940-945,1108	0402N102J500CT
	C	936,938,939,1219	0402N101J500CT
	C	1109,1122,1128,1131	0603B104K500CT
	C	1112,1113	0603B222K500CT
	C	1114,1115,1133,1134	0402N102J500CT
	C	1120	0603N331J500CT
	C	1123	CEVWNP100M16
	C	1129	CEVW100M16
	C	1130,1246,1247,1250	CEVW220M16
	C	1132,1210-1212,1238	0603B104K500CT
	C	1135	0402X474K500CT
	C	1201,1202 (100 uF/16 V)	CCH1565
	C	1203,1271,1272	CEVW101M16
	C	1216-1218,1239,1274	0402N102J500CT
	C	1220	0402N101J500CT
	C	1240,1241,1262,1263	0402B103K500CT
	C	1242	CEHVAW470M16
	C	1244,1248,1249,1275	0805X106K100CT
	C	1245	0402B104K500CT
	C	1251,1276-1279	CEVW220M16
	C	1252,1256	0402N681J500CT
	C	1253,1257	0402N471J500CT
	C	1254,1255	0603X105K250CT
	C	1260,1261	0402N151J500CT
	C	1264,1266-1268	0603B104K500CT
	C	1265	0402X475M100CT
	C	1280-1283	0402B222K500CT
	C	1284,1286	0402N102J500CT
	C	1285,1287	0603B104K250CT

C

MIXER ASSY

SEMICONDUCTORS

	IC	1801-1804	TC74HC4051AF
	Q	1501-1507	LSCR523UB
	Q	1508,1510,1512,1514	LTC124EUB
	Q	1509,1511,1513,1515	2SB1689
	Q	1516,1518,1520,1522	LTC124EUB
	Q	1517,1519,1521,1523	2SB1689
	Q	1801-1803	LTC124EUB
	D	1502	LTL17KTBP5D@V
	D	1504,1512,1520,1528	LTL17KRN8D@V
	D	1505,1506,1509,1511	LTL17KYRN5D-P@V
	D	1507,1508,1515,1516	LTL17KGH5D-P
	D	1513,1514,1517,1519	LTL17KYRN5D-P@V
	D	1521,1522,1526,1529	LTL17KYRN5D-P@V
	D	1523,1524,1531,1532	LTL17KGH5D-P
	D	1530,1534,1550,1557	LTL17KYRN5D-P@V
	D	1536-1549,1551-1555	SLI-343U8R
	D	1801-1825	1SS355L@V
	D	1826,1827	LTL17KYRN5D-P@V

MISCELLANEOUS

	S	1801-1808,1810-1812 TACT SWITCH	DSG1079
	S	1809 ROTARY ENCODER	DSX1138
	S	1813 SLIDE SWITCH	DSH1066
	S	1814-1818 TACT SWITCH	DSG1079
	CN	1401 L-PLUG(5P)	KM200NA5L
	CN	1403,1404 29P CONNECTOR	VKN1260

RESISTORS

	VR	1801-1804 SLIDE VR	DCV1035
	VR	1805,1807-1810 POTENTIOMETER	DCS1097
	VR	1806,1811,1812 POTENTIOMETER	DCS1096
	VR	1813-1816 POTENTIOMETER	DCS1097
	VR	1817,1822,1823 POTENTIOMETER	DCS1096
	VR	1818-1821 POTENTIOMETER	DCS1097
	VR	1824-1827 POTENTIOMETER	DCS1097
		Other Resistors	RS1/10SR###J

CAPACITORS

	C	1401,1407	CEJQ470M6R3
	C	1402,1404,1406,1408	0603B104K500CT
	C	1403,1405	CEJQ101M16
	C	1501-1508,1801,1803	0603B104K500CT
	C	1802,1804,1806	0603B103K500CT
	C	1805,1807,1808	0603B104K500CT
	C	1809-1818,1821-1823	0603N471J500CT
	C	1825-1828,1857-1878	0603B104K500CT
	C	1829-1840	0603N102J500CT
	C	1841-1843,1845-1851	0603N471J500CT
	C	1853-1856	0603N471J500CT

JOGA ASSY
Consists of
JLEDL ASSY
JLEDR ASSY
TCHL ASSY
TCHR ASSY

OPKM

JOGA ASSY

SEMICONDUCTORS

	IC	2001-2005,2101-2105	74VHC595FT
NSP	IC	2201,2301	PIC10F206-I/OT
	IC	2202,2302	74VHCT126AFT
	D	2001-2036,2101-2136	FC-1608SXK630D08
	D	2201,2301	DAN217UM
	D	2202,2302	RB520G-30

MISCELLANEOUS

	L	2001,2101 CHIP SOLID INDUCTOR	XTL3010
	L	2201,2202,2204,2301 INDUCTOR	CTF1786

Mark	No.	Description	Part No.
	L	2205,2206,2305,2306 CHIP BEADS	VTL1126
	L	2302,2304 INDUCTOR	CTF1786
	KN	2201,2202 WRAPPING TERMINAL	CKF1089
	KN	2301,2302 WRAPPING TERMINAL	CKF1089
	CN	2001,2101 FFC/FPC CONNECTOR	CKS6634
	CN	2201,2301 CONNECTOR	AKM1275
	CN	2203,2303 FFC/FPC CONNECTOR	DKN1675
	CN	2204,2304 FFC/FPC CONNECTOR	CKS6634
	VA	2201,2202,2301 SMD VARISTOR	EZJZ1V80010
	VA	2302 SMD VARISTOR	EZJZ1V80010
RESISTORS			
	R	2201,2202,2301,2302	DCN1187
	R	2206,2306	RS1/16SS2202D
	R	2213,2220,2313,2320	RS1/10SR0R0J
	R	2221,2321	RAB4CQ221J
	Other Resistors		RS1/16SS###J
CAPACITORS			
	C	2001,2006-2009,2101	0402B104K500CT
	C	2002-2005,2102-2105	0402N221J500CT
	C	2010-2013,2015-2019	0402N102J500CT
	C	2014,2114,2209,2309	0805X106K100CT
	C	2106-2109,2202,2203	0402B104K500CT
	C	2110-2113,2115-2119	0402N102J500CT
	C	2201,2301	0402N221J500CT
	C	2204,2207,2304,2307	0402N220J500CT
	C	2208,2308	CEVW101M16
	C	2210,2302,2303,2310	0402B104K500CT

PNL1 ASSY
Consists of
DCKL ASSY
PADL ASSY
HPJK ASSY

E I B

PNL1 ASSY

SEMICONDUCTORS

	Q	2401,2402,2503,2505	LTC124EUB
	Q	2501,2502,2511-2514	LSCR523UB
	Q	2504,2506,2508,2510	ISA1602AM1
	Q	2507,2509,2601,2602	LTC124EUB
	Q	2701-2703,2705,2707	LSCR523UB
	Q	2704,2708,2710,2714	LTC124EUB
	Q	2706,2709,2712,2715	ISA1602AM1
	Q	2711,2713	LSCR523UB
	Q	2801-2804	INC2002AC1
	D	2401-2408,2601-2607	1SS355L@V
	D	2501,2503,2706,2711	LTL17KYRN5D-P@V
	D	2502,2504,2506,2508	SLI-343U8R
	D	2505,2509-2512	LTL17KTBP5D@V
	D	2507	LTL17KRN8D@V
	D	2701	LTW-1GHCV4-PN@V
	D	2702-2705,2707-2710	LTL17KTBP5D@V
	D	2712-2715,2718-2721	LTL17KTBP5D@V
	D	2716	LTL17KCGP4J
	D	2801-2804	DF2B18FU

MISCELLANEOUS

	JA	2801 STEREO MINI JACK	XKN3017
	JA	2802 6.5 DIA JACK	DKN1669
	KN	2801 SCREW PLATE	VNE1948
	S	2401-2409,2601-2607 TACT SWITCH	DSG1079
	S	2410 TACT SWITCH	DSG1089
	S	2608-2617 TACTILE SWITCH	DSG1153
	CN	2501 30P CONNECTOR	VKN1261
	CN	2502 L-PLUG(4P)	KM200NA4L
	CN	2701 40P CONNECTOR	VKN2007
	CN	2801 L-PLUG(11P)	KM200NA11L
	VA	2601,2602,2801,2802 VARISTORS	EZJZ1V270RM
RESISTORS			
	R	2601,2602	RS1/10SR2201D
	R	2710	RS1/10SR9101D
	VR	2601 VARIABLE RESISTOR	DCV1011
	VR	2801,2803 ROTARY VR	DCS1071
	VR	2802 ROTARY VR	DCS1148
	Other Resistors		RS1/10SR###J
CAPACITORS			
	C	2501,2503,2505,2701	CEJQ470M16
	C	2502,2504,2506,2603	0603B104K250CT
	C	2507,2508,2707,2708	0603N102J500CT
	C	2601	CEJQ470M6R3
	C	2702,2704,2706,2802	0603B104K250CT
	C	2703,2705,2801	CEJQ470M16
	C	2803,2804,2815,2816 (220 uF/6.3 V)	DCH1344
	C	2805-2808	0603B223K500CT
	C	2811,2817	0603B103K500CT
	C	2812-2814	0603B104K250CT

PNL2 ASSY
Consists of
DCKR ASSY
PADR ASSY
CRFD ASSY
JOGRT1 ASSY
JOGRT2 ASSY
TRN1 ASSY
TRN2 ASSY

G J D L N F H

PNL2 ASSY

SEMICONDUCTORS

	Q	2901,2902,3003,3005	LTC124EUB
	Q	3001,3002,3011-3014	LSCR523UB
	Q	3004,3006,3008,3010	ISA1602AM1
	Q	3007,3009,3101,3102	LTC124EUB
	Q	3201-3203,3205,3207	LSCR523UB
	Q	3204,3208,3210,3214	LTC124EUB
	Q	3206,3209,3212,3215	ISA1602AM1
	Q	3211,3213	LSCR523UB
	D	2901-2908,3101-3107	1SS355L@V
	D	3001,3003,3206,3211	LTL17KYRN5D-P@V
	D	3002,3004,3006,3008	SLI-343U8R
	D	3005,3009-3012	LTL17KTBP5D@V
	D	3007	LTL17KRN8D@V
	D	3201	LTW-1GHCV4-PN@V
	D	3202-3205,3207-3210	LTL17KTBP5D@V
	D	3212-3215,3218-3221	LTL17KTBP5D@V
	D	3216	LTL17KCGP4J

MISCELLANEOUS

	S	2901-2909,3101-3107 TACT SWITCH	DSG1079

Mark	No.	Description	Part No.
S	2910	TACT SWITCH	DSG1089
S	3108-3117	TACTILE SWITCH	DSG1153
CN	3001	30P CONNECTOR	VKN1261
CN	3002,3501,3551	L-PLUG(4P)	KM200NA4L
CN	3201	40P CONNECTOR	VKN2007
CN	3301	PLUG(5P)	KM200NA5
JP	3401,3451	CONNECTOR ASS'Y	PF04PG-Q07
PC	3401,3451	PHOTO INTERRUPTER	KE-2N18-15
VA	3101,3102,3301	VARISTORS	EZJZ1V270RM

RESISTORS

R	3101,3102		RS1/10SR2201D
R	3216		RS1/10SR9101D
R	3501,3502,3551,3552		RS1/10SR1002D
VR	3101	VARIABLE RESISTOR	DCV1011
VR	3301	VARIABLE RESISTOR	DCV1023
VR	3501,3502,3551,3552	ROTARY VR	DCS1149
	Other Resistors		RS1/10SR###J

CAPACITORS

C	3001,3003,3005,3201		CEJQ470M16
C	3002,3004,3006,3103		0603B104K250CT
C	3007,3008,3207,3208		0603N102J500CT
C	3101		CEJQ470M6R3
C	3202,3204,3206,3302		0603B104K250CT
C	3203,3205		CEJQ470M16
C	3301		0603N471J500CT
C	3401,3451,3501,3551		0603X105K250CT
C	3402,3452		0603B103K500CT