# 9. EXPLODED VIEWS AND PARTS LIST

*NOTES:* ● *Parts marked by "NSP" are generally unavailable because they are not in our Master Spare Parts List.*
● *The ⚠ mark found on some component parts indicates the importance of the safety factor of the part. Therefore, when replacing, be sure to use parts of identical designation.*
● *Screws adjacent to ▼ mark on product are used for disassembly.*
● *For the applying amount of lubricants or glue, follow the instructions in this manual. (In the case of no amount instructions, apply as you think it appropriate.)*

## 9.1 PACKING SECTION

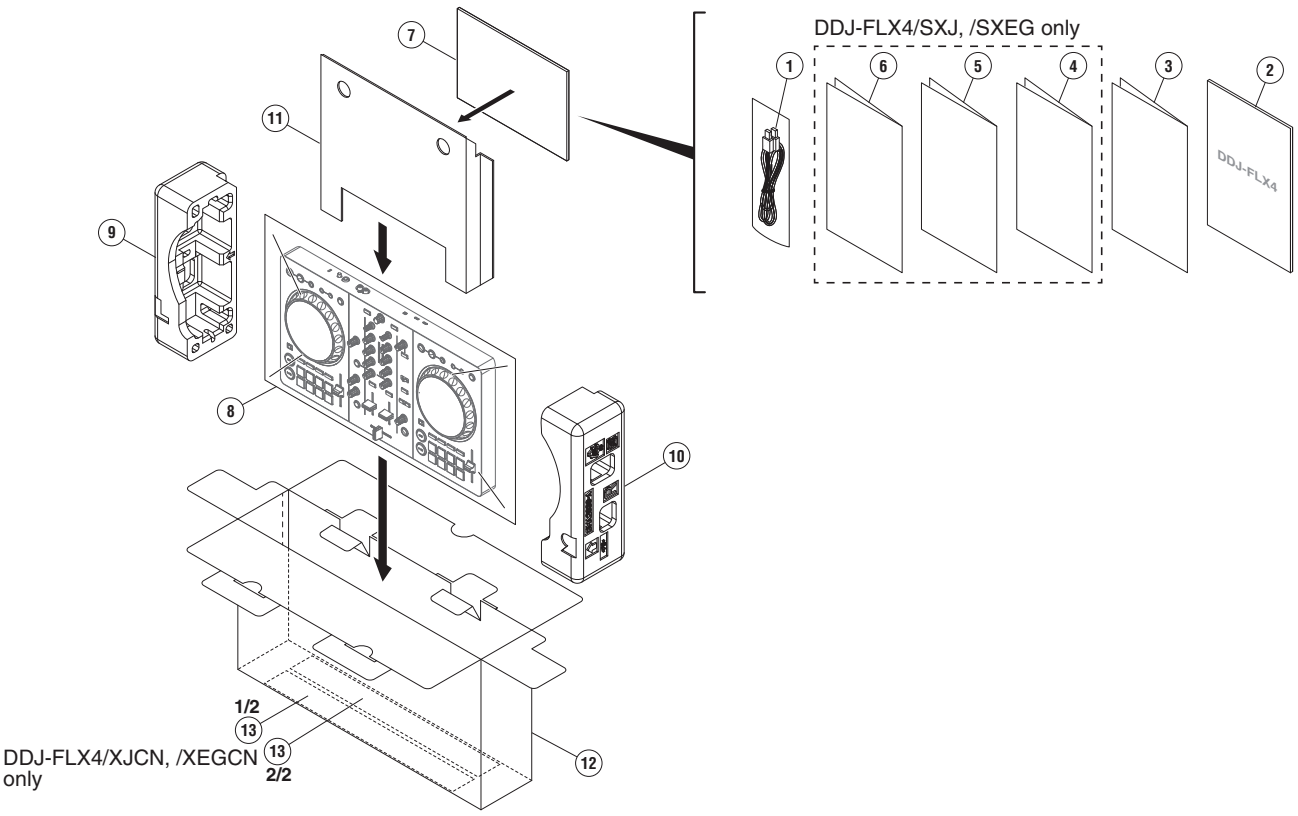


### (1) PACKING SECTION PARTS LIST

| Mark | No. | Description | Part No. |
|---|---|---|---|
| | 1 | USB Cable | DDE1157 |
| | 2 | Quick Start Guide | See Contrast table (2) |
| | 3 | Precautions for Use | See Contrast table (2) |
| NSP | 4 | Warranty Card (Europe) | See Contrast table (2) |
| NSP | 5 | Warranty Card (North America) | See Contrast table (2) |
| NSP | 6 | Leaflet | See Contrast table (2) |
| NSP | 7 | Polyethylene Bag | AHG7117 |
| | 8 | Packing Sheet | AHG7053 |
| | 9 | Packing Pad | DHA2029 |
| | 10 | Packing Pad | DHA2030 |
| | 11 | Partition | DHC1113 |
| | 12 | Packing Case | See Contrast table (2) |
| NSP | 13 | Label | See Contrast table (2) |

### (2) CONTRAST TABLE

DDJ-FLX4/SXJ, SXEG, XJCN and XEGCN are constructed the same except for the following:

| Mark | No. | Symbol and Description | DDJ-FLX4/SXJ | DDJ-FLX4/SXEG | DDJ-FLX4/XJCN | DDJ-FLX4/XEGCN |
|---|---|---|---|---|---|---|
| | 2 | Quick Start Guide | DRH1716 | DRH1751 | DRH1717 | DRH1752 |
| | 3 | Precautions for Use | DRH1718 | DRH1753 | DRH1719 | DRH1754 |
| NSP | 4 | Warranty Card (Europe) | DRY1274 | DRY1277 | Not used | Not used |
| NSP | 5 | Warranty Card (North America) | DRY1278 | DRY1279 | Not used | Not used |
| NSP | 6 | Leaflet | DRH1742 | DRH1755 | Not used | Not used |
| | 12 | Packing Case | DHG3880 | DHG3881 | DHG3880 | DHG3881 |
| NSP | 13 | Label | Not used | Not used | DRW3042 | DRW3058 |

# 9.2 EXTERIOR SECTION

• Bottom view

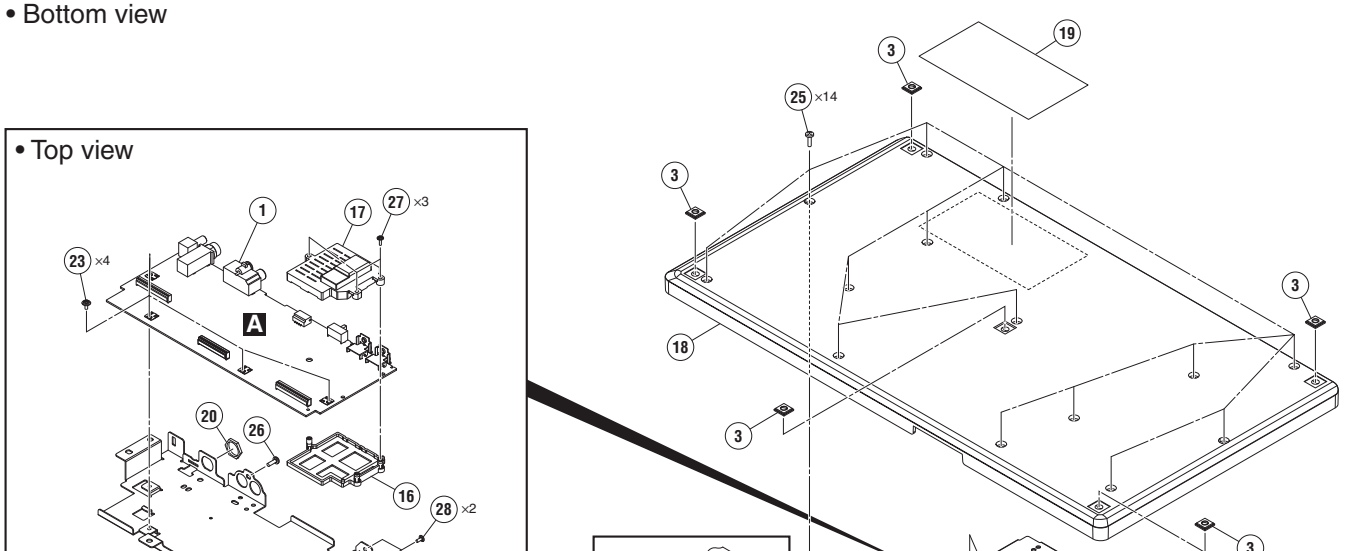


• Top view




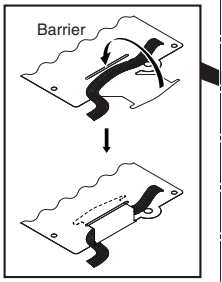


• Top view

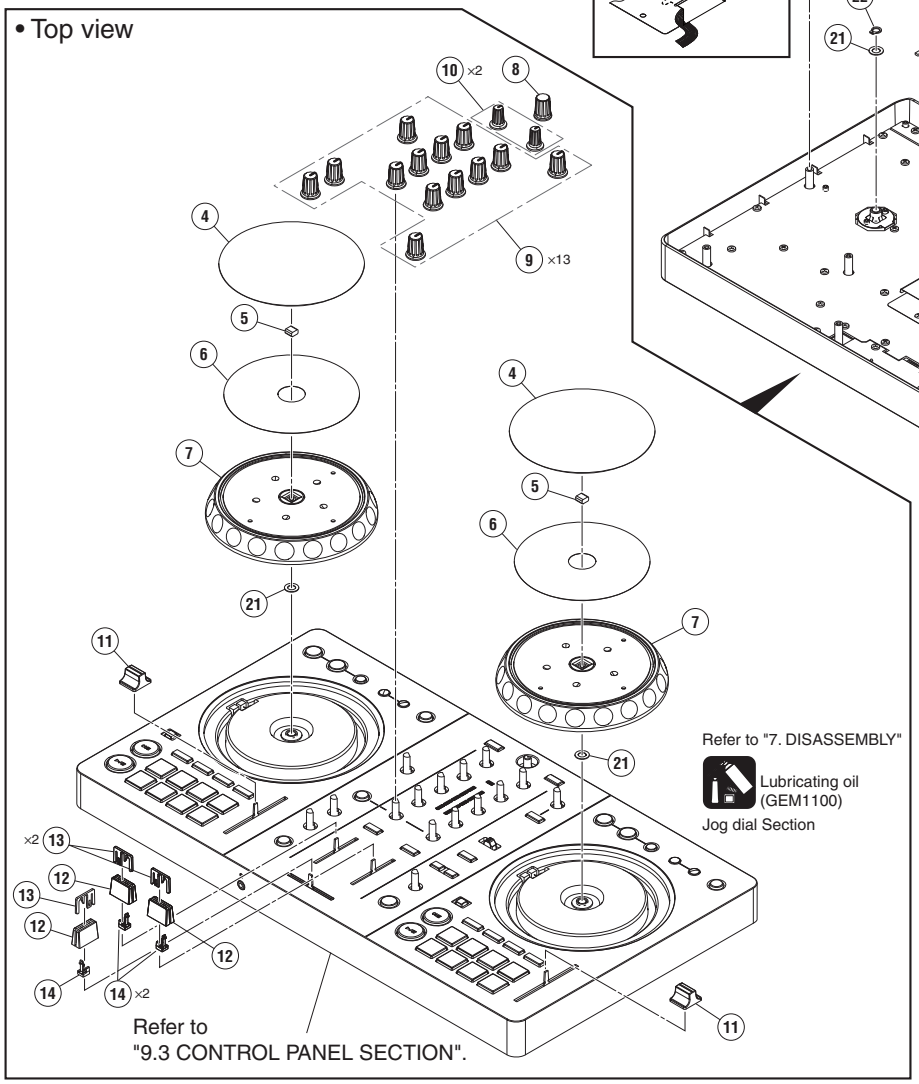

## (1) EXTERIOR SECTION PARTS LIST

| Mark | No. | Description | Part No. |
|---|---|---|---|
| | 1 | MAIN Assy | DWX4850 |
| | 2 | HPJK Assy | DWX4853 |
| | 3 | Rubber Foot | VEB1349 |
| | 4 | Plate | DAH3400 |
| | 5 | Gasket | DEC4059 |
| | 6 | DS Tape | DEH1143 |
| | 7 | Jog Dial | DNK7115 |
| | 8 | Dial Knob S (B) | DAA1273 |
| | 9 | Knob/PLS | DAA1324 |
| | 10 | Knob | DAA1476 |
| | 11 | Knob | DNK6769 |
| | 12 | Knob | DAC3539 |
| | 13 | Slider Knob 2 | DAC2685 |
| | 14 | Stopper/SLD | DNK6009 |
| | 15 | Stay | DNH3553 |
| | 16 | Cover | DNK7158 |
| | 17 | Cover | DNK7114 |
| | 18 | Chassis | DNK7116 |
| NSP | 19 | Name Label | See Contrast table (2) |
| | 20 | Nut (M12) | NKX2FNI |
| | 21 | Washer | WA62D095D050 |
| | 22 | Washer | YC60FAC |
| | 23 | Screw | ASZ26P050FTC |
| | 24 | Screw | BPZ30P080FTC |
| | 25 | Screw | BPZ30P100FTB |
| | 26 | Screw | PPZ30P080FTB |
| | 27 | Screw | IPZ20P060FTC |
| | 28 | Screw (M3*5) | DBA1340 |

## (2) CONTRAST TABLE

DDJ-FLX4/SXJ, SXEG, XJCN and XEGCN are constructed the same except for the following:

| Mark | No. | Symbol and Description | DDJ-FLX4/SXJ | DDJ-FLX4/SXEG | DDJ-FLX4/XJCN | DDJ-FLX4/XEGCN |
|---|---|---|---|---|---|---|
| NSP | 19 | Name Label | DAL1389 | DAL1397 | DAL1390 | DAL1398 |

# 9.3 CONTROL PANEL SECTION

• Bottom view

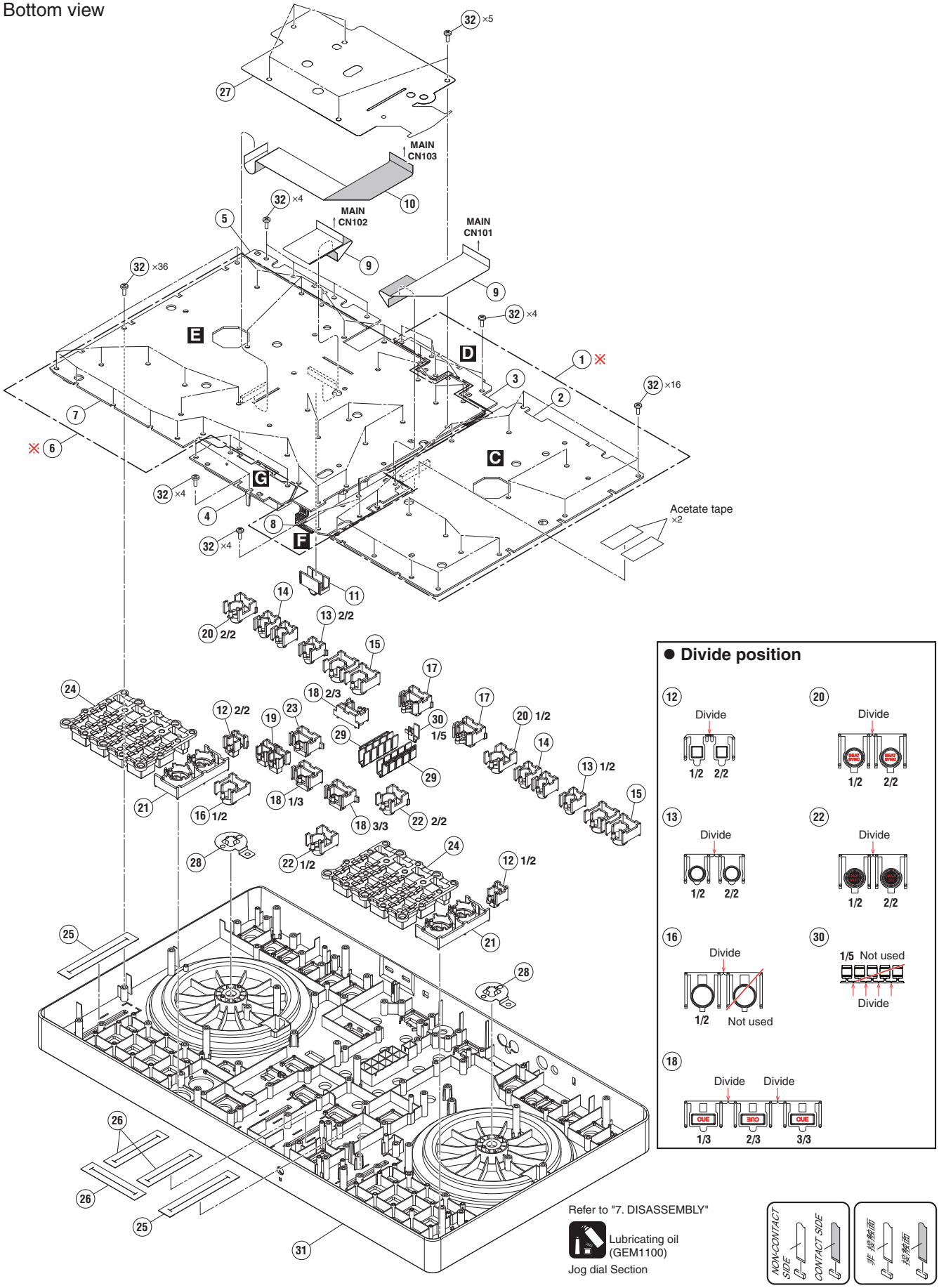

## CONTROL PANEL SECTION PARTS LIST

| Mark | No. | Description | Part No. |
|---|---|---|---|
| | 1 | 1..DECK1 Assy ※ | DWX4851 |
| NSP | 2 | 2..DECK1 | • • • • • |
| NSP | 3 | 2..BRWS | • • • • • |
| | 4 | CRFD Assy | DWX4854 |
| | 5 | HOLD Assy | DWX4855 |
| | 6 | 1..PNL2 Assy ※ | DWX4852 |
| NSP | 7 | 2..PNL2 | • • • • • |
| NSP | 8 | 2..TEMPS1 | • • • • • |
| | 9 | FFC | DDD2150 |
| | 10 | FFC | DDD1937 |
| | 11 | SW Cap | DAC2753 |
| | 12 | Button S (Black) | DAC2663 |
| | 13 | Button/TMP | DAC2845 |
| | 14 | Button/CAL | DAC3020 |
| | 15 | Button/LOP | DAC3074 |
| | 16 | Button/LOP | DAC3074 |
| | 17 | Button | DAC3151 |
| | 18 | Button | DAC3380 |
| | 19 | Button | DAC3381 |
| | 20 | Button | DAC3408 |
| | 21 | Button | DAC3418 |
| | 22 | Button | DAC3684 |
| | 23 | Button | DAC3685 |
| | 24 | Button | DEB2101 |
| | 25 | Packing/TMP | DEC3392 |
| | 26 | Sheet | DEC3795 |
| | 27 | Barrier | DEC4060 |
| | 28 | Plate/CND | DNH3137 |
| | 29 | Lens | DNK6946 |
| | 30 | Lens | DNK7124 |
| | 31 | Control Panel | DNK7117 |
| | 32 | Screw | BPZ30P080FTC |

※ The service parts of the DECK1 Assy and the PNL2 Assy are supplied with multiple boards connected by jumper leads.
The DECK1 Assy consists of DECK1 and BRWS boards connected by jumper leads. The PNL2 Assy consists of PNL2 and TEMPS1 boards connected by jumper leads.
These four boards are not supplied by itself as the service parts.

# 12. PCB PARTS LIST

*NOTES:* ● *Parts marked by "NSP" are generally unavailable because they are not in our Master Spare Parts List.*

● *The ⚠ mark found on some component parts indicates the importance of the safety factor of the part. Therefore, when replacing, be sure to use parts of identical designation.*

● *When ordering resistors, first convert resistance values into code form as shown in the following examples.*

*Ex.1 When there are 2 effective digits (any digit apart from 0), such as 560 ohm and 47 k ohm (tolerance is shown by J = 5%, and K = 10%).*

*560 Ω → 56 × $10^1$ → 561 ····· RD1/4PU 5 6 1 J*
*47 kΩ → 47 × $10^3$ → 473 ····· RD1/4PU 4 7 3 J*
*0.5 Ω → R50 ····· RN2H R 5 0 K*
*1 Ω → 1R0 ····· RS1P 1 R 0 K*

*Ex.2 When there are 3 effective digits (such as in high precision metal film resistors).*

*5.62 kΩ → 562 × $10^1$ → 5621 ····· RN1/4PC 5 6 2 1 F*

## LIST OF ASSEMBLIES

| Mark | No. | Description | Part No. |
|---|---|---|---|
| | 1 | MAIN ASSY | DWX4850 |
| NSP | 1 | PNL1 ASSY | DWM2864 |
| | 2 | DECK1 ASSY | DWX4851 |
| NSP | 3 | DECK1 | ••••• |
| NSP | 3 | BRWS | ••••• |
| | 2 | HPJK ASSY | DWX4853 |
| | 2 | CRFD ASSY | DWX4854 |
| | 2 | HOLD ASSY | DWX4855 |
| | 1 | PNL2 ASSY | DWX4852 |
| NSP | 2 | PNL2 | ••••• |
| NSP | 2 | TEMPS1 | ••••• |

## A MAIN ASSY

### SEMICONDUCTORS

| Mark | No. | Description | Part No. |
|---|---|---|---|
| ⚠ | IC | 202,211 | MM3411A33N |
| ⚠ | IC | 204,210 | MM1856A50N |
| ⚠ | IC | 207 | NJM2392M |
| ⚠ | IC | 701 | PCM1753DBQ |
| | IC | 702 | NJM4565MD |
| | IC | 703 | PCM1753DBQ |
| | IC | 704,3204 | S-80942CNMC-G9C |
| | IC | 705 | NJM4580MD |
| | IC | 706 | BH3547F |
| | IC | 708 | PCM1803ADB |
| | IC | 2901,2904 | S-80930CNMC-G80 |
| | IC | 2902 | MIMXRT1062DVJ6B@V |
| | IC | 2903 | TC7SH08FUS2 |
| | IC | 2951,2952 | TC74VHC08FK |
| | IC | 3001 | DYW2287* |
| | *Part number of the initial firmware equipped | | |
| | IC | 3002,3003,3605 | 74VHC4051AFT |
| ⚠ NSP | IC | 3202 | NJW4152GM1-AB@V |
| | IC | 3203 | S-80940CNMC-G9A |
| ⚠ | IC | 3205 | AP22615AWU@V |
| NSP | IC | 3401 | VL103R-Q4@V |
| | IC | 3402 | DYW2313* |
| | *Part number of the initial firmware equipped | | |
| | IC | 3403 | S-80927CNMC-G8X |
| | IC | 3601 | TC7SHU04FUS2 |
| | IC | 3602 | MFI343S00176@V |
| | IC | 3603 | 74VHC595FT |
| | IC | 3606 | DPO2036DBB@V |
| ⚠ | IC | 3609 | FAN23SV06PAMPX@V |
| | Q | 101,102,104-106 | HN1C01FUS1 |
| | Q | 201,205,704,710 | LTC024EEB |
| | Q | 202,206,211,701 | LSCR523UB |
| ⚠ | Q | 203,3201,3202,3208 | LP3475T1G@V |
| | Q | 207,209,213,713 | LSAR523UB |
| | Q | 224 | RN1903S1 |
| | Q | 702,705,706,711 | LSCR523UB |
| | Q | 708,717 | INC2002AC1 |
| | Q | 709,3203,3206,3207 | LTA024EEB |
| | Q | 715,3002,3003,3210 | LSCR523UB |
| | Q | 2901,3204,3215,3235 | LSAR523UB |
| | Q | 2902,3205,3217,3240 | LTC024EEB |
| ⚠ | Q | 3209,3211,3222,3223 | LP3475T1G@V |
| | Q | 3212,3218-3221,3232 | LSCR523UB |
| | Q | 3213,3214,3224,3238 | LTA024EEB |
| ⚠ | Q | 3225-3231,3233,3236 | LP3475T1G@V |
| ⚠ | Q | 3237,3604 | LP3475T1G@V |
| | Q | 3239,3253,3257,3411 | LSAR523UB |
| | Q | 3241-3245,3249,3250 | LSCR523UB |
| | Q | 3246,3252,3259,3407 | LTA024EEB |
| | Q | 3247,3260,3261,3402 | LTC024EEB |
| | Q | 3254-3256,3258,3408 | LSCR523UB |
| | Q | 3401,3404-3406,3410 | EM6K7 |
| | Q | 3403,3417,3602,3603 | LTC024EEB |
| | Q | 3409,3418 | LTA024EEB |
| | Q | 3419,3612 | LSAR523UB |
| | Q | 3601,3605-3607,3613 | LSCR523UB |
| | Q | 3608,3611 | LTC024EEB |
| | Q | 3609 | EM6K7 |
| | D | 202,203,212,215 | 1SS355L@V |
| ⚠ | D | 207-209 | RB551VM-30 |
| | D | 210 | RB551VM-30 |
| | D | 214 | MC2848-11 |
| | D | 217,702,704 | 1SS355L@V |
| | D | 705,708 | RB501VM-40 |
| | D | 3202 | RB060MM-30TF |
| | D | 3204-3213 | EZAEG2N50A |
| | D | 3214-3217,3219 | 1SS355L@V |
| | D | 3218,3233,3603 | UDZV5R6 |
| | D | 3221-3223,3226-3231 | 1SS355L@V |
| | D | 3224,3225 | UDZV5R1 |

| Mark | No. | Description | Part No. |
|---|---|---|---|
| | D | 3234-3243,3403,3601 | 1SS355L@V |
| | D | 3401,3402 | RB162MM-40TF |
| | D | 3602,3604,3607-3610 | 1SS355L@V |
| | D | 3606 | UDZV6R2 |

**MISCELLANEOUS**

| | | | |
|---|---|---|---|
| | L | 205 POWER INDUCTOR (0.22 mH) | ATH7053 |
| | L | 701,3601 CHIP SOLID INDUCTOR | XTL3010 |
| | L | 2901 SMD FERRITE BEADS | CTF1823 |
| | L | 2902 POWER INDUCTOR (4.7 uH) | ATH7047 |
| | L | 2904,3001 INDUCTOR | CTF1778 |
| | L | 2906 CHIP SOLID INDUCTOR | QTL1013 |
| | L | 3201 CHOKE COIL (3.6 uH) | CTH1479 |
| | L | 3202 CHOKE COIL (15 uH) | CTH1487 |
| | L | 3203 COIL | ATH7015 |
| | JA | 701 6.5 DIA JACK | DKN1669 |
| | JA | 702 PIN JACK(2P) | AKB7181 |
| | JA | 3201,3202 USB JACK | DKN1694 |
| | KN | 3201,3202 SUPPORT | DNH3537 |
| | S | 3601 SLIDE SWITCH | DSH1025 |
| | X | 2901 RESONATOR (24 MHz) | CSS1773 |
| | X | 3601 RESONATOR | CSS1807 |
| | CN | 101,102 31P CONNECTOR | VKN1262 |
| | CN | 103 27P CONNECTOR | VKN1258 |
| | JP | 101 PARALLEL JUMPER | PF05PG-D12A |
| ⚠ | P | 3201,3202 PROTECTOR (1 A/63 V) | DEK1097 |
| | U | 3601 BT MODULE | DWX4414 |
| | VA | 103,701-706,3601 VARISTORS | EZJZ1V270RM |

**RESISTORS**

| | | | |
|---|---|---|---|
| | R | 101-105 | RAB4CQ223J |
| | R | 125 | RC0603JR-071KL@V |
| | R | 201,204,206,756 | RC0402JR-07100KL@V |
| | R | 202,227,243,258 | RC0402JR-0710KL@V |
| | R | 214,255,3260 | RC0402JR-0712KL@V |
| | R | 215,217,731,732 | RC0402JR-0722KL@V |
| | R | 216,3339 | RC0402JR-076K8L@V |
| | R | 219,252 | RC1206JR-0710RL@V |
| | R | 224,226 | RC0805JR-071R5L@V |
| | R | 231,746,747 | RC0603JR-07270RL@V |
| | R | 245 | RC0402FR-0718KL@V |
| | R | 246 | RC0402DR-073K9L@V |
| | R | 248,259,267,309 | RC0603JR-070RL@V |
| | R | 251 | RC0603JR-0710KL@V |
| | R | 254,256,280,307 | RC0402JR-0718KL@V |
| | R | 257,265,281 | RC0402JR-0727KL@V |
| | R | 260,733,734,776 | RC0603JR-07470RL@V |
| | R | 261,303,729,730 | RC0402JR-0710KL@V |
| | R | 266,706,737,738 | RC0402JR-0747KL@V |
| | R | 268 | RC0402JR-072K7L@V |
| | R | 298,299,301,302 | RC0402JR-074K7L@V |
| | R | 701-704,714,717 | RC0402JR-0747RL@V |
| | R | 707 | RC0603DR-071K5L@V |
| | R | 708,797,2962,2965 | RC0402JR-070RL@V |
| | R | 709 | RC0603DR-0768KL@V |
| | R | 710 | RC0603DR-071K8L@V |
| | R | 711,794 | RC0603DR-073K3L@V |
| | R | 715,720,723,3117 | RC0603JR-070RL@V |
| | R | 721,838,839,841 | RC0402JR-0747RL@V |
| | R | 722,842,2905,2906 | RC0402JR-07100RL@V |

| Mark | No. | Description | Part No. |
|---|---|---|---|
| | R | 724 | RC0603DR-079K1L@V |
| | R | 728,837 | RC0603DR-07750RL@V |
| | R | 740,741 | RC0603DR-074K7L@V |
| | R | 750,751 | RC0603DR-077K5L@V |
| | R | 752,753 | RC0603DR-075K6L@V |
| | R | 755,767,782,784 | RC0402JR-0710KL@V |
| | R | 768,771,2903,2917 | RC0402JR-074K7L@V |
| | R | 772,773,791,2927 | RC0402JR-0722KL@V |
| | R | 774,775,786-789 | RC0402JR-0747KL@V |
| | R | 777 | RC0603JR-07470RL@V |
| | R | 780,781,3204,3211 | RC0603JR-07330RL@V |
| | R | 798,2907 | RC0402JR-072M2L@V |
| | R | 836 | RC0603DR-071KL@V |
| | R | 840 | RC0402JR-0722RL@V |
| | R | 843,844 | RC0603JR-0733RL@V |
| | R | 2901 | RC0805JR-070RL@V |
| | R | 2904,2911,2912,3004 | RC0402JR-0710KL@V |
| | R | 2913,3021,3302-3304 | RC0402JR-071KL@V |
| | R | 2914 | RC0402JR-073K9L@V |
| | R | 2916,3128,3143 | RC0402JR-0747KL@V |
| | R | 2918,3222,3353,3439 | RC0402JR-0710RL@V |
| | R | 2920 | RT0603DRD07180RL@V |
| | R | 2921,3020,3037,3077 | RC0402JR-0756RL@V |
| | R | 2922,3030,3031,3034 | RC0402JR-074K7L@V |
| | R | 2923,3068 | RT0603DRD07220RL@V |
| | R | 2969,2970,3080,3084 | RC0402JR-070RL@V |
| | R | 3001,3002,3006,3010 | RC0402JR-07220RL@V |
| | R | 3005,3012,3013,3033 | RC0402JR-0710KL@V |
| | R | 3007,3008,3011,3019 | RC0402JR-07100RL@V |
| | R | 3009,3116,3118,3144 | RC0402JR-07220KL@V |
| | R | 3015 | RC0402JR-073K3L@V |
| | R | 3017,3102,3103,3123 | RC0402JR-0722KL@V |
| | R | 3018,3022,3025 | RC0402JR-07220RL@V |
| | R | 3023,3024,3026,3040 | RC0402JR-07100RL@V |
| | R | 3027-3029,3032,3038 | RC0402JR-07220RL@V |
| | R | 3035,3053,3055,3058 | RC0402JR-0710KL@V |
| | R | 3036,3224,3226,3235 | RC0402JR-074K7L@V |
| | R | 3039,3044,3046,3047 | RC0402JR-07220RL@V |
| | R | 3041,3043,3048,3051 | RC0402JR-07100RL@V |
| | R | 3042,3162,3165 | RC0402JR-07180RL@V |
| | R | 3056,3057,3061,3062 | RC0402JR-07100RL@V |
| | R | 3060,3063,3071,3075 | RC0402JR-0710KL@V |
| | R | 3065,3070,3081,3082 | RC0402JR-07100RL@V |
| | R | 3066,3067,3069,3076 | RC0402JR-07220RL@V |
| | R | 3078,3079,3089,3092 | RC0402JR-0710KL@V |
| | R | 3085,3086,3088,3093 | RC0402JR-07100RL@V |
| | R | 3087,3101,3104,3115 | RC0402JR-0756RL@V |
| | R | 3090,3127,3129,3207 | RC0402JR-070RL@V |
| | R | 3098,3106,3108,3109 | RC0402JR-07100RL@V |
| | R | 3099,3100,3177,3179 | RC0402JR-0710KL@V |
| | R | 3105,3110,3112,3130 | RC0402JR-07220RL@V |
| | R | 3111,3113,3114 | RC0402JR-07100RL@V |
| | R | 3120-3122,3125,3126 | RC0402JR-07100RL@V |
| | R | 3124,3194-3197,3201 | RC0402JR-0722KL@V |
| | R | 3132-3142,3158,3166 | RC0402JR-07220RL@V |
| | R | 3145-3151,3188,3190 | RC0402JR-0756RL@V |
| | R | 3153,3628,3693,3698 | RC0603JR-070RL@V |
| | R | 3154-3156,3660 | RC0402JR-07220KL@V |
| | R | 3159-3161,3163,3164 | RC0402JR-07100RL@V |
| | R | 3167-3172,3215,3216 | RC0402JR-0747KL@V |

| Mark | No. | Description | Part No. |
|---|---|---|---|
| | R | 3173,3176,3178,3180 | RC0402JR-07220RL@V |
| | R | 3182,3184,3185,3625 | RC0402JR-07220RL@V |
| | R | 3186,3187,3189,3199 | RC0402JR-0710KL@V |
| | R | 3202,3237,3242-3249 | RC1206JR-071RL@V |
| | R | 3203,3228,3241,3278 | RC0402JR-07100KL@V |
| | R | 3205,3206,3208,3213 | RC0402JR-0722KL@V |
| | R | 3209 | RC1206JR-072R7L@V |
| | R | 3210,3277 | RC0402JR-072K2L@V |
| | R | 3212,3318,3319,3325 | RC0603JR-07330RL@V |
| | R | 3214 | RC0402FR-0727KL@V |
| | R | 3217 | RC0402FR-0733KL@V |
| | R | 3218,3251,3253,3257 | RC0402DR-076K8L@V |
| | R | 3219 | RC0402FR-071KL@V |
| | R | 3220,3420,3689 | RC0402FR-0710KL@V |
| | R | 3221,3255,3262,3264 | RC0402JR-0733KL@V |
| | R | 3223,3265,3266,3270 | RC0402JR-07100RL@V |
| | R | 3225,3238,3308,3334 | RC0402JR-070RL@V |
| | R | 3227,3233,3234,3240 | RC0402JR-0710KL@V |
| | R | 3229,3231,3232,3285 | RC1206JR-070RL@V |
| | R | 3236,3307,3309,3330 | RC0402JR-074K7L@V |
| | R | 3250,3252,3256 | RC0402DR-072K4L@V |
| | R | 3254,3259,3261,3263 | RC0402JR-0710KL@V |
| | R | 3268,3271,3274,3283 | RC0402JR-0710KL@V |
| | R | 3269 | RC0402JR-0718KL@V |
| | R | 3272,3293,3314-3316 | RC0402JR-0733KL@V |
| | R | 3273,3276,3284,3311 | RC0402JR-07100RL@V |
| | R | 3275 | RC0402DR-072KL@V |
| | R | 3279,3322-3324,3326 | RC0402JR-0722KL@V |
| | R | 3289-3291,3300,3301 | RC1206JR-070RL@V |
| | R | 3292,3313,3342,3602 | RC0402JR-07100KL@V |
| | R | 3317,3348,3407 | RC0402JR-07100RL@V |
| | R | 3328,3329,3343,3351 | RC0603JR-07330RL@V |
| | R | 3338,3350,3358,3360 | RC0402JR-070RL@V |
| | R | 3340,3341,3344,3346 | RC0402JR-0722KL@V |
| | R | 3347,3355,3356,3359 | RC0402JR-0722KL@V |
| | R | 3354 | RC0603JR-07330RL@V |
| | R | 3357,3374,3403,3413 | RC0402JR-0710KL@V |
| | R | 3361-3363,3365-3368 | RC0402JR-0722KL@V |
| | R | 3364,3370,3405,3424 | RC0402JR-070RL@V |
| | R | 3371-3373,3406,3416 | RC0402JR-0722KL@V |
| | R | 3375 | RC0402JR-0733KL@V |
| | R | 3401 | RC0402FR-07100KL@V |
| | R | 3402 | RC0402FR-0722KL@V |
| | R | 3404,3421,3423,3446 | RC0402JR-071ML@V |
| | R | 3408 | RC0402DR-0743KL@V |
| | R | 3409-3412,3417 | RC0402JR-07100RL@V |
| | R | 3414,3604,3607-3609 | RC0402JR-0710KL@V |
| | R | 3419,3422,3427-3429 | RC0402JR-0722KL@V |
| | R | 3430-3437,3449,3464 | RC0402JR-07100RL@V |
| | R | 3438,3440,3451-3453 | RC0402JR-0722KL@V |
| | R | 3441,3443,3445,3458 | RC0402JR-070RL@V |
| | R | 3444,3463,3619,3622 | RC0402JR-074K7L@V |
| | R | 3447,3455,3456,3606 | RC0402JR-071ML@V |
| | R | 3454 | RC0402JR-0710RL@V |
| | R | 3459,3469-3472,3475 | RC0402JR-070RL@V |
| | R | 3461,3462 | RC1206JR-0747RL@V |
| | R | 3467,3468,3627,3640 | RC0402JR-0722KL@V |
| | R | 3476,3603,3626,3639 | RC0402JR-070RL@V |
| | R | 3486,3618,3620,3621 | RC0402JR-07100RL@V |

| Mark | No. | Description | Part No. |
|---|---|---|---|
| | R | 3601,3605 | RC0402JR-0710ML@V |
| | R | 3610,3611,3613,3614 | RC0402JR-0756RL@V |
| | R | 3623,3624,3727 | RC0402JR-071KL@V |
| | R | 3629,3631 | RAB4CQ472J |
| | R | 3630,3632 | RAB4CQ560J |
| | R | 3633,3634,3636,3637 | RC0402JR-074K7L@V |
| | R | 3635,3638,3677 | RC0402JR-07100RL@V |
| | R | 3641,3703,3705 | RC0402JR-074K7L@V |
| | R | 3642-3644,3650,3652 | RC0402JR-0722KL@V |
| | R | 3645,3646,3648,3649 | RC0402JR-0756RL@V |
| | R | 3655-3659,3735,3736 | RC0402JR-0722KL@V |
| | R | 3669,3675,3701,3706 | RC0402JR-0710KL@V |
| | R | 3678,3679 | RC0402JR-07100KL@V |
| | R | 3680 | RC0402DR-074K7L@V |
| | R | 3687,3688 | RC0402DR-07100KL@V |
| | R | 3700 | RC0402DR-07200KL@V |
| | R | 3704,3725,3739 | RC0402JR-070RL@V |
| | R | 3707,3737 | RC0402JR-0710KL@V |
| | R | 3708-3711 | RC1206JR-071RL@V |
| | R | 3712 | RC0603JR-070RL@V |
| | R | 3722 | RC0402DR-071KL@V |
| | R | 3724 | RC0402DR-0710KL@V |
| | R | 3726 | RC0402DR-0775KL@V |
| | R | 3728 | RC0402JR-075K1L@V |
| | R | 3729 | RC0402DR-07150KL@V |
| | R | 3730 | RC0603JR-0710RL@V |
| | R | 3731 | RC0402DR-07820RL@V |
| | R | 3732 | RC0402DR-07100RL@V |
| | R | 3733 | RC0402DR-0727KL@V |
| | R | 3734 | RC0402DR-0724KL@V |
| | R | 3740 | RC0402JR-0722KL@V |
| | VR | 701 POTENTIOMETER | DCS1111 |

**CAPACITORS**

| | | | |
|---|---|---|---|
| | C | 101-103,116 | 0402B102K500CT |
| | C | 104-109,112,115 | 0402N471J500CT |
| | C | 117,118,207,734 | 0402N471J500CT |
| | C | 120-122,149,206 | 0402B102K500CT |
| | C | 201,204,243,3286 | 0603X105K250CT |
| | C | 202,264,732,733 | 0805X106K100CT |
| | C | 205,763 | 0402B472K500CT |
| | C | 211 (1 uF/10 V) | DCH1266 |
| | C | 218,235,236,242 | 0402B104K160CT |
| | C | 219,715 | 0402B473K250CT |
| | C | 220,221,769 | 0402B103K160CT |
| | C | 232,254,262,274 | 0603X105K100CT |
| | C | 234,721,731,766 | CEVW470M6R3 |
| | C | 244 | 0402N121J500CT |
| | C | 249,713,725,726 | 0402B104K160CT |
| | C | 252 (470 hF/10 V) | DCH1361 |
| | C | 257,745,2958,3202 | 0402N221J500CT |
| | C | 267,270 | CEVW471M10 |
| | C | 280,287,290,742 | 0603X105K100CT |
| | C | 701,716,722,723 | 0603B104K250CT |
| | C | 702,708,709,730 | 0402N102J500CT |
| | C | 703,710,720 | 0402N331J500CT |
| | C | 704 | 0402N561J500CT |
| | C | 705 | 0402B332K500CT |
| | C | 706,727,737,747 | 0402B103K500CT |
| | C | 707 (4.7 uF) | ACG1147 |

| Mark | No. | Description | Part No. |
|---|---|---|---|
| C | 711 | | 0603N102J500CT |
| C | 712 | | CEVW100M16 |
| C | 717,718,3623 | | 0603B222K500CT |
| C | 719,724 | | CEVW101M16 |
| C | 728,806,809,811 | | 0402B104K160CT |
| C | 735,755,761,2952 | (100 uF/16 V) | DCH1365 |
| C | 739,740,773,774 | | CEVW220M16 |
| C | 743,3601 | | 0603X105K100CT |
| C | 744,807 | (10 uF/16 V) | DCH1263 |
| C | 748,783,814,2904 | | 0402B103K500CT |
| C | 749,750 | | 0402N681J500CT |
| C | 751,752 | | 0402N181J500CT |
| C | 753 | | 0805X475K250CT |
| C | 759,760,3218 | | 0603B103K500CT |
| C | 762,2972,2979,2981 | | 0402N101J500CT |
| C | 765,804,808,810 | | 0805X106K100CT |
| C | 767,2913,2927,2961 | | 0402B102K500CT |
| C | 781,3679 | | 0603B104K250CT |
| C | 782,786,2907,2934 | | 0402N102J500CT |
| C | 784 | | CEVW331M6R3 |
| C | 812,2963 | | 0805X106K100CT |
| C | 813,2902,2903,2906 | | 0402B104K160CT |
| C | 2901,2905,2909,2919 | | 0603X475K6R3CT |
| C | 2908,2911,2912,2923 | | 0402B104K160CT |
| C | 2910,2926,2931,2932 | | 0402B103K500CT |
| C | 2915 | | 0603B473K160CT |
| C | 2916,3216,3219 | | ACE7129 |
| C | 2917,2949 | | 0805X226M100CT |
| C | 2922,2964 | | 0402X105K100CT |
| C | 2924,2928,2946,2947 | | 0603X475K6R3CT |
| C | 2925,2929,2930,2933 | | 0402B224K160CT |
| C | 2935,2936 | | 0402N5R0C500CT |
| C | 2937,2939,2953,2968 | | 0402N102J500CT |
| C | 2938,2942,2943,2948 | | 0402B224K160CT |
| C | 2940,2959,2962,2965 | | 0402B104K160CT |
| C | 2941,2945,2956,3007 | | 0402B103K500CT |
| C | 2957 | | 0402B224K160CT |
| C | 2971,2973,2976,3004 | | 0402B104K160CT |
| C | 2974,2977,2980,3232 | | 0402N102J500CT |
| C | 2978,3215 | | 0402B103K250CT |
| C | 3001,3006,3008,3009 | | 0402N101J500CT |
| C | 3002,3003,3031-3034 | | 0402B102K500CT |
| C | 3011-3013,3015,3017 | | 0402B104K160CT |
| C | 3016,3026,3027,3209 | | 0402B103K500CT |
| C | 3018,3022,3023,3048 | | 0402N471J500CT |
| C | 3019,3021,3025 | | 0402N101J500CT |
| C | 3028-3030,3041,3044 | | 0402N101J500CT |
| C | 3035,3042,3077,3252 | | 0402B104K160CT |
| C | 3036-3039,3073-3076 | | 0402B102K500CT |
| C | 3043 | | 0402B471K500CT |
| C | 3046,3047,3049-3053 | | 0402N101J500CT |
| C | 3055-3058,3062-3065 | | 0402N101J500CT |
| C | 3078-3081,3224,3225 | | 0402B102K500CT |
| C | 3204-3206,3221,3276 | (22 uF) | DCG1066 |
| C | 3207,3258 | (1000 uF/6.3 V) | DCH1362 |
| C | 3212 | | 0402N471J500CT |
| C | 3217,3254,3285,3671 | | 0402B104K250CT |
| C | 3220,3605,3608,3675 | | 0402N101J500CT |
| C | 3222,3228,3280 | | 0805X106K250CT |

| Mark | No. | Description | Part No. |
|---|---|---|---|
| C | 3223,3226,3633 | | 0402B104K500CT |
| C | 3227,3255,3257,3278 | | 0402B102K500CT |
| C | 3231,3237,3245,3256 | | 0402B103K500CT |
| C | 3233,3240,3244,3260 | | 0603X474K250CT |
| C | 3239 | | 0402N102J500CT |
| C | 3247 | | 0603B473K500CT |
| C | 3263,3265,3269,3281 | | 0603X474K250CT |
| C | 3267,3401,3404 | | 0402B104K160CT |
| C | 3268 | | 0402N221J500CT |
| C | 3277,3603,3612,3613 | | 0402B103K500CT |
| C | 3279 | (22 uF) | DCG1066 |
| C | 3402,3405,3415,3417 | | 0402B102K500CT |
| C | 3406-3408,3410,3416 | | 0402B104K160CT |
| C | 3411-3414 | | 0402N100J500CT |
| C | 3418,3602,3610,3620 | | 0402B104K160CT |
| C | 3419 | | 0603B152K500CT |
| C | 3421 | | CKSQYB475K10 |
| C | 3422,3604,3609,3624 | | 0402B102K500CT |
| C | 3606,3607 | | 0402N120J500CT |
| C | 3611 | (10 uF) | CCG1234 |
| C | 3622,3625,3636,3674 | | 0402B104K160CT |
| C | 3626-3629,3637 | | 0402B103K500CT |
| C | 3634,3635,3664,3665 | | 0402N391J500CT |
| C | 3644,3654,3669 | | 0402B102K500CT |
| C | 3650-3652,3668,3670 | | 0402B103K500CT |
| C | 3661,3666 | | 0603X105K250CT |
| C | 3672 | | 0603X225K100CT |
| C | 3676 | | 0603B334K100CT |
| C | 3677 | | 0402B104K250CT |
| C | 3678 | | 0603X225K250CT |
| C | 3680 | | 0402B103K500CT |

**PNL1 ASSY**
**Consit of**
**DECK1 ASSY (DECK1, BRWS)**
**HPJK ASSY**
**CRFD ASSY**

**B C D G**

## PNL1 ASSY

### SEMICONDUCTORS

| | | |
|---|---|---|
| IC | 1401 | DYW2314* |
| | *Part number of the initial firmware equipped | |
| Q | 1401,1403,1407,1409 | LTC124EUB |
| Q | 1402,1404,1408,1410 | LSAR523UB |
| Q | 1405,1406,1419,1420 | LSCR523UB |
| Q | 1411,1413,1415,1417 | LTC124EUB |
| Q | 1412,1414,1416,1418 | LSAR523UB |
| Q | 1421,1422 | LTC123JUB |
| Q | 1601,1602 | INC2002AC1 |
| D | 1201-1213 | MC2848-11 |
| D | 1214 | 1SS355L@V |
| D | 1401,1403-1416 | LTL17KYRN5D-P@V |
| D | 1402 | LTL17KGP5D-P@V |
| D | 1417 | RB501VM-40 |
| D | 1418-1422 | LTL17KYRN5D-P@V |

### MISCELLANEOUS

| | | |
|---|---|---|
| L | 1401,1402,1404-1406 INDUCTOR | CTF1379 |
| JA | 1601 STEREO MINI JACK | XKN3017 |

| Mark | No. | Description | Part No. |
|---|---|---|---|
| | KN 1401 | EARTH TERMINAL | AKF7002 |
| | S 1201,1205,1209,1210 | TACT SWITCH | DSG1079 |
| | S 1202-1204 | TACTILE SWITCH | DSG1153 |
| | S 1206-1208,1211 | TACTILE SWITCH | DSG1153 |
| | S 1212,1215,1216 | TACTILE SWITCH | DSG1153 |
| | S 1213,1214,1217-1221 | TACT SWITCH | DSG1079 |
| | S 1222 | ROTARY ENCODER | DSX1138 |
| | CN 1001 | 31P CONNECTOR | VKN1262 |
| | CN 1601 | L-PLUG(5P) | KM200NA5L |
| | CN 1801 | PLUG(4P) | KM200NA4 |
| | JH 1001,1201 | 5P CABLE HOLDER | B2013H02-5P@V |
| | JP 1001 | JUMPER WIRE | D20PDY0510E |
| | PC 1401,1402 | PHOTO INTERRUPTER | ITR9606/F17@V |
| | VA 1401,1402 | SMD VARISTOR | EZJZ1V80010 |
| | VA 1601,1602 | VARISTORS | EZJZ1V270RM |

**RESISTORS**

| | | | |
|---|---|---|---|
| | R 1001 | | RC1206JR-072RL@V |
| | R 1201,1471,1604,1605 | | RC1206JR-070RL@V |
| | R 1202,1203,1421,1422 | | RC0603JR-07100RL@V |
| | R 1401,1413,1423-1425 | | RC0603JR-072K2L@V |
| | R 1402,1408,1411,1412 | | RC0603JR-07470RL@V |
| | R 1403 | | RC0603JR-071K2L@V |
| | R 1404,1414,1427,1434 | | RC0603JR-0722KL@V |
| | R 1405,1415,1428,1435 | | RC0603JR-0747KL@V |
| | R 1406,1407,1610,1611 | | RC0603JR-070RL@V |
| | R 1409,1419,1430,1436 | | RC0603JR-07220RL@V |
| | R 1410,1418 | | RC0603JR-07390RL@V |
| | R 1416,1417,1456,1464 | | RC0603JR-0710KL@V |
| | R 1420 | | RC0603JR-07560RL@V |
| | R 1426,1429,1450,1453 | | RC0603JR-07470RL@V |
| | R 1431,1432 | | RC0603JR-07270RL@V |
| | R 1433,1439,1443,1448 | | RC0603JR-072K2L@V |
| | R 1437 | | DCN1187 |
| | R 1440,1444,1451,1458 | | RC0603JR-0722KL@V |
| | R 1441,1445,1452,1459 | | RC0603JR-0747KL@V |
| | R 1442,1446,1449,1454 | | RC0603JR-07220RL@V |
| | R 1447 | | RC0603DR-0727KL@V |
| | R 1455 | | RC0603DR-07220RL@V |
| | R 1457 | | RC0603JR-072K2L@V |
| | R 1460 | | RC0603JR-07100RL@V |
| | R 1462 | | RC0603JR-07220RL@V |
| | R 1465,1466,1469 | | RC0603JR-071K8L@V |
| | R 1467,1468 | | RC0603JR-0747KL@V |
| | R 1602,1603 | | RC0603JR-072K7L@V |
| | R 1606,1607 | | RC0603JR-0710KL@V |
| | R 1608,1609 | | RC1206JR-070RL@V |
| | R 1801 | | RC0603JR-070RL@V |
| | VR 1801 | VARIABLE RESISTOR | DCV1023 |

**CAPACITORS**

| | | | |
|---|---|---|---|
| | C 1002 | | CEJQ101M16 |
| | C 1201,1202,1802 | | 0603B103K500CT |
| | C 1401,1403,1603,1604 | | 0603B104K250CT |
| | C 1402 | | 0603N221J500CT |
| | C 1404 | | 0603X106K6R3CT |
| | C 1601,1602 | | CEAT471M16 |
| | C 1801 | | 0603B104K250CT |

**E F**

## PNL2 ASSY (PNL2, TEMPS1)

**SEMICONDUCTORS**

| | | | |
|---|---|---|---|
| | IC 2401 | | DYW2314* |
| | *Part number of the initial firmware equipped | | |
| | Q 2401,2403,2405,2407 | | LTC124EUB |
| | Q 2402,2404,2406,2408 | | LSAR523UB |
| | Q 2409,2411,2413,2415 | | LTC124EUB |
| | Q 2410,2412,2414,2418 | | LSAR523UB |
| | Q 2416,2417,2419-2422 | | LSCR523UB |
| | Q 2423,2424 | | LTC123JUB |
| | D 2201-2211,2213-2221 | | MC2848-11 |
| | D 2212 | | 1SS355L@V |
| | D 2401-2415,2417,2419 | | LTL17KYRN5D-P@V |
| | D 2416 | | RB501VM-40 |
| | D 2418,2422,2438,2439 | | LTL17KGP5D-P@V |
| | D 2420,2423,2424 | | LTL17KYRN5D-P@V |
| | D 2426-2428,2431,2432 | | LTL17KYRN5D-P@V |
| | D 2435,2436,2442,2445 | | LTL17KYRN5D-P@V |
| | D 2437,2441 | | LTL17KRH5D-P |
| | D 2446 | | LTL17KYRN5D-P@V |
| | D 2447,2448 | | LTL17KGP5D-P@V |

**MISCELLANEOUS**

| | | | |
|---|---|---|---|
| | L 2401,2402,2404,2406 | INDUCTOR | CTF1379 |
| | L 2407 | INDUCTOR | CTF1379 |
| | KN 2401 | EARTH TERMINAL | AKF7002 |
| | S 2201,2205-2207 | TACT SWITCH | DSG1079 |
| | S 2202-2204 | TACTILE SWITCH | DSG1153 |
| | S 2208-2210,2220 | TACTILE SWITCH | DSG1153 |
| | S 2211-2219,2223 | TACT SWITCH | DSG1079 |
| | S 2221,2224,2225 | TACTILE SWITCH | DSG1153 |
| | S 2222 | SLIDE SWITCH | DSH1058 |
| | S 2226-2233 | TACT SWITCH | DSG1079 |
| | CN 2001 | 27P CONNECTOR | VKN1258 |
| | CN 2003 | 31P CONNECTOR | VKN1262 |
| | JH 2001,2501 | 5P CABLE HOLDER | B2013H02-5P@V |
| | JP 2001 | JUMPER WIRE | D20PDY0510E |
| | JP 2002 | PARALLEL JUMPER | PF04PG-B05A |
| | PC 2401,2402 | PHOTO INTERRUPTER | ITR9606/F17@V |
| | VA 2002,2004,2006 | VARISTORS | EZJZ1V270RM |
| | VA 2201-2203,2205-2207 | VARISTORS | EZJZ1V270RM |
| | VA 2209-2212,2501-2504 | VARISTORS | EZJZ1V270RM |
| | VA 2401,2402 | SMD VARISTOR | EZJZ1V80010 |

**RESISTORS**

| | | | |
|---|---|---|---|
| | R 2001 | | RC1206JR-072RL@V |
| | R 2201,2202,2457,2458 | | RC0603JR-070RL@V |
| | R 2205,2206,2503,2504 | | RC0603DR-072K2L@V |
| | R 2207,2208,2439,2470 | | RC0603JR-07100RL@V |
| | R 2401,2411,2419,2429 | | RC0603JR-071KL@V |
| | R 2402,2408,2412,2416 | | RC0603JR-07470RL@V |
| | R 2403 | | DCN1187 |
| | R 2405,2413,2422,2433 | | RC0603JR-0722KL@V |
| | R 2406,2414,2423,2434 | | RC0603JR-0747KL@V |
| | R 2407,2415,2418,2475 | | RC0603JR-07390RL@V |
| | R 2409,2417,2426,2428 | | RC0603JR-07220RL@V |
| | R 2410,2424,2427,2446 | | RC0603JR-07560RL@V |
| | R 2420 | | RC0603DR-0727KL@V |
| | R 2421,2425,2431,2436 | | RC0603JR-07470RL@V |
| | R 2430 | | RC0603DR-07220RL@V |

| Mark | No. | Description | Part No. |
|---|---|---|---|
| | R | 2432,2442,2466,2467 | RC0603JR-0710KL@V |
| | R | 2435,2437,2445,2447 | RC0603JR-07220RL@V |
| | R | 2441,2449,2456,2465 | RC0603JR-071KL@V |
| | R | 2443,2450,2459,2468 | RC0603JR-0722KL@V |
| | R | 2444,2451,2460,2469 | RC0603JR-0747KL@V |
| | R | 2452,2509 | RC1206JR-07560RL@V |
| | R | 2453,2462,2473,2512 | RC0603JR-07560RL@V |
| | R | 2454,2463,2474,2514 | RC0603JR-07220RL@V |
| | R | 2471,2505,2506 | RC0603JR-07100RL@V |
| | R | 2476,2477 | RC0603JR-072K2L@V |
| | R | 2478-2481,2492 | RC0603JR-071K8L@V |
| | R | 2483,2485 | RC0603JR-07270RL@V |
| | R | 2486-2489 | RC0603JR-0747KL@V |
| | R | 2490 | RC0603JR-071K2L@V |
| | R | 2508 | RC0603JR-07390RL@V |
| | R | 2513 | RC0603JR-07560RL@V |
| | R | 2515 | RC0603JR-07220RL@V |
| | R | 2517-2520 | RC1206JR-070RL@V |
| | VR | 2201,2203,2205 POTENTIOMETER | DCS1096 |
| | VR | 2202,2206-2209 POTENTIOMETER | DCS1097 |
| | VR | 2204,2212 SLIDE VR | DCV1035 |
| | VR | 2210,2213 POTENTIOMETER | DCS1096 |
| | VR | 2211,2214-2217 POTENTIOMETER | DCS1097 |
| | VR | 2218,2501 VARIABLE RESISTOR | DCV1011 |

**CAPACITORS**

| | | | |
|---|---|---|---|
| | C | 2001 | CEJQ101M16 |
| | C | 2207,2223,2236,2402 | 0603B104K250CT |
| | C | 2218,2224,2237,2239 | 0603B103K500CT |
| | C | 2401 | 0603N221J500CT |
| | C | 2403 | 0603X106K6R3CT |
| | C | 2405,2502 | 0603B104K250CT |
| | C | 2503,2505 | 0603B103K500CT |