9. EXPLODED VIEWS AND PARTS LIST

NOTES:
- *Parts marked by "NSP" are generally unavailable because they are not in our Master Spare Parts List.*
- *The ⚠ mark found on some component parts indicates the importance of the safety factor of the part. Therefore, when replacing, be sure to use parts of identical designation.*
- *Screws adjacent to ▼ mark on product are used for disassembly.*
- *For the applying amount of lubricants or glue, follow the instructions in this manual. (In the case of no amount instructions, apply as you think it appropriate.)*

9.1 PACKING SECTION

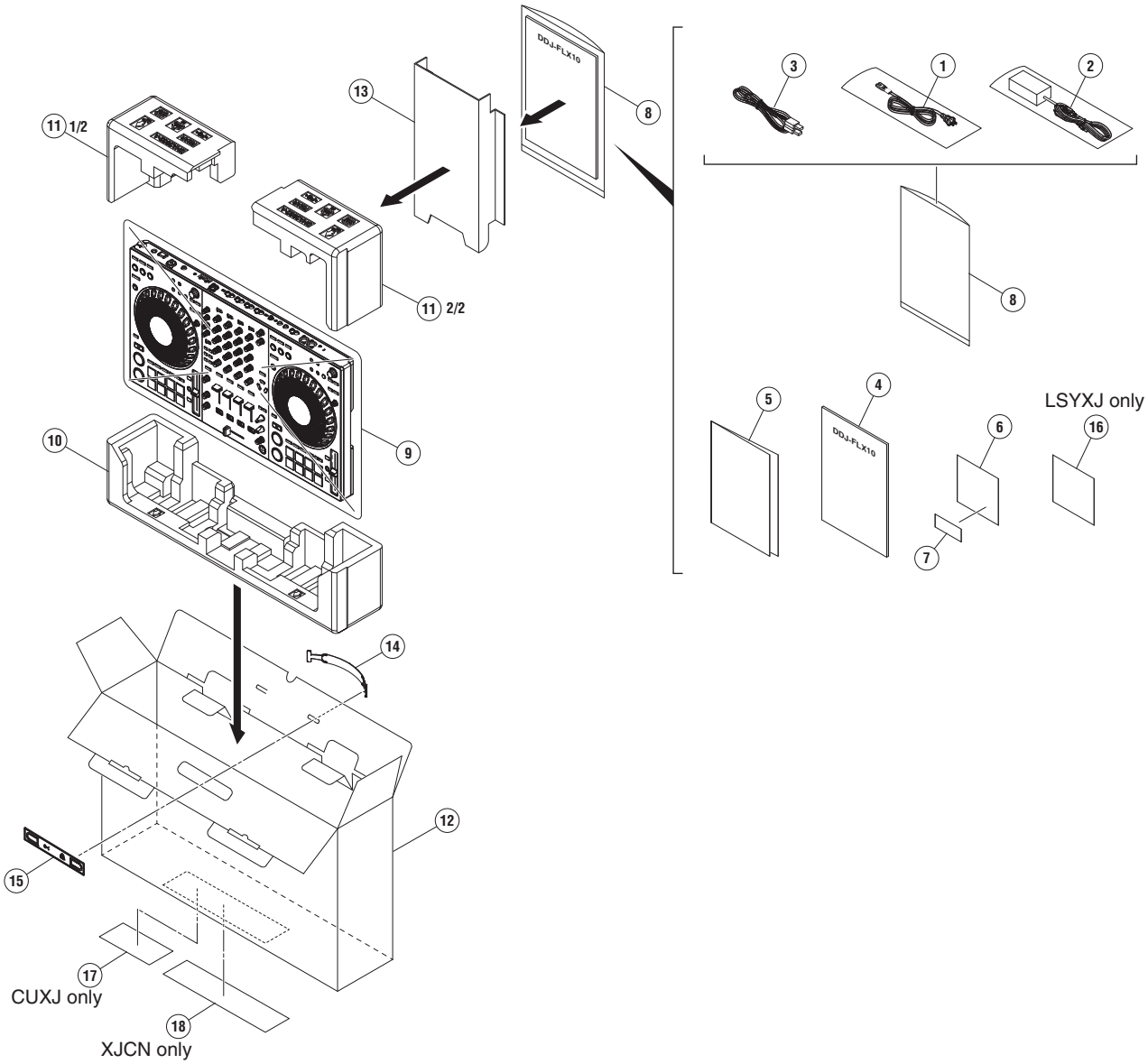

(1) PACKING SECTION PARTS LIST

Mark	No.	Description	Part No.
⚠	1	Power cord	See Contrast table (2)
⚠	2	AC adapter	DWR1599
	3	USB cable	DDE1158
	4	Quick Start Guide	See Contrast table (2)
	5	Precautions for Use	See Contrast table (2)
NSP	6	Leaflet	DRM1434
NSP	7	Serato Pitch 'n Time DJ voucher	• • • • •
NSP	8	Polyethylene Bag	AHG7117
	9	Mirror Mat (1200*1000)	DHL1169
	10	Packing Pad	DHA2031
	11	Packing Pad	DHA2032
	12	Packing Case	DHG3865
	13	Partition	DHC1114
	14	Handle	DEC3783
	15	Spacer	DEC3784
NSP	16	Warranty	See Contrast table (2)
NSP	17	Label	See Contrast table (2)
NSP	18	Label	See Contrast table (2)

(2) CONTRAST TABLE

DDJ-FLX10/LSYXJ, CUXJ and XJCN are constructed the same except for the following:

Mark	No.	Symbol and Description	DDJ-FLX10/LSYXJ	DDJ-FLX10/CUXJ	DDJ-FLX10/XJCN
⚠	1	Power cord	ADG1154	XDG3052	ADG7079
	4	Quick Start Guide	DRH1725	DRH1725	DRH1726
	5	Precautions for Use	DRH1727	DRH1727	DRH1729
NSP	16	Warranty	DRY1274	Not used	Not used
NSP	17	Label	Not used	DRW3047	Not used
NSP	18	Label	Not used	Not used	DRW3045

9.2 EXTERIOR SECTION

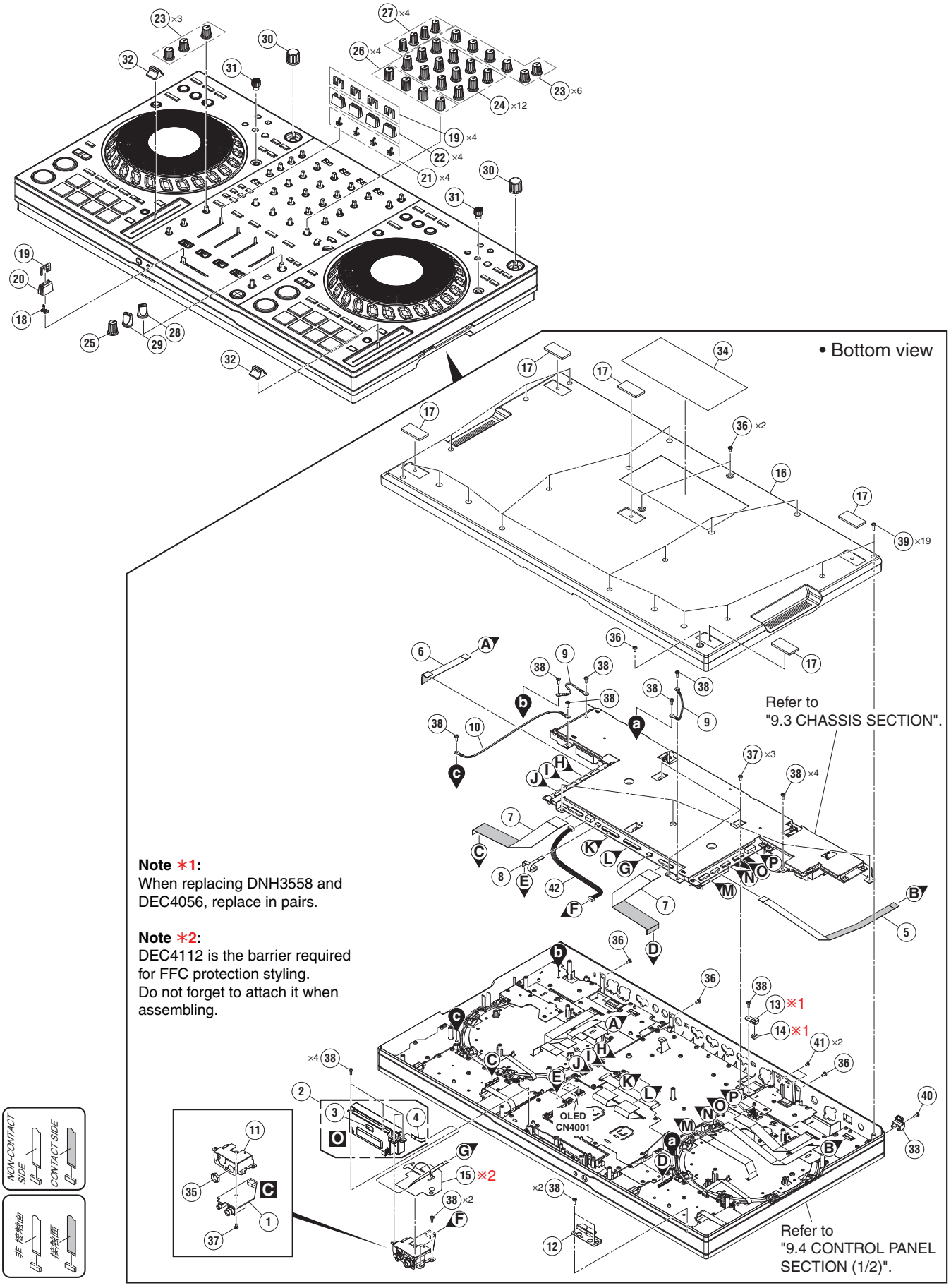

Note ✳1:
When replacing DNH3558 and DEC4056, replace in pairs.

Note ✳2:
DEC4112 is the barrier required for FFC protection styling.
Do not forget to attach it when assembling.

(1) EXTERIOR SECTION PARTS LIST

Mark	No.	Description	Part No.
	1	HPJK Assy	DWX4844
	2	1..Crossfader Service Assy	DEA1153
NSP	3	2..CRFB Assy	DWX4835
	4	2..FFC	DDD2135
	5	FFC	DDD2121
	6	FFC	DDD2154
	7	FFC	DDD2125
	8	FFC	DDD2130
	9	Earth Lead Unit	DE005VC0
	10	Earth Lead Wire	DDX1297
	11	Stay	DNH3550
	12	Stay	DNH3552
	13	Stay	DNH3558
	14	Gasket	DEC4056
	15	Barrier	DEC4112
⚠	16	Chassis	DNK7112
	17	Sheet/LEG	DEC3534
	18	Stopper	DNK6440
	19	Slider Knob 2	DAC2685
	20	Knob	DAC3238
	21	Stopper/SLD	DNK6009
	22	Knob	DAC3539
	23	Knob	DAA1432
	24	Knob	DAA1433
	25	Knob	DAA1434
	26	Knob	DAA1386
	27	Knob	DAA1409
	28	Select Knob	DAA1205
	29	FX Sel Knob	DAA1213
	30	Dial Knob	DAA1246
	31	Knob	DAA1406
	32	Knob/SLD	DNK5981
	33	Hook	DNK6755
NSP	34	Name Label	See Contrast table (2)
	35	Nut M12	DBN1018
	36	Screw	BBZ30P060FTB
	37	Screw	BBZ30P060FTC
	38	Screw	BPZ30P080FNI
	39	Screw	BPZ30P100FTB
	40	Screw	PPZ30P080FTB
	41	Screw (M3*5)	DBA1340
	42	Parallel Jumper	PF04HH-B20A

(2) CONTRAST TABLE

DDJ-FLX10/LSYXJ, CUXJ and XJCN are constructed the same except for the following:

Mark	No.	Symbol and Description	DDJ-FLX10/LSYXJ	DDJ-FLX10/CUXJ	DDJ-FLX10/XJCN
NSP	34	Name Label	DAL1393	DAL1393	DAL1394

9.3 CHASSIS SECTION

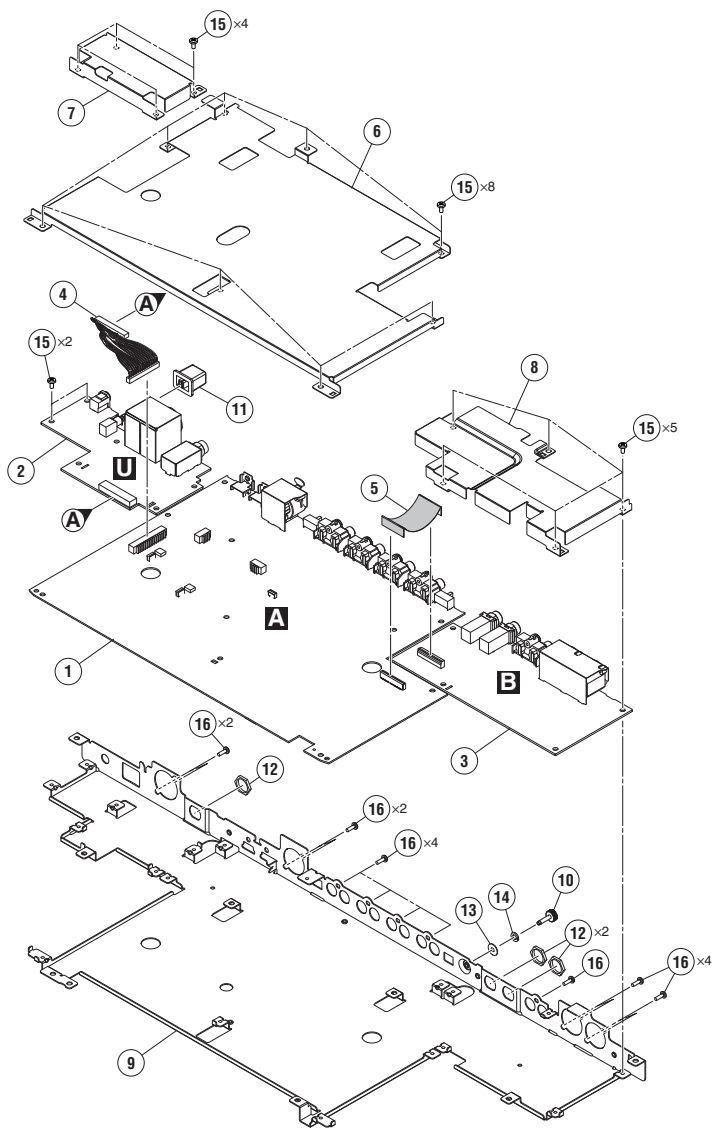

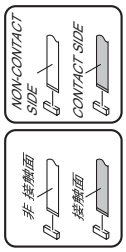

CHASSIS SECTION PARTS LIST

Mark	No.	Description	Part No.
	1	MAIN Assy	DWX4824
	2	PWSB Assy	DWX4842
	3	MOUT Assy	DWX4843
	4	Parallel Jumper	PF16HH-D10A
	5	FFC	DDD1694
	6	Shield Plate	DNH3542
	7	Shield Plate	DNH3543
	8	Shield Plate	DNH3544
	9	Stay	DNH3551
	10	Earth Terminal	DKE1015
	11	Power Knob	DAC2306
	12	Nut	NKX2FTC
	13	Spring Lock Washer	WS40FNI
	14	Washer	WA32F100Q050
	15	Screw	BBZ30P060FTC
	16	Screw	PPZ30P080FTB

9.4 CONTROL PANEL SECTION (1/2)

• Bottom view

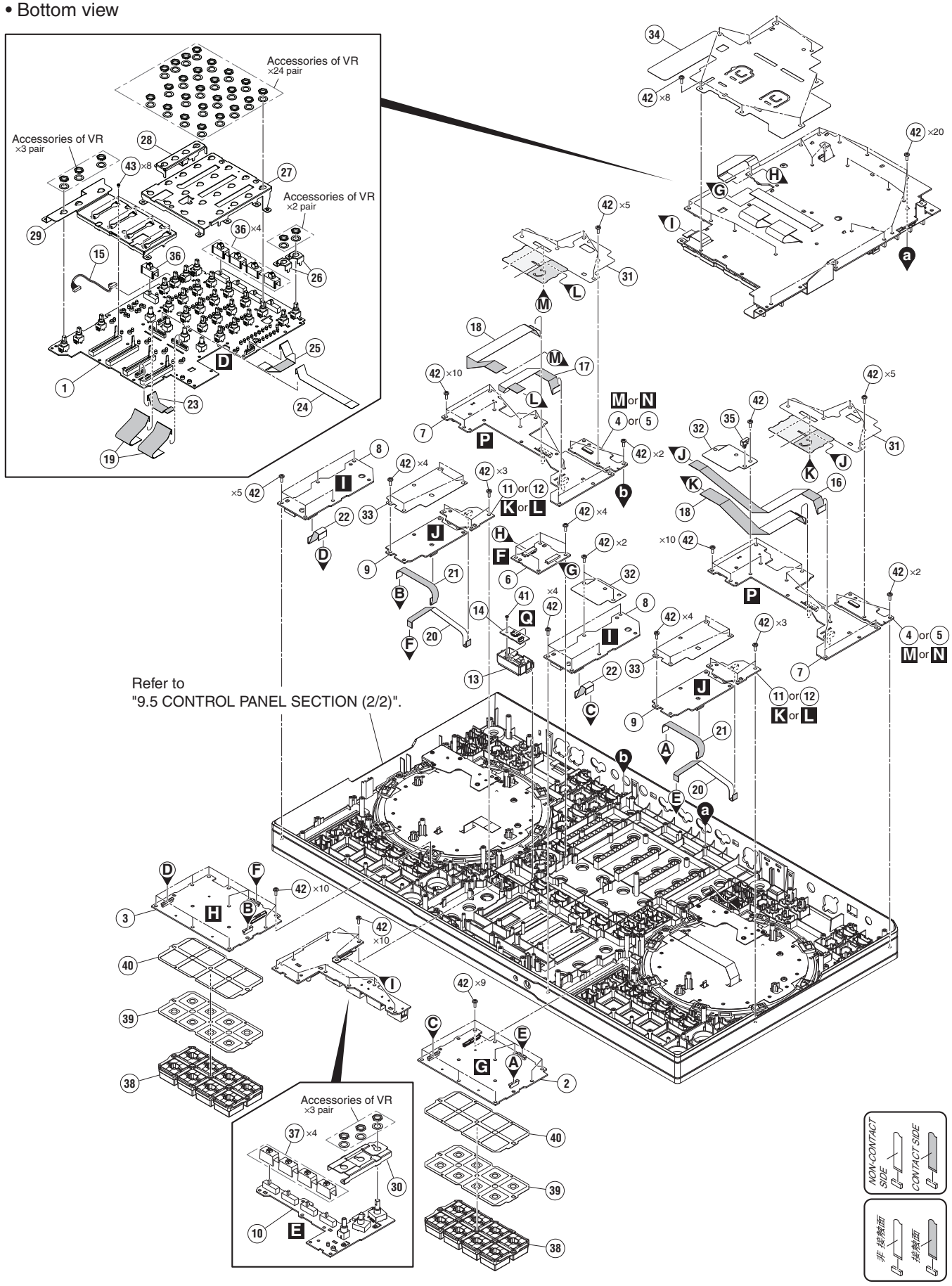

CONTROL PANEL SECTION (1/2) PARTS LIST

Mark	No.	Description	Part No.
	1	MIXB Assy	DWX4829
	2	PAD1 Assy	DWX4830
	3	PAD2 Assy	DWX4831
	4	MUT1 Assy	DWX4832
	5	MUT2 Assy	DWX4833
	6	PART Assy	DWX4834
	7	BRWS Assy	DWX4836
	8	SLDB Assy	DWX4837
	9	PLAY Assy	DWX4838
	10	CHSW Assy	DWX4839
	11	BJP1 Assy	DWX4840
	12	BJP2 Assy	DWX4841
	13	OLED Assy (Service)	DEA1084
	14	OLED Assy	DWX4825
	15	Shielded Conn-Cable	DDA1111
	16	FFC	DDD2126
	17	FFC	DDD2127
	18	FFC	DDD2128
	19	FFC	DDD1984
	20	FFC	DDD2131
	21	FFC	DDD2132
	22	FFC	DDD2133
	23	FFC	DDD1842
	24	FFC	DDD2134
	25	FFC	DDD2153
	26	Stay	DNF2039
	27	Stay	DNH3546
	28	Stay	DNH3547
	29	Stay	DNH3548
	30	Stay	DNH3549
	31	Barrier	DEC4071
	32	Barrier	DEC4072
	33	Barrier	DEC4073
	34	Barrier	DEC4074
	35	Locking Mini Clamp	DEC2439
	36	SW Cap	DAC2753
	37	Slide SW Cap (W)	DAC2401
	38	Button	DEB2075
	39	Sheet	DEC3774
	40	Spacer	DEC3775
	41	Screw	BPZ20P040FTB
	42	Screw	BPZ30P080FNI
	43	Screw	PMH20P040FTC

9.5 CONTROL PANEL SECTION (2/2)

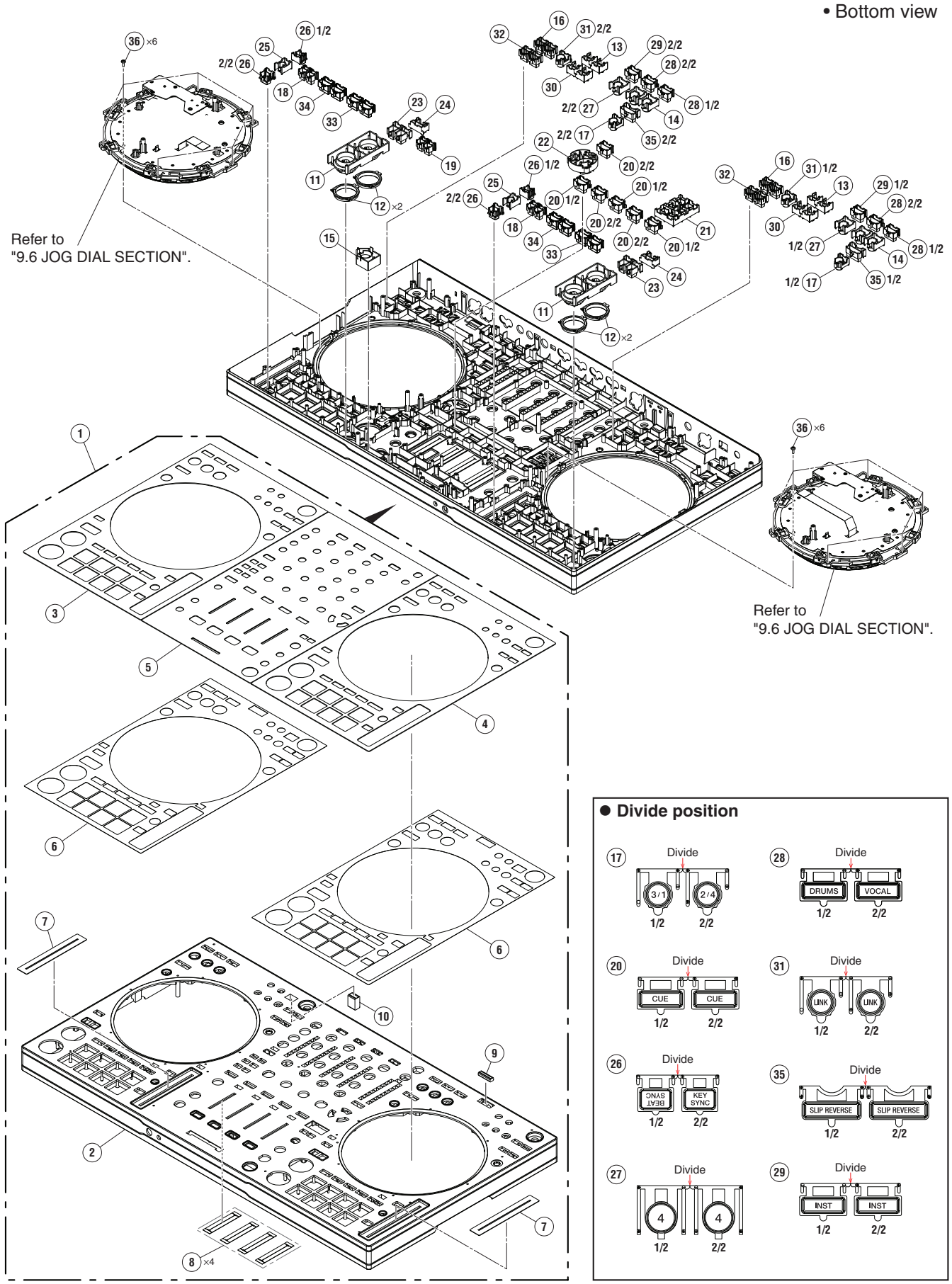

CONTROL PANEL SECTION (2/2) PARTS LIST

Mark	No.	Description	Part No.
⚠	1	1..DDJ-FLX10 Panel Service Assy	DEA1152
⚠NSP	2	2..Control Panel	DNK7111
NSP	3	2..Plate	DAH3401
NSP	4	2..Plate	DAH3402
NSP	5	2..Plate	DAH3403
NSP	6	2..DS Tape	DEH1136
	7	2..Slide Sheet 1C	DAH2404
	8	2..Sheet	DEC3795
	9	2..Gasket	DEC4061
	10	2..Gasket	DEC4062
	11	Button	DXB2189
	12	Ring Lens (PLAY)	DNK5315
	13	Button/CAL	DAC3020
	14	Button/LOP	DAC3074
	15	Button	DAC3141
	16	Button	DAC3358
	17	Button	DAC3360
	18	Button	DAC3366
	19	Button	DAC3372
	20	Button	DAC3557
	21	Button	DAC3671
	22	Button	DAC3672
	23	Button	DAC3673
	24	Button	DAC3674
	25	Button	DAC3675
	26	Button	DAC3676
	27	Button	DAC3677
	28	Button	DAC3678
	29	Button	DAC3679
	30	Button	DAC3681
	31	Button	DAC3682
	32	Button	DAC3683
	33	Button	DAC3686
	34	Button	DAC3687
	35	Button	DAC3688
	36	Screw	BPZ30P080FNI

9.6 JOG DIAL SECTION

Refer to "7. DISASSEMBLY"

Lubricating oil

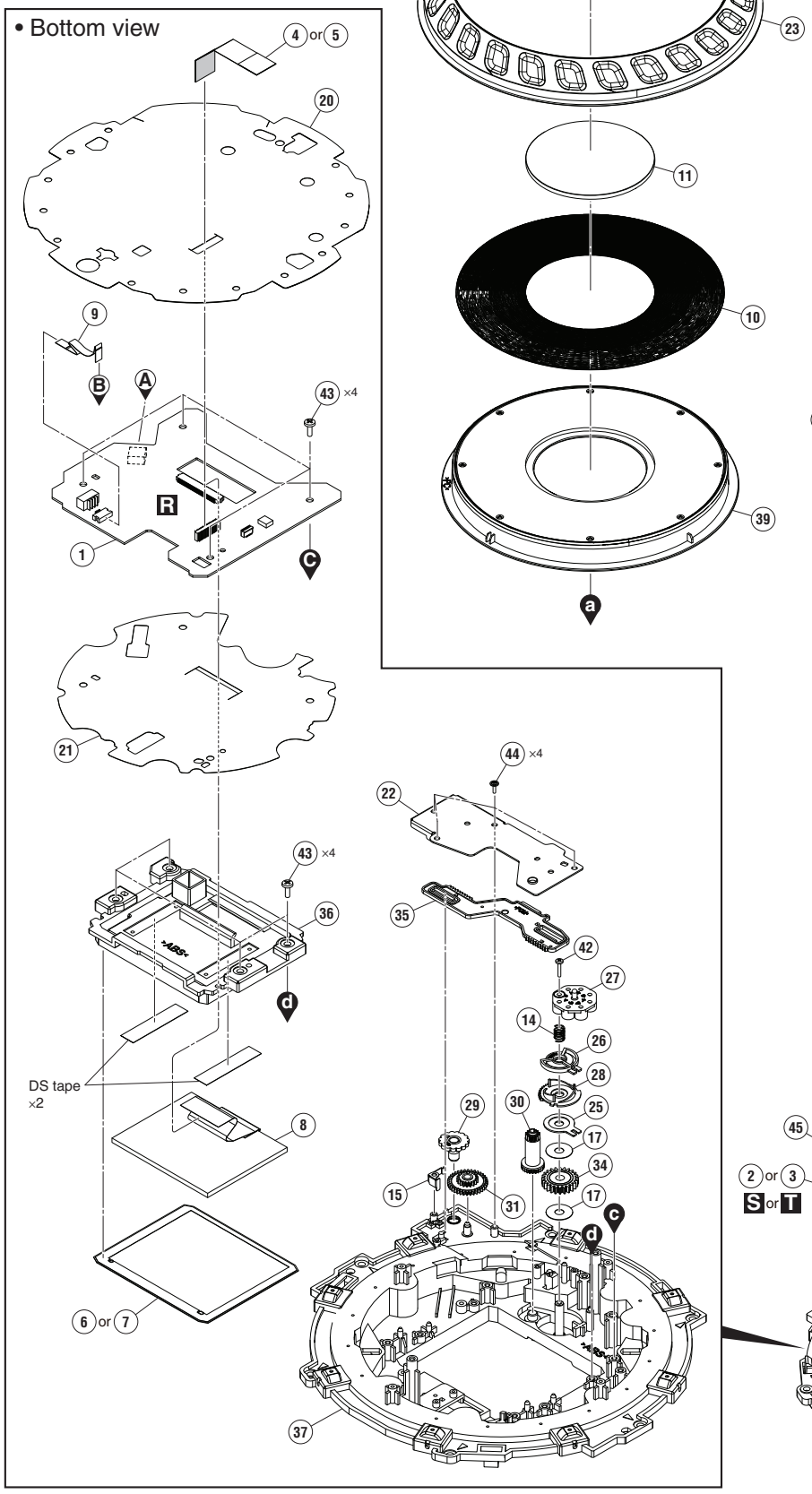

JOG DIAL SECTION PARTS LIST

Mark	No.	Description	Part No.
	1	LCDB Assy	DWX4828
	2	JOG1 Assy	DWX4826
	3	JOG2 Assy	DWX4827
	4	FFC (for Left Deck)	DDD2123
	5	FFC (for Right Deck)	DDD2124
	6	Sheet (for Left Deck)	DEC3989
	7	Sheet (for Right Deck)	DEC3990
	8	TFT LCD	DWX4567
	9	FFC	DDD1843
	10	Jog Plate	DAH2679
	11	Window	DAH3189
	12	SW Spring	DBH1681
	13	Encoder Spring	DBH1710
	14	Coil Spring/LD	DBH1798
	15	Leaf Spring/ADJ	DBK1376
	16	SW Cushion HH48/2	DEC253
	17	Washer	DEC3137
	18	Cushion/RNG	DEC3466
	19	Plate	DEC3700
	20	Barrier	DEC4070
	21	Barrier	DEC3845
	22	Plate	DNH3345
	23	Jog Dial	DNK7110
	24	SW Ring	DNK5233
	25	Smoother	DNK5237
	26	Comp Plate	DNK5243
	27	Adjust Plate	DNK5300
	28	Cam Plate	DNK5301
	29	Dial Gear	DNK5302
	30	Link Gear A	DNK5303
	31	Link Gear B	DNK5304
	32	Gear/A	DNK6143
	33	Gear/B	DNK6144
	34	Gear/LD	DNK6145
	35	Plate	DNK6748
	36	Holder	DNK7109
	37	Holder	DNK6925
	38	Sheet SW	DSX1078
	39	Jog Dial A Assy	DXA2159
	40	Stay Assy/JOG	DXB2133
	41	Roller	DXB2178
	42	Screw	BPZ20P100FTC
	43	Screw	BPZ30P080FNI
	44	Screw	IPZ20P060FTC
	45	Screw	IPZ20P080FTC
	46	Screw (FE)	DBA1265

12. PCB PARTS LIST

NOTES: ● *Parts marked by "NSP" are generally unavailable because they are not in our Master Spare Parts List.*
● *The ⚠ mark found on some component parts indicates the importance of the safety factor of the part. Therefore, when replacing, be sure to use parts of identical designation.*
● *When ordering resistors, first convert resistance values into code form as shown in the following examples.*

Ex.1 When there are 2 effective digits (any digit apart from 0), such as 560 ohm and 47 k ohm (tolerance is shown by J = 5%, and K = 10%).

560 Ω	→	*56 × 10^1*	→	*561* ····· *RD1/4PU 5 6 1 J*
47 kΩ	→	*47 × 10^3*	→	*473* ····· *RD1/4PU 4 7 3 J*
0.5 Ω	→	*R50*		····· *RN2H R 5 0 K*
1 Ω	→	*1R0*		····· *RS1P 1 R 0 K*

Ex.2 When there are 3 effective digits (such as in high precision metal film resistors).

5.62 kΩ	→	*562 × 10^1*	→	*5621* ····· *RN1/4PC 5 6 2 1 F*

Mark	No.	Description	Part No.
LIST OF ASSEMBLIES			
NSP	1	..MOTHER ASSY	DWM2859
	2	..MAIN ASSY	DWX4824
	2	..OLED ASSY	DWX4825
	2	..JOG1 ASSY	DWX4826
	2	..JOG2 ASSY	DWX4827
	1	..LCDB ASSY	DWX4828
	1	..MIXB ASSY	DWX4829
NSP	1	..PADA ASSY	DWM2860
	2	..PAD1 ASSY	DWX4830
	2	..PAD2 ASSY	DWX4831
	2	..MUT1 ASSY	DWX4832
	2	..MUT2 ASSY	DWX4833
	2	..PART ASSY	DWX4834
NSP	2	..CRFB ASSY	DWX4835
NSP	1	..SUB1 ASSY	DWM2861
	2	..BRWS ASSY	DWX4836
	2	..SLDB ASSY	DWX4837
	2	..PLAY ASSY	DWX4838
NSP	1	..SUB2 ASSY	DWM2862
	2	..CHSW ASSY	DWX4839
	2	..BJP1 ASSY	DWX4840
	2	..BJP2 ASSY	DWX4841
	2	..PWSB ASSY	DWX4842
	2	..MOUT ASSY	DWX4843
	2	..HPJK ASSY	DWX4844

Mark	No.	Description	Part No.
MOTHER ASSY			
Consists of			
MAIN ASSY			
OLED ASSY			
JOG1 ASSY			
JOG2 ASSY			
AOQR			
MOTHER ASSY			
SEMICONDUCTORS			
⚠	IC	1101,1103,1106	MM3542BF
⚠	IC	1102	BD9E302EFJ@V
	IC	1104	TPS25921AD
	IC	1105,1602,1603	S-80930CNMC-G80
⚠	IC	1107	BD9328EFJ
⚠	IC	1108	NJM2831F33
⚠	IC	1301,1302	BD9851EFV
⚠	IC	1303,1304	NJM78M15DL1A
⚠	IC	1305	LM337KVUG3
⚠	IC	1306	UA78M33IKVUG3
⚠	IC	1307	UA78M05IKVURG3
⚠	IC	1308	NJM2831F05
	IC	1601,2001	MIMXRT1062DVJ6B@V
	IC	1604,2601,2602,2605	TC74VHC08FK
	IC	1605	SN65HVD3088EDG@V
	IC	1607,1803,2003,2604	TC7SH08FUS2
	IC	1801	DYW2323*
	*Part number of the initial firmware equipped		
	IC	2201	DYW2324*
	*Part number of the initial firmware equipped		
NSP	IC	2401	OMAPL137DZKB4@V
	IC	2402	SN74AUC1G08DCK
	IC	2403,2404	W9825G6KH-6@V
	IC	2603	TC7SZU04FUS2
	IC	2606	TC7SH08FUS2
	IC	2801,2802,3001,3002	NJM4580MD
	IC	2803,2804,3003,3004	PCM1803ADB
	IC	3201,3406,3602-3604	NJM4580MD
	IC	3202	PCM1803ADB
	IC	3401	PCM1789PWR@V
	IC	3402,3403	NE5532AD
	IC	3404,3405	NJM4580DD
	IC	3601,3802	PCM1753DBQ
	IC	3803	NJM2068MD
	Q	1001,1004	2SA1576A
	Q	1002,1003,1102,1111	LTC024EEB

Mark	No.	Description	Part No.
	Q	1101,1104,1107,1109	LP3475T1G@V
	Q	1103,1508-1510,1512	LSCR523UB
	Q	1105,1106,1514,2301	RT3N22M
	Q	1108,1501,1502,1504	LSAR523UB
	Q	1110	LP3475T1G@V
	Q	1301,1304	CJL3407
	Q	1302	RSR020P05
	Q	1303	RSQ045N03
	Q	1305,1306	LTC014EEB
	Q	1307,1308,1602	RTQ040P02
	Q	1505,1507,1515-1517	LSAR523UB
	Q	1506	LTC014YEB
	Q	1511,1513,1601,1607	LTC024EEB
	Q	1518,1610,2005,3805	LSCR523UB
	Q	1603	RT3T22M
	Q	1605,2002,3806,3808	LSAR523UB
	Q	1608,1609,2007,2008	INC2002AC1
	Q	1611,2004,2006	LTC024EEB
	Q	1801,1802	LTA114EUB
	Q	3001-3004,3402-3409	INC2002AC1
	Q	3005,3006	LTA024EEB
	Q	3401	RN2903
	Q	3801,3802	2SK209
	Q	3803,3804,3813,3814	INC2002AC1
	Q	3807	LSCR523UB
	Q	3809,3811	2SCR573D3
	Q	3810,3812	2SAR573D3
	D	1101	RB060MM-30TF
	D	1102	UDZV15
	D	1103,1104,1106-1108	1SS355L@V
	D	1105	UDZV7R5
	D	1301,1302,1304,1305	LMBR140F
	D	1303	RB551VM-30
	D	1306,1307,1501-1503	1SS355L@V
	D	1309,1310,3201-3204	RB501VM-40
	D	1507,1509,1510,1513	1SS355L@V
	D	1511	DAN202UM
	D	1514,1601,3801-3804	1SS355L@V
	D	1603	SM712@V
	D	1604-1606,2002-2004	EZAEG2N50A
	D	2801-2804,3001-3004	RB548W

MISCELLANEOUS

Mark	No.	Description	Part No.
	L	1101 SMD SPL INDUCTOR (4.7 uH)	OTL8042
	L	1102,1103 SMD SPL INDUCTOR (10 uH)	CTH1584
	L	1106,1301-1304 POWER INDUCTOR (22 uH)	ATH7011
	L	1107 SMD SPL INDUCTOR	CTH1521
	L	1601,2001 SMD FERRITE BEADS	CTF1823
	L	1602,2002 POWER INDUCTOR (4.7 uH)	ATH7047
	L	1604,2004 COIL	ATH7015
	L	1801,2201 INDUCTOR	CTF1778
	L	2402 POWER INDUCTOR (22 uH)	ATH7011
	L	2403 SMD FERRITE BEADS	CTF1823
	L	3201,3202 CHIP SOLID INDUCTOR	XTL3010
	JA	1601 JACK	DKN1707
NSP	JA	1602,2001 USB JACK	DKN1694
	JA	2801,2802,3001,3002 RCA JACK	DKB1125
	S	3001,3002 SLIDE SWITCH	DSH1025
	X	1601,2001 RESONATOR (24 MHz)	CSS1773
	X	2601 CRYSTAL OSCILLATOR (22.5792 MHz)	DSS1233

Mark	No.	Description	Part No.
	CN	1001 CONNECTOR	HWW-SL1620-J1@V
	CN	1002,1014 17P CONNECTOR	DKN1511
	CN	1003,1015 FFC CONNECTOR 13PIN	DKN1545
	CN	1004,1016 FFC/FPC CONNECTOR	CKS6649
	CN	1005,1017 FFC/FPC CONNECTOR	CKS6643
	CN	1006 CONNECTOR	HWW-SR0420-J1@V
	CN	1007,1011 29P CONNECTOR	VKN1321
	CN	1008,1012 FFC/FPC CONNECTOR	CKS6645
	CN	1009,1010 FFC/FPC CONNECTOR	CKS6635
	CN	1013 23P CONNECTOR	VKN1427
	CN	3201 CONNECTOR	HWW-SR0620-J1@V
	CN	4001 CONNECTOR	VKN2038
	CN	4002 FFC/FPC CONNECTOR	CKS6476
	CN	4101,4201 04P CONNECTOR	RKN1045
		1001 SUPPORT	DNH3537
		1002 SHIELD PLATE	DNH3545
	PC	4101,4201 PHOTO INTERRUPTER	KE-2N18-15
	VA	2801-2806,3001-3008 VARISTORS	EZJZ1V270RM

RESISTORS

Mark	No.	Description	Part No.
	R	1001,1014,1132,1146	RC0402JR-074K7L@V
	R	1004,1013,1113,1134	RC0402JR-0747KL@V
	R	1007,1008,1148,1167	RC0402JR-0722RL@V
	R	1016,1018-1020,1022	RC0402JR-0756RL@V
	R	1017,1021,1024-1028	RC0402JR-070RL@V
	R	1023,1607,1804,1806	RC0402JR-0756RL@V
	R	1029,1030,1105,1162	RC0402JR-0710KL@V
	R	1101,1106,1116,1138	RC0402JR-07100KL@V
	R	1107,1115,1140,1141	RC0402JR-07220KL@V
	R	1108,1156,1521,1523	RC0402JR-0722KL@V
	R	1109,1160,1163,1627	RC0402JR-071KL@V
	R	1110	RC0402DR-076K8L@V
	R	1112,1130,1133,1135	RC0402JR-0733KL@V
	R	1117	RC0402DR-0733KL@V
	R	1118	RC0402DR-0762KL@V
	R	1120	RC0603DR-0775KL@V
	R	1121	RC0402DR-0724KL@V
	R	1122	RC0402DR-0712KL@V
	R	1123	RC0603DR-07100RL@V
	R	1124,1127,1175	RC0402DR-072K2L@V
	R	1125	RC0402DR-0722KL@V
	R	1126	RC0603DR-07560RL@V
	R	1128,1512,1514,1812	RC0402JR-073K3L@V
	R	1136,1518,1534-1536	RC0402JR-0747KL@V
	R	1137	RC0402FR-07390KL@V
	R	1139,1169,1350,1351	RC0402JR-07100KL@V
	R	1147,1339	RC0603DR-07150KL@V
	R	1149,1150	RC1206JR-070RL@V
	R	1151	RC0402DR-0720KL@V
	R	1152,1325,1353,1824	RC0402JR-070RL@V
	R	1153,1178	RC0402DR-0710KL@V
	R	1171	RC0402DR-0716KL@V
	R	1172	RC0402DR-078K2L@V
	R	1173	RC0603DR-076K8L@V
	R	1174,1360	RC0603DR-0775RL@V
	R	1176	RC0402DR-071K2L@V
	R	1177	RC0402DR-073K3L@V
	R	1301,1303,1317,3609	RC0603DR-0715KL@V
	R	1302,1304,1311,1319	RC0603DR-0710KL@V
	R	1305,1307,1326,1328	RC0603DR-0730KL@V

Mark	No.	Description	Part No.
	R	1306,1308,1334,1336	RC0603DR-0768KL@V
	R	1309	RC0603DR-07180KL@V
	R	1310	RC0603DR-0751KL@V
	R	1312,1314,1520,1525	RC0603JR-070RL@V
	R	1313	RC0603DR-075K6L@V
	R	1318	RC0603DR-07220RL@V
	R	1320,1324	RC0603JR-0733RL@V
	R	1321,1329	RC0603JR-0722RL@V
	R	1322,1323	RC0603JR-074K7L@V
	R	1331	RC0603JR-071ML@V
	R	1332,3205,3206	RC0603DR-076K2L@V
	R	1333	RC0603JR-075K1L@V
	R	1337,1338	RC0603DR-0710KL@V
	R	1340	RC0603DR-075K1L@V
	R	1341	RC0603DR-0762KL@V
	R	1342	RC0603DR-071KL@V
	R	1343	RC0603DR-0720KL@V
	R	1344	RC0603DR-073KL@V
	R	1347-1349,1357,1501	RC0402JR-0710KL@V
	R	1358,1359	RC0603DR-07620RL@V
	R	1361	RC0603DR-07120RL@V
	R	1502,1507	RC0402JR-0712KL@V
	R	1503,1505,1506,1524	RC0402JR-0710KL@V
	R	1504,1508,1533	RC0402JR-0733KL@V
	R	1515	RC0402JR-072K7L@V
	R	1516,3049-3051	RC0402JR-07470RL@V
	R	1517	RC0402JR-0716KL@V
	R	1528,1606,1608,2003	RC0402JR-07100RL@V
	R	1529,1530,1603,1604	RC0402JR-074K7L@V
	R	1532,1601,1605,1613	RC0402JR-0710KL@V
	R	1537,1540,1541,1544	RC0402JR-0722KL@V
	R	1538,1539	RC0402JR-0711KL@V
	R	1542	RC0603JR-07100KL@V
	R	1543,1550-1553	RC0603JR-073K3L@V
	R	1545,1651,1652,2039	RC0402JR-0722KL@V
	R	1546,1547,1639,2027	RC0402JR-0747KL@V
	R	1548,1549,3605,3606	RC0603JR-0747KL@V
	R	1602,1816,2222,2602	RC0402JR-07100KL@V
	R	1609,2004	RC0402JR-072M2L@V
	R	1614	RC0402JR-071K2L@V
	R	1615	RC0402JR-072KL@V
	R	1619,1634,1635,2013	RS1/16SS100J
	R	1621,1623,1624	RC0402JR-0710KL@V
	R	1629,2021	RC0402JR-073K9L@V
	R	1636,2805-2808	RC0402JR-07120RL@V
	R	1637,1643,1901,2026	RC0603JR-070RL@V
	R	1638	RC0805JR-070RL@V
	R	1640,2028,3402	RC0402JR-074K7L@V
	R	1641,1642,2029,2030	RC0402JR-075K1L@V
	R	1644-1650,1801,1805	RC0402JR-0710KL@V
	R	1807,1813,1814,1825	RC0402JR-0756RL@V
	R	1808-1810,1896,1902	RC0402JR-0710KL@V
	R	1820-1823,1827-1830	RAB4CQ560J
	R	1826,1831,1833	RC0402JR-0756RL@V
	R	1832,2847,2848,3070	RC0402JR-070RL@V
	R	1834,1835,1839,1840	RAB4CQ101J
	R	1843-1845,1848,1849	RC0402JR-0756RL@V
	R	1851,1852,1892-1894	RC0402JR-0756RL@V
	R	1855,1868,1884	RAB4CQ560J
	R	1883,2227,2228,2232	RAB4CQ101J

Mark	No.	Description	Part No.
	R	1886,1888	RC0402JR-07300RL@V
	R	1889-1891,2231	RAB4CQ560J
	R	1903,1906,1908,1911	RC0402JR-0710KL@V
	R	1904,1905	RC0402JR-07330RL@V
	R	1910,2413,2615,2656	RC0402JR-0722RL@V
	R	1913,2219,2220,2223	RC0402JR-0756RL@V
	R	1914,1915,2002,2009	RC0402JR-0710KL@V
	R	2007,2230,2407,2484	RC0402JR-07100RL@V
	R	2015,2016,2032-2038	RC0402JR-0710KL@V
	R	2019,2404,2417	RC0402JR-071KL@V
	R	2031,2402,2601,2621	RC0603JR-070RL@V
	R	2040,3447-3450	RC0402JR-0722KL@V
	R	2201,2204,2205	RAB4CQ103J
	R	2203,2207,2210-2217	RC0402JR-0710KL@V
	R	2209	RC0402JR-073K3L@V
	R	2226,2229,2234,2241	RC0402JR-0756RL@V
	R	2233,2244,2245	RAB4CQ101J
	R	2235-2238,2242,2243	RAB4CQ560J
	R	2246,2288,2300-2305	RAB4CQ560J
	R	2251,2252,2256,2306	RC0402JR-0710KL@V
	R	2253,2277-2279,2283	RC0402JR-0756RL@V
	R	2266-2268,2401,2403	RAB4CQ103J
	R	2291,2294,2295,2299	RC0402JR-0756RL@V
	R	2311,2312,2314-2318	RC0402JR-0710KL@V
	R	2313,2409,2410,2441	RC0402JR-0756RL@V
	R	2320,2405,2406,2411	RC0402JR-0710KL@V
	R	2408	RAB4CQ102J
	R	2412,2843,2845,3034	RC0402JR-0710KL@V
	R	2419,2420,2429,2430	RAB4CQ221J
	R	2421-2428,2431-2438	RC0402JR-07220RL@V
	R	2439,2440,2445-2449	RAB4CQ560J
	R	2442,2450-2455,2465	RC0402JR-0756RL@V
	R	2456,2458,2460,2471	RAB4CQ560J
	R	2457,2459	RAB4CQ470J
	R	2461-2463,2466-2468	RC0402JR-07220RL@V
	R	2464,2469,2613,2624	RS1/16SS100J
	R	2470,2478-2480,2483	RC0402JR-0756RL@V
	R	2472,2474,2631,2632	RC0402JR-07220RL@V
	R	2473,2475-2477,2485	RAB4CQ560J
	R	2481,2482	RC0402JR-0733RL@V
	R	2486	RAB4CQ560J
	R	2487-2490,2654,2655	RC0402JR-0756RL@V
	R	2603-2612,2616-2620	RC0402JR-0747RL@V
	R	2614	RT0402DRD0710RL@V
	R	2622,2643,3209,3210	RC0603JR-070RL@V
	R	2623	RT0402DRD0722RL@V
	R	2625,2637	RS1/16SS100J
	R	2626-2630,2646-2651	RC0402JR-07100RL@V
	R	2633-2636,2640-2642	RC0402JR-0747RL@V
	R	2638,2639	RC0402JR-0782RL@V
	R	2644,2645,3603	RC0402JR-07220RL@V
	R	2657	RC0402JR-0722RL@V
	R	2801-2804,3001-3004	RC0402JR-07100RL@V
	R	2809-2812,3009-3012	RC0402DR-0747KL@V
	R	2821,3021-3028	RT0603DRD071K8L@V
	R	2822-2825,3043-3046	RC0402DR-071KL@V
	R	2826-2829,3048	RC0402DR-07470RL@V
	R	2846,2849,3069,3072	RAB4CQ221J
	R	3005-3008	RC0402JR-07120RL@V

Mark	No.	Description	Part No.
	R	3013,3015,3017,3019	RC0603JR-0747RL@V
	R	3029-3032	RT0603DRD07270KL@V
	R	3033,3035,3037,3039	RC0603DR-0722KL@V
	R	3036,3038,3040,3066	RC0402JR-0710KL@V
	R	3041,3042	RC0402JR-07100KL@V
	R	3068,3219,3412	RC0402JR-0710KL@V
	R	3071,3222,3404,3804	RC0402JR-070RL@V
	R	3207,3208	RC0603DR-0733KL@V
	R	3211,3212	RC0402DR-07220RL@V
	R	3215,3218,3223,3224	RC0603JR-070RL@V
	R	3221	RAB4CQ221J
	R	3401	RC0402JR-07100RL@V
	R	3409	RC0402JR-07220KL@V
	R	3410,3411,3413,3414	RC0402JR-0751KL@V
	R	3415-3422,3607,3608	RC0603DR-074K3L@V
	R	3423-3430	RC0603DR-0712KL@V
	R	3431-3438	RC0603DR-072K7L@V
	R	3439-3446	RC0805FR-07560RL@V
	R	3451-3454	RC0805FR-07270RL@V
	R	3459-3462,4001-4005	RC0402JR-0722KL@V
	R	3463-3470	RC0603FR-07180RL@V
	R	3471-3478	RT0603DRD075K6L@V
	R	3479-3482	RT0603DRD072K7L@V
	R	3483,3484,3493,3494	RT0603DRD072KL@V
	R	3485-3492	RT0603DRD076K8L@V
	R	3495-3502	RC0402DR-07470RL@V
	R	3503,3504	RC0603DR-07680RL@V
	R	3604,3813	RAB4CQ220J
	R	3610	RC0603DR-0715KL@V
	R	3611,3612,3816,3817	RC0603DR-073K3L@V
	R	3613-3620,3818,3819	RC0603DR-0711KL@V
	R	3621-3628	RC0603DR-0736KL@V
	R	3629-3636	RC1206JR-071K5L@V
	R	3811,3812,4006	RC0402JR-070RL@V
	R	3820,3821	RC0603DR-072K4L@V
	R	3822,3823	RC0402JR-071ML@V
	R	3824,3825	RC0402JR-0718KL@V
	R	3826,3827	RC0805JR-0768RL@V
	R	3828-3831	RC0603JR-073K3L@V
	R	3832-3835	RC0402DR-071KL@V
	R	3836-3839	RC0402DR-071K8L@V
	R	3840-3847	RC0805JR-0722RL@V
	R	3848,3849	RC0603JR-0718KL@V
	R	4101,4102,4201,4202	RC0603JR-07100RL@V
	R	4103,4203	RC0603JR-0782RL@V
	Other Resistors		RS1/4SA###J

CAPACITORS

Mark	No.	Description	Part No.
	C	1007,1015,1021,1022	0402B104K250CT
	C	1008-1012,1016,1020	0402B104K160CT
	C	1023,1059,1101,1102	0805X106K160CT
	C	1024,1025,1028,1030	0402B104K160CT
	C	1032,1035-1037,1040	0402B104K160CT
	C	1041,1045,1048	0402B104K160CT
	C	1043,1133,1165,1347	0402B104K250CT
	C	1050-1052,1055,1057	0402B104K160CT
	C	1058,1060,1062	0402B104K160CT
	C	1064-1068,1105,1107	0402B104K160CT
	C	1076,1078,1106,1115	0603B104K250CT
	C	1077,1079,1183,1232 (0.1 uF)	ACE7100
	C	1104,1148,1151,1192	0805X106K160CT
	C	1108	0402B104K500CT
	C	1109-1111,1137,1138	0402B102K500CT
	C	1113 (220 uF/25 V)	DCH1341
	C	1117,1118,1122,1124	0402B104K160CT
	C	1119,1136,1177,1383	0603B104K250CT
	C	1120	0603B153K500CT
	C	1121,1128,1505,1506	0402B103K250CT
	C	1123,1334,1339	0402B682K500CT
	C	1125,1140,1141,1162	0402B104K160CT
	C	1126	0402N821J500CT
	C	1127	0402N391J500CT
	C	1132,2801,2803,3001	0603N102J500CT
	C	1135,1172,1173,1188	0402N102J500CT
	C	1139,1142	1206X226K160CT
	C	1143	0402B222K500CT
	C	1144,1147,1371,1372	0805X106K100CT
	C	1145 (0.1 uF)	ACE7113
	C	1146,1160,1161,1175	0402B103K160CT
	C	1149,1181,1182,1236 (100 uF/16 V)	DCH1365
	C	1152,1153,2472,3410 (1 uF)	ACE7129
	C	1154,1155,1381,1382 (220 uF/16 V)	DCH1368
	C	1158	CC0402KRX7R7BB104
	C	1159,1197,1198,1206	0402B102K500CT
	C	1163,1166,1174,1176	0402B104K160CT
	C	1169,1170,1214,1223	0402N101J500CT
	C	1184 (4700 pF)	ACE7115
	C	1186,1411,1679,2063	0402B103K500CT
	C	1190,1213,1218,1301	0402B103K160CT
	C	1194,1204,1314,1323	0805X106K160CT
	C	1195,1196,1201-1203	0402B104K160CT
	C	1205,1208,1209,1222	0402B104K160CT
	C	1207	CC0603KRX7R9BB153
	C	1211,1303	0402X105K160CT
	C	1212	0603N222J500CT
	C	1217,1357,1358,1374	0402N102J500CT
	C	1221,1225,1316,1318	0402B102K500CT
	C	1224,1228,1342,1343	0402B104K160CT
	C	1227,1230,1231,1625	0603X106K6R3CT
	C	1229,1410	0603X225K100CT
	C	1233 (47 uF/16 V)	CCH1961
	C	1302,1373	0402X474K250CT
	C	1304,1394,1397	0603X334K160CT
	C	1305	0402N680J500CT
	C	1306,2805-2812	0402N221J500CT
	C	1309	0603B223K500CT
	C	1310	0402B332K500CT
	C	1312,1329	0805X226M250CT
	C	1313,1330	0805X226M160CT
	C	1315,1327,1344,1345	0805X106K250CT
	C	1317,1319	0402N561J500CT
	C	1320,1322,1363,1364	0402B102K500CT
	C	1321,1324,1325,1328	0603X105K250CT
	C	1331,1332,1335,1336	0603X105K250CT
	C	1340,4003	0805X475K250CT
	C	1346	0402N271J500CT
	C	1348,1362,3420	0402B104K250CT
	C	1349,1824,1826,1827	0402N471J500CT
	C	1350,1351	0805X106K250CT

Mark	No.	Description	Part No.
C	1353-1355		0402X105K250CT
C	1356,1367,1368,1624		0402X105K100CT
C	1359,1360,1369,1370		0603X105K250CT
C	1361,1399,1401,1408		0402B104K160CT
C	1365,1366,1395,1396 (100 uF/35 V)		DCH1366
C	1375,1378,1380,1388		0402N102J500CT
C	1384,3405,4102,4103		0603B103K500CT
C	1385,1386,1403,1404		0402N101J500CT
C	1389,1398,1400,1405		0402N102J500CT
C	1390,1391,2819-2822		0603B104K250CT
C	1402,2407,3409,3416 (0.1 uF)		ACE7100
C	1407,1421,1503,1607		0402N102J500CT
C	1409,1422,1501,1626		0402B103K160CT
C	1414,1417 (100 uF/16 V)		DCH1365
C	1415 (0.47 uF)		ACE7114
C	1416,1429,1430,3408		0805B105K500CT
C	1419		0805X106K160CT
C	1420,1616,2442,2447		0402N101J500CT
C	1504,1507,3017-3020 (220 uF/16 V)		DCH1368
C	1601,1603-1605		0402B104K160CT
C	1602,1608,1609,1617		0603X475K6R3CT
C	1610-1613,1621,1622		0402B104K160CT
C	1615		0603B473K160CT
C	1618,1619,1654,2010		0805X226K6R3CT
C	1620,1627,1662,1673		0402B102K500CT
C	1628,1630,1648,1649		0603X475K6R3CT
C	1629,1631-1635		0402B224K160CT
C	1636,1650,2012,2039		0402B103K160CT
C	1637,1638,2015,2023		0402N5R0C500CT
C	1639-1645,1647,1651		0402B224K160CT
C	1646,2035,3613,3819		0603X106K6R3CT
C	1655,1658-1660,2017		0402B224K160CT
C	1661,2001,2002,2006		0603X475K6R3CT
C	1663-1665,1669,1671		0402B104K160CT
C	1666,2014,2054,2402		0402X105K100CT
C	1667,2055,2454,2455		0805X106K100CT
C	1668,1670		0603X106K100CT
C	1672,1693,1828,1834		0402B104K160CT
C	1677,2062		0603X105K500CT
C	1680,1801-1816,2051		0402B102K500CT
C	1830-1833,2201-2204		0402N471J500CT
C	2003-2005,2007-2009		0402B104K160CT
C	2011,2043		0805X226K6R3CT
C	2013,2019,2020,2037		0603X475K6R3CT
C	2018,2052,2053,2056		0402B104K160CT
C	2021,2022,2024-2034		0402B224K160CT
C	2036,2040,2044		0402B224K160CT
C	2038,2050		0603X475K6R3CT
C	2047-2049		0402B224K160CT
C	2057,2072,2262,2445		0402B104K160CT
C	2058,2064,2229-2244		0402B102K500CT
C	2207-2209,2211		0402N471J500CT
C	2213-2228,2245-2261		0402N471J500CT
C	2404 (220 uF/6.3 V)		DCH1367
C	2411,2413-2415,2417		0402B103K160CT
C	2416,2418,2420,2422		0402B102K500CT
C	2419,2421,2423,2425		0402B103K160CT
C	2424,2426,2428,2430		0402B102K500CT
C	2427,2429,2431,2433		0402B103K160CT

Mark	No.	Description	Part No.
C	2432,2434,2436,2438		0402B102K500CT
C	2435,2437,2439,2441		0402B103K160CT
C	2440,2449		0402B102K500CT
C	2443,2458-2471,2603		0402B103K160CT
C	2444,2446,2621		0402X105K100CT
C	2448,2456,2457,2602		0402B104K160CT
C	2604,2611-2614,2618		0402N102J500CT
C	2605,2608,2609,2617		0402N101J500CT
C	2606,2607,2615,2616		0402B104K160CT
C	2610,2619,2855,2856		0402B103K160CT
C	2620,2622,2842,2844		0402B104K160CT
C	2802,2804,3002,3004		0603B104K500CT
C	2817,2818,3023,3029		CEVW470M25
C	2823-2826,3042-3045		0402N181J500CT
C	2827-2830,2839,2840		CEVW100M16
C	2835,2836,2861,2862		CEVW470M6R3
C	2845,2848,3047-3050		CEVW100M16
C	2846,2847,2849,2850		0402B104K160CT
C	2851-2854,3039,3040		0402N102J500CT
C	2857,2858,3064,3066		0402B104K160CT
C	3003		0603N102J500CT
C	3005-3012		0402N221J500CT
C	3013-3016		0402B472K500CT
C	3021,3022,3026,3027 (0.012 uF)		ACE7125
C	3024,3025,3028		0603B104K250CT
C	3030-3034,3205,3206		0603B104K250CT
C	3035-3038 (3300 pF)		DCG1049
C	3041,3055,3077,3078		0402B103K160CT
C	3056,3057,3083,3084		CEVW470M6R3
C	3060,3062,3067,3070		CEVW100M16
C	3068,3069,3071,3072		0402B104K160CT
C	3073-3076,3217,3219		0402N102J500CT
C	3079,3080,3213,3214		0402B104K160CT
C	3082		0805B105K250CT
C	3201,3202		0402N471J500CT
C	3203,3204,3403,3412		0402N101J500CT
C	3207,3208		CEVWNP100M35
C	3209,3211,3215,3223		CEVW100M16
C	3212,3218,3221,3807		0402B103K160CT
C	3216,3220,3423,3614		0402B104K160CT
C	3401,3402 (100 uF/35 V)		DCH1366
C	3404,3413,3605,3617		0402N102J500CT
C	3411,3419 (220 uF/16 V)		DCH1368
C	3415,3455,3459,3462		0603B104K250CT
C	3418 (1 uF)		ACE7129
C	3422		CEVW100M16
C	3434,3440-3447		0402N101J500CT
C	3435		0603X105K250CT
C	3436-3439		0603N331J500CT
C	3448-3451		0603B104K500CT
C	3452-3454,3456,3457		0402N101J500CT
C	3460,3461,3463,3468		0402N101J500CT
C	3465,3471,3472,3603		0603B104K250CT
C	3469,3619,3620,3829		0402N101J500CT
C	3601,3615,3616,3804		CEVW470M6R3
C	3618,3817,3823,3824		0402N102J500CT
C	3621,3622,3629-3632		0603B104K250CT
C	3623,3624		CEVW101M25
C	3625-3628,3633-3636		0402N330J500CT
C	3809,4004,4006		0603B104K250CT

Mark	No.	Description	Part No.
	C	3820,3827,3828	0402B104K160CT
	C	3821,3822	CEVW470M6R3
	C	3825,3826	0402N121J500CT
	C	3830,4007	0402N101J500CT
	C	3835-3838,4001	0402B104K160CT
	C	3841	0402N102J500CT
	C	4002 (10 uF)	CCG1236
	C	4005	0805X105K250CT
	C	4101,4201	0603X105K100CT
	C	4202,4203	0603B103K500CT

SUB2 ASSY
Consists of
CHSW ASSY
BJP1 ASSY
BJP2 ASSY
PWSB ASSY
MOUT ASSY
HPJK ASSY

B C E I J S

SUB2 ASSY

SEMICONDUCTORS

	IC	9601	NJM4580MD
	Q	9301	LSCR523UB
	Q	9601-9604	2SK209
	Q	9701-9706,9713-9720	INC2002AC1
	D	9301-9308	1SS355VM
	D	9309	LTL17KTBP5D@V
	D	9801-9804	DF2B18FU

MISCELLANEOUS

	JA	9601 DC POWER JACK	DKN1649
	JA	9602 XLR SOCKET	DKB1124
	JA	9603,9704,9705 6.5 DIA JACK	DKN1669
	JA	9701,9702 CANON CONNECTOR	DKB1093
	JA	9703 RCA JACK	DKB1125
	JA	9801 STEREO MINI JACK	XKN3017
	JA	9802 6.5 DIA JACK	DKN1669
	KN	9301,9302 EARTH TERMINAL	AKF7002
	S	9301-9304 SLIDE SWITCH	DSH1058
	S	9305 ROTARY ENCODER	DSX1137
	S	9306,9401-9403 TACT SWITCH	DSG1079
	S	9307 ROTARY SWITCH	DSG1144
	S	9501-9503 TACT SWITCH	DSG1079
	S	9601 PUSH SW	ASG1102
	CN	9301 15P CONNECTOR	VKN1275
	CN	9401,9501 7P CONNECTOR	VKN1238
	CN	9601 CONNECTOR	HWW-R1620-J1@V
	CN	9701 23P CONNECTOR	VKN1254
	CN	9801 CONNECTOR	HWW-R0420-J1@V
		9801 MIC SHIELD	DNF1849
		9802 SHIELD CASE	DNF2043
		9803 CANON SHIELD	DNF1789
		9804-9806 PHONE SHIELD	DNF1875
		9807 SHIELD CASE	DNF2088
⚠	P	9601 PROTECTOR (4.000 A/32 V)	DEK1104
	VA	9601-9608,9701-9713 VARISTORS	EZJZ1V270RM
	VA	9715,9802,9803 VARISTORS	EZJZ1V270RM

Mark	No.	Description	Part No.

RESISTORS

	R	9303	RC0603JR-07220RL@V
	R	9304	RC0603JR-07390RL@V
	R	9305	RC0603JR-07470RL@V
	R	9306,9310-9315	RC0603JR-07750RL@V
	R	9307	RC0603JR-071K2L@V
	R	9308	RC0603JR-072KL@V
	R	9309	RC0603JR-074K7L@V
	R	9316,9318	RC0603JR-072K2L@V
	R	9317	RC0603JR-0747KL@V
	R	9601-9609	RC0603JR-07100RL@V
	R	9610-9615,9628,9629	RC0603DR-073K3L@V
	R	9616,9618,9621,9623	RT0603DRD071K5L@V
	R	9617,9619,9625,9627	RT0603DRD074K7L@V
	R	9620,9622	RC0603DR-07820RL@V
	R	9624,9626	RC0603JR-07150RL@V
	R	9630,9631,9802,9804	RC0603JR-070RL@V
	R	9701-9704	RC0603DR-072K2L@V
	R	9707-9710,9729,9730	RC0603JR-07100KL@V
	R	9711-9716,9743-9746	RC0603JR-0718KL@V
	R	9717,9718,9721,9724	RC0603JR-0733RL@V
	R	9725,9728,9747,9750	RC0603JR-0733RL@V
	R	9735-9738	RC0603DR-0722KL@V
	R	9739-9742	RC0603JR-07100KL@V
	R	9748,9749,9752,9753	RC0603JR-0718KL@V
	R	9751,9754-9758	RC0603JR-0733RL@V
	R	9801,9803	RC0603JR-071KL@V
	VR	9301 POTENTIONETER	DCS1065

CAPACITORS

	C	9301,9302,9306,9308	0603B104K250CT
	C	9303,9401,9402,9501	0603B103K500CT
	C	9304	0603X105K250CT
	C	9305,9307,9602,9606	0603N102J500CT
	C	9502,9607,9608,9641	0603B103K500CT
	C	9601,9603,9604,9647	0603B104K250CT
	C	9605,9639,9640	0603N101J500CT
	C	9609,9618,9621	0603B104K500CT
	C	9610 (1000 pF)	ACE7120
	C	9611 (0.1 uF)	ACE7113
	C	9617,9620,9627-9634	0603N102J500CT
	C	9635,9636	0603N471J500CT
	C	9637,9638,9645,9646	0603N821J500CT
	C	9642,9713,9715,9717	0603B103K500CT
	C	9643,9644	0603N331J500CT
	C	9648	0603B104K250CT
	C	9649,9650	CEANP100M35
	C	9651,9652	CEAT470M25
	C	9701-9704 (220 uF/25 V)	DCH1358
	C	9705,9706,9719-9722	CEJQ101M16
	C	9707-9712,9723-9726	ACE7099
	C	9727,9807,9808	0603B103K500CT
	C	9801,9802	CEANP471M6R3
	C	9803-9806	0603B223K500CT

Mark	No.	Description	Part No.

D MIXB ASSY

SEMICONDUCTORS

IC	6001-6004		TC74HC4051AF
IC	6005		NJM2903M
Q	6001-6008		LTC123JUB
Q	6009		LTA143EUB
Q	6010,6012,6014,6016		LTC124EUB
Q	6011,6013,6015,6017		2SB1689
Q	6018,6020		LTC124EUB
Q	6019,6021		2SB1689
Q	6022-6030		LSCR523UB
D	6001-6045		1SS355VM
D	6046,6048,6059,6070		LTL17KRH5D-P
D	6047,6057,6058,6068		SLR343WBN2PT(Z)@V
D	6049-6052,6060-6063		LTL17KSL5D-P
D	6053-6056,6064-6067		LTL17KGH5D-P
D	6069,6079		SLR343WBN2PT(Z)@V
D	6071-6074,6081-6084		LTL17KSL5D-P
D	6075-6078,6085-6088		LTL17KGH5D-P
D	6080,6091,6102,6116		LTL17KRH5D-P
D	6089,6090,6092-6095		LTL17KSL5D-P
D	6096-6099,6107-6110		LTL17KGH5D-P
D	6100,6101,6103-6106		LTL17KSL5D-P
D	6111,6117		LTL17KSL5D-P
D	6112-6115		LTL17KTBP5D@V

MISCELLANEOUS

S	6001-6005,6008-6012	TACT SWITCH	DSG1079
S	6006,6007,6013	SLIDE SWITCH	DSH1058
S	6014,6019	SLIDE SWITCH	DSH1058
S	6015-6018	TACT SWITCH	DSG1079
CN	6001,6002	29P CONNECTOR	VKN1260
CN	6003	CONNECTOR	HWW-R0620-J1@V
CN	6004-6006	15P CONNECTOR	VKN1246

RESISTORS

R	6001-6008,6012		RC0603JR-0722KL@V
R	6009-6011,6015,6018		RC0603JR-0710KL@V
R	6013		RC0603JR-071KL@V
R	6014		RC0603JR-071ML@V
R	6016,6019,6022,6025		RC0603JR-07330RL@V
R	6017,6020,6023,6026		RC0603JR-0756KL@V
R	6021,6024,6027,6030		RC0603JR-0710KL@V
R	6028,6031,6033-6044		RC0603JR-07330RL@V
R	6029,6032		RC0603JR-0756KL@V
R	6045,6046		RC0603JR-07300RL@V
R	6047-6054		RC0603JR-07240RL@V
R	6055-6081		RC0603JR-0747KL@V
R	6082-6090		RC0603JR-072K2L@V
R	6091-6102		RC0603JR-0722RL@V
VR	6001-6004	SLIDE VR	DCV1035
VR	6005,6006,6011	ROTARY VR	DCS1116
VR	6007,6008	POTENTIOMETER	DCS1110
VR	6009,6010,6012-6014	ROTARY VR	DCS1117
VR	6015-6018,6020-6023	ROTARY VR	DCS1116
VR	6019,6024,6029	ROTARY VR	DCS1117
VR	6025-6028,6030-6033	ROTARY VR	DCS1116

CAPACITORS

C	6001,6046		CEJQ470M6R3
C	6002,6048,6049		0603N102J500CT
C	6003,6031-6034,6039		0603B104K250CT
C	6004-6030,6035-6038		0603N471J500CT
C	6040,6042,6044,6052		0603N471J500CT
C	6041,6043,6047,6050		0603B104K250CT
C	6045		CEJQ101M16
C	6051,6053-6088		0603B104K250CT
C	6091-6102		0603N102J500CT

PADA ASSY
Consists of
PAD1 ASSY
PAD2 ASSY
MUT1 ASSY
MUT2 ASSY
PART ASSY
CRFB ASSY

F G H K L M PADA ASSY

SEMICONDUCTORS

IC	7001,7601,8001		IS31FL3236AQFLS2
IC	7701,7703,7704,7706		EQ-430L@V
IC	7702,7705		NJM12904V
Q	7001-7003,7506		LTC123JUB
Q	7501-7505,7507-7510		LSCR523UB
Q	8001-8003,8506		LTC123JUB
Q	8501-8505,8507-8510		LSCR523UB
D	7001-7007,7501,7502		1SS355VM
D	7008,7011,7012,7015		SML-D12Y8W
D	7009,7010,7013,7014		ASMB-6W020C108@V
D	7016,7017,7020,7021		ASMB-6W020C108@V
D	7018,7019,8018,8019		SML-D12U8W
D	7503,7511,7512,7603		ASMB-6W020C108@V
D	7504-7510,7601,7602		1SS355VM
D	7604-7606,7608		1SS355VM
D	7607,7609,8009,8010		ASMB-6W020C108@V
D	8001-8007,8501,8502		1SS355VM
D	8008,8011,8012,8015		SML-D12Y8W
D	8013,8014,8016,8017		ASMB-6W020C108@V
D	8020,8021,8503,8511		ASMB-6W020C108@V
D	8504-8510		1SS355VM
D	8512		ASMB-6W020C108@V

MISCELLANEOUS

S	7001-7006	TACTILE SWITCH	DSG1156
S	7501-7503	TACTILE SWITCH	DSG1156
S	7601-7603	TACTILE SWITCH	DSG1156
S	8001-8006	TACTILE SWITCH	DSG1156
S	8501-8503	TACTILE SWITCH	DSG1156
CN	7001,8001	FFC/FPC CONNECTOR	DKN1701
CN	7002,8002	FFC/FPC CONNECTOR	DKN1702
CN	7003,8003	FFC/FPC CONNECTOR	DKN1703
CN	7004,8004	CONNECTOR	CKS6207
CN	7501,8501	FFC/FPC CONNECTOR	CKS6649
CN	7601,7602	CONNECTOR	CKS4808
CN	7701	FFC/FPC CONNECTOR	CKS6635
VA	7701-7705	VARISTORS	EZJZ1V270RM

RESISTORS

R	7001,7601,8001		RC0402JR-076K8L@V
R	7002-7004,7507-7509		RC0603JR-0722KL@V

Mark	No.	Description	Part No.
	R	7005-7012,7510-7512	RC0603JR-073K3L@V
	R	7013,7014,7602,7603	RC0603JR-074K7L@V
	R	7015,7016,7604,7605	RC0603JR-078K2L@V
	R	7017-7019,7606-7608	RC0603JR-070RL@V
	R	7020,7609,8020	RC0402JR-07100KL@V
	R	7501,7502,7538,7539	RC0603JR-072K7L@V
	R	7503,7504,7540,7541	RC0603JR-075K6L@V
	R	7505,7506,7542,7543	RC0603JR-074K3L@V
	R	7519-7522,7532-7534	RC0603JR-0722KL@V
	R	7523-7525,7535-7537	RC0603JR-073K3L@V
	R	7544,7545,8501,8502	RC0603JR-072K7L@V
	R	7546,7547,8503,8504	RC0603JR-075K6L@V
	R	7548,7549,8505,8506	RC0603JR-074K3L@V
	R	7610,7701,7702	RC0603JR-070RL@V
	R	7703,7711,7719,7727	RC0603DR-0751KL@V
	R	7706,7714,7722,7730	RC0603DR-0710KL@V
	R	7707,7715,7723,7731	RC0603DR-072K7L@V
	R	7708-7710,7716-7718	RC0603JR-070RL@V
	R	7724-7726,7732	RC0603JR-070RL@V
	R	8002-8004,8507-8509	RC0603JR-0722KL@V
	R	8005-8012,8510-8512	RC0603JR-073K3L@V
	R	8013,8014	RC0603JR-074K7L@V
	R	8015,8016	RC0603JR-078K2L@V
	R	8017-8019,8021	RC0603JR-070RL@V
	R	8513,8514,8526,8527	RC0603JR-072K7L@V
	R	8515,8516,8528,8529	RC0603JR-075K6L@V
	R	8517,8518,8530,8531	RC0603JR-074K3L@V
	R	8519-8522,8532-8534	RC0603JR-0722KL@V
	R	8523-8525,8535-8537	RC0603JR-073K3L@V
CAPACITORS			
	C	7001,7602,8001	0805X106K100CT
	C	7002,7003,7603,7604	0402X105K100CT
	C	7004,7018,7019,7513	0603B104K250CT
	C	7005,7008-7015	0603B103K500CT
	C	7006,7016,7017,7510	0603N102J500CT
	C	7007,7608,8007	0402N101J500CT
	C	7020,7021,7601,8020	0805X226M100CT
	C	7501-7509,7606,8005	0603B103K500CT
	C	7511,7607,8006,8016	0603N102J500CT
	C	7512,8513	0805X106K250CT
	C	7514,7605,8004,8018	0603B104K250CT
	C	7701,7703,7705,7706	0402B104K160CT
	C	7708,7710,7712	0402B104K160CT
	C	8002,8003	0402X105K100CT
	C	8008-8015,8501-8509	0603B103K500CT
	C	8017,8510,8512	0603N102J500CT
	C	8019,8511,8514	0603B104K250CT
	C	8021	0805X226M100CT

Mark	No.	Description	Part No.
SUB1 ASSY			
Consists of			
BRWS ASSY			
SLDB ASSY			
PLAY ASSY			

I J N SUB1 ASSY

SEMICONDUCTORS

	Q	9001-9008	LTC123JUB
	D	9001-9011,9101-9106	1SS355VM
	D	9012,9013,9017,9018	LTL17KRH5D-P
	D	9014-9016	SLI-343Y8Y
	D	9019,9108	LTL17KGH5D-P
	D	9107	SLR343WBN2PT(Z)@V
	D	9109	LTL17KTBP5D@V
	D	9110-9112	1SS355VM
	D	9201	LTL17KSL5D-P
	D	9202	LTL17KTGP4J-P@V

MISCELLANEOUS

	S	9001-9005,9007-9015 TACT SWITCH	DSG1079
	S	9006 ROTARY ENCODER	DSX1133
	S	9101-9103 TACT SWITCH	DSG1079
	S	9201,9202 TACTILE SWITCH	DSG1153
	CN	9001 17P CONNECTOR	VKN1248
	CN	9002,9101 13P CONNECTOR	VKN1244
	CN	9201 9P CONNECTOR	VKN1240

RESISTORS

	R	9001,9002	RC0603JR-07100RL@V
	R	9003,9004	RC0603JR-0722KL@V
	R	9005	RC0603JR-07150RL@V
	R	9007-9012	RC0603JR-07220RL@V
	R	9014,9015	RC0603JR-07180RL@V
	R	9017	RC0603JR-07330RL@V
	R	9019,9103	RC1206JR-070RL@V
	R	9101,9102	RC0603JR-073K6L@V
	VR	9101 SLIDE VR	DCV1032
	VR	9102 VARIABLE RESISTOR	DCP1107

CAPACITORS

	C	9001-9007,9201,9202	0603B103K500CT
	C	9008,9011,9103	0603N102J500CT
	C	9009,9012,9104	0603B104K250CT
	C	9010	CEJQ470M6R3
	C	9102	CEJQ470M16

P LCDB ASSY

SEMICONDUCTORS

	IC	5001	MIMXRT1052DVJ6B@V
	IC	5002	S-80930CNMC-G80
	IC	5003	DYW2325-*
		*Part number of the initial firmware equipped	
	IC	5004	TC7SH08FUS2
	IC	5501	W9825G6KH-6@V
	Q	5001,5002,5004	2SC4081
	Q	5003	EM6K7
	Q	5005	HN1A01FUS1
	Q	5901-5903	LSCR523UB
	D	5901-5904	ASMB-6W020C108@V

MISCELLANEOUS

	L	5003 POWER INDUCTOR	ATH7047

Mark	No.	Description	Part No.
L	5501	CHIP BEEDS FILTER	BTX1047
X	5001	RESONATOR (24 MHz)	CSS1773
CN	5001	FFC/FPC CONNECTOR	DKN1705
CN	5002	FFC/FPC CONNECTOR	CKS6625
CN	5003	CONNECTOR	CKS1072
CN	5503	FFC/FPC CONNECTOR	CKS6646

RESISTORS

R	5012,5025,5039,5041	RC0402JR-074K7L@V
R	5013,5051,5056,5057	RC0402JR-0710KL@V
R	5014,5033	RC0402JR-071KL@V
R	5017	RC0402JR-07100RL@V
R	5024,5038	RC0402JR-071K5L@V
R	5026,5040,5042	RC0402JR-072K2L@V
R	5027	RC0603DR-0718RL@V
R	5028,5030,5031	RC0603DR-0722RL@V
R	5029	RC0402DR-07270RL@V
R	5032,5501,5554	RC0402JR-070RL@V
R	5034	RC0402JR-076K8L@V
R	5037	RC0402JR-073K3L@V
R	5043-5047,5053,5054	RC0402JR-0756RL@V
R	5048,5503,5504,5520	RAB4CQ560J
R	5052	RC0402JR-072M2L@V
R	5061,5510	RC0402JR-0756RL@V
R	5065,5516,5518,5526	RC0402JR-0710KL@V
R	5512	RC0402JR-07100KL@V
R	5523,5524	RAB4CQ560J
R	5530	RC0402JR-07220RL@V
R	5551,5558,5559	RC0402JR-0710KL@V
R	5901,5902,5913,5914	RC0603JR-07510RL@V
R	5903-5905	RC0603JR-073K3L@V
R	5906,5907,5915,5916	RC0603JR-07220RL@V
R	5908,5909,5917,5918	RC0603JR-07680RL@V
R	5910-5912	RC0603JR-0722KL@V
Other Resistors		RS1/16SS###J

CAPACITORS

C	5001,5012,5016,5018	0402B104K160CT
C	5002,5033,5078	0805X226K6R3CT
C	5009,5014,5020,5027	0603X475K6R3CT
C	5010,5011,5017,5031	0402N102J500CT
C	5013,5036	0805X106K160CT
C	5015,5019,5026,5037	0402B103K160CT
C	5021,5022,5024,5029	0402B104K160CT
C	5023,5071	0603X106K6R3CT
C	5028,5504	0402B102K500CT
C	5030,5032,5040,5043	0402B104K160CT
C	5034,5044,5045,5063	0603X475K6R3CT
C	5035	0402X105K100CT
C	5038,5086,5505-5511	0402B103K160CT
C	5042,5046,5047	0402B224K160CT
C	5049-5052,5054-5057	0402B224K160CT
C	5053,5070	0603X105K100CT
C	5058,5083,5515	0402N102J500CT
C	5059,5060,5062,5066	0402B224K160CT
C	5061,5076,5080,5084	0402B104K160CT
C	5064,5082,5503	0603X475K6R3CT
C	5065	0603N151J500CT
C	5067,5072,5077,5079	0402B224K160CT
C	5081	0402B224K160CT
C	5085,5087	0402N5R0C500CT
C	5088,5089,5502,5512	0402B104K160CT
C	5514	0402B104K160CT
C	5901,5902	0805X226M160CT
C	5903	0603B104K250CT
C	5904-5906	0603B103K500CT