9. EXPLODED VIEWS AND PARTS LIST

NOTES:
- *Parts marked by "NSP" are generally unavailable because they are not in our Master Spare Parts List.*
- *The ⚠ mark found on some component parts indicates the importance of the safety factor of the part. Therefore, when replacing, be sure to use parts of identical designation.*
- *Screws adjacent to ▼ mark on product are used for disassembly.*
- *For the applying amount of lubricants or glue, follow the instructions in this manual. (In the case of no amount instructions, apply as you think it appropriate.)*

9.1 PACKING SECTION

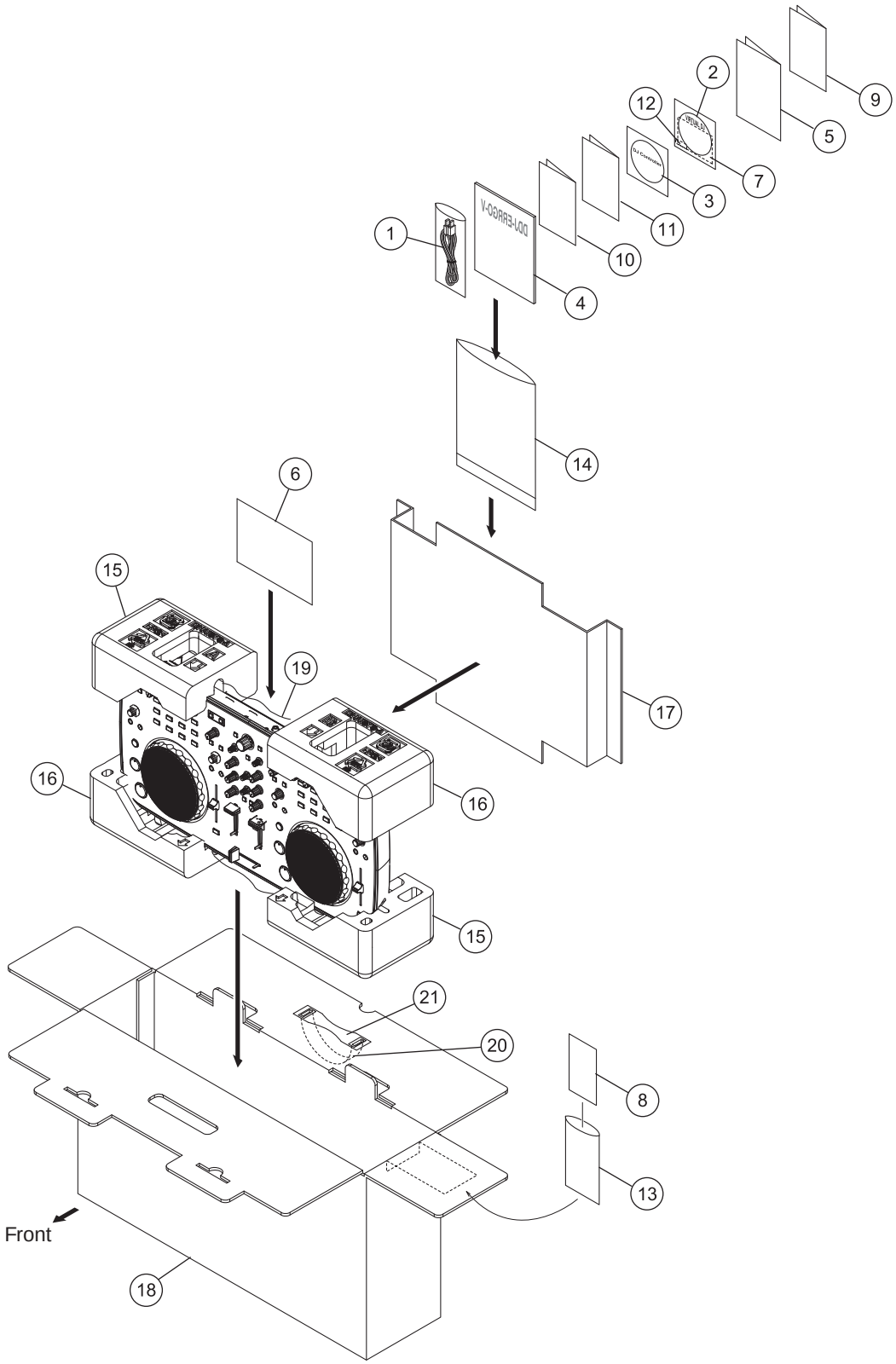

PACKING SECTION PARTS LIST

Mark	No.	Description	Part No.
	1	USB Cable	DDE1128
	2	VIRTUAL DJ LE software CD-ROM	DXX2685
	3	Driver software/ operating instructions CD-ROM	DRU1001
	4	Read Before Use (Important)	DRH1122
	5	Quick Start Guide	DRH1123
	6	Hardware Diagram for Virtual DJ (Table of Supported Functions)	DRH1124
NSP	7	License Key Label Assy	DXA2251
NSP	8	Warranty Card	DRY1259
NSP	9	Warranty Card	ARY7043
NSP	10	Warranty Card	ARY7107
NSP	11	Service network list (for Japanese customers)	ARY1127
NSP	12	Label/L K	DRW2484
NSP	13	Vinyl Bag	AHG7031
NSP	14	Polyethylene Bag	AHG7117
	15	Pad/A	DHA1878
	16	Pad/B	DHA1879
	17	Pad/ACC	DHA1880
	18	Packing Case/V	DHG3079
	19	Sheet	RHX1006
	20	Plastic Handle (PE)	VEC2292
	21	Spacer (PE)	VEC2293

9.2 EXTERIOR SECION

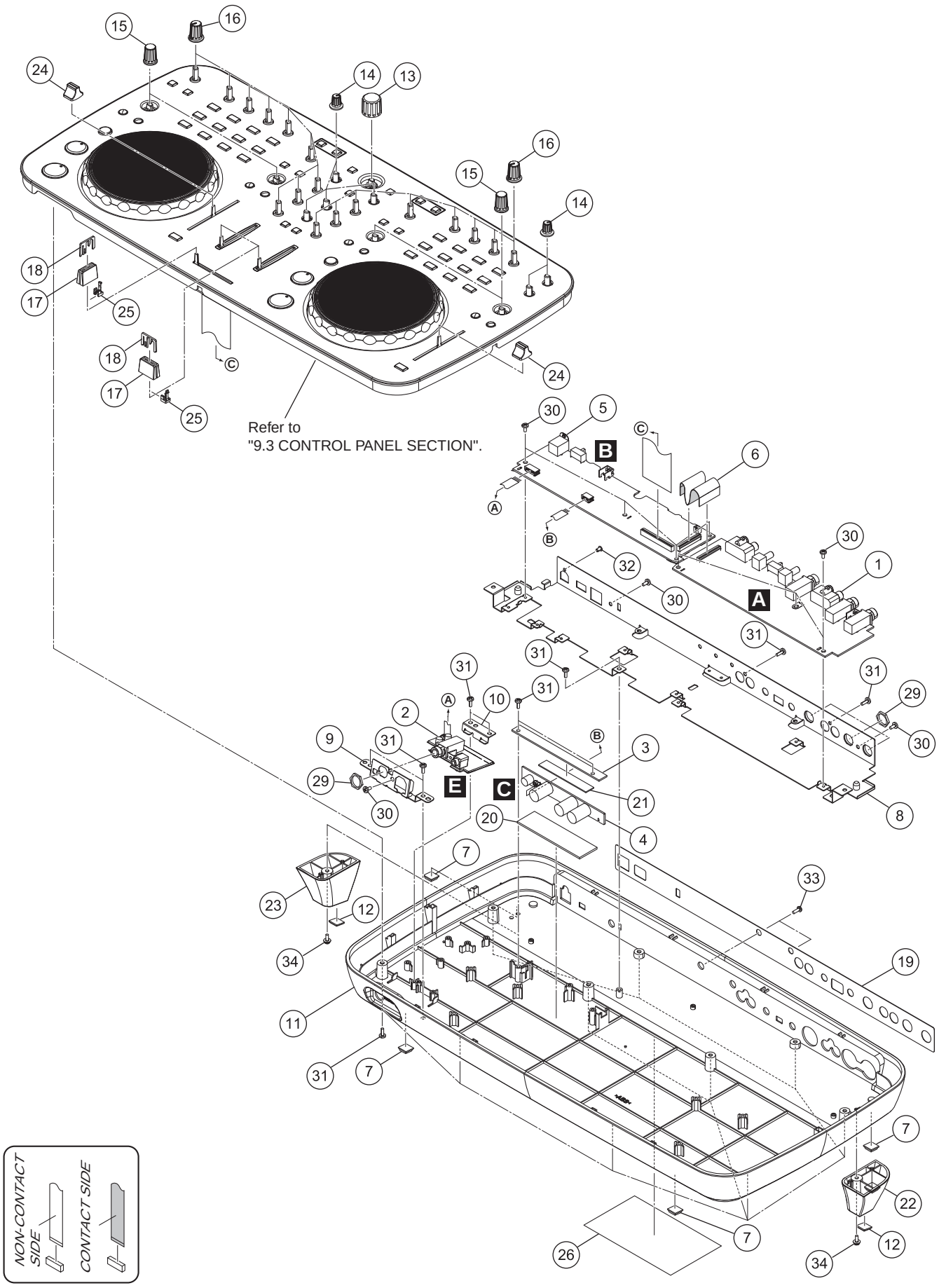

EXTERIOR SECION SECTION PARTS LIST

Mark	No.	Description	Part No.
	1	JACK Assy	DWX3304
	2	HPJK Assy	DWX3306
	3	HLD3 Assy	DWX3311
	4	HPLC Assy	DWX3324
	5	IFPW Assy	DWX3301
	6	FFC/27P	DDD1585
	7	Rubber Foot (H6)	DEB1996
	8	Stay/PCB	DNH3000
	9	Stay/HP	DNH3002
	10	Stopper/HP	DNH3006
	11	Chassis	DNK6005
	12	Rubber Foot	VEB1349
	13	Dial Knob	DAA1259
	14	Rotary Knob S (Black)	DAA1262
	15	Dial Knob S (B)	DAA1273
	16	Knob/LBK	DAA1284
	17	Slider Knob 1	DAC2684
	18	Slider Knob 2	DAC2685
	19	Rear Panel/V	DAH2864
NSP	20	Cushion/A	DEC3402
NSP	21	Cushion/B	DEC3403
	22	Foot/R	DNK6006
	23	Foot/L	DNK6007
	24	Knob/SLD	DNK6008
	25	Stopper/SLD	DNK6009
NSP	26	Label/V	DRW2492
	27	• • • • •	
	28	• • • • •	
	29	Nut (M12)	NKX2FNI
	30	Screw	BBZ30P060FTC
	31	Screw	BPZ30P080FNI
	32	Screw (M3x5)	DBA1340
	33	Screw	PBZ30P080FTC
	34	Screw	PMB30P080FTB

9.3 CONTROL PANEL SECTION

• Bottom view

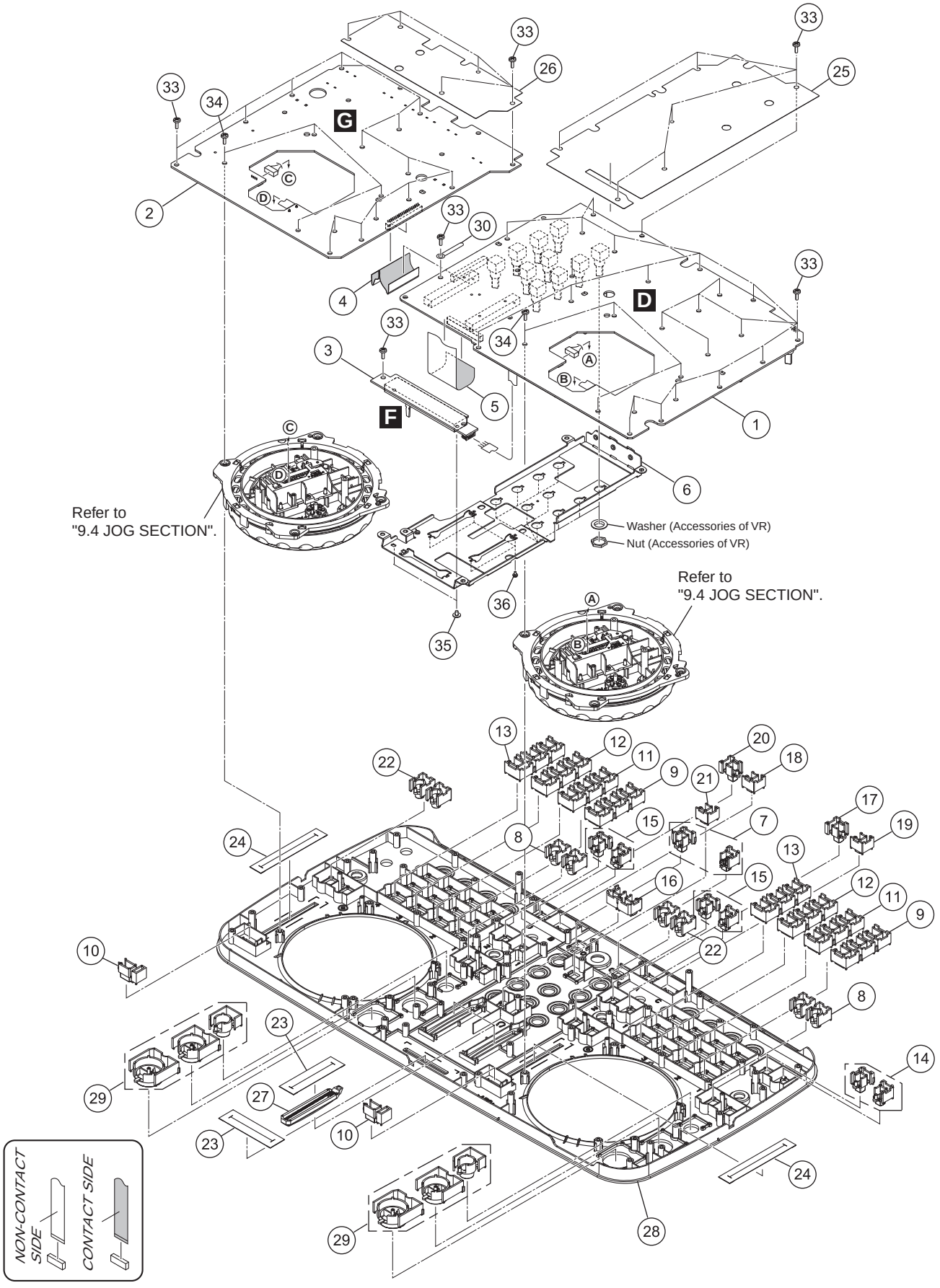

CONTROL PANEL SECTION PARTS LIST

Mark	No.	Description	Part No.
	1	CDJ1 Assy	DWX3302
	2	CDJ2 Assy	DWX3303
	3	CRFD Assy	DWX3305
	4	FFC/39P	DDD1586
	5	FFC/39P	DDD1587
	6	Stay/VR	DNH3005
	7	Button S (Black)	DAC2663
	8	Button/LOP	DAC2783
	9	Button/1	DAC2785
	10	Button/SNC	DAC2791
	11	Button/2	DAC2792
	12	Button/3	DAC2793
	13	Button/4	DAC2794
	14	Button/FNC	DAC2795
	15	Button/FX	DAC2796
	16	Button/CUE	DAC2797
	17	Button/A	DAC2798
	18	Button/B	DAC2799
	19	Button/C	DAC2800
	20	Button/D	DAC2801
	21	Button/PRV	DAC2802
	22	Button/VNL	DAC2806
	23	Fader Packing	DEC3355
	24	Packing/TMP	DEC3392
	25	Barrier/1	DEC3393
	26	Barrier/2	DEC3394
	27	Lens/FDR	DNK5989
	28	Control Panel	DNK6000
	29	Play Button Assy	DXA2252
	30	Cord Clamper (Steel)	RNH-184
	31	• • • • •	
	32	• • • • •	
	33	Screw	BPZ30P080FNI
	34	Screw	BPZ30P100FTB
	35	Screw	IMZ30P040FTC
	36	Screw	PMH20P040FTC

9.4 JOG SECTION

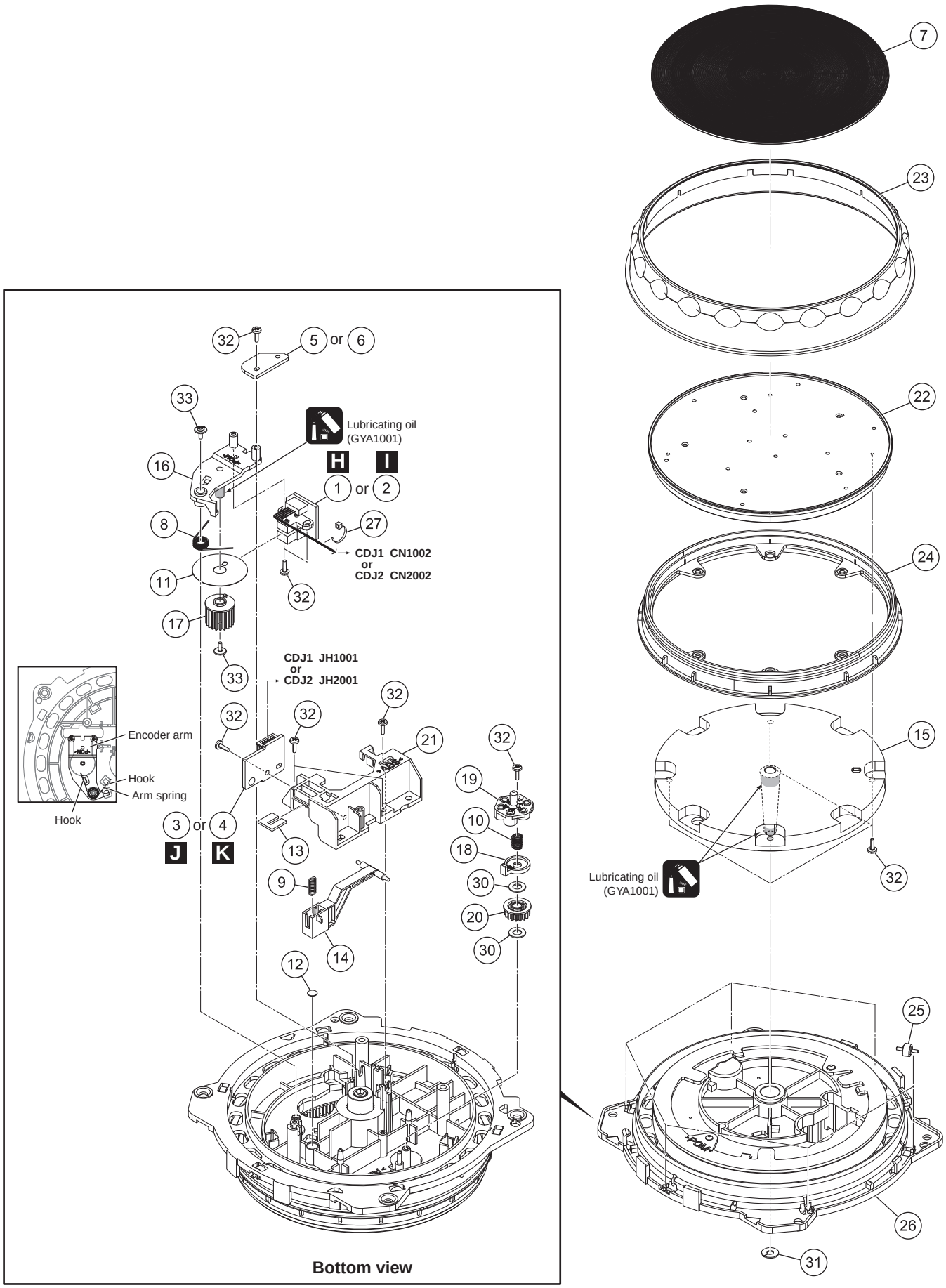

JOG SECTION PARTS LIST

Mark	No.	Description	Part No.
	1	JOG1 Assy	DWS1436
	2	JOG2 Assy	DWS1438
	3	TCH1 Assy	DWS1437
	4	TCH2 Assy	DWS1439
	5	HLD1 Assy	DWX3309
	6	HLD2 Assy	DWX3310
	7	Plate/JOG	DAH2862
	8	Arm Spring	DBH1612
	9	Lever Spring	DBH1626
	10	Load Spring	DBH1676
	11	Encoder Plate	DEC2889
	12	Lever Cushion (A)	DEC3001
	13	Lever Cushion (B)	DEC3002
	14	JOG Lever	DNK4763
	15	JOG Shaft	DNK4934
	16	Encoder Arm	DNK4936
	17	Encoder Gear	DNK4937
	18	Load Smoother	DNK4939
	19	Adjust Plate	DNK4943
	20	Load Gear	DNK5178
	21	Lever Holder	DNK5206
	22	JOG Dial A	DNK5860
	23	Dial/JGB	DNK6013
	24	Ring Lens	DNK5945
	25	Roller B Assy	DXB1877
	26	JOG Holder Assy	DXB2002
	27	Binder	ZCA-SKB90BK
	28	• • • • •	
	29	• • • • •	
	30	Washer	WA41D070D025
	31	Washer	WT32D080D050
	32	Screw	BPZ20P060FTC
	33	Screw (FE)	DBA1265