9. EXPLODED VIEWS AND PARTS LIST

NOTES:
- *Parts marked by "NSP" are generally unavailable because they are not in our Master Spare Parts List.*
- *The ⚠ mark found on some component parts indicates the importance of the safety factor of the part. Therefore, when replacing, be sure to use parts of identical designation.*
- *Screws adjacent to ▼ mark on product are used for disassembly.*
- *For the applying amount of lubricants or glue, follow the instructions in this manual. (In the case of no amount instructions, apply as you think it appropriate.)*

9.1 PACKING SECTION

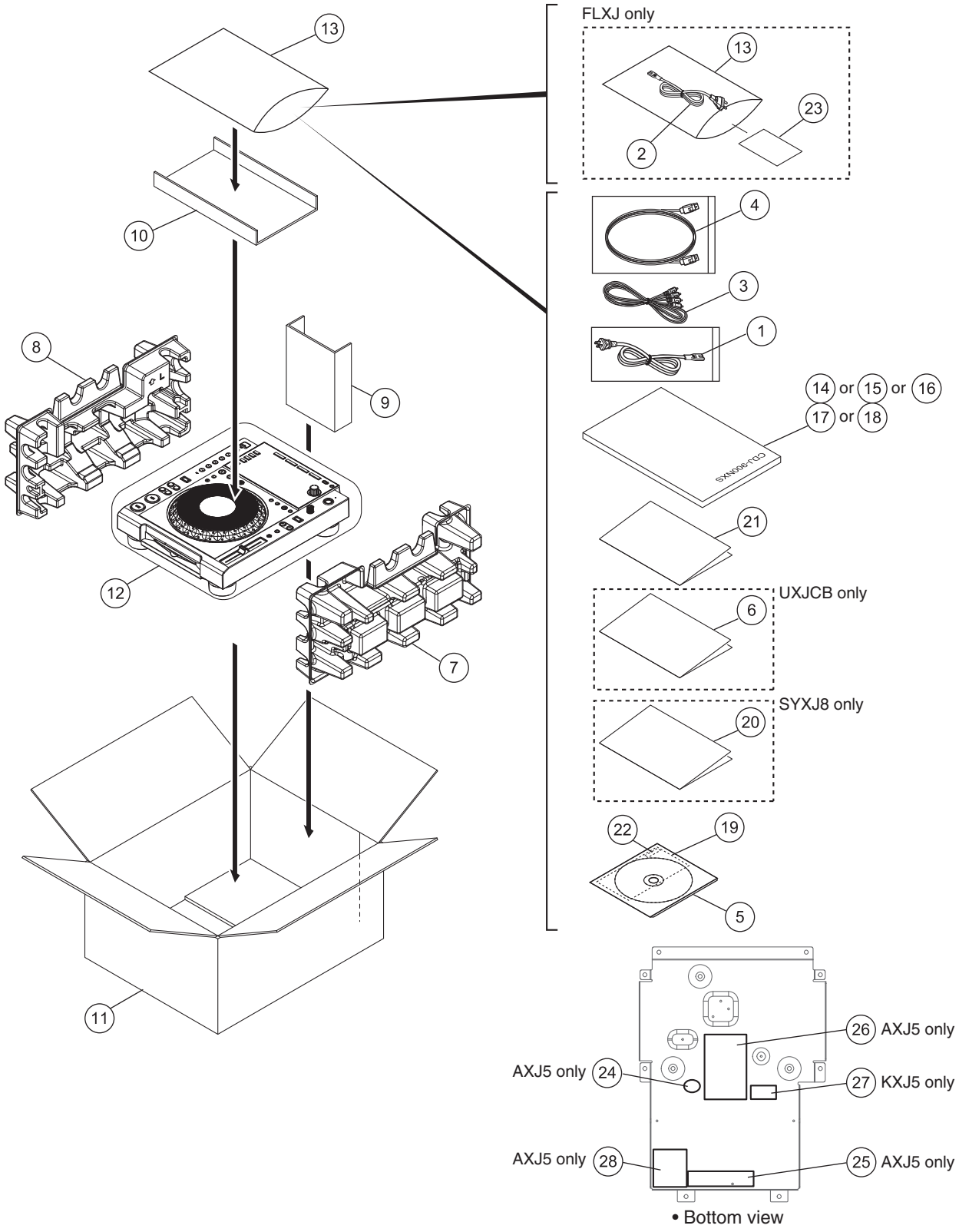

(1) PACKING SECTION PARTS LIST

Mark	No.	Description	Part No.
⚠	1	Power Cord	See Contrast table (2)
⚠	2	Power Cord	See Contrast table (2)
	3	Audio Cable (L = 1.5 m)	XDE3045
	4	LAN Cable	DDE1141
	5	CD-ROM	DXX2739
NSP	6	Sub Manual/FR2	See Contrast table (2)
	7	Pad (R)	DHA1788
	8	Pad (L)	DHA1789
	9	Spacer	DHA1802
	10	Spacer	DHA1892
	11	Packing Case	See Contrast table (2)
	12	Packing Sheet	RHC1023
NSP	13	Polyethylene Bag	AHG7117
	14	Read Before Use (Important)/ Quick Start Guide	See Contrast table (2)
	15	Read Before Use (Important)/ Quick Start Guide	See Contrast table (2)
	16	Read Before Use (Important)/ Quick Start Guide	See Contrast table (2)
	17	Read Before Use (Important)/ Quick Start Guide	See Contrast table (2)
	18	Read Before Use (Important)/ Quick Start Guide	See Contrast table (2)
NSP	19	License Key Label Assy	DXA2190
NSP	20	Warranty	See Contrast table (2)
NSP	21	Leaflet	See Contrast table (2)
NSP	22	Label/L K	DRW2484
	23	Caution Card SB	See Contrast table (2)
NSP	24	CCC S&E Label	See Contrast table (2)
	25	Caut Label/CN	See Contrast table (2)
NSP	26	Name Label/CN	See Contrast table (2)
	27	Label/KC	See Contrast table (2)
	28	Label/CN	See Contrast table (2)

(2) CONTRAST TABLE

CDJ-900NXS/UXJCB, SYXJ8, FLXJ, AXJ5 and KXJ5 are constructed the same except for the following:

Mark	No.	Symbol and Description	CDJ-900NXS /UXJCB	CDJ-900NXS /SYXJ8	CDJ-900NXS /FLXJ	CDJ-900NXS /AXJ5	CDJ-900NXS /KXJ5
⚠	1	Power Cord	ADG7022	ADG1154	ADG1154	ADG7079	ADG7113
⚠	2	Power Cord	Not used	Not used	ADG7097	Not used	Not used
NSP	6	Sub Manual/FR2	DRM1390	Not used	Not used	Not used	Not used
	11	Packing Case	DHG3286	DHG3295	DHG3296	DHG3297	DHG3298
	14	Read Before Use (Important)/Quick Start Guide (En)	DRH1228	Not used	Not used	Not used	Not used
	15	Read Before Use (Important)/Quick Start Guide (En, Fr, De, It, Nl, Es, Po, Ru)	Not used	DRH1229	Not used	Not used	Not used
	16	Read Before Use (Important)/Quick Start Guide (En, Es, Zhtw)	Not used	Not used	DRH1230	Not used	Not used
	17	Read Before Use (Important)/Quick Start Guide (Zhcn)	Not used	Not used	Not used	DRH1231	Not used
	18	Read Before Use (Important)/Quick Start Guide (Ko)	Not used	Not used	Not used	Not used	DRH1232
NSP	20	Warranty	Not used	ARY7158	Not used	Not used	Not used
NSP	21	Leaflet	DRH1245	DRH1245	DRH1245	Not used	DRH1244
	23	Caution Card SB	Not used	Not used	ARM7064	Not used	Not used
NSP	24	CCC S&E Label	Not used	Not used	Not used	DRW2310	Not used
	25	Caut Label/CN	Not used	Not used	Not used	DRW2596	Not used
NSP	26	Name Label/CN	Not used	Not used	Not used	DAL1268	Not used
	27	Label/KC	Not used	Not used	Not used	Not used	DRW2601
	28	Label/CN	Not used	Not used	Not used	DRW2606	Not used

9.2 EXTERIOR SECTION

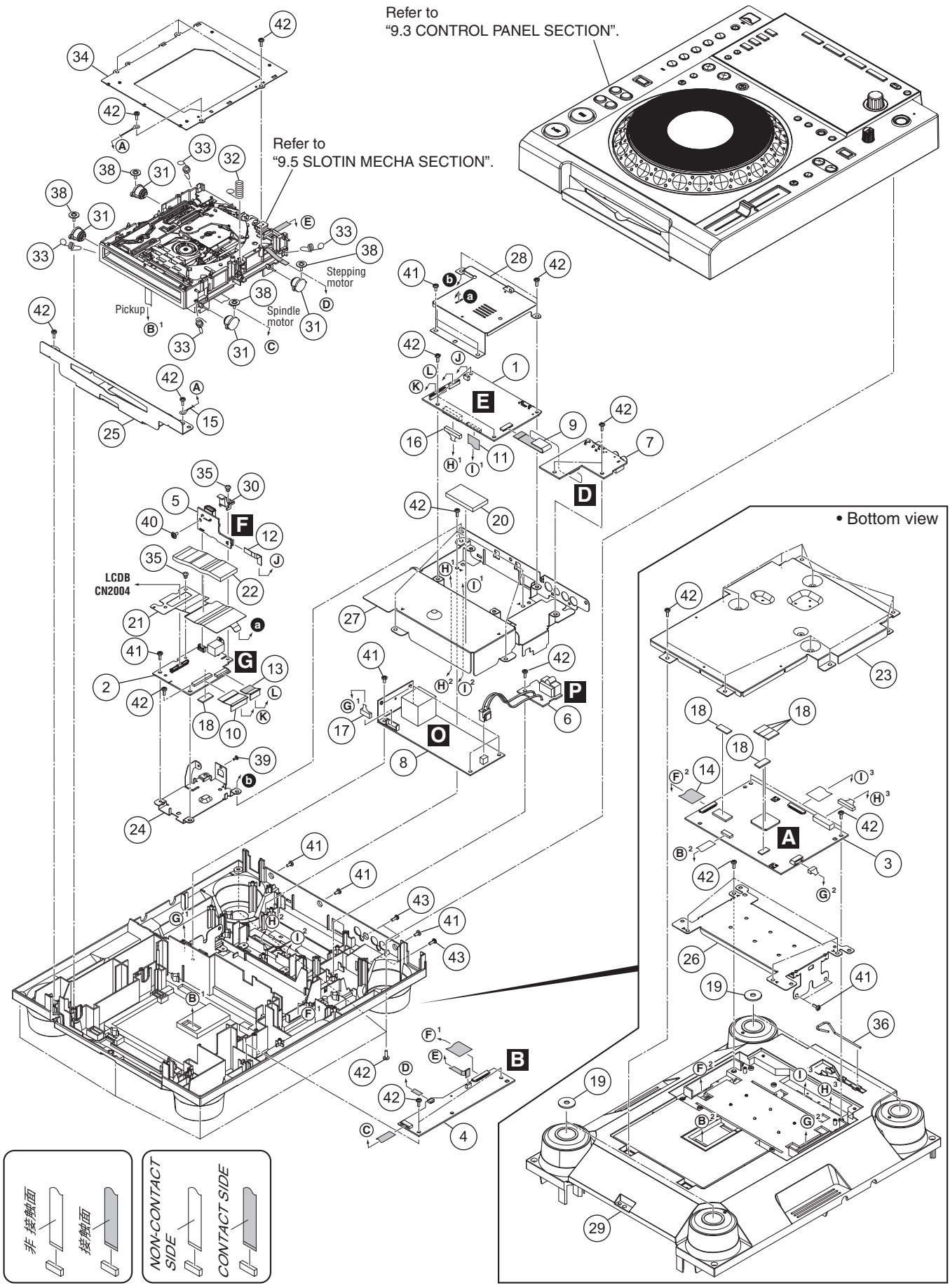

EXTERIOR SECTION PARTS LIST

Mark	No.	Description	Part No.
	1	MAIN Assy	DWX3500
	2	DDCB Assy	DWX3517
	3	SRVB Assy	DWX3519
	4	JINT Assy	DWX3520
	5	USBB Assy	DWX3518
	6	ACIN Assy	DWX3529
	7	JACB Assy	DWX3532
⚠	8	POWER SUPPLY Assy	DWR1463
	9	13P FFC	DDD1484
	10	FFC/50P	DDD1644
	11	FFC/40P	DDD1646
	12	FFC/5P	DDD1648
	13	FFC/15P	DDD1649
	14	FFC/21P	DDD1655
	15	Cord With Plug	DE007VE0
	16	Crimp Connector/12P	DKP3946
	17	Crimp Connector/6P	DKP3947
	18	Silicon Rubber D5 L	DEB1456
	19	Cushion	DEC3177
	20	Cushion/FFC	DEC3430
	21	Sheet/FFC	DEC3510
	22	Cushion/FFC	DEC3531
	23	Plate	DNH3118
	24	Stay/USB	DNH3119
	25	Plate/FR	DNH3120
	26	Stay/PSA	DNH3121
	27	Stay/PCB	DNH3122
	28	Shield Case/MIN	DNH3124
⚠	29	Chassis	DNK6263
	30	Holder/PCB	DNK6284
	31	Damper	CNV7618
	32	Earth Spring	DBH1398
	33	Float Spring (G5)	DBH1494
	34	Mecha Plate	DNH2642
	35	Rivet	RBM-003
	36	Disc Force Eject Pin	DEX1023
	37	•••••	
	38	DM Screw (FTC)	DBA1260
	39	Screw (M3*5)	DBA1340
	40	Screw	ABZ30P060FTC
	41	Screw	BBZ30P060FTB
	42	Screw	BPZ30P080FNI
	43	Screw	PPZ30P080FTB

9.3 CONTROL PANEL SECTION

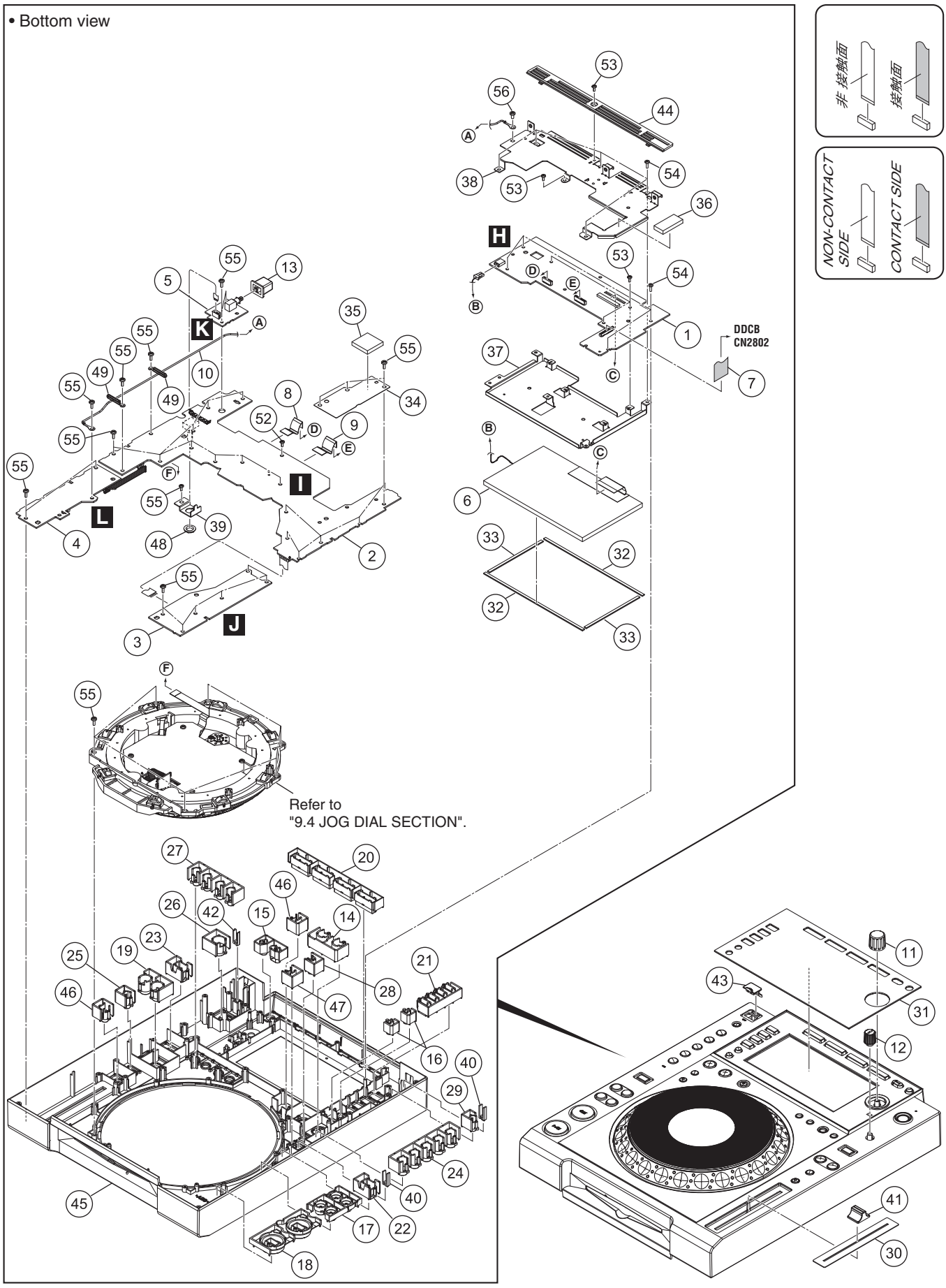

CONTROL PANEL SECTION PARTS LIST

Mark	No.	Description	Part No.
	1	LCDB Assy	DWX3516
	2	PNLB Assy	DWX3522
	3	KSWB Assy	DWX3523
	4	SLDB Assy	DWX3526
	5	PSWB Assy	DWX3527
	6	TFT LCD	CWX4352
	7	FFC/50P	DDD1645
	8	FFC/12P	DDD1650
	9	FFC/15P	DDD1651
	10	Earth Lead Wire	DDX1286
	11	Dial Knob	DAA1259
	12	Knob	DAA1303
	13	Power Knob	DAC2306
	14	Button (LOOP)	DAC2470
	15	Button (MENU)	DAC2480
	16	Button (TIME)	DAC2483
	17	Set Button (SEARCH)	DAC2495
	18	Play Knob	DAC2596
	19	Button/BSY	DAC2934
	20	Button/MOD	DAC2936
	21	Button/DEV	DAC2937
	22	Button/REV	DAC2938
	23	Button/VNL	DAC2939
	24	Button/BD	DAC2940
	25	Button/TMP	DAC2942
	26	Button/EJT	DAC2943
	27	Button/CAL	DAC2945
	28	Button/4BL	DAC2946
	29	Button/USB	DAC2947
	30	Slide Sheet 1C	DAH2404
	31	Panel/DIS	DAH2978
	32	Packing/FR	DEC3493
	33	Packing/LR	DEC3494
	34	Cover/PNL	DEC3509
	35	Cushion/PNL	DEC3535
	36	Cushion/LCD	DEC3538
	37	Stay/LCD	DND1277
	38	Bracket/LCD	DND1278
	39	Stay/VR	DNF1928
	40	Device Lens	DNK5318
	41	Knob/SLD	DNK5981
	42	Lens/EUP	DNK6040
	43	Cover/USB	DNK6041
	44	Cover/R	DNK6264
⚠	45	Control Panel	DNK6266
	46	Button Assy/RLP	DXB2142
	47	Button Assy/SLP	DXB2143
	48	Flange Nut M9	DBN1008
	49	Cord Clamper	RNH-184
	50	•••••	
	51	•••••	
	52	Screw	ABZ30P060FTC
	53	Screw	BBZ26P060FTB
	54	Screw	BPZ26P080FTC
	55	Screw	BPZ30P080FNI
	56	Screw	BSZ30P060FTC

9.4 JOG DIAL SECTION

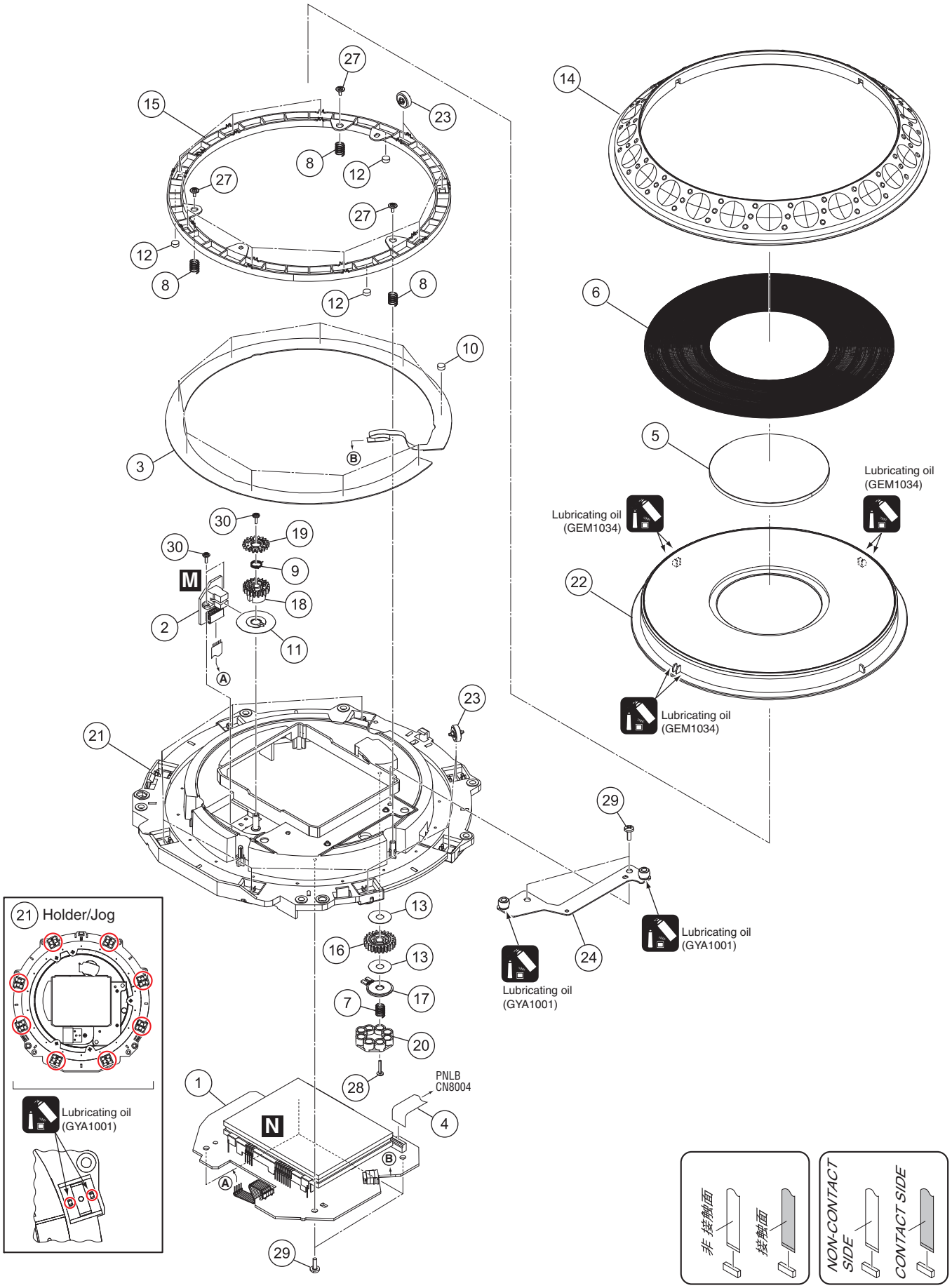

JOG DIAL SECTION PARTS LIST

Mark	No.	Description	Part No.
	1	JFLB Assy	DWX3530
	2	JOGB Assy	DWX3531
	3	Sheet SW	DSX1078
	4	FFC/10P	DDD1652
	5	Jog Panel	DAH2609
	6	Jog Plate	DAH2839
	7	Load Spring	DBH1680
	8	SW Spring	DBH1681
	9	Encoder Spring	DBH1710
	10	SW Cushion HH48/2	DEC2538
	11	Encorder Plate	DEC2889
	12	Ring Cushion L24/2.0	DEC2958
	13	Washer	DEC3137
	14	Jog B	DNK4068
	15	SW Ring	DNK5233
	16	Load Gear	DNK5236
	17	Smoother	DNK5237
	18	Gear A	DNK5241
	19	Gear B	DNK5242
	20	Adjust Plate	DNK5300
	21	Holder/JOG	DNK6265
	22	Jog Dial A	DNK5357
	23	Roller Assy/A	DXB2118
	24	Stay Assy/JOG	DXB2133
	25	•••••	
	26	•••••	
	27	Screw (FE)	DBA1265
	28	Screw	BPZ20P100FTC
	29	Screw	BPZ30P080FNI
	30	Screw	IPZ20P060FTC

9.5 SLOT IN MECHA SECTION

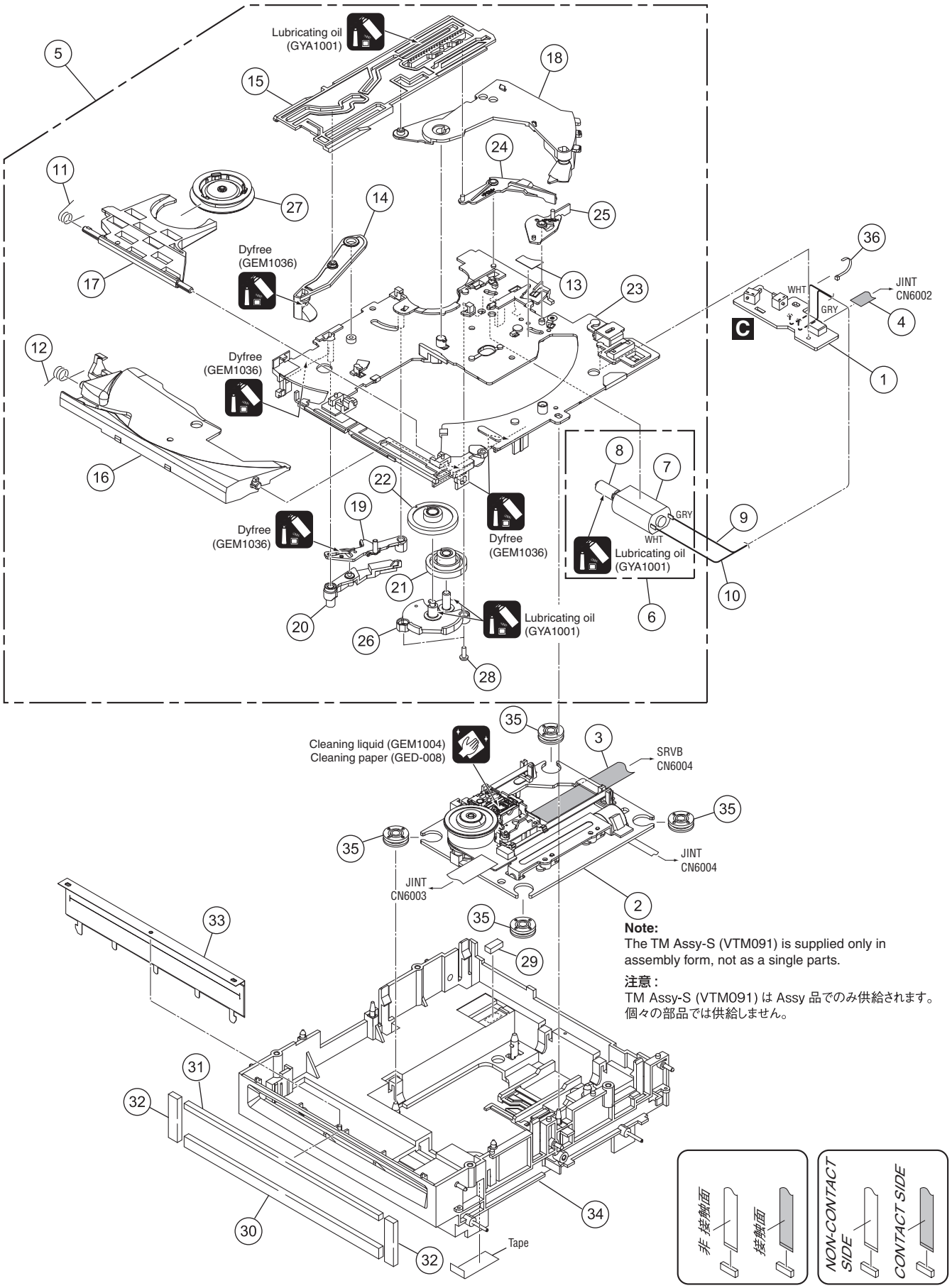

Note:
The TM Assy-S (VTM091) is supplied only in assembly form, not as a single parts.

注意 :
TM Assy-S (VTM091) は Assy 品でのみ供給されます。
個々の部品では供給しません。

SLOT IN MECHA SECTION PARTS LIST

Mark	No.	Description	Part No.
	1	SLMB Assy	DWX3528
	2	TM Assy-S (VTM-091)	DXX2616
	3	FFC/24P	DDD1654
	4	FFC/5P	DDD1653
NSP	5	SLOTIN MECHA Assy	DXA2206
	6	DC Motor Assy-S	DXX2615
NSP	7	DC Motor	DXM1384
NSP	8	Worm Gear	DNK3910
	9	Lead Wire	ZWNN1007G28-8-06A
	10	Lead Wire	ZWNN1007G28-9-06A
	11	Clamp Spring	DBH1374
	12	Guide Spring	DBH1375
	13	SW Lever Spacer SV	DEC2831
	14	Loading Lever	DNK3406
	15	Main Cam	DNK3407
	16	Disc Guide	DNK3478
	17	Clamp Arm	DNK3576
	18	Eject Lever	DNK3684
	19	Lever AP	DNK3835
	20	Lever BP	DNK3836
	21	Loading Gear	DNK3911
	22	Drive Gear	DNK3912
	23	Loading Base SV	DNK4369
	24	SW Lever SV1	DNK4370
	25	SW Lever SV2	DNK4371
	26	Gear Holder SV	DNK4372
	27	Clamper Assy-S	DXX2661
	28	Screw	BPZ20P060FTC
	29	Spacer POR (T3)	DEB1566
	30	Vessel Cushion A	DEC2852
	31	Vessel Cushion B	DEC2853
	32	Vessel Cushion C	DEC2854
	33	Front Sheet	DED1132
	34	Float Base 05 Assy	DXB2068
	35	Floating Rubber (SI)	VEB1351
	36	Binder	ZCA-SKB90BK