9. EXPLODED VIEWS AND PARTS LIST

NOTES:
- *Parts marked by "NSP" are generally unavailable because they are not in our Master Spare Parts List.*
- *The ⚠ mark found on some component parts indicates the importance of the safety factor of the part. Therefore, when replacing, be sure to use parts of identical designation.*
- *Screws adjacent to ▼ mark on product are used for disassembly.*
- *For the applying amount of lubricants or glue, follow the instructions in this manual. (In the case of no amount instructions, apply as you think it appropriate.)*

9.1 PACKING SECTION

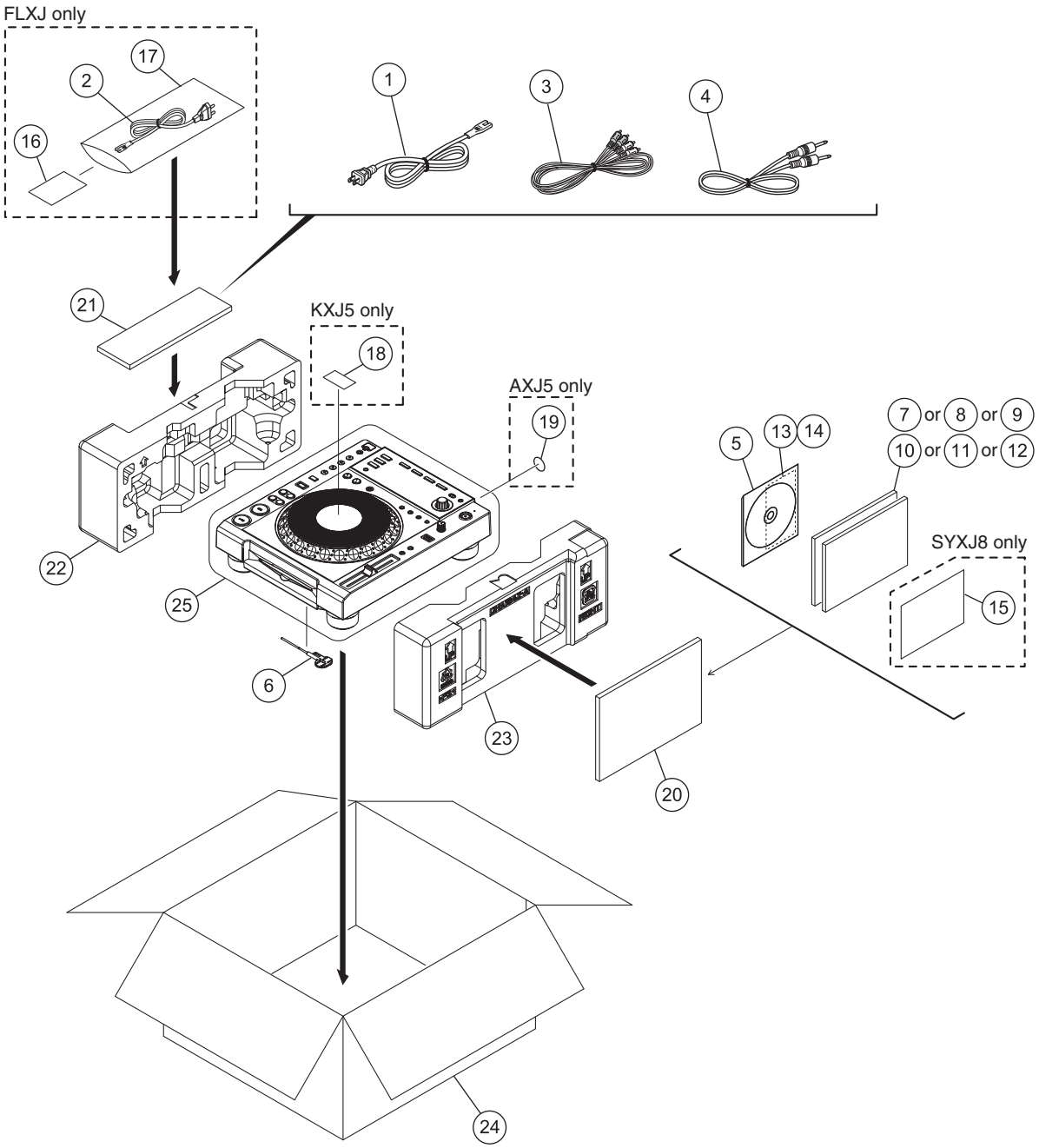

(1) PACKING SECTION PARTS LIST

Mark	No.	Description	Part No.
⚠	1	Power Cord	See Contrast table (2)
⚠	2	Power Cord	See Contrast table (2)
	3	Audio cable	XDE3045
	4	Control cord	XDE3063
	5	CD-ROM (rekordbox license key attached)	DXX2654
	6	Disc force eject pin (mounted on bottom of product)	DEX1008
	7	Operating Instructions	See Contrast table (2)
	8	Operating Instructions	See Contrast table (2)
	9	Operating Instructions	See Contrast table (2)
	10	Operating Instructions	See Contrast table (2)
	11	Operating Instructions	See Contrast table (2)
	12	Operating Instructions	See Contrast table (2)
NSP	13	License Key Label	DRW2402
NSP	14	License Key Label Assy	DXA2190
NSP	15	Warranty Card	See Contrast table (2)
	16	Caution Card SB	See Contrast table (2)
	17	Vinyl Bag	See Contrast table (2)
	18	Recycle Label (M)	See Contrast table (2)
NSP	19	CCC S & E Label	See Contrast table (2)
NSP	20	Polyethylene Bag	AHG7117
	21	Vinyl Bag	Z21-013
	22	Pad L	DHA1841
	23	Pad R	DHA1842
	24	Packing Case	See Contrast table (2)
	25	Sheet	RHX1006

(2) CONTRAST TABLE

CDJ-850/SYXJ8, CUXJ, FLXJ, KXJ5 and AXJ5 are constructed the same except for the following:

Mark	No.	Symbol and Description	CDJ-850 /SYXJ8	CDJ-850 /CUXJ	CDJ-850 /FLXJ	CDJ-850 /KXJ5	CDJ-850 /AXJ5
⚠	1	Power Cord	ADG1154	ADG7022	ADG1154	XDG3054	ADG7079
⚠	2	Power Cord	Not used	Not used	ADG7097	Not used	Not used
	7	Operating Instructions (En, Fr, De)	DRB1527	Not used	Not used	Not used	Not used
	8	Operating Instructions (It, Nl, Es, Ru)	DRB1535	Not used	Not used	Not used	Not used
	9	Operating Instructions (En, Fr)	Not used	DRB1526	Not used	Not used	Not used
	10	Operating Instructions (En, Es, Zhtw)	Not used	Not used	DRB1528	Not used	Not used
	11	Operating Instructions (Ko)	Not used	Not used	Not used	DRB1530	Not used
	12	Operating Instructions (Zhcn, En)	Not used	Not used	Not used	Not used	DRB1529
NSP	15	Warranty Card	ARY7107	Not used	Not used	Not used	Not used
	16	Caution Card SB	Not used	Not used	ARM7064	Not used	Not used
	17	Vinyl Bag	Not used	Not used	Z21-013	Not used	Not used
	18	Recycle Label (M)	Not used	Not used	Not used	DRW2307	Not used
NSP	19	CCC S & E Label	Not used	Not used	Not used	Not used	DRW2310
	24	Packing Case	DHG2918	DHG2919	DHG2920	DHG2923	DHG2922

9.2 EXTERIOR SECION

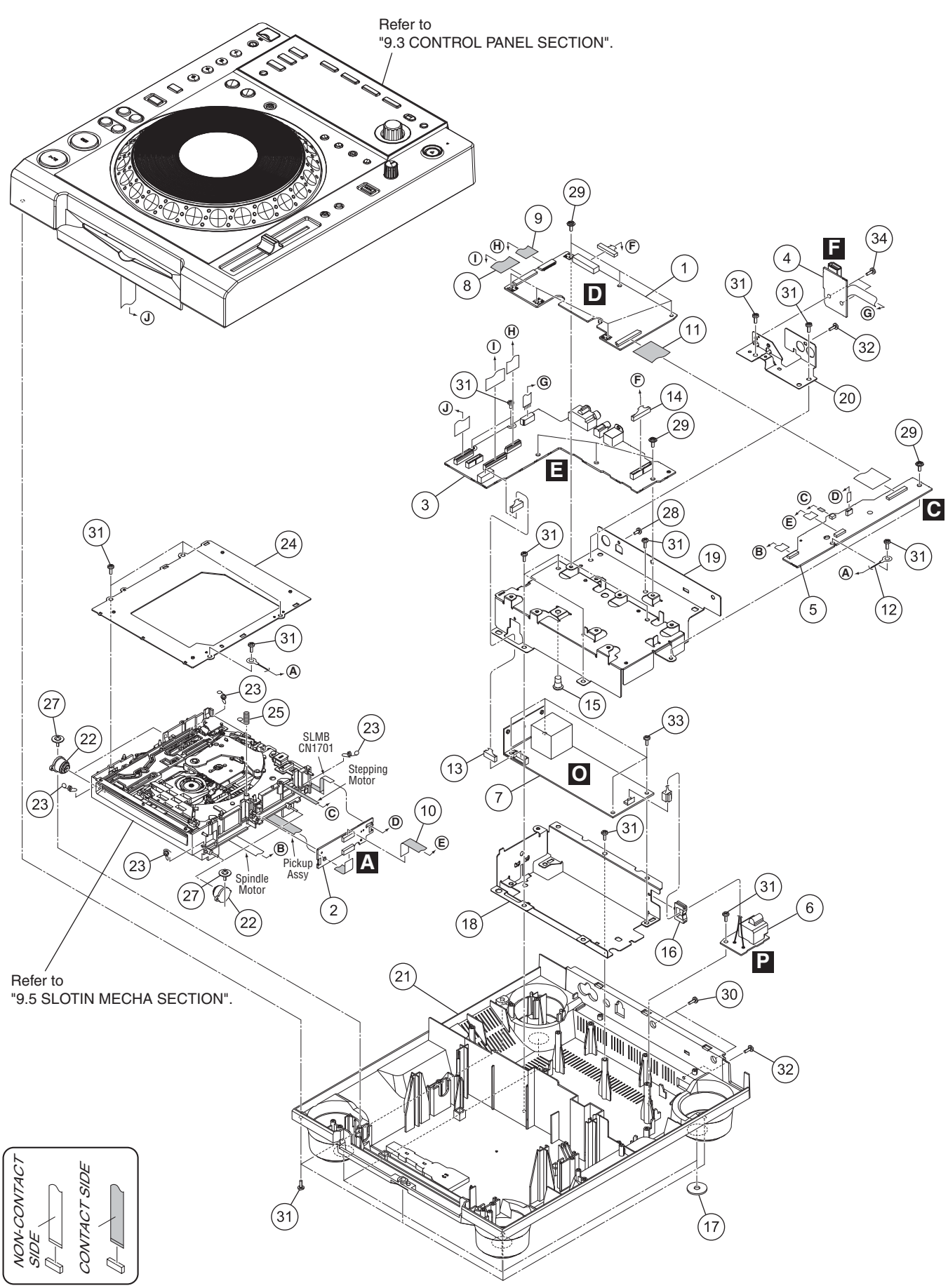

(1) EXTERIOR SECION SECTION PARTS LIST

Mark	No.	Description	Part No.
	1	MAIN Assy	DWX3174
	2	CNCT Assy	DWX3151
	3	CMPX Assy	DWX3153
	4	USBA Assy	DWX3156
	5	JINT Assy	DWX3157
	6	ACIN Assy	See Contrast table (2)
⚠	7	POWER SUPPLY Assy	DWR1463
	8	27P FFC	DDD1523
	9	17P FFC	DDD1524
	10	24P FFC	DDD1535
	11	50P FFC	DDD1536
NSP	12	Cord With Plug	DE010VE0
	13	Connector Assy 6P	DKP3869
	14	Connector Assy	PF13PP-S07
	15	Card Spacer	AEC7133
	16	Edge Saddle	AEC7582
	17	Cushion	DEC3177
	18	Power Supply Stay	DNH2936
	19	Main PCB Stay	DNH2937
NSP	20	USB Stay	DNH2938
⚠	21	Chassis	See Contrast table (2)
	22	Damper	CNV6011
	23	Float Spring G5	DBH1494
	24	Mecha Plate	DNH2642
	25	Earth Spring	DBH1398
	26	•••••	
	27	DM Screw (FTC)	DBA1260
	28	Screw (M3 x 5)	DBA1340
	29	Screw	ABZ30P060FTC
	30	Screw	BBZ30P060FTB
	31	Screw	BPZ30P080FNI
	32	Screw	BPZ30P080FTB
	33	Screw	BPZ30P100FTC
	34	Screw	BSZ30P060FTC

(2) CONTRAST TABLE

CDJ-850/SYXJ8, CUXJ, FLXJ, KXJ5 and AXJ5 are constructed the same except for the following:

Mark	No.	Symbol and Description	CDJ-850 /SYXJ8	CDJ-850 /CUXJ	CDJ-850 /FLXJ	CDJ-850 /KXJ5	CDJ-850 /AXJ5
	6	ACIN Assy	DWX3158	DWX3173	DWX3158	DWX3158	DWX3158
⚠	21	Chassis	DNK5785	DNK5819	DNK5820	DNK5823	DNK5822

9.3 CONTROL PANEL SECTION

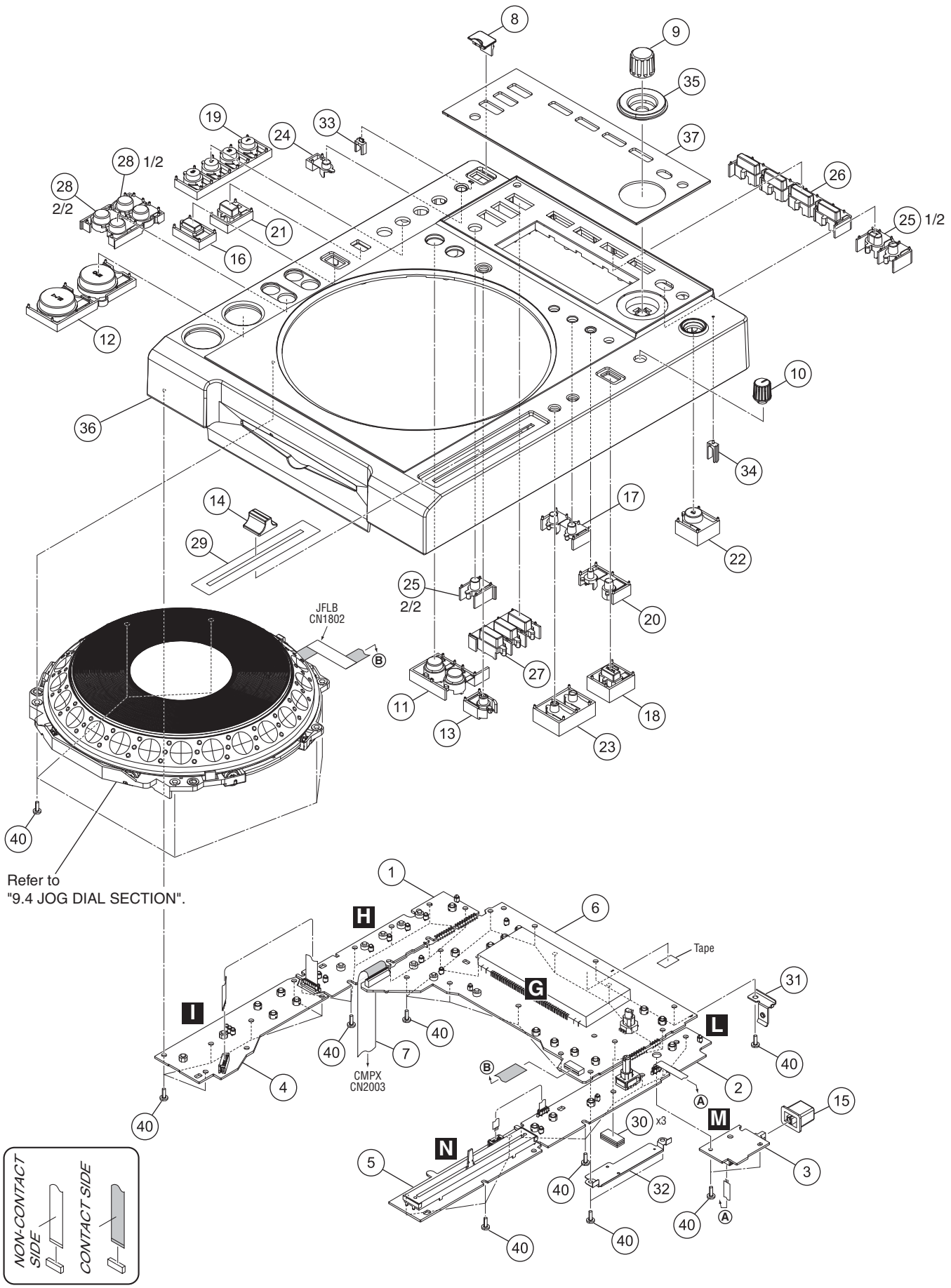

CONTROL PANEL SECTION PARTS LIST

Mark	No.	Description	Part No.
NSP	1	KSW1 Assy	DWS1422
NSP	2	SLD1 Assy	DWS1423
	3	PSWB Assy	DWS1424
	4	KSW2 Assy	DWS1426
	5	SLD2 Assy	DWS1427
	6	DFLB Assy	DWX3152 *
	7	21P FFC	DDD1522
	8	USB Cover	DNK4999
	9	Rotary Knob C	DAA1194
	10	Dial Knob	DAA1259
	11	Loop Knob	DAC2066
	12	Play Knob	DAC2286
	13	Reloop Knob	DAC2291
	14	Slide Knob	DAC2292
	15	Power Knob	DAC2306
	16	Reverse Knob	DAC2364
	17	Set Button (CALL)	DAC2497
	18	Vinyl Knob	DAC2542
	19	Auto Beat Roop Knob	DAC2543
	20	Del/Memo Knob	DAC2545
	21	Beat Select Button	DAC2546
	22	Eject Button	DAC2548
	23	Tempo Button	DAC2549
	24	USB Stop Button	DAC2550
	25	Back Button	DAC2613
	26	Device Select Button	DAC2614
	27	Mode Select Button	DAC2615
	28	Search Button Silver	DAC2627
	29	Slide Sheet 1C	DAH2404
NSP	30	Silicon Rubber D5 L	DEB1456
	31	Earth Bracket	DNH2941
	32	Heatsink	DNH2958
	33	USB Lens	DNK5353
	34	EUP Lens	DNK5408
	35	Encoder Ring	DNK5489
⚠	36	Control Panel	DNK5786
	37	Display Window	DNK5793
	38	•••••	
	39	•••••	
	40	Screw	BPZ30P080FNI

* The service part of DFLB Assy (DWX3152) is supplied with KSW1 Assy (DWS1422) and SLD1 Assy (DWS1423). (There assemblies are connected with the jumper wires.)

9.4 JOG DIAL SECTION

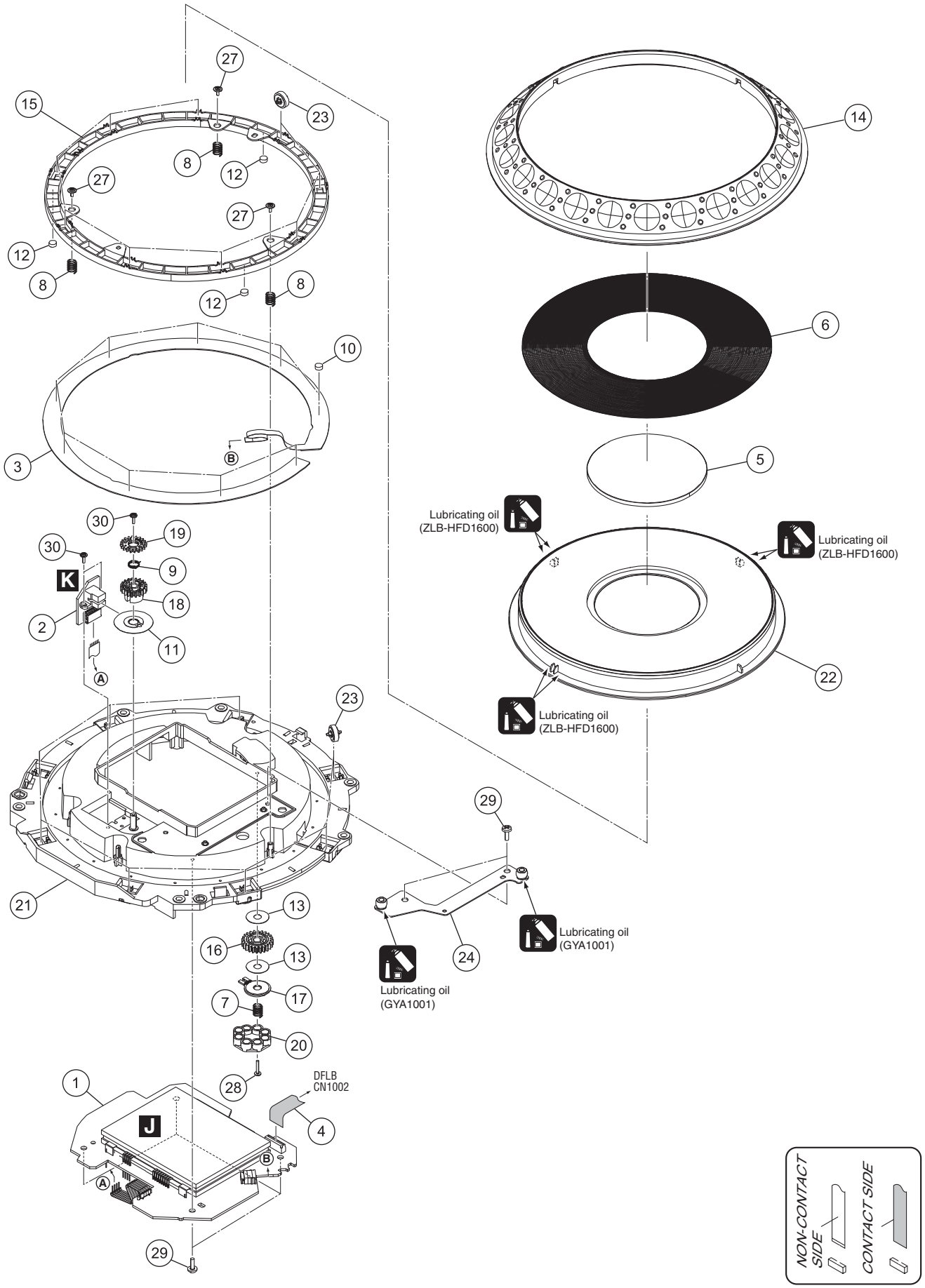

JOG DIAL SECTION PARTS LIST

Mark	No.	Description	Part No.
	1	JFLB Assy	DWX3154
	2	JOGB Assy	DWX3155
	3	Sheet SW	DSX1078
	4	13P FFC	DDD1521
	5	JOG Panel	DAH2609
	6	JOG Plate	DAH2839
	7	Load Spring	DBH1680
	8	SW Spring	DBH1681
	9	Encoder Spring	DBH1710
	10	SW Cushion HH48/2	DEC2538
	11	Encoder Plate	DEC2889
	12	Ring Cushion L24/2.0	DEC2958
	13	Washer	DEC3137
	14	JOG B	DNK4068
	15	SW Ring	DNK5233
	16	Load Gear	DNK5236
	17	Smoother	DNK5237
	18	Gear A	DNK5241
	19	Gear B	DNK5242
	20	Adjust Plate	DNK5300
	21	JOG Holder M	DNK5356
	22	JOG Dial A	DNK5357
	23	Roller A Assy	DXB2010
	24	JOG Stay Assy	DXB2015
	25	•••••	
	26	•••••	
	27	Screw (FE)	DBA1265
	28	Screw	BPZ20P100FTC
	29	Screw	BPZ30P080FNI
	30	Screw	IPZ20P060FTC

9.5 SLOTIN MECHA SECTION

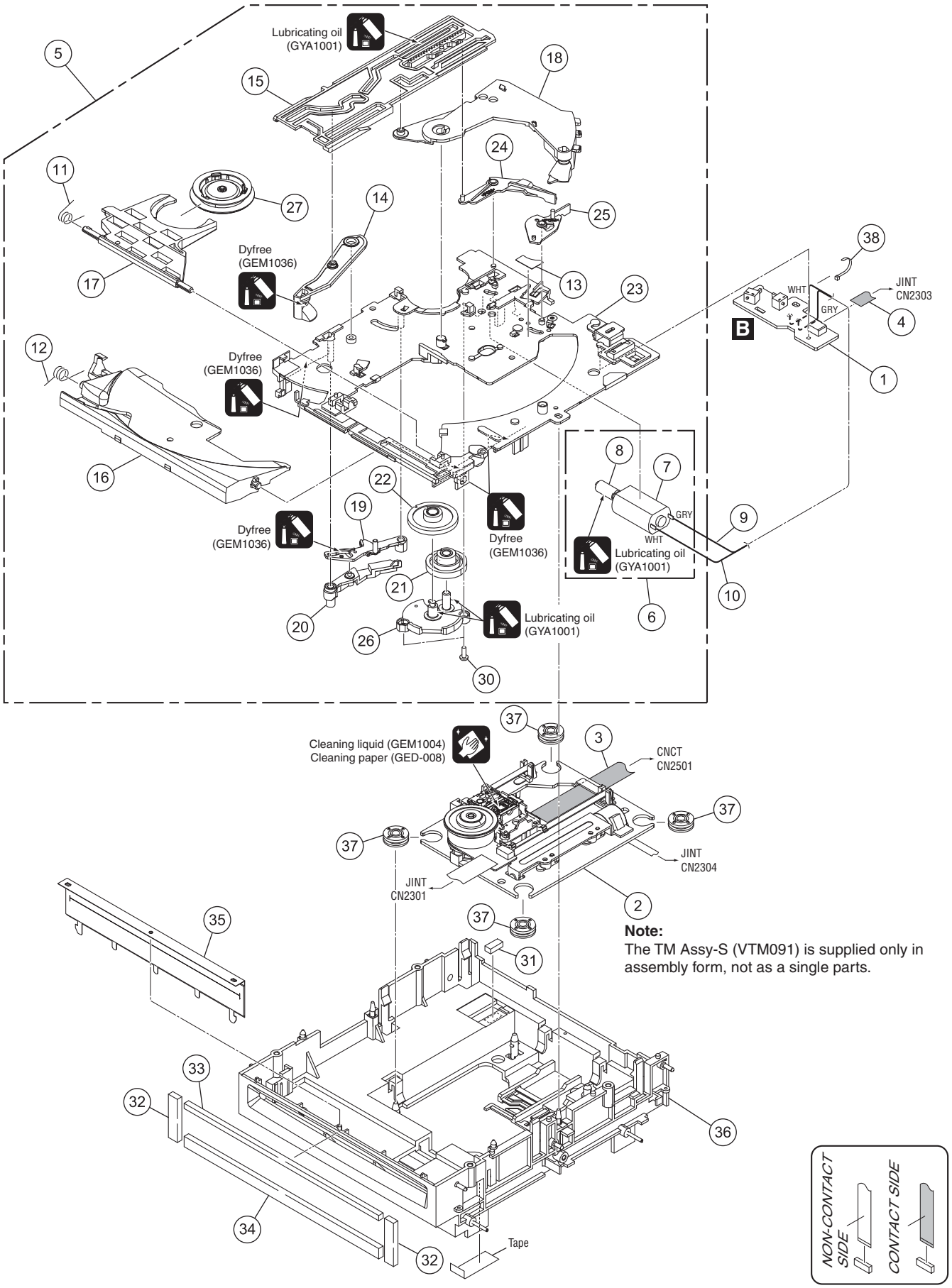

Note:
The TM Assy-S (VTM091) is supplied only in assembly form, not as a single parts.

SLOTIN MECHA SECTION PARTS LIST

Mark	No.	Description	Part No.
	1	SLMB Assy	DWS1425
	2	TM Assy-S (VTM091)	DXX2616
	3	24P FFC	DDD1491
	4	5P FFC	DDD1527
NSP	5	SLOTIN MECHA Assy	DXA2206
	6	Loading Motor Assy-S	DXX2615
NSP	7	DC Motor	DXM1384
NSP	8	Worm Gear	DNK3910
	9	Lead Wire	ZWNN1007G28-8-06A
	10	Lead Wire	ZWNN1007G28-9-06A
	11	Clamp Spring	DBH1374
	12	Guide Spring	DBH1375
	13	SW. Lever Spacer SV	DEC2831
	14	Loading Lever	DNK3406
	15	Main Cam	DNK3407
	16	Disc Guide	DNK3478
	17	Clamp Arm	DNK3576
	18	Eject Lever	DNK3684
	19	Lever AP	DNK3835
	20	Lever BP	DNK3836
	21	Loading Gear	DNK3911
	22	Drive Gear	DNK3912
	23	Loading Base SV	DNK4369
	24	SW Lever SV1	DNK4370
	25	SW Lever SV2	DNK4371
	26	Gear Holder SV	DNK4372
	27	Clamper Assy-S	DXX2661
	28	•••••	
	29	•••••	
	30	Screw	BPZ20P060FTC
	31	Spacer POR (T3)	DEB1566
	32	Vessel Cushion (C)	DEC2854
	33	Vessel Cushion T	DEC3349
	34	Vessel Cushion U	DEC3350
	35	Front Sheet	DED1132
	36	Float Base 05 Assy	DXB2068
	37	Floating Rubber	VEB1351
	38	Binder	ZCA-SKB90BK