2. EXPLODED VIEWS AND PARTS LIST

NOTES:
- *Parts marked by "NSP" are generally unavailable because they are not in our Master Spare Parts List.*
- *The ⚠ mark found on some component parts indicates the importance of the safety factor of the part. Therefore, when replacing, be sure to use parts of identical designation.*
- *Screws adjacent to ▼ mark on product are used for disassembly.*
- *For the applying amount of lubricants or glue, follow the instructions in this manual. (In the case of no amount instructions, apply as you think it appropriate.)*

2.1 PACKING

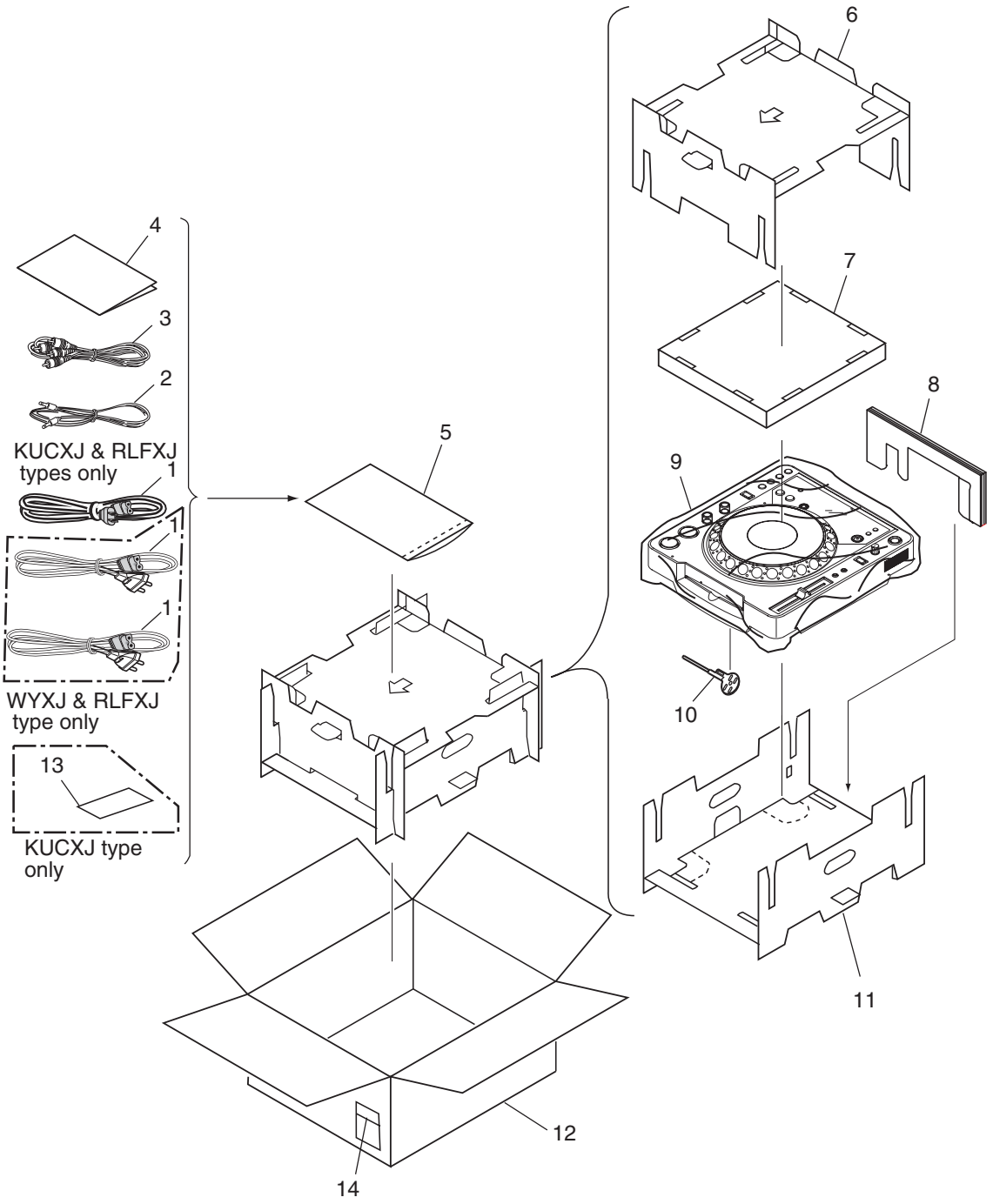

PACKING parts List

Mark	No.	Description	Part No.
⚠	1	AC Power Cord	See Contrast table(2)
	2	Control Cord	XDE3063
	3	Audio Cord	VDE1064
	4	Operating Instructions	See Contrast table(2)
NSP	5	Polyethylene Bag	AHG7117
	6	Pad B	DHA1556
	7	Pad C	DHA1557
	8	Pad D	DHA1558
	9	Sheet	RHX1006
	10	Push Rod	DEX1008
	11	Pad A	DHA1555
	12	Packing Case	See Contrast table(2)
NSP	13	Warranty Card	See Contrast table(2)
NSP	14	Label	See Contrast table(2)

(2) CONTRAST TABLE

CDJ-800MK2/KUCXJ, /WYXJ5 and RLFXJ types are constructed the same except for the following:

Mark	No.	Symbol and Description	CDJ-800MK2/ KUCXJ	CDJ-800MK2/ WYXJ5	CDJ-800MK2/ RLFXJ
⚠	1	AC Power Cord	ADG7021	ADG1154	ADG1154
⚠	1	AC Power Cord	Not used	Not used	ADG7097
	4	Operating Instructions (English)(KUCXJ)	DRB1401	Not used	Not used
	4	Operating Instructions (WYXJ5)(English, French, German, Italian, Dutch, Spanish)	Not used	DRB1400	Not used
	4	Operating Instructions (RLFXJ) (English, Spanish, Chinese)	Not used	Not used	DRB1402
	12	Packing Case	DHG2595	DHG2594	DHG2596
NSP	13	Warranty Card	ARY7043	Not used	Not used
NSP	14	Label	DRW2311	VRW1629	VRW1629

2.2 EXTERIOR SECTION

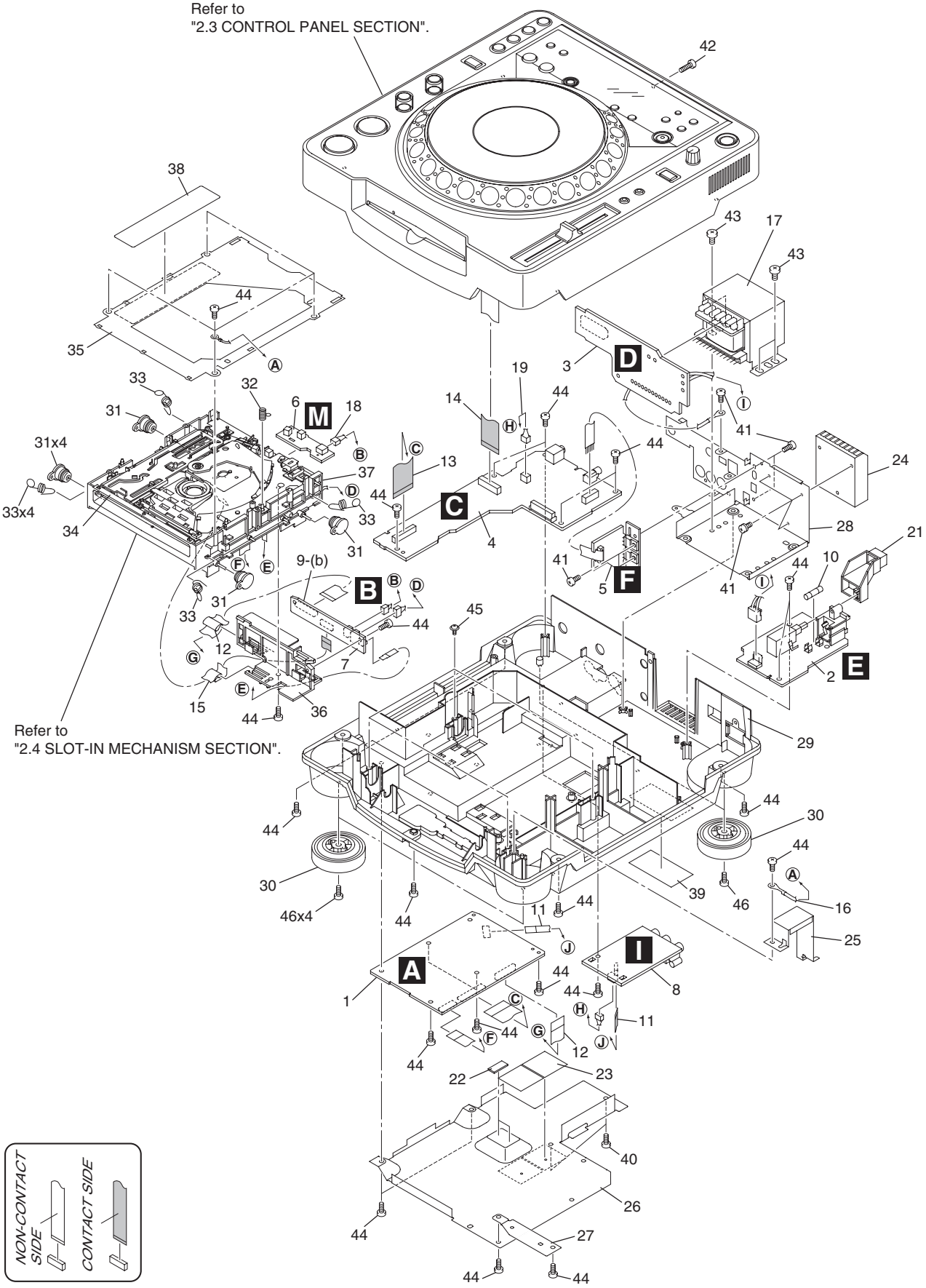

EXTERIOR SECTION parts List

Mark	No.	Description	Part No.
	1	MAIN Assy	DWG1622
⚠	2	AC IN Assy	See Contrast table(2)
⚠	3	TRNS Assy	See Contrast table(2)
	4	SECB Assy	DWR1309
	5	REGB Assy	DWR1310
	6	SLMB Assy	DWS1388
	7	RLYB Assy	DWX2602
	8	JACK Assy	DWG1626
	9	• • • •	
⚠	10	Fuse	See Contrast table(2)
	11	FFC (9p)	DDD1311
	12	FFC (32p)	DDD1312
	13	FFC (25p)	DDD1313
	14	FFC (17p)	DDD1314
	15	FFC (24p)	DDD1315
NSP	16	Earth Lead	DE010VF0
⚠	17	Power Transfomer	See Contrast table(2)
	18	Connector Assy	PF03PP-B05
	19	Connector Assy	PF03PP-C12
	20	• • • •	
	21	Power Knob	DAC2073
NSP	22	Silicon Lubber D5 L	DEB1456
	23	Bottom Cushion S4	DEC2506
	24	Heat Sink	DNG1102
	25	Earth Plate	DNH2532
	26	Bottom Plate	See Contrast table(2)
	27	Bottom Earth Plate	DNH2694
	28	Trans Plate	DNH2733
NSP	29	Chassis	See Contrast table(2)
	30	Insulator Assembly	DXA2069
	31	Damper	CNV6011
	32	Earth Spring	DBH1398
	33	Float Spring (G5)	DBH1494
	34	Front Sheet	DED1132
	35	Mecha Plate	DNH2642
	36	PCB Holder	DNK4524
	37	Float Base 04 Assy	DXB1838
	38	Laser Caution	See Contrast table(2)
NSP	39	Serial Label (UPC)	See Contrast table(2)
	40	Screw	BBT30P060FCC
	41	Screw	BBZ30P060FTC
	42	Screw	BBZ30P100FTC
	43	Screw	BBZ40P060FTC
	44	Screw	BPZ30P080FTB
	45	DM Screw (FTC)	DBA1260
	46	Screw	IPZ30P100FTC

(2) CONTRAST TABLE

CDJ-800MK2/KUCXJ, /WYXJ5 and RLFXJ types are constructed the same except for the following:

Mark	No.	Symbol and Description	CDJ-800MK2/ KUCXJ	CDJ-800MK2/ WYXJ5	CDJ-800MK2/ RLFXJ
⚠	2	AC IN ASSY	DWR1430	DWR1429	DWR1432
⚠	3	TRANS ASSY	DWR1371	DWR1371	DWR1428
⚠	10	Fuse (T1.6A)	AEK7075	Not used	Not used
⚠	10	Fuse (800MA)	Not used	REK1021	REK1021
⚠	17	Power Transfomer	DTT1204	DTT1203	DTT1203
	26	Bottom Plate	DNK2689	DNK2689	DNK2691
	29	Chassis	DNK4518	DNK4517	DNK4519
	38	Laser Caution	DRW2308	DRW2308	DRW2248
NSP	39	Serial Label	DRW2311	VRW1629	VRW1629

2.3 CONTROL PANEL SECTION

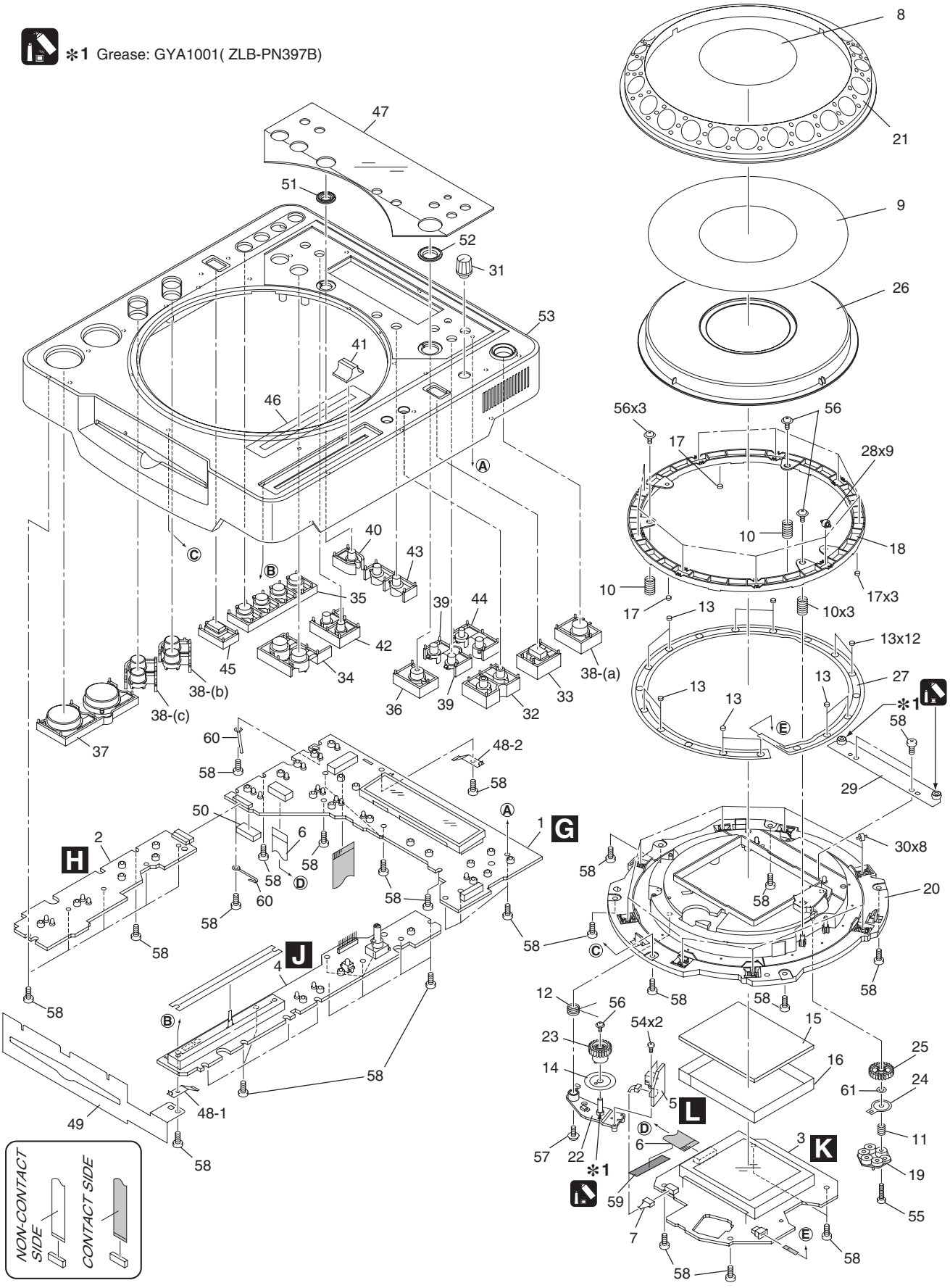

CONTROL PANEL SECTION parts List

Mark	No.	Description	Part No.
	1	DFLB Assy	DWG1623
	2	KSWB Assy	DWS1386
	3	JFLB Assy	DWG1624
	4	SLDB Assy	DWS1387
	5	JOGB Assy	DWG1625
	6	FFC	DDD1220
	7	Connector Assy	PF04PP-B07
	8	Jog Panel (PMMA)	DAH2182
	9	Jog Plate	DAH2438
	10	SW spring 25	DBH1514
	11	Gear spring 200	DBH1525
	12	ARM Sprimg	DBH1566
	13	SW Cushion HH48/2	DEC2538
	14	Encorder Plate	DEC2889
	15	Protector Sheet	DEC2945
	16	FL Sheet	DEC2946
	17	Ring Cushion L24/2.0	DEC2958
	18	SW Ring	DNK4070
	19	Adjust Plate	DNK4178
	20	Jog Holder	DNK4545
	21	Jog B	DNK4557
	22	Gear ARM	DNK4559
	23	Gear	DNK4560
	24	Smoother	DNK4561
	25	Load Gear A	DNK4562
	26	Jog A	DNK4586
	27	Sheet SW	DSX1065
	28	Roller A Assy	DXB1825
	29	Jog Stay Assy	DXB1876
	30	Roller B Assy	DXB1877
	31	Rotary Knob C	DAA1194
	32	TEMPO Knob	DAC2061
	33	VINYL Knob	DAC2063
	34	LOOP Knob	DAC2066
	35	Auto Beat Loop Knob	DAC2069
	36	Quick Return Knob	DAC2070
	37	PLAY Knob	DAC2286
	38	Set Knob (Eject)	DAC2287
	39	CALL Knob	DAC2289
	40	RELOOP Knob	DAC2291
	41	Slide Knob	DAC2292
	42	TEXT/A.CUE Knob	DAC2294
	43	Folder Search Knob	DAC2298
	44	DEL/MEMO Knob	DAC2299
	45	Reverse Knob	DAC2364
	46	Slide Sheet (gray)	DAH2374
	47	Display Panel	DAH2418
	48	Earth Plate (CU)	DBK1224
	49	Vessel Sheet	DEC2495
	50	FFC Guard	DEC2586
	51	Reloop Guard	DNK4057
	52	Q R Guard	DNK4058
	53	Control Panel	DNK4525
	54	Screw	BPZ20P060FTC
	55	Screw	BPZ20P100FTC
	56	Screw (FE)	DBA1265
	57	Screw	IPZ30P100FTC
	58	Screw	BPZ30P080FTB
	59	Ecsane Tape (10x50)	DEC2988
	60	Cord Clamper	RNH-184-0
	61	Washer	WA42D080D050

2.4 SLOT-IN MECHANISM SECTION

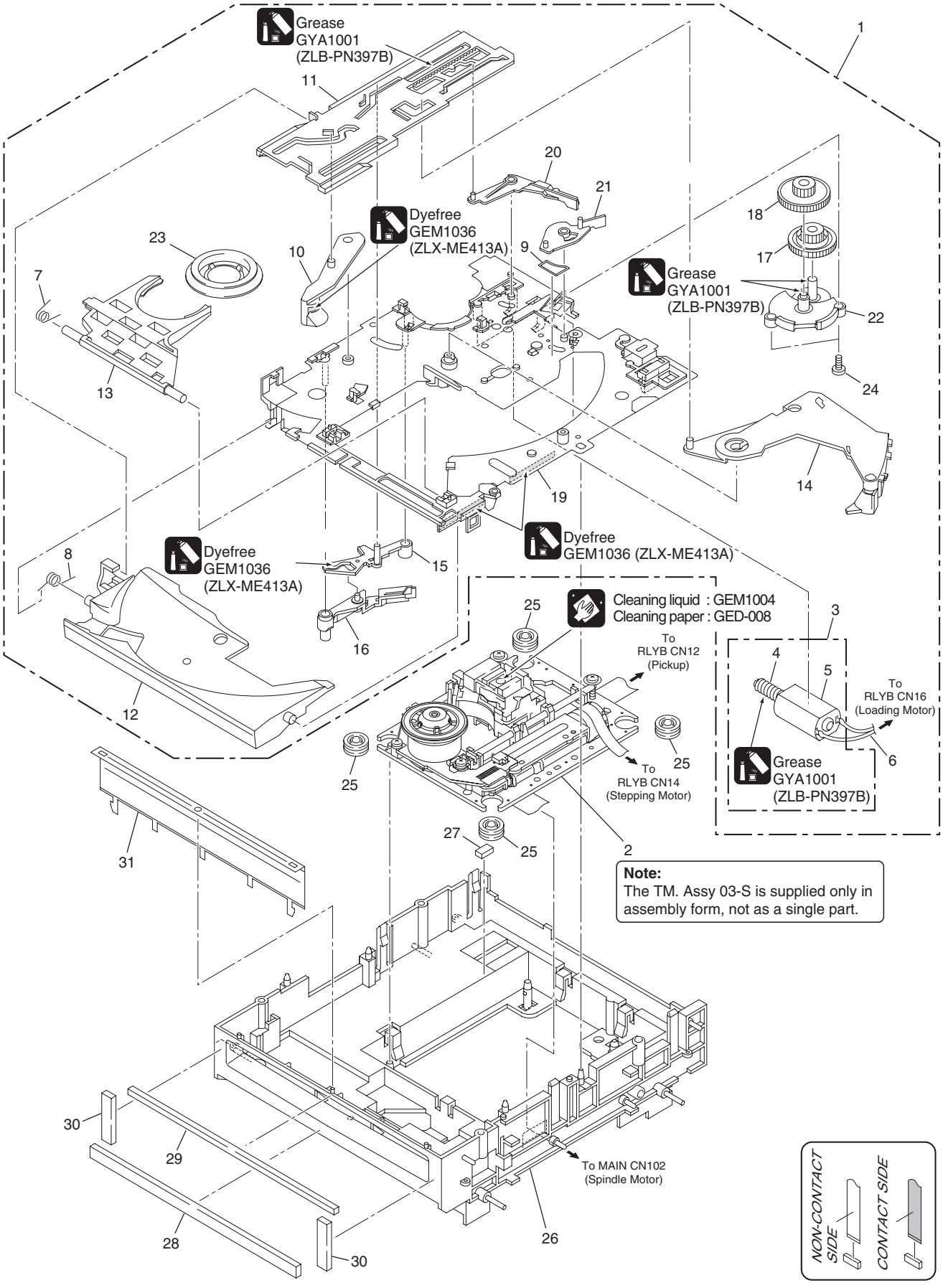

Note:
The TM. Assy 03-S is supplied only in assembly form, not as a single part.

SLOT-IN MECHANISM SECTION parts List

Mark	No.	Description	Part No.
NSP	1	Slot-in Mecha SV Assy	DXA2005
	2	TM. Assy 03-S	VXX3125
	3	Loading Motor Assy-S	DXX2510
NSP	4	Worm Gear	DNK3910
NSP	5	DC Motor S (ROHS)	DXM1230
	6	Connector Assy	PF02PY-B22
	7	Clamp Spring	DBH1374
	8	Guide Spring	DBH1375
	9	SW Lever Spacer SV	DEC2831
	10	Loading Lever	DNK3406
	11	Main Cam	DNK3407
	12	Disc Guide	DNK3478
	13	Clamp Arm	DNK3576
	14	Eject Lever	DNK3684
	15	Lever AP	DNK3835
	16	Lever BP	DNK3836
	17	Loading Gear	DNK3911
	18	Drive Gear	DNK3912
	19	Loading Base SV	DNK4369
	20	SW Lever SV1	DNK4370
	21	SW Lever SV2	DNK4371
	22	Gear Holder SV	DNK4372
	23	Clamper 04 Assy	DXB1859
	24	Screw	BPZ20P060FTC
	25	Floating Rubber (SI)	VEB1351
	26	Float Base 04 Assy	DXB1838
	27	Spacer POR (T3)	DEB1566
	28	Vessel Cushion A	DEC2852
	29	Vessel Cushion B	DEC2853
	30	Vessel Cushion C	DEC2854
	31	Front Sheet	DED1132