9. EXPLODED VIEWS AND PARTS LIST

NOTES: ● *Parts marked by "NSP" are generally unavailable because they are not in our Master Spare Parts List.*
● *The ⚠ mark found on some component parts indicates the importance of the safety factor of the part. Therefore, when replacing, be sure to use parts of identical designation.*
● *Screws adjacent to ▼ mark on product are used for disassembly.*
● *For the applying amount of lubricants or glue, follow the instructions in this manual. (In the case of no amount instructions, apply as you think it appropriate.)*

9.1 PACKING SECTION

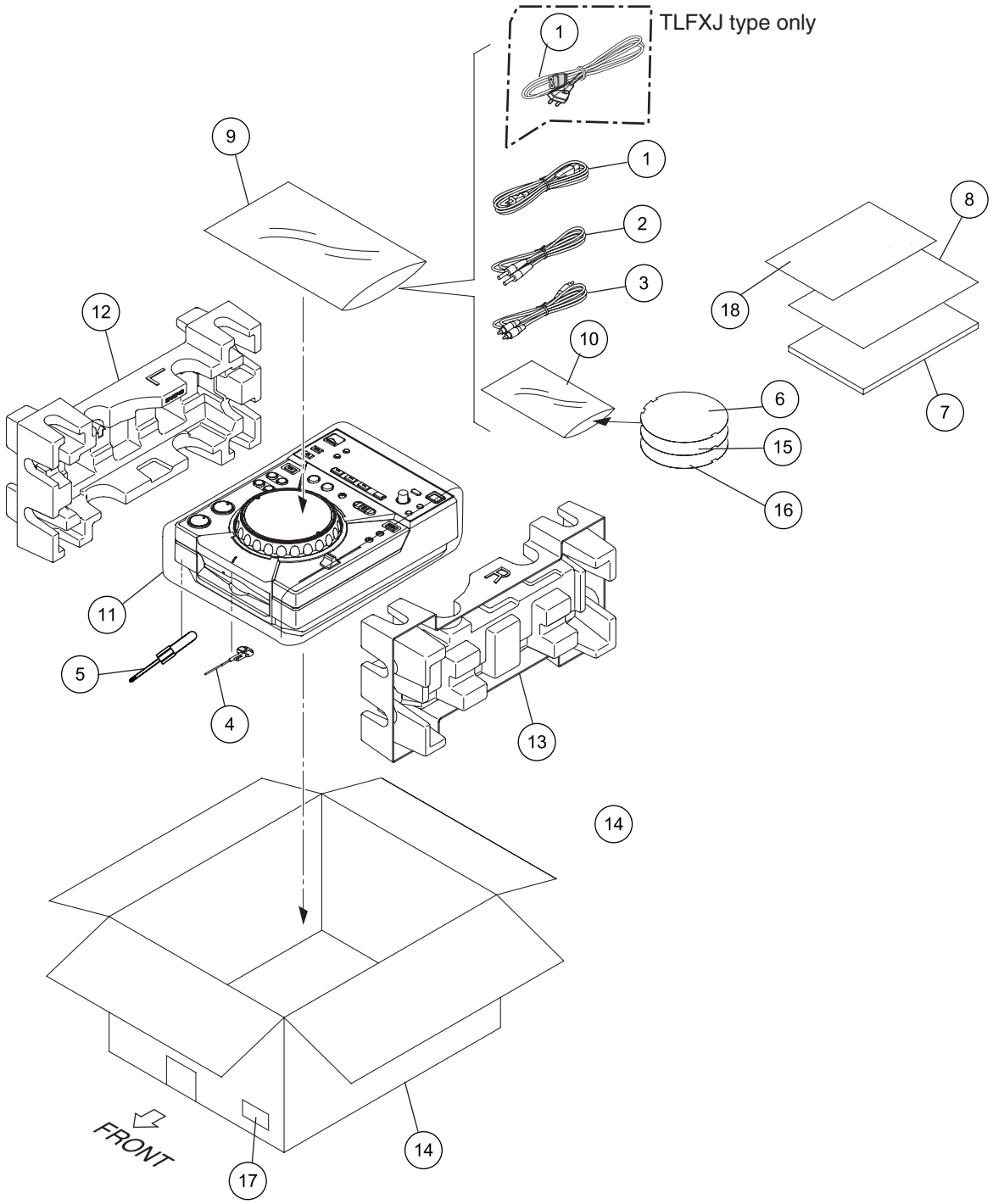

(1) PACKING SECTION PARTS LIST

Mark	No.	Description	Part No.
⚠	1	Power Cord	See Contrast table (2)
	2	Control Cable (L=1.0 m)	ADE7108
	3	Audio Cable (L=1.5 m)	VDE1064
	4	Forced Eject Pin (Housed in a groove in the bottom panel)	DEX1008
	5	Screw driver	DEX1022
	6	Jog Sheet 1	DAH2599
	7	Operating Instructions	See Contrast table (2)
NSP	8	Warranty Card	See Contrast table (2)
NSP	9	Polyethylene Bag (0.06 x 230 x 340)	AHG7117
NSP	10	Polyethylene Bag	DHL1174
	11	Packing Sheet	AHG7015
	12	Pad L	DHA1749
	13	Pad R	DHA1750
	14	Packing Case	See Contrast table (2)
	15	Jog Sheet 2	DAH2600
	16	Jog Sheet 3	DAH2601
NSP	17	Label	VRW1629
	18	Caution Card SR	See Contrast table (2)

(2) CONTRAST TABLE

CDJ-400/KUCXJ, WYXJ5 and TLFXJ are constructed the same except for the following:

Mark	No.	Symbol and Description	CDJ-400/KUCXJ	CDJ-400/WYXJ5	CDJ-400/TLFXJ
⚠	1	Power Cord	ADG7021	ADG1154	ADG1154
⚠	1	Power Cord	Not used	Not used	ADG7097
	7	Operation Instructions (English)	DRB1450	Not used	Not used
	7	Operation Instructions (English, French, German, Italian, Dutch, Spanish, Russian)	Not used	DRB1451	Not used
	7	Operation Instructions (English, Spanish, Chinese)	Not used	Not used	DRB1452
NSP	8	Warranty Card	ARY7043	ARY7107	Not used
	14	Packing Case	DHG2710	DHG2709	DHG2711
	18	Caution Card SR	Not used	Not used	ARM7064

9.2 EXTERIOR SECTION

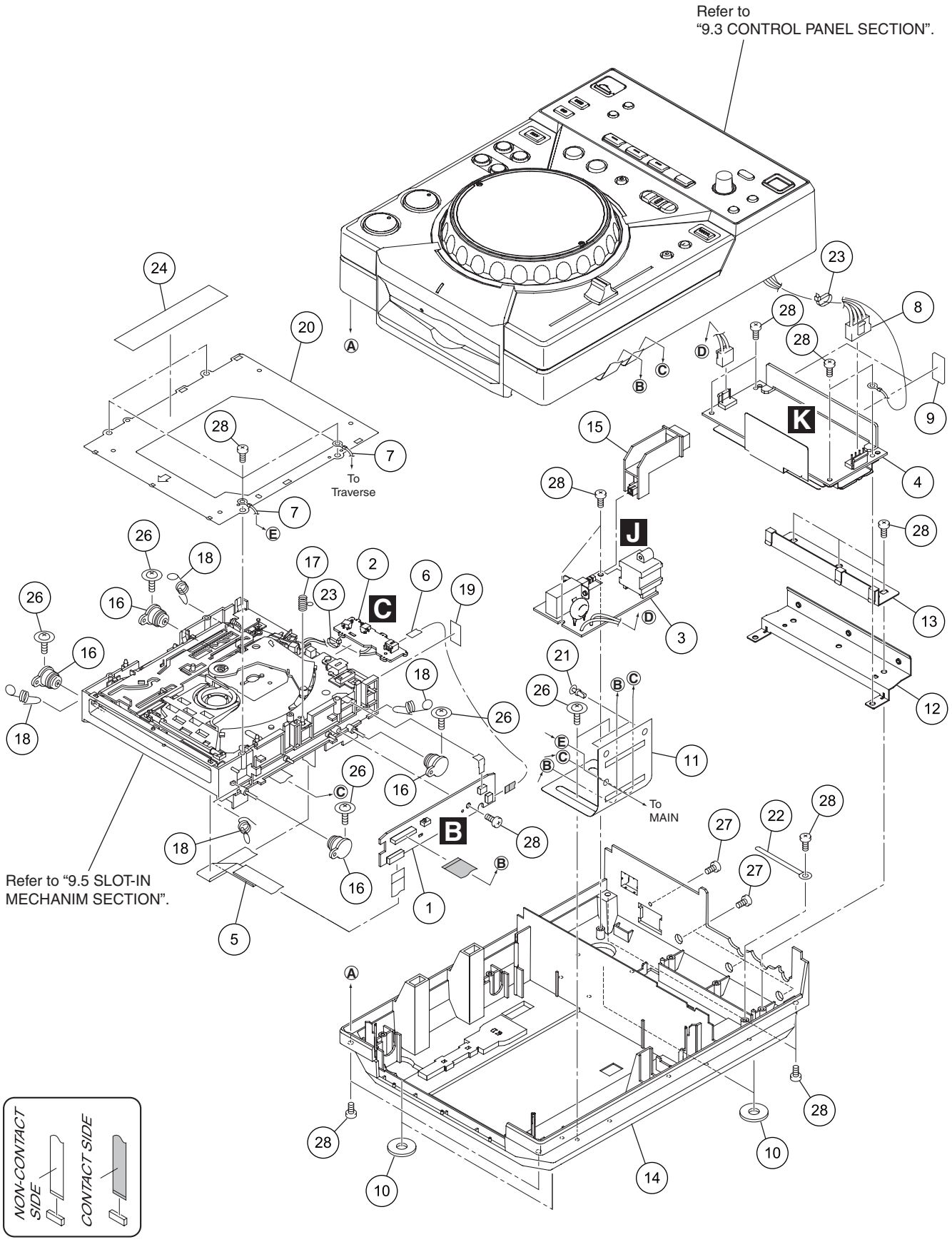

(1) EXTERIOR SECTION PARTS LIST

Mark	No.	Description	Part No.
	1	CNCT Assy	DWX2762
	2	SLMB Assy	DWS1404
	3	ACIN Assy	See Contrast table (2)
⚠	4	SW POWER SUPPLY	DWR1443
	5	24P FFC	DDD1331
	6	5P FFC	DDD1370
NSP	7	Earth Lead Wire	DE010VE0
	8	Connector Assy	PF04EE-S22
NSP	9	Silicone Sheet D5 L	DEB1456
	10	Insulator MO	DEC2250
	11	Cable Protector	DEC3072
	12	Heat Plate 1	DNH2814
	13	Heat Plate 2	DNH2815
NSP	14	Chassis	See Contrast table (2)
	15	Power Knob	DNK5017
	16	Damper	CNV6011
	17	Earth Spring	DBH1398
	18	Float Spring G5	DBH1494
	19	Tape	DEC3053
	20	Mecha. Plate (FE)	DNH2642
	21	Push Rivet	XEC3034
	22	Cord Clamper	RNH-184-0
	23	Binder (SKB-90BK)	ZCA-SKB90BK
	24	Laser Caution	See Contrast table (2)
	25	•••••	
	26	DM Screw (FTC)	DBA1260
	27	Screw	PBZ30P080FTB
	28	Screw	BPZ30P080FTB

(2) CONTRAST TABLE

CDJ-400/KUCXJ, WYXJ5 and TLFXJ are constructed the same except for the following:

Mark	No.	Symbol and Description	CDJ-400/KUCXJ	CDJ-400/WYXJ5	CDJ-400/TLFXJ
	3	ACIN Assy	DWX2800	DWX2766	DWX2766
NSP	14	Chassis	DNK4984	DNK4983	DNK4985
	24	Laser Caution	DRW2308	DRW2308	DRW2248

9.3 CONTROL PANEL SECTION

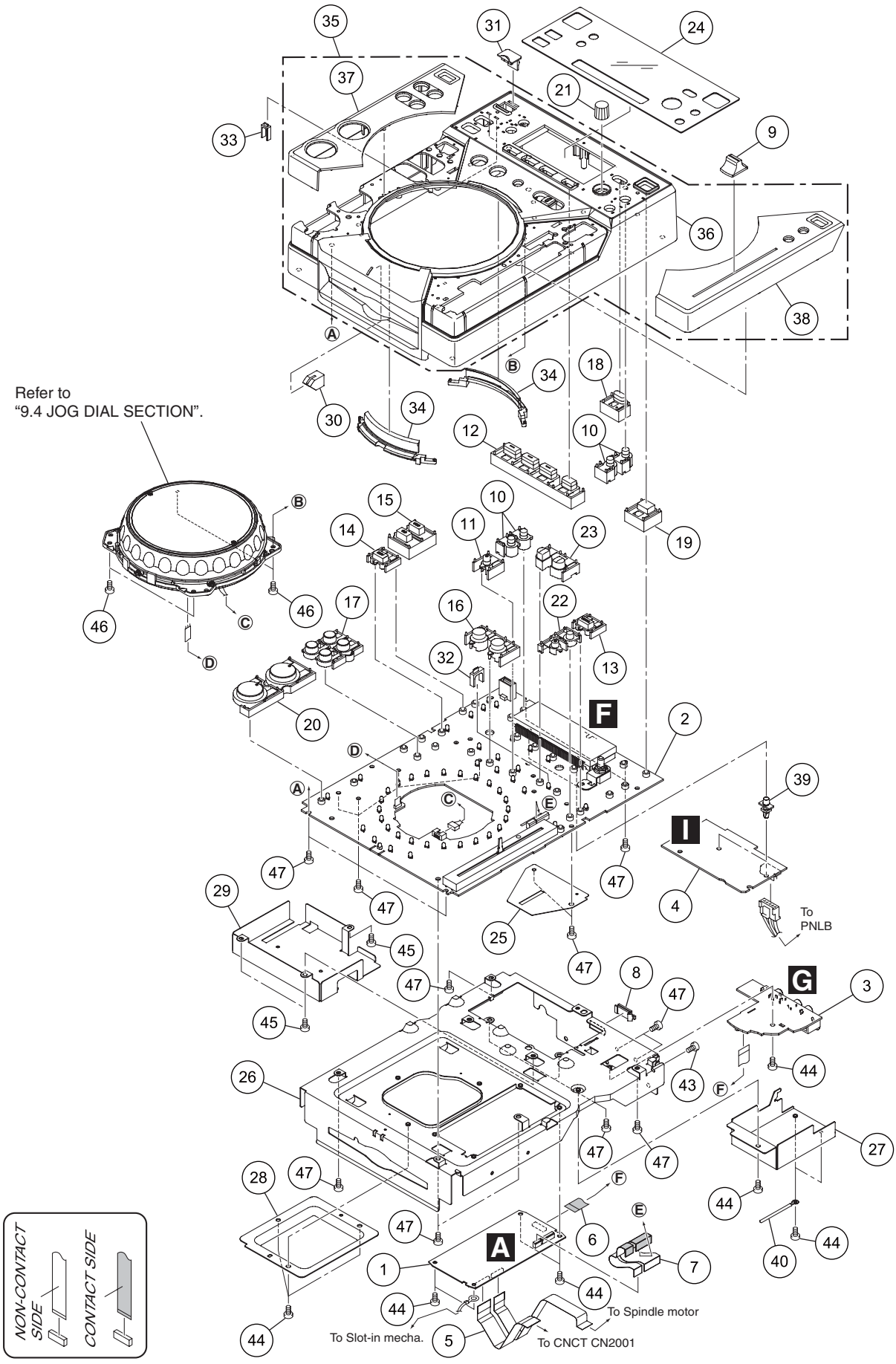

CONTROL PANEL SECTION PARTS LIST

Mark	No.	Description	Part No.
NSP	1	MAIN Assy	DWG1652
	2	PNLB Assy	DWX2756
	3	JACB Assy	DWX2759
	4	REGB Assy	DWR1442
	5	32P FFC	DDD1371
	6	17P FFC	DDD1372
	7	23P FFC	DDD1374
	8	Blind Cap	DNK4218
	9	Slide Knob	DAC2406
	10	TIME Knob	DAC2407
	11	RELOOP Knob	DAC2409
	12	JOG EFFECT Knob	DAC2410
	13	VINYL Knob	DAC2411
	14	REVERSE Knob	DAC2412
	15	Set Knob (SELECT)	DAC2413
	16	Set Knob (LOOP)	DAC2414
	17	Set Knob (SEARCH)	DAC2415
	18	BACK Knob	DAC2416
	19	EJECT Knob	DAC2417
	20	PLAY Button	DAC2418
	21	Dial Knob	DAC2419
	22	TEMPO Knob	DAC2423
	23	BEAT LOOP Knob	DAC2424
	24	Display Panel	DAH2549
	25	FFC guard	DEC3056
	26	MAIN PCB Stay	DNH2800
	27	Shield Case	DNH2801
	28	JOG Support	DNH2808
	29	Shield Case 2	DNH2813
	30	FRONT Lens	DNK4997
	31	USB Cover	DNK4999
	32	BEAT LOOP Lens	DNK5042
	33	MEMORY Lens	DNK5049
	34	JOG Lens	DNK5078
	35	Control Panel Assy	DXB1977
	36	Control Panel	DNK5030
	37	Top Panel (L)	DNK5031
	38	Top Panel (R)	DNK5073
	39	Locking Card Spacer	VEC2234
	40	Cord Clamper	RNH-184-0
	41	•••••	
	42	•••••	
	43	Screw (M3 x 5)	DBA1340
	44	Screw	BBZ30P060FTC
	45	Screw	BPZ30P100FTC
	46	Screw	CPZ30P080FTB
	47	Screw	BPZ30P080FTB

9.4 JOG DIAL SECTION

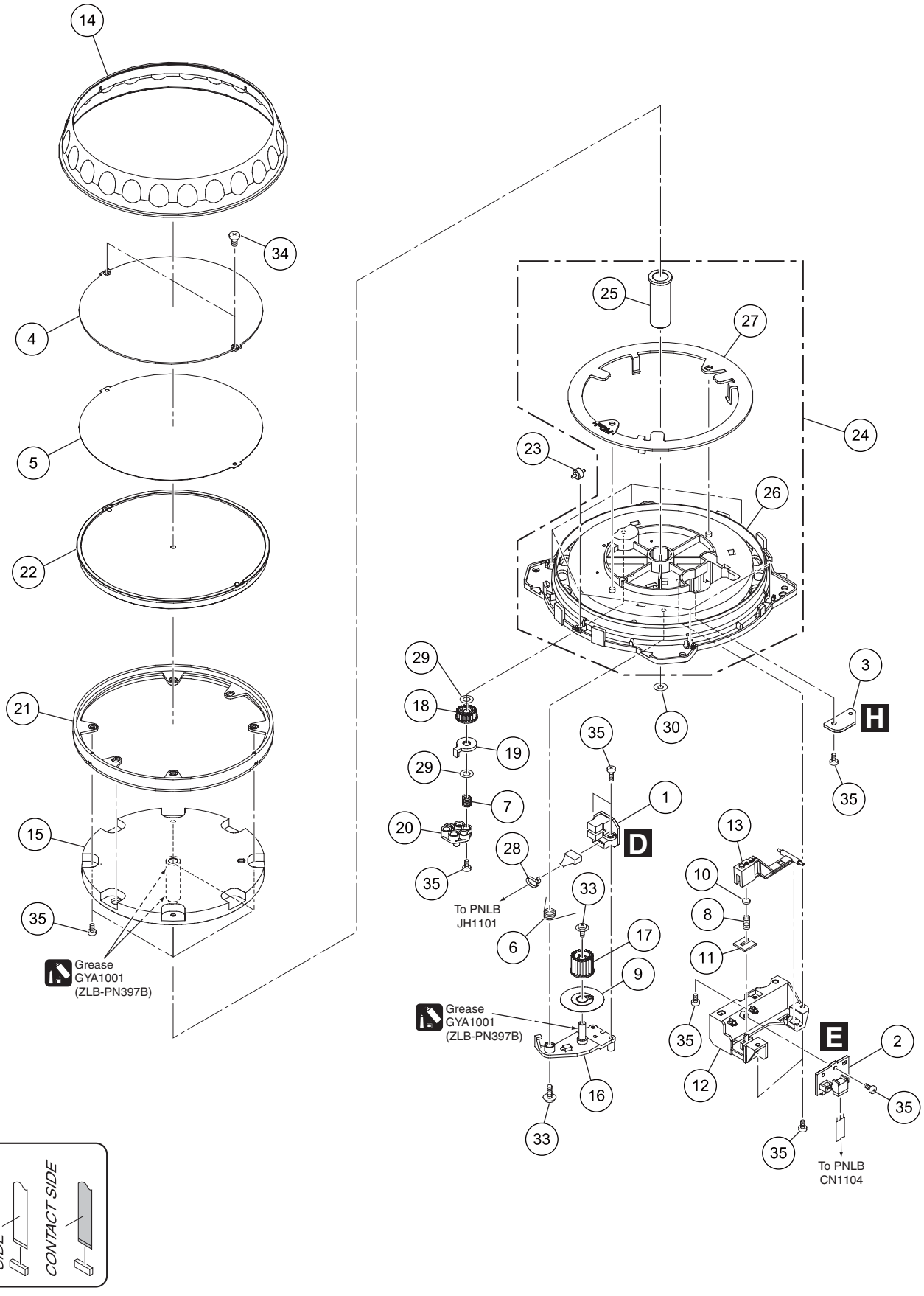

JOG DIAL SECTION PARTS LIST

Mark	No.	Description	Part No.
	1	JOGB Assy	DWX2760
	2	TCHB Assy	DWX2761
	3	STPB Assy	DWX2792
	4	Jog Plate	DAH2565
	5	Jog Sheet	DAH2581
	6	Arm Spring	DBH1612
	7	Load Spring	DBH1632
	8	Lever Spring	DBH1626
	9	Encoder Plate	DEC2889
	10	Lever Cushion (A)	DEC3001
	11	Lever Cushion (B)	DEC3002
	12	Lever Holder	DNK4762
	13	Jog Lever	DNK4763
	14	Jog B	DNK4932
	15	Jog Shaft	DNK4934
	16	Encoder Arm	DNK4936
	17	Encoder Gear	DNK4937
	18	Load Gear	DNK4938
	19	Load Smoother	DNK4939
	20	Adjust Plate	DNK4943
	21	Ring Lens	DNK4979
	22	Jog A Assy	DXA2122
	23	Roller B Assy	DXB1877
	24	Jog Holder Assy	DXB1982
	25	Shaft Holder	DLA2042
	26	Jog Holder	DNK4933
	27	Slide Ring	DNK4935
	28	Binder (SKB-90BK)	ZCA-SKB90BK
	29	Washer	WA42D080D025
	30	Washer	WT32D080D050
	31	•••••	
	32	•••••	
	33	Screw (FE)	DBA1265
	34	Screw	DBA1347
	35	Screw	BPZ20P060FTC

9.5 SLOT-IN MECHANISM SECTION

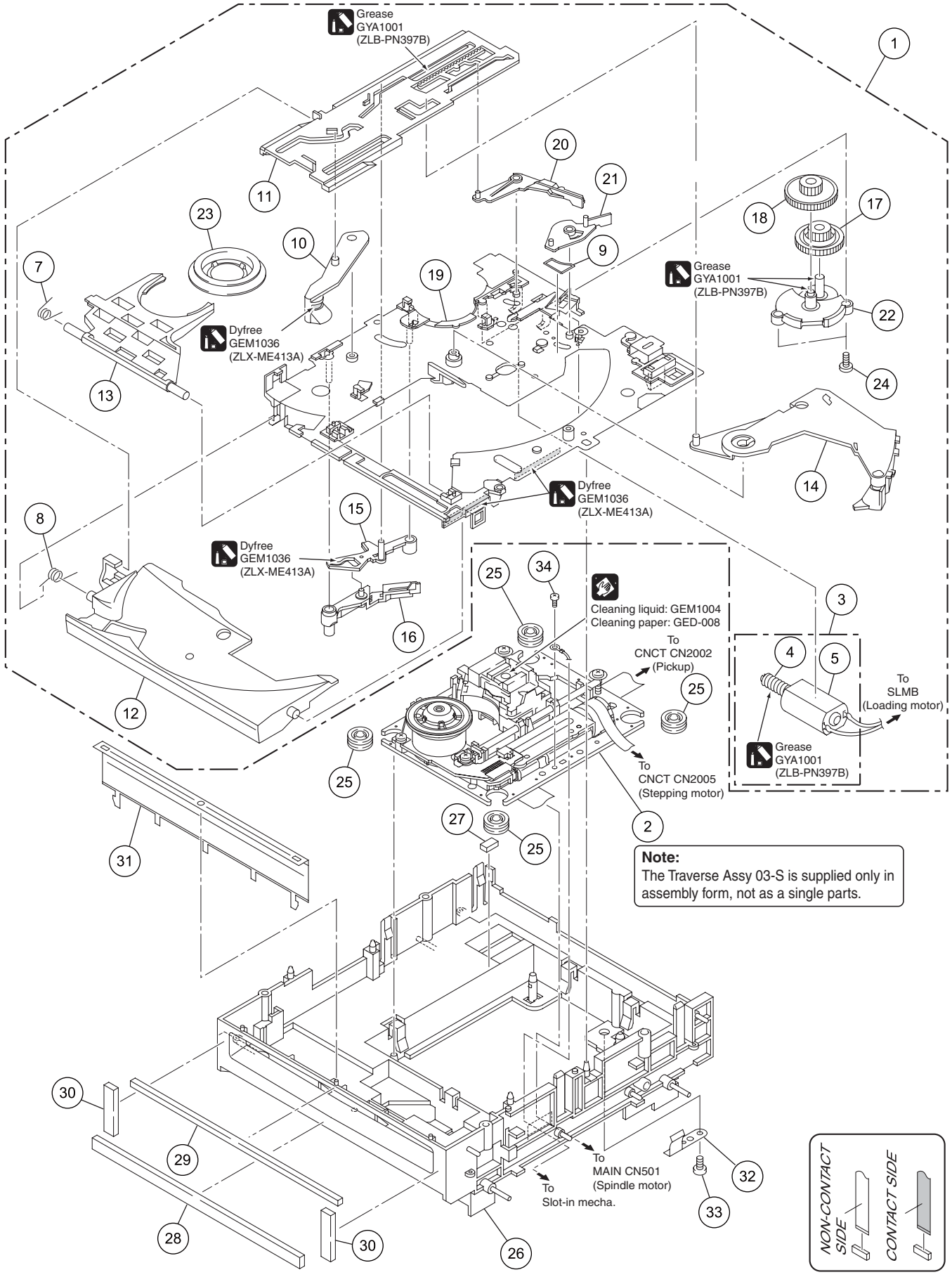

Note:
The Traverse Assy 03-S is supplied only in assembly form, not as a single parts.

SLOT-IN MECHANISM SECTION PARTS LIST

Mark	No.	Description	Part No.
NSP	1	Slot-in Mechanism Assy	DXA2121
	2	03 Traverse Assy (Ro)	VXX3125
	3	Loading Motor Assy-S	DXX2510
NSP	4	Worm Gear	DNK3910
NSP	5	DC Motor S (ROHS)	DXM1230
	6	•••••	
	7	Clamp Spring	DBH1374
	8	Guide Spring	DBH1375
	9	SW Lever Spacer SV	DEC2831
	10	Loading Gear	DNK3406
	11	Main Cam	DNK3407
	12	Disc Guide	DNK3478
	13	Clamp Arm	DNK3576
	14	Eject Lever	DNK3684
	15	Lever AP	DNK3835
	16	Lever BP	DNK3836
	17	Loading Gear	DNK3911
	18	Drive Gear	DNK3912
	19	Loading Base SV	DNK4369
	20	SW Lever SV1	DNK4370
	21	SW Lever SV2	DNK4371
	22	Gear Holder SV	DNK4372
	23	Clamper 04 Assy	DXB1859
	24	Screw	BPZ20P060FTC
	25	Float Rubber (SI)	VEB1351
	26	Float Base 04 Assy	DXB1838
	27	Spacer POR (T3)	DEB1566
	28	Vessel Cushion A	DEC2852
	29	Vessel Cushion B	DEC2853
	30	Vessel Cushion C	DEC2854
	31	Front Sheet	DED1132
	32	FPC Guard	DBK1282
	33	Screw	BPZ30P080FTB
	34	Screw	BBZ26P040FTC