9. EXPLODED VIEWS AND PARTS LIST

NOTES:
- *Parts marked by "NSP" are generally unavailable because they are not in our Master Spare Parts List.*
- *The ⚠ mark found on some component parts indicates the importance of the safety factor of the part. Therefore, when replacing, be sure to use parts of identical designation.*
- *Screws adjacent to ▼ mark on product are used for disassembly.*
- *For the applying amount of lubricants or glue, follow the instructions in this manual. (In the case of no amount instructions, apply as you think it appropriate.)*

9.1 PACKING SECTION

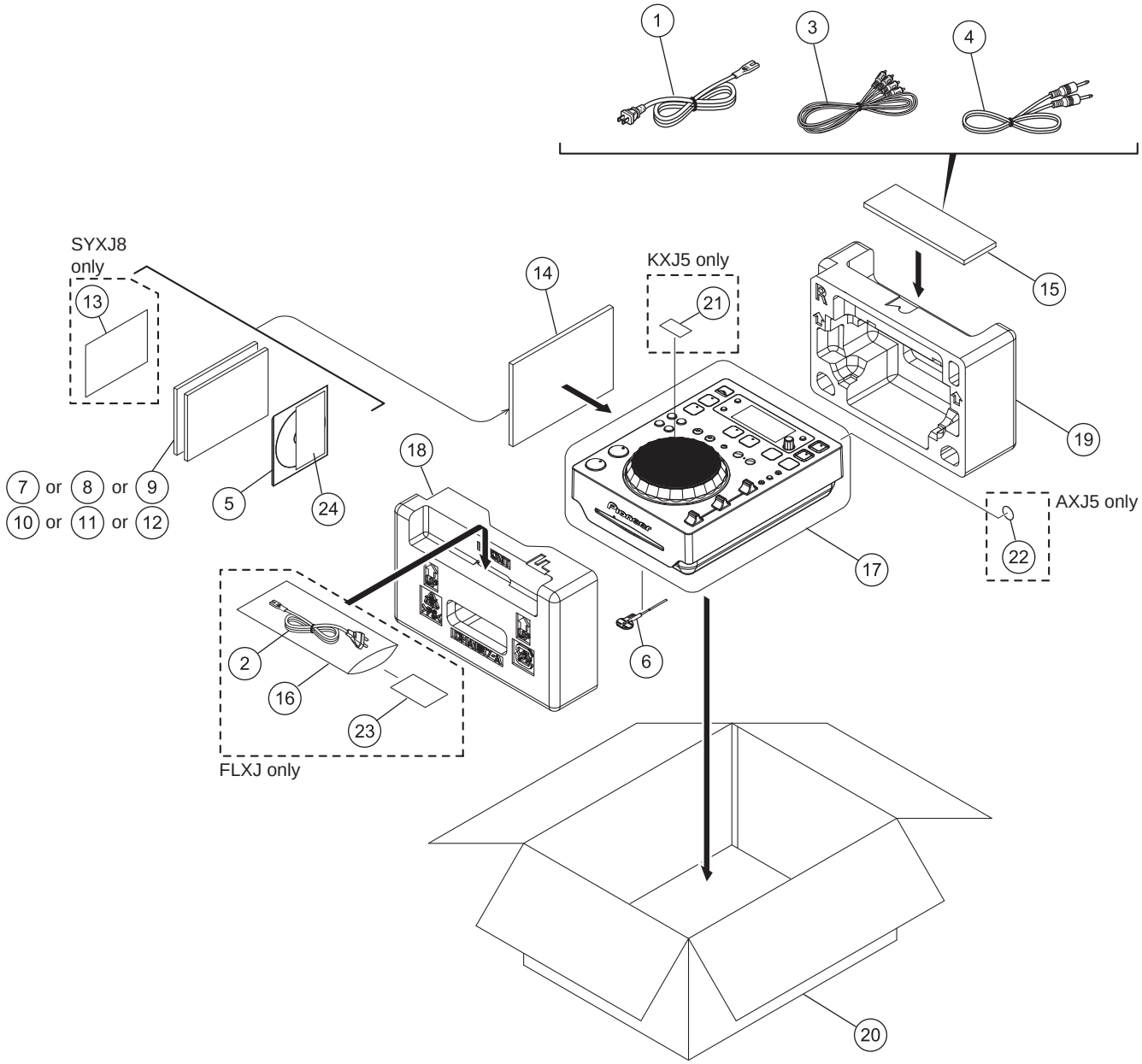

(1) PACKING SECTION PARTS LIST

Mark	No.	Description	Part No.
⚠	1	Power Cable	See Contrast table (2)
⚠	2	Power Cord (Taiwan)	See Contrast table (2)
	3	Audio Cable	XDE3045
	4	Control Cord	XDE3063
	5	CD-ROM (rekordbox license key attached)	DXX2653
	6	Disc Force Eeject Pin (mounted on bottom of product)	DEX1008
	7	Operating Instructions	See Contrast table (2)
	8	Operating Instructions	See Contrast table (2)
	9	Operating Instructions	See Contrast table (2)
	10	Operating Instructions)	See Contrast table (2)
	11	Operating Instructions	See Contrast table (2)
	12	Operating Instructions	See Contrast table (2)
NSP	13	Warranty Card	See Contrast table (2)
NSP	14	Polyethylene Bag	AHG7117
	15	Vinyl Bag	Z21-013
	16	Vinyl Bag	See Contrast table (2)
	17	Packing Sheet	AHG7015
	18	Pad F	See Contrast table (2)
	19	Pad R	See Contrast table (2)
	20	Packing Case	See Contrast table (2)
	21	Recycle Label (M)	See Contrast table (2)
NSP	22	CCC S & E Label	See Contrast table (2)
	23	Caution Card SB	See Contrast table (2)
NSP	24	License Key Label Assy	DXA2190

(2) CONTRAST TABLE

CDJ-350/SYXJ8, CUXJ, FLXJ, KXJ5 and AXJ5 are constructed the same except for the following:

Mark	No.	Symbol and Description	CDJ-350 /SYXJ8	CDJ-350 /CUXJ	CDJ-350 /FLXJ	CDJ-350 /KXJ5	CDJ-350 /AXJ5
⚠	1	Power Cable	ADG1154	ADG7022	ADG1154	XDG3054	ADG7079
⚠	2	Power Cord (Taiwan)	Not used	Not used	ADG7097	Not used	Not used
	7	Operating Instructions (En, Fr, De)	DRB1508	Not used	Not used	Not used	Not used
	8	Operating Instructions (It, Nl, Es, Ru)	DRB1534	Not used	Not used	Not used	Not used
	9	Operating Instructions (En, Fr)	Not used	DRB1507	Not used	Not used	Not used
	10	Operating Instructions (En, Es, Zhtw)	Not used	Not used	DRB1509	Not used	Not used
	11	Operating Instructions (Ko)	Not used	Not used	Not used	DRB1511	Not used
	12	Operating Instructions (Zhcn, En)	Not used	Not used	Not used	Not used	DRB1510
NSP	13	Warranty Card	ARY7107	Not used	Not used	Not used	Not used
	16	Vinyl Bag	Not used	Not used	Z21-013	Not used	Not used
	18	Pad F	DHA1817	DHA1817	DHA1817	DHA1819	DHA1817
	19	Pad R	DHA1818	DHA1818	DHA1818	DHA1820	DHA1818
	20	Packing Case	DHG2957	DHG2958	DHG2960	DHG2962	DHG2961
	21	Recycle Label (M)	Not used	Not used	Not used	DRW2307	Not used
NSP	22	CCC S & E Label	Not used	Not used	Not used	Not used	DRW2310
	23	Caution Card SB	Not used	Not used	ARM7064	Not used	Not used

9.2 EXTERIOR SECION

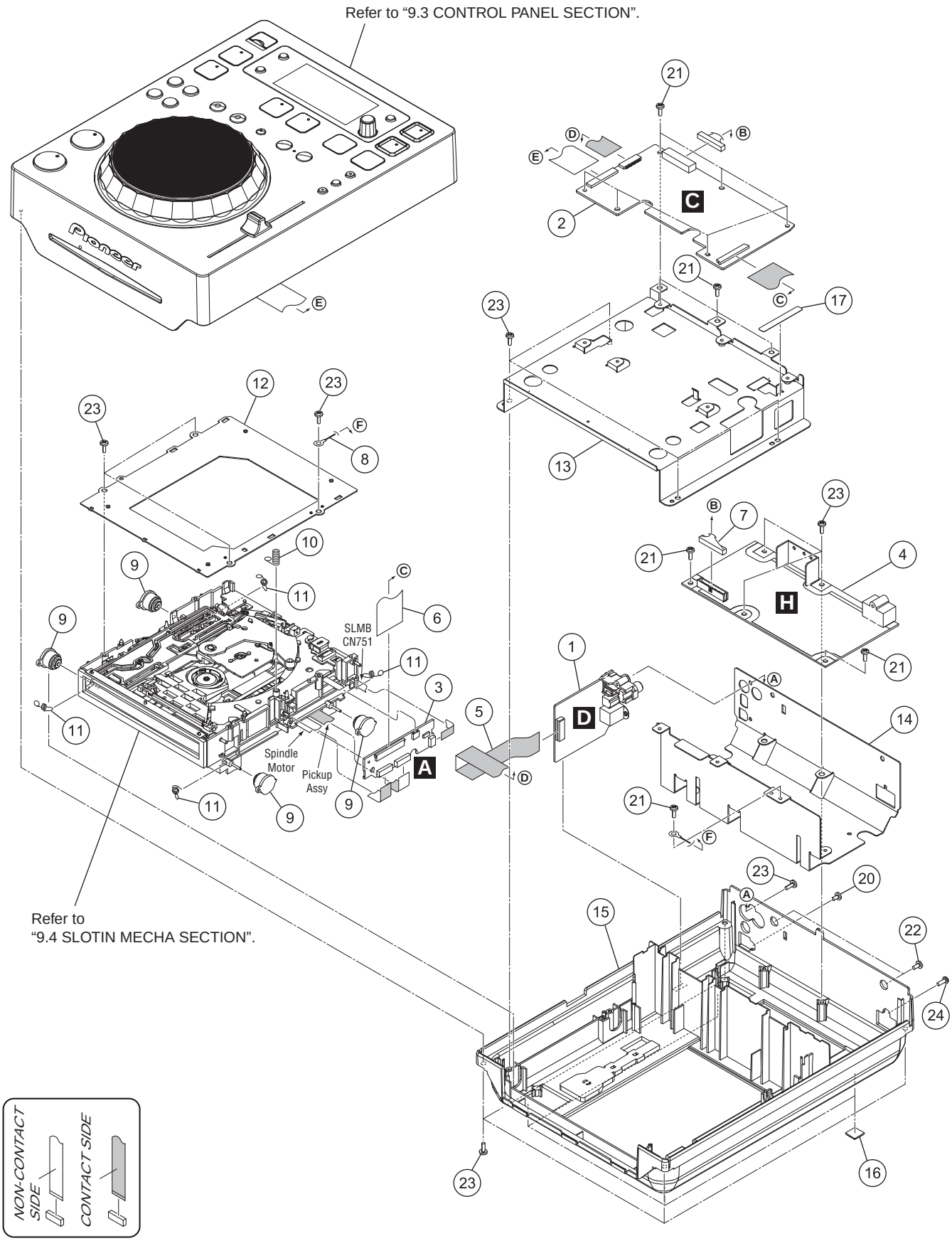

(1) EXTERIOR SECTION PARTS LIST

Mark	No.	Description	Part No.
	1	JACK Assy	DWX3107
	2	MAIN Assy	DWX3105
	3	CNCT Assy	DWX3111
⚠	4	SMPS Assy	See Contrast table (2)
	5	17P FFC	DDD1494
	6	50P FFC	DDD1536
	7	Connector Assy 13P	DKP3865
	8	Earth Lead wire	DE007VE0
	9	Damper	CNV6011
	10	Earth Spring	DBH1398
	11	Float Spring (G5)	DBH1494
	12	Mecha Plate	DNH2642
	13	Main PCB Stay	DNH2914
	14	Rear Chassis	DNH2915
⚠NSP	15	Chassis	See Contrast table (2)
	16	Rubber Foot	VEB1349
NSP	17	P. U. Caution Label	DRW2448
	18	• • • • •	
	19	• • • • •	
	20	Screw (M3 x 5)	DBA1340
	21	Screw	ABZ30P060FTC
	22	Screw	BBZ30P060FTB
	23	Screw	BPZ30P080FTB
	24	Screw	PPZ30P080FTB

(2) CONTRAST TABLE

CDJ-350/SYXJ8, CUXJ, FLXJ, KXJ5 and AXJ5 are constructed the same except for the following:

Mark	No.	Symbol and Description	CDJ-350 /SYXJ8	CDJ-350 /CUXJ	CDJ-350 /FLXJ	CDJ-350 /KXJ5	CDJ-350 /AXJ5
⚠	4	SMPS Assy	DWR1482	DWR1481	DWR1482	DWR1482	DWR1482
⚠ NSP	15	Chassis	DNK5576	DNK5780	DNK5781	DNK5784	DNK5782

9.3 CONTROL PANEL SECTION

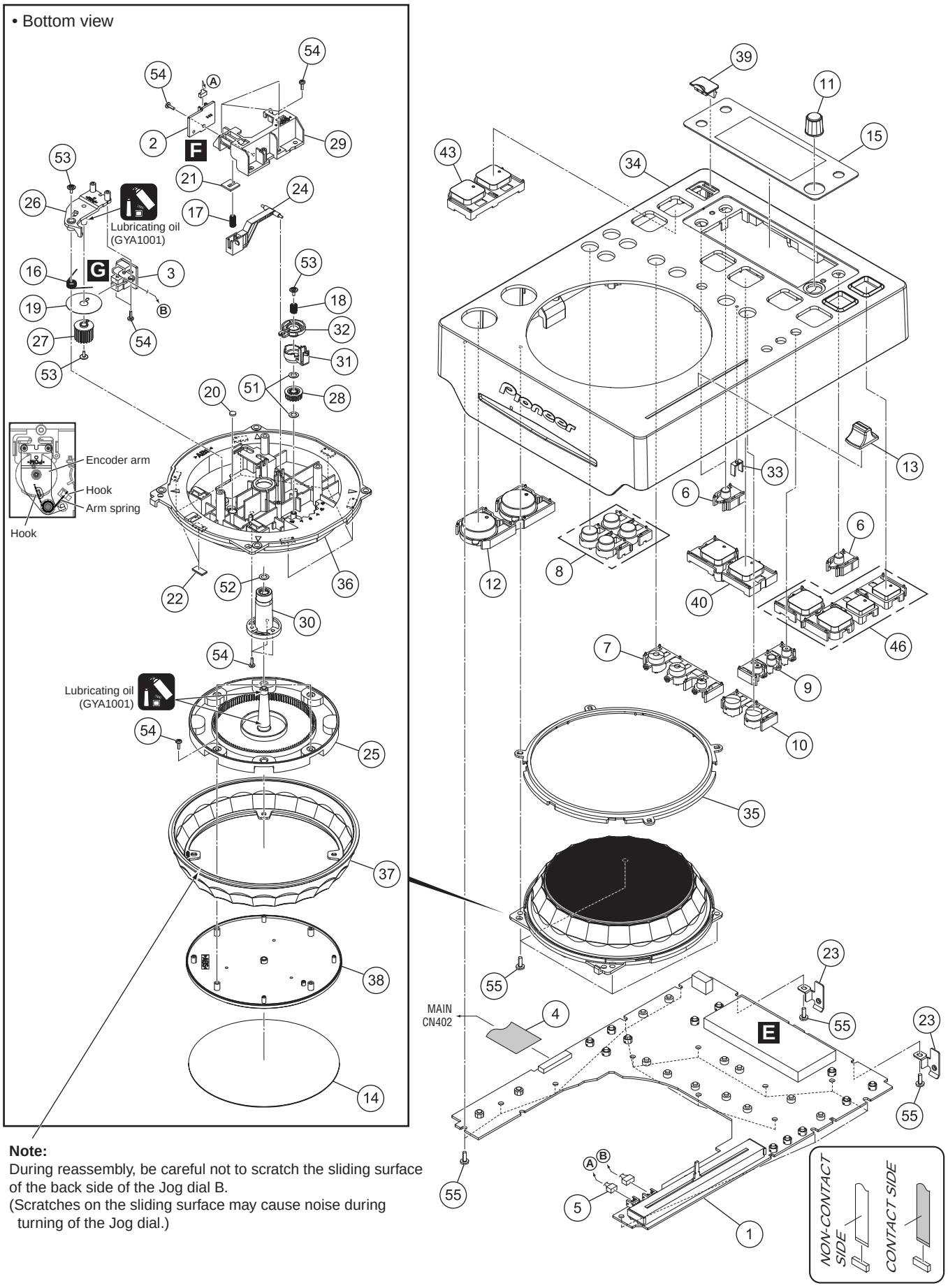

Note:
During reassembly, be careful not to scratch the sliding surface of the back side of the Jog dial B.
(Scratches on the sliding surface may cause noise during turning of the Jog dial.)

CONTROL PANEL SECTION PARTS LIST

Mark	No.	Description	Part No.
	1	PNLB Assy	DWX3106
	2	TCHB Assy	DWX3109
	3	JOGB Assy	DWX3124
	4	27P FFC	DDD1537
	5	Connector Assy	PF03PP-B17
	6	Display Button	DAC2574
	7	Loop Button	DAC2575
	8	Search Button	DAC2576
	9	Vinyl Tempo Button	DAC2577
	10	Beat Loop Button	DAC2578
	11	Dial Knob	DAC2579
	12	Play Button	DAC2580
	13	Slide Knob	DAC2594
	14	Jog Plate	DAH2775
	15	Display Panel	DAH2789
	16	Arm Spring	DBH1612
	17	Lever Spring	DBH1726
	18	Load Spring	DBH1727
	19	Encorder Plate	DEC2889
	20	Lever Cushion (A)	DEC3001
	21	Lever Cushion (B)	DEC3002
	22	Slide Sheet	DEC3227
	23	Ground Holder	DNH2917
	24	Jog Lever	DNK4763
	25	Jog Shaft	DNK4934
	26	Encorder Arm	DNK4936
	27	Encorder Gear	DNK4937
	28	Load Gear	DNK5178
	29	Lever Holder	DNK5206
	30	Shaft Holder	DNK5514
	31	Cam Plate	DNK5546
	32	Push Plate	DNK5547
	33	Beat Loop Lens	DNK5548
⚠	34	Control Panel	DNK5549
	35	Color Ring A	DNK5550
	36	Jog Holder	DNK5552
	37	Jog Dial B	DNK5571
	38	Jog Dial A	DNK5574
	39	USB Cover	DNK5657
	40	Sourse Select B Assy	DXB2063
	41	• • • • •	
	42	• • • • •	
	43	USB Stop Button Assy	DXB2064
	44	• • • • •	
	45	• • • • •	
	46	Standby Button Assy	DXB2065
	47	• • • • •	
	48	• • • • •	
	49	• • • • •	
	50	• • • • •	
	51	Washer	WA41D070D025
	52	Washer	WT32D080D050
	53	Screw (FE)	DBA1265
	54	Screw	BPZ20P060FTC
	55	Screw	BPZ30P080FTB

9.4 SLOTIN MECHA SECTION

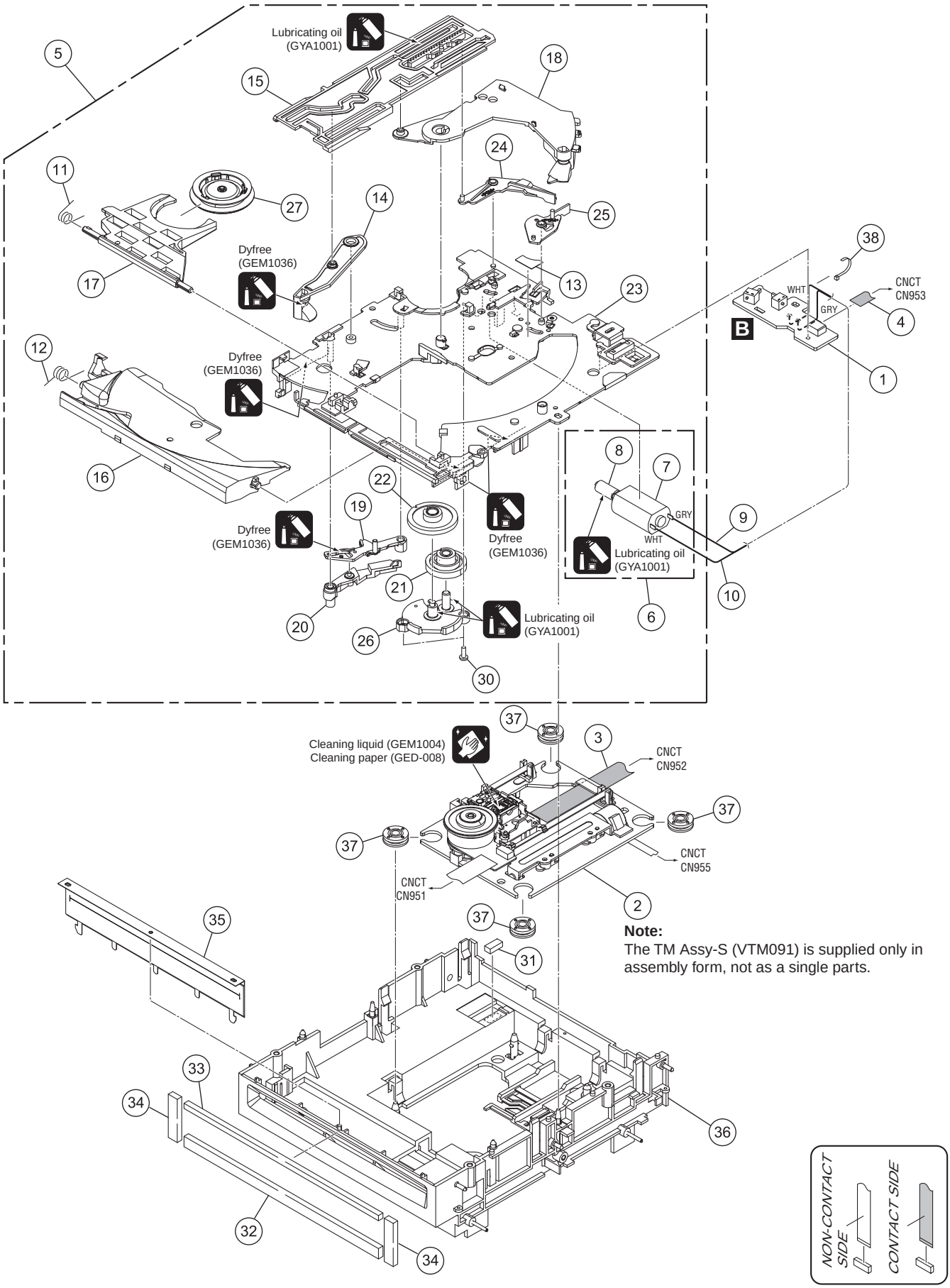

Note:
The TM Assy-S (VTM091) is supplied only in assembly form, not as a single parts.

SLOTIN MECHA SECTION PARTS LIST

Mark	No.	Description	Part No.
	1	SLMB Assy	DWX3108
	2	TM Assy-S (VTM091)	DXX2616
	3	24P FFC	DDD1491
	4	5P FFC	DDD1492
NSP	5	SLOTIN MECHA Assy	DXA2206
	6	Loading Motor Assy-S	DXX2615
NSP	7	DC Motor	DXM1384
NSP	8	Worm Gear	DNK3910
	9	Lead Wire	ZWNN1007G28-8-06A
	10	Lead Wire	ZWNN1007G28-9-06A
	11	Clamp Spring	DBH1374
	12	Guide Spring	DBH1375
	13	SW. Lever Spacer SV	DEC2831
	14	Loading Lever	DNK3406
	15	Main Cam	DNK3407
	16	Disc Guide	DNK3478
	17	Clamp Arm	DNK3576
	18	Eject Lever	DNK3684
	19	Lever AP	DNK3835
	20	Lever BP	DNK3836
	21	Loading Gear	DNK3911
	22	Drive Gear	DNK3912
	23	Loading Base SV	DNK4369
	24	SW Lever SV1	DNK4370
	25	SW Lever SV2	DNK4371
	26	Gear Holder SV	DNK4372
	27	Clamper Assy-S	DXX2661
	28	• • • • •	
	29	• • • • •	
	30	Screw	BPZ20P060FTC
	31	Spacer POR (T3)	DEB1566
	32	Vessel Cushion A	DEC2852
	33	Vessel Cushion B	DEC2853
	34	Vessel Cushion C	DEC2854
	35	Front Sheet	DED1132
	36	Float Base 05 Assy	DXB2068
	37	Floating Rubber (SI)	VEB1351
	38	Binder	ZCA-SKB90BK