9. EXPLODED VIEWS AND PARTS LIST

NOTES: ● *Parts marked by "NSP" are generally unavailable because they are not in our Master Spare Parts List.*
● *The ⚠ mark found on some component parts indicates the importance of the safety factor of the part. Therefore, when replacing, be sure to use parts of identical designation.*
● *Screws adjacent to ▼ mark on product are used for disassembly.*
● *For the applying amount of lubricants or glue, follow the instructions in this manual. (In the case of no amount instructions, apply as you think it appropriate.)*

9.1 PACKING SECTION

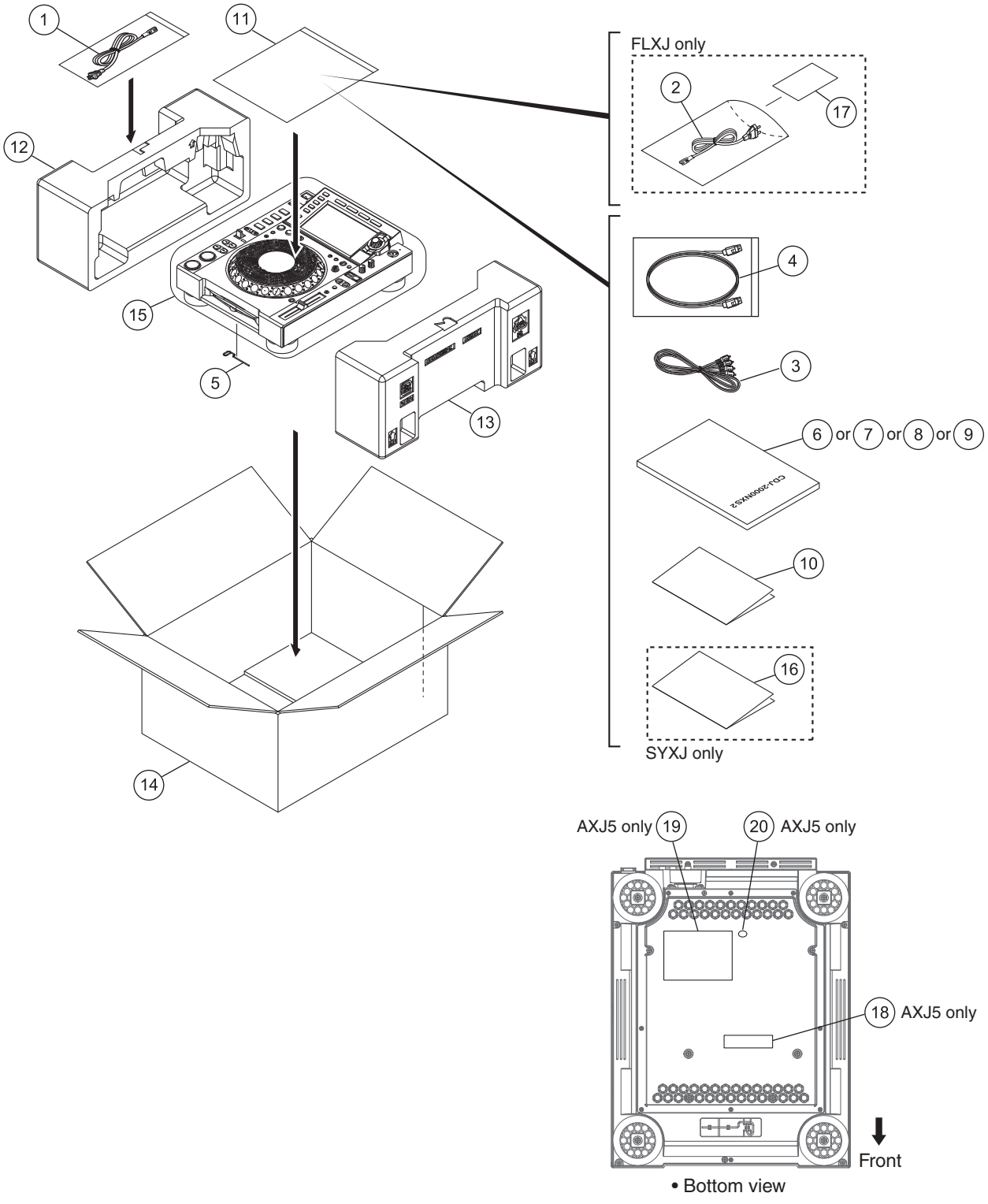

(1) PACKING SECTION PARTS LIST

Mark	No.	Description	Part No.
⚠	1	Power Cord	See Contrast table (2)
⚠	2	Power Cord	See Contrast table (2)
	3	Audio Cable	XDE3045
	4	LAN Cable	DDE1141
	5	Disc Force Eject Pin	DEX1024
	6	Operating Instructions (Quick Start Guide)	See Contrast table (2)
	7	Operating Instructions (Quick Start Guide)	See Contrast table (2)
	8	Operating Instructions (Quick Start Guide)	See Contrast table (2)
	9	Operating Instructions (Quick Start Guide)	See Contrast table (2)
NSP	10	Leaflet	See Contrast table (2)
NSP	11	Polyethylene Bag	AHG7117
	12	Packing Pad	DHA1935
	13	Packing Pad	DHA1936
	14	Packing Case	See Contrast table (2)
	15	Packing Sheet	RHC1023
NSP	16	Warranty	See Contrast table (2)
	17	Caution Card SB	See Contrast table (2)
NSP	18	Label	See Contrast table (2)
NSP	19	Name Label	See Contrast table (2)
NSP	20	CCC S Label	See Contrast table (2)

(2) CONTRAST TABLE

CDJ-2000NXS2/SYXJ, UXJCB, FLXJ and AXJ5 are constructed the same except for the following:

Mark	No.	Symbol and Description	CDJ-2000NXS2 /SYXJ	CDJ-2000NXS2 /UXJCB	CDJ-2000NXS2 /FLXJ	CDJ-2000NXS2 /AXJ5
⚠	1	Power Cord	ADG1244	DDG1108	ADG1244	DDG1114
⚠	2	Power Cord	Not used	Not used	ADG1239	Not used
	6	Operating Instructions (Quick Start Guide) (En, Fr, De, It, Nl, Es, Pt, Ru)	DRH1322	Not used	Not used	Not used
	7	Operating Instructions (Quick Start Guide)(En)	Not used	DRH1321	Not used	Not used
	8	Operating Instructions (Quick Start Guide) (En, Es, Zhtw)	Not used	Not used	DRH1323	Not used
	9	Operating Instructions (Quick Start Guide)(Zhcn)	Not used	Not used	Not used	DRH1324
NSP	10	Leaflet	DRH1275	DRH1275	DRH1275	DRH1274
	14	Packing Case	DHG3438	DHG3440	DHG3441	DHG3443
NSP	16	Warranty	ARY7158	Not used	Not used	Not used
	17	Caution Card SB	Not used	Not used	ARM7064	Not used
NSP	18	Label	Not used	Not used	Not used	DRW2667
NSP	19	Name Label	Not used	Not used	Not used	DAL1335
NSP	20	CCC S Label	Not used	Not used	Not used	DRW2310

9.2 EXTERIOR SECTION

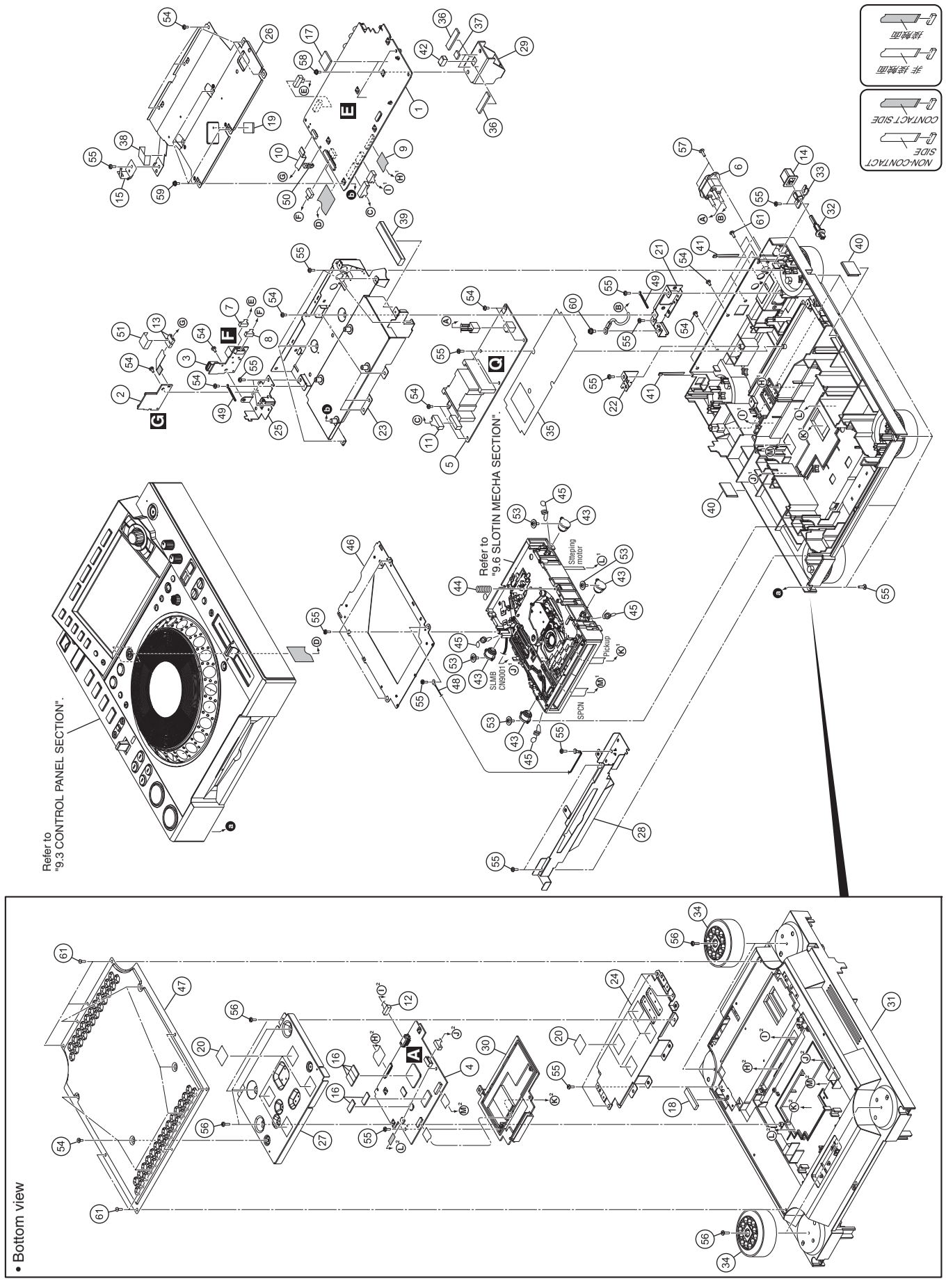

EXTERIOR SECTION PARTS LIST

Mark	No.	Description	Part No.
	1	MAIN Assy	DWX3672
	2	SDCB Assy	DWX3694
	3	USBA Assy	DWX3695
	4	SRVB Assy	DWX3696
⚠	5	SW POWER SUPPLY Assy	DWR1548
⚠	6	AC Inlet	DKP3975
	7	Shielded Conn-Cable	DDA1053
	8	Shielded Conn-Cable	DDA1052
	9	FFC	DDD1703
	10	FFC	DDD1706
	11	Crimp Connector	DDC1024
	12	Connector Assy	PF06PP-S10
	13	Ferrite Core	BTX1037
	14	Power Knob	DAC2306
	15	SD Earth Spring	DBK1357
	16	Silicon Rubber D5 L	DEB1456
	17	Heat Cond Sheet	DEB2018
	18	Heat Cond Sheet	DEB2019
	19	Cushion	DEB2024
	20	Cushion	DEB2030
	21	Bracket/ACI	DNH3020
	22	Stay/KST	DNH3021
	23	Stay	DNH3225
	24	Stay	DNH3226
	25	Stay	DNH3227
	26	Shield Plate	DNH3229
	27	Plate	DNH3230
	28	Plate	DNH3237
	29	Heat Sink	DNH3238
	30	Servo Cover	DNK5492
⚠	31	Chassis	DNK6500
	32	Shaft	DNK6501
	33	Guide	DNK6502
	34	Insulator	DXB2169
	35	Sheet	DEC3660
	36	Heat Cond Sheet	DEB2041
	37	Heat Cond Sheet	DEB2042
	38	Cushion	DEC3679
	39	Gasket	DEC3681
	40	Cushion	DEC3687
	41	Cushion	DEC3688
	42	Gasket/JOG	DEC3562
	43	Damper	CNV7618
	44	Earth Spring	DBH1398
	45	Float Spring (G5)	DBH1494

Mark	No.	Description	Part No.
	46	Mecha Plate	DNH2339
	47	Panel	DAH3052
	48	Cord With Plug	DE007VE0
	49	Cord Clamper (Steel)	RNH-184
	50	Cable Tie	ZCA-SKB90BK
	51	Cushion	DEC3680
	52	•••••	
	53	DM Screw (FTC)	DBA1260
	54	Screw	BBZ30P060FTB
	55	Screw	BPZ30P080FNI
	56	Screw	BPZ30P100FTC
	57	Screw	IBZ30P100FTB
	58	Screw	PMB30P080FTB
	59	Screw	PMH30P080FTC
	60	Screw	PMH40P080FTC
	61	Screw	PPZ30P080FTB

9.3 CONTROL PANEL SECTION

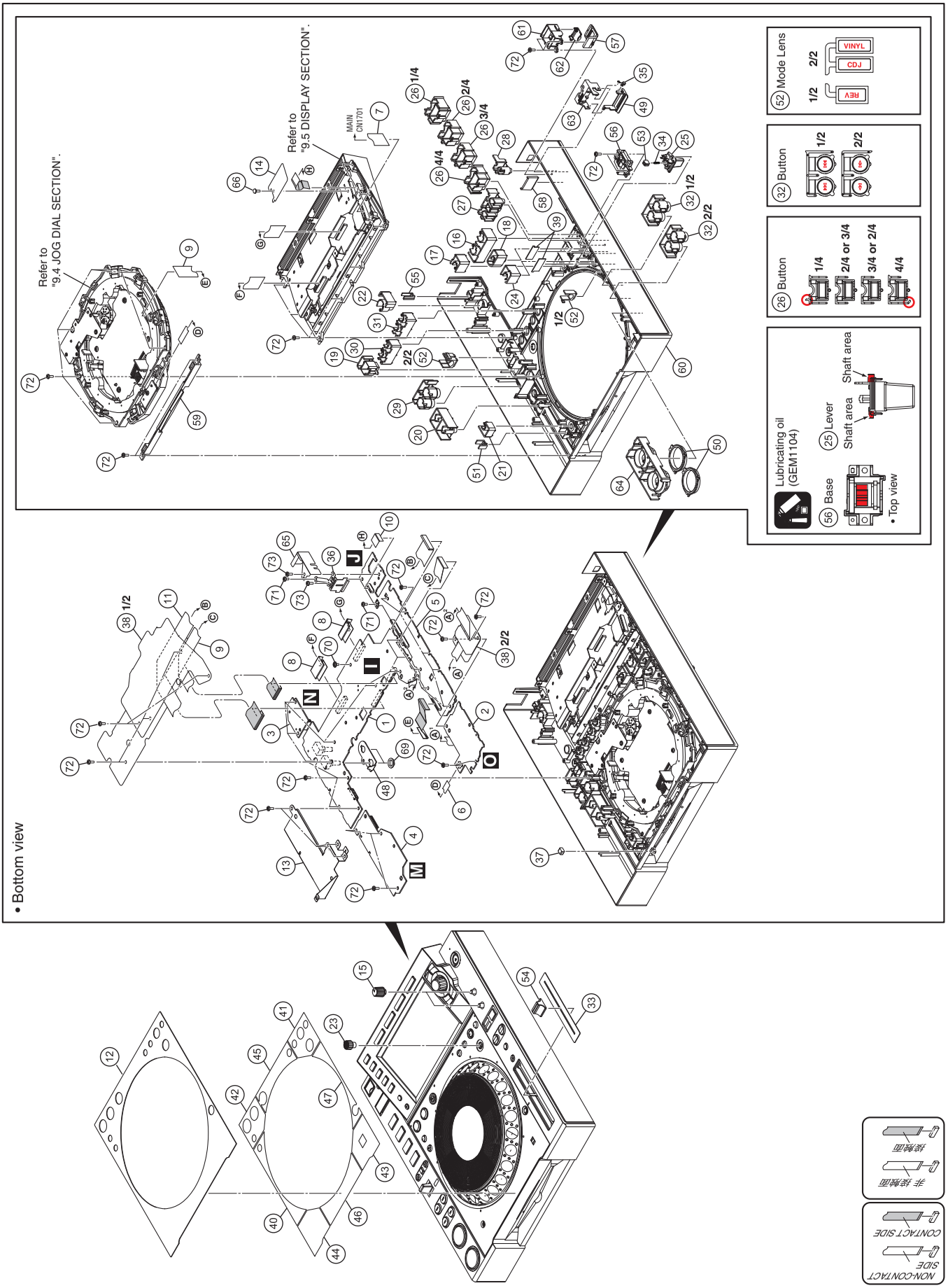

CONTROL PANEL SECTION PARTS LIST

Mark	No.	Description	Part No.
	1	PNLB Assy	DWX3702
	2	KSWB Assy	DWX3703
	3	EUPB Assy	DWX3704
	4	SLDB Assy	DWX3705
	5	HLED Assy	DWX3700
	6	FFC/4P	DDD1641
	7	FFC	DDD1705
	8	FFC	DDD1707
	9	FFC	DDD1709
	10	FFC	DDD1711
	11	FFC	DDD1712
	12	Panel	DAH3051
	13	Plate	DNH3223
	14	Sheet/FFC	DEC3577
	15	Knob	DAA1303
	16	Button (LOOP)	DAC2470
	17	Button (RELOOP)	DAC2471
	18	Button (4-BEAT LOOP)	DAC2472
	19	Button (JOG MODE)	DAC2473
	20	Button (TEMPO)	DAC2474
	21	Button (TEMPO REST)	DAC2475
	22	Button (EJECT)	DAC2476
	23	Adjust Knob Black	DAC2528
	24	Button/SLP	DAC2865
	25	Lever	DAC3097
	26	Button	DAC3129
	27	Button	DAC3130
	28	Button	DAC3134
	29	Button	DAC3135
	30	Button	DAC3147
	31	Button	DAC3148
	32	Button	DAC3149
	33	Slide Sheet 1C	DAH2404
	34	Lever Spring	DBH1702
	35	Spring	DBH1717
	36	Leaf Spring	DBK1386
	37	Gasket/JOG	DEC3562
	38	Sheet	DEC3614
	39	Brake	DEC3634
	40	DS ADH Sheet	DEH1070
	41	DS ADH Sheet	DEH1071
	42	DS ADH Sheet	DEH1072
	43	DS ADH Sheet	DEH1073
	44	DS ADH Sheet	DEH1074
	45	DS ADH Sheet	DEH1075
	46	DS ADH Sheet	DEH1076
	47	DS ADH Sheet	DEH1082
	48	Stay/VR	DNF1894
	49	SD Card Door	DNK5308
	50	Ring Rens (PLAY)	DNK5315
	51	Tempo Lens	DNK5316
	52	Mode Lens	DNK5317
	53	Lever Cap	DNK5344
	54	Knob/SLD	DNK5981
	55	Lens/EUP	DNK6040
	56	Base	DNK6470
	57	Lens	DNK6491
	58	Lens	DNK6492
	59	Lens	DNK6493
⚠	60	Control Panel	DNK6494
	61	Holder	DNK6496
	62	Door	DNK6497
	63	Holder	DNK6498
	64	Button	DXB2170
	65	Sheet	DEC3689
	66	Rivet (Plastic)	RBM-003
	67	•••••	
	68	•••••	
	69	Flange Nut M9	DBN1008
	70	Screw	ABZ30P060FTC
	71	Screw	BBZ30P060FTB
	72	Screw	BPZ30P080FNI
	73	Screw	BPZ30P100FTC

9.4 JOG DIAL SECTION

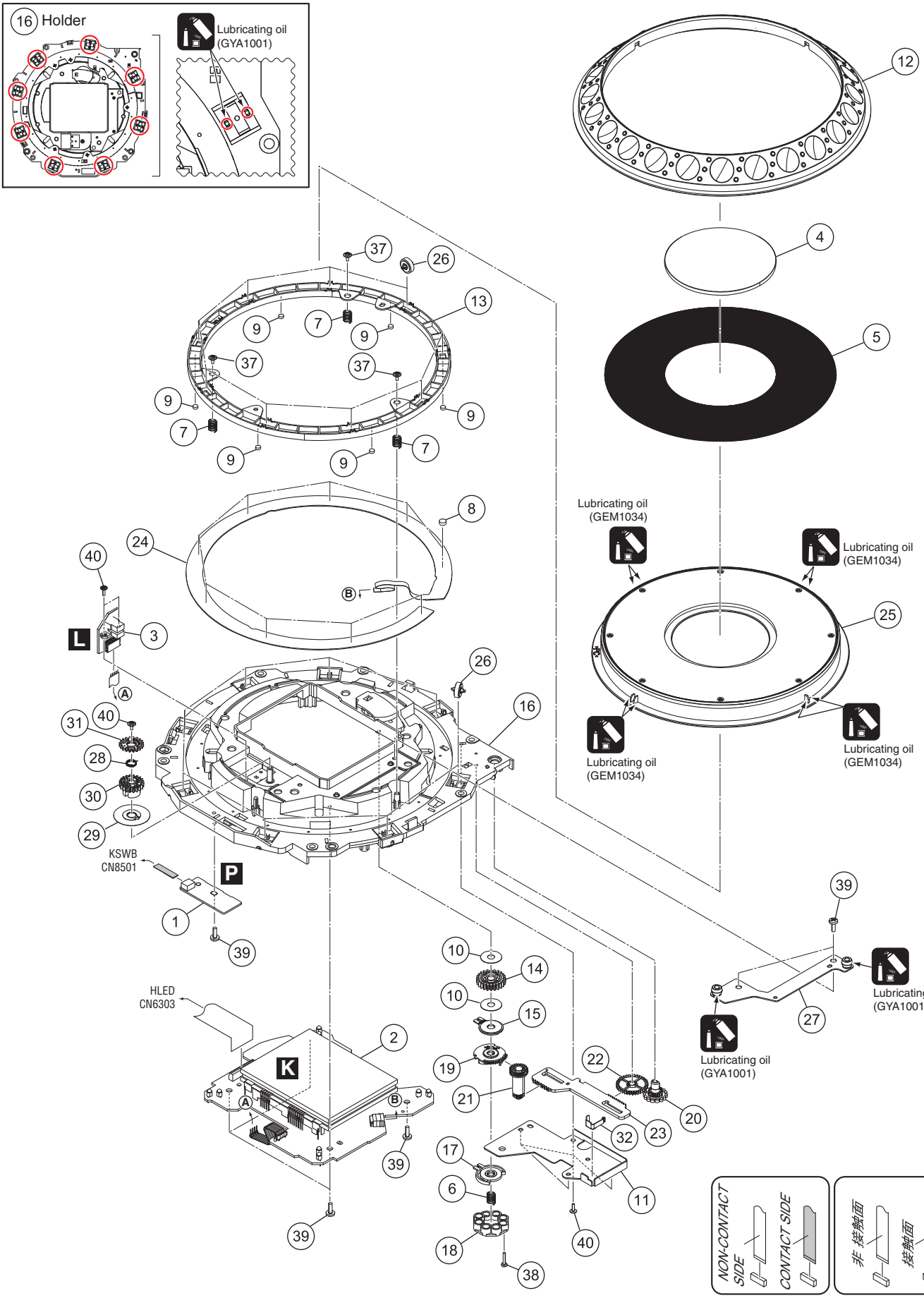

JOG DIAL SECTION PARTS LIST

Mark	No.	Description	Part No.
	1	INDB Assy	DWX3699
	2	JFLB Assy	DWX3708
	3	JOGB Assy	DWX3709
	4	Jog Panel	DAH2609
	5	Jog Plate	DAH2679
	6	Coil Spring/LD	DBH1798
	7	SW Spring	DBH1681
	8	SW Cushion HH48/2	DEC2538
	9	Cushion/RNG	DEC3466
	10	Washer	DEC3137
	11	Link Plate	DNH2848
	12	Jog B	DNK4068
	13	SW Ring	DNK5233
	14	Gear/LD	DNK6145
	15	Smoother	DNK5237
	16	Holder	DNK6556
	17	Comp Plate	DNK5243
	18	Adjust Plate	DNK5300
	19	Cam Plate	DNK5301
	20	Dial Gear	DNK5302
	21	Link Gear A	DNK5303
	22	Link Gear B	DNK5304
	23	Rack Plate	DNK5305
	24	Sheet SW	DSX1078
	25	Jog Dial A Assy	DXA2159
	26	Roller	DXB2178
	27	Stay Assy/JOG	DXB2133
	28	Encoder Spring	DBH1710
	29	Plate	DEC3700
	30	Gear/A	DNK6143
	31	Gear/B	DNK6144
	32	Leaf Spring/ADJ	DBK1376
	33	•••••	
	34	•••••	
	35	•••••	
	36	•••••	
	37	Screw (FE)	DBA1265
	38	Screw	BPZ20P100FTC
	39	Screw	BPZ30P080FNI
	40	Screw	IPZ20P060FTC

9.5 DISPLAY SECTION

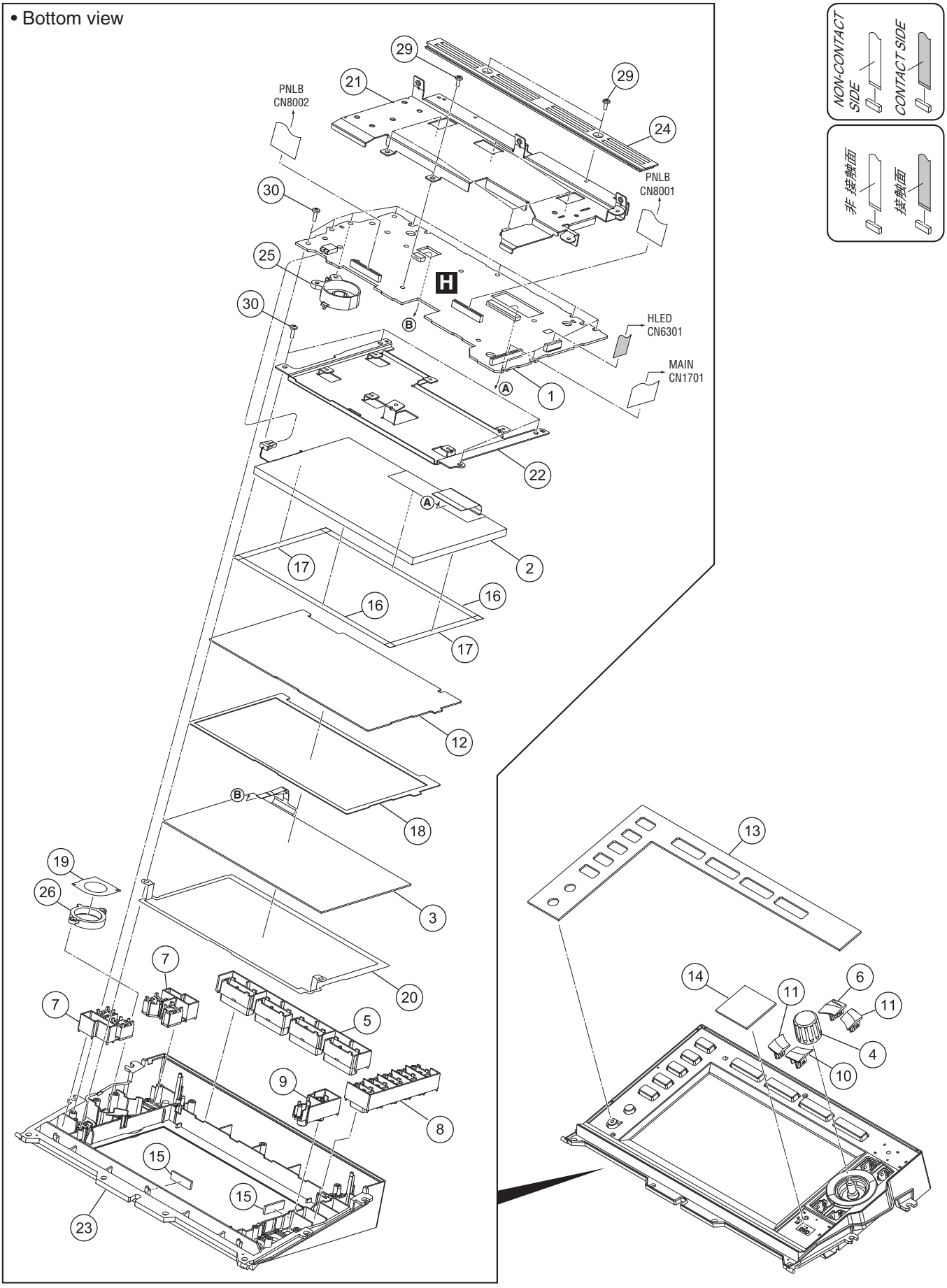

DISPLAY SECTION PARTS LIST

Mark	No.	Description	Part No.
	1	LCDB Assy	DWX3693
	2	TFT LCD	CWX4352
	3	Touch Panel	DSX1130
	4	Dial Knob	DAA1246
	5	Button/MOD	DAC2807
	6	Button	DAC3113
	7	Button	DAC3114
	8	Button	DAC3115
	9	Button	DAC3116
	10	Button	DAC3117
	11	Button	DAC3118
	12	Panel/TCP	DAH3006
	13	Panel	DAH3043
	14	Panel	DAH3044
	15	Packing/LCD	DEC3565
	16	Packing/L	DEC3568
	17	Packing/S	DEC3569
	18	Spacer/LCD	DEC3571
	19	Light-D Sheet	DEC3613
	20	Plate/GND	DNH3173
	21	Shield Case	DNH3220
	22	Stay	DNH3221
⚠	23	Control Panel	DNK6465
	24	Cover	DNK6466
	25	Holder	DNK6467
	26	Lens	DNK6468
	27	•••••	
	28	•••••	
	29	Screw	BBZ26P060FTB
	30	Screw	BPZ26P080FTC

9.6 SLOT IN MECHA SECTION

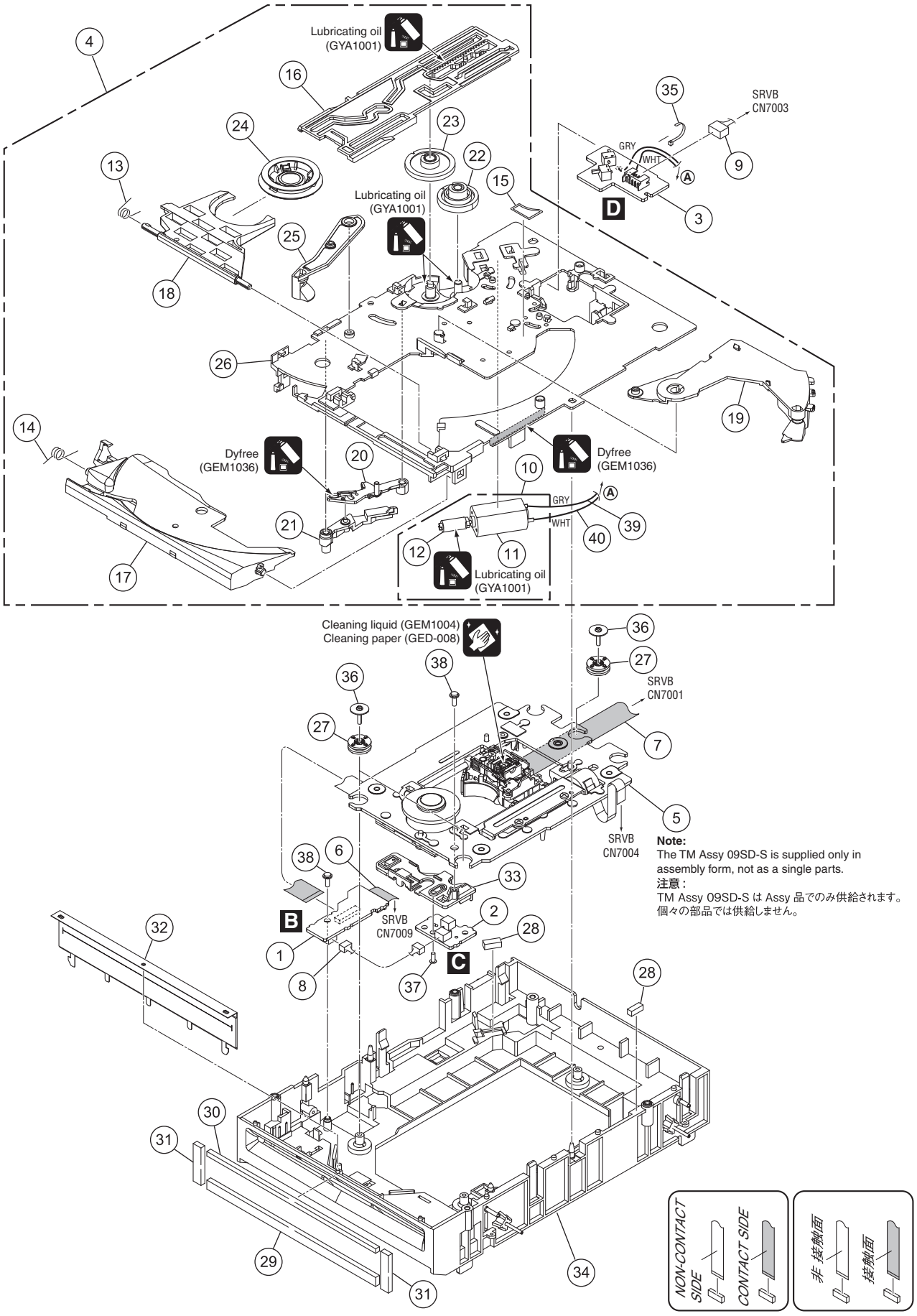

Note:
The TM Assy 09SD-S is supplied only in assembly form, not as a single parts.
注意 :
TM Assy 09SD-S は Assy 品でのみ供給されます。
個々の部品では供給しません。

SLOT IN MECHA SECTION PARTS LIST

Mark	No.	Description	Part No.
	1	SPCN Assy	DWX3698
	2	INSW Assy	DWX3697
	3	SLMB Assy	DWX3707
NSP	4	SLOTIN MECHA G11 Assy	DXA2163
	5	TM Assy 09SD-S	DXX2697
	6	FFC	DDD1704
	7	FFC	DDD1713
	8	Connector Assy 2P	DKP3769
	9	Connector Assy	PF05PP-C25
	10	DC Motor Assy-S	DXX2510
NSP	11	DC Motor S	DXM1230
NSP	12	Worm Gear	DNK3910
	13	Clamp Spring	DBH1374
	14	Guide Spring	DBH1375
	15	SW. Lever Spacer (PET)	DEC2420
	16	Main Cam	DNK3407
	17	Disc Guide	DNK3478
	18	Clamp Arm	DNK3576
	19	Eject Lever	DNK3684
	20	Lever AP	DNK3835
	21	Lever BP	DNK3836
	22	Loading Gear	DNK3911
	23	Drive Gear	DNK3912
	24	Clamper Assy	DXA2043
	25	Loading Lever Assy	DXB1880
	26	Loading Base Assy-S	DEA1022
	27	Float Rubber D3	DEB1404
	28	Spacer POR (T3)	DEB1566
	29	Vessel Cushion A	DEC2852
	30	Vessel Cushion B	DEC2853
	31	Vessel Cushion C	DEC2854
	32	Front Sheet	DED1132
	33	Inside SW Base	DNK4236
	34	Float Base G11 Assy	DXB1793
	35	Binder	ZCA-SKB90BK
	36	Float Fastener	DBA1286
	37	Screw	VBA1062
	38	Screw	IPZ20P060FTC
NSP	39	Lead Wire (JP1901)	ZWNN1007G28-8-07A
NSP	40	Lead Wire (JP1902)	ZWNN1007G28-9-07A