9. EXPLODED VIEWS AND PARTS LIST

NOTES:
- *Parts marked by "NSP" are generally unavailable because they are not in our Master Spare Parts List.*
- *The ⚠ mark found on some component parts indicates the importance of the safety factor of the part. Therefore, when replacing, be sure to use parts of identical designation.*
- *Screws adjacent to ▼ mark on product are used for disassembly.*
- *For the applying amount of lubricants or glue, follow the instructions in this manual. (In the case of no amount instructions, apply as you think it appropriate.)*

9.1 PACKING SECTION

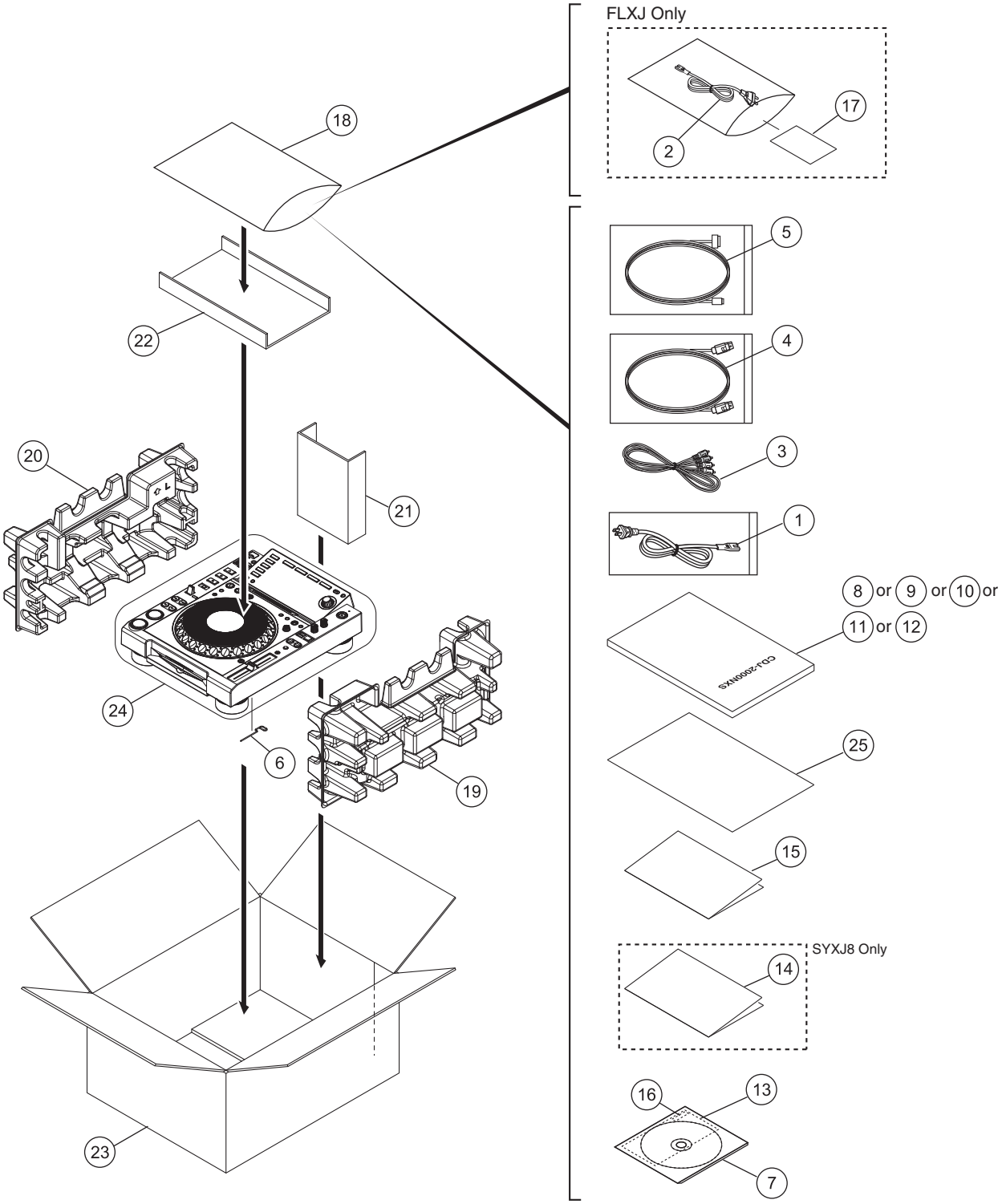

(1) PACKING SECTION PARTS LIST

Mark	No.	Description	Part No.
⚠	1	Power Cable	See Contrast table (2)
⚠	2	Power Cable	See Contrast table (2)
	3	Audio Cable (L = 1.5 m)	XDE3045
	4	LAN Cable	DDE1141
	5	Cable/iPod	DDE1142
	6	Disc Force Eject Pin	DEX1024
	7	CD-ROM Assy/2KN	DXX2693
	8	Sub Manual	See Contrast table (2)
	9	Sub Manual	See Contrast table (2)
	10	Sub Manual	See Contrast table (2)
	11	Sub Manual	See Contrast table (2)
	12	Sub Manual	See Contrast table (2)
NSP	13	License Key Label Assy	DXA2190
NSP	14	Warranty	See Contrast table (2)
NSP	15	Leaflet	See Contrast table (2)
NSP	16	Label/L K	DRW2484
	17	Caution Card SB	See Contrast table (2)
NSP	18	Polyethylene Bag	AHG7117
	19	Pad (R)	DHA1788
	20	Pad (L)	DHA1789
	21	Spacer	DHA1802
	22	Spacer	DHA1892
	23	Packing Case	See Contrast table (2)
	24	Packing Sheet	RHC1023
	25	Sub Manual/SNC	DRH1199

(2) CONTRAST TABLE

CDJ-2000NXS/UXJCB, SYXJ8, FLXJ, AXJ5 and KXJ5 are constructed the same except for the following:

Mark	No.	Symbol and Description	CDJ-2000NXS /UXJCB	CDJ-2000NXS /SYXJ8	CDJ-2000NXS /FLXJ	CDJ-2000NXS /AXJ5	CDJ-2000NXS /KXJ5
⚠	1	Power Cable	DDG1108	XDG3061	ADG7076	ADG7105	ADG7115
⚠	2	Power Cable	Not used	Not used	XDG3061	Not used	Not used
	8	Sub Manual (En)	DRH1158	Not used	Not used	Not used	Not used
	9	Sub Manual (En, Fr, De, It, Nl, Es, Pt, Ru)	Not used	DRH1159	Not used	Not used	Not used
	10	Sub Manual (En, Es, Zhtw)	Not used	Not used	DRH1160	Not used	Not used
	11	Sub Manual (ZHcn, En)	Not used	Not used	Not used	DRH1161	Not used
	12	Sub Manual (Ko)	Not used	Not used	Not used	Not used	DRH1162
NSP	14	Warranty	Not used	ARY7158	Not used	Not used	Not used
NSP	15	Leaflet	DRH1189	DRH1189	DRH1189	DRH1188	DRH1188
	17	Caution Card SB	Not used	Not used	ARM7064	Not used	Not used
	23	Packing Case	DHG3154	DHG3153	DHG3155	DHG3157	DHG3158

9.2 EXTERIOR SECTION

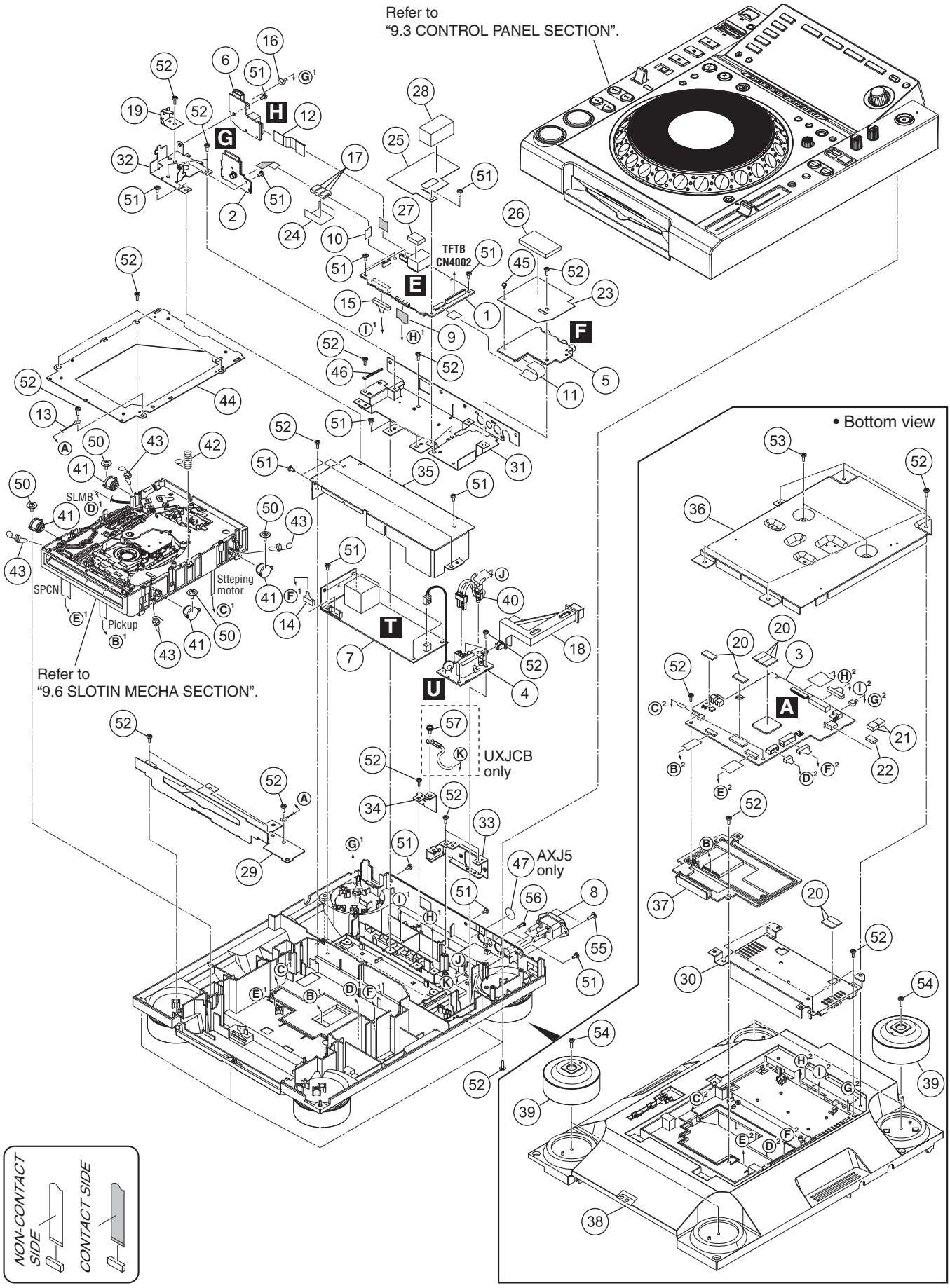

(1) EXTERIOR SECTION PARTS LIST

Mark	No.	Description	Part No.
	1	MAIN Assy	DWX3312
	2	SDCB Assy	DWX3333
	3	SRVB Assy	DWX3334
	4	ACIN Assy	DWX3346
	5	JACB Assy	DWX3350
	6	USBB Assy	DWX3395
⚠	7	POWER SUPPLY Assy	DWR1463
⚠	8	AC Inlet	See Contrast table (2)
	9	40P FFC	DDD1479
	10	10P FFC	DDD1480
	11	13P FFC	DDD1484
	12	FFC/13P	DDD1606
	13	Cord With Plug	DE007VE0
	14	Connector Assy	DKP3844
	15	Connector Assy 12P	DKP3845
	16	Crimp Connector/3P	DKP3939
	17	Ferrite Core	BTX1037
	18	Power Knob	DAC2484
	19	SD Earth Spring	DBK1357
NSP	20	Silicon Rubber D5 L	DEB1456
	21	Heat Cond Sheet	DEB2000
	22	Heat Cond Sheet	DEB2001
	23	Jack Cover	DEC3205
	24	Cushion (FC)	DEC3249
	25	Main Cover	DEC3258
	26	Cushion/FFC	DEC3430
	27	Cushion/LAN	DEC3431
	28	Cushion/PCB	DEC3455
	29	Front Plate	DNH2857
	30	SWPS Stay	DNH2890
	31	Stay/PCB	DNH3011
	32	Stay/USB	DNH3015
	33	Bracket/ACI	DNH3020
	34	Stay/KST	DNH3021
	35	Shield Case	DNH3022
	36	Plate	See Contrast table (2)
	37	Servo Cover	DNK5492
⚠	38	Chassis	See Contrast table (2)
	39	Insulator Assy	DXB2057
	40	Holder	VEC1355
	41	Damper	CNV7618
	42	Earth Spring	DBH1398
	43	Float Spring (G5)	DBH1494
	44	Mecha Plate	DNH2339
	45	Rivet (Plastic)	RBM-003
	46	Cord Clamper (Steel)	RNH-184
NSP	47	CCC S Label	See Contrast table (2)
	48	• • • • •	
	49	• • • • •	
	50	DM Screw (FTC)	DBA1260
	51	Screw	BBZ30P060FTB
	52	Screw	BPZ30P080FNI
	53	Screw	BPZ30P100FTB
	54	Screw	BPZ30P100FTC
	55	Screw	IBZ30P100FTB
	56	Screw	PPZ30P080FTB
	57	Screw	See Contrast table (2)

(2) CONTRAST TABLE

CDJ-2000NXS/UXJCB, SYXJ8, FLXJ, AXJ5 and KXJ5 are constructed the same except for the following:

Mark	No.	Symbol and Description	CDJ-2000NXS /UXJCB	CDJ-2000NXS /SYXJ8	CDJ-2000NXS /FLXJ	CDJ-2000NXS /AXJ5	CDJ-2000NXS /KXJ5
⚠	8	AC Inlet/3P	DKP3934	Not used	Not used	Not used	Not used
⚠	8	AC Inlet/2P	Not used	DKP3935	DKP3935	DKP3935	DKP3935
	36	Plate	DNH3026	DNH3019	DNH3026	DNH3019	DNH3019
⚠	38	Chassis	DNK6077	DNK6039	DNK6078	DNK6080	DNK6081
NSP	47	CCC S Label	Not used	Not used	Not used	DRW2310	Not used
	57	Screw	PMH40P080FTC	Not used	Not used	Not used	Not used

9.3 CONTROL PANEL SECTION

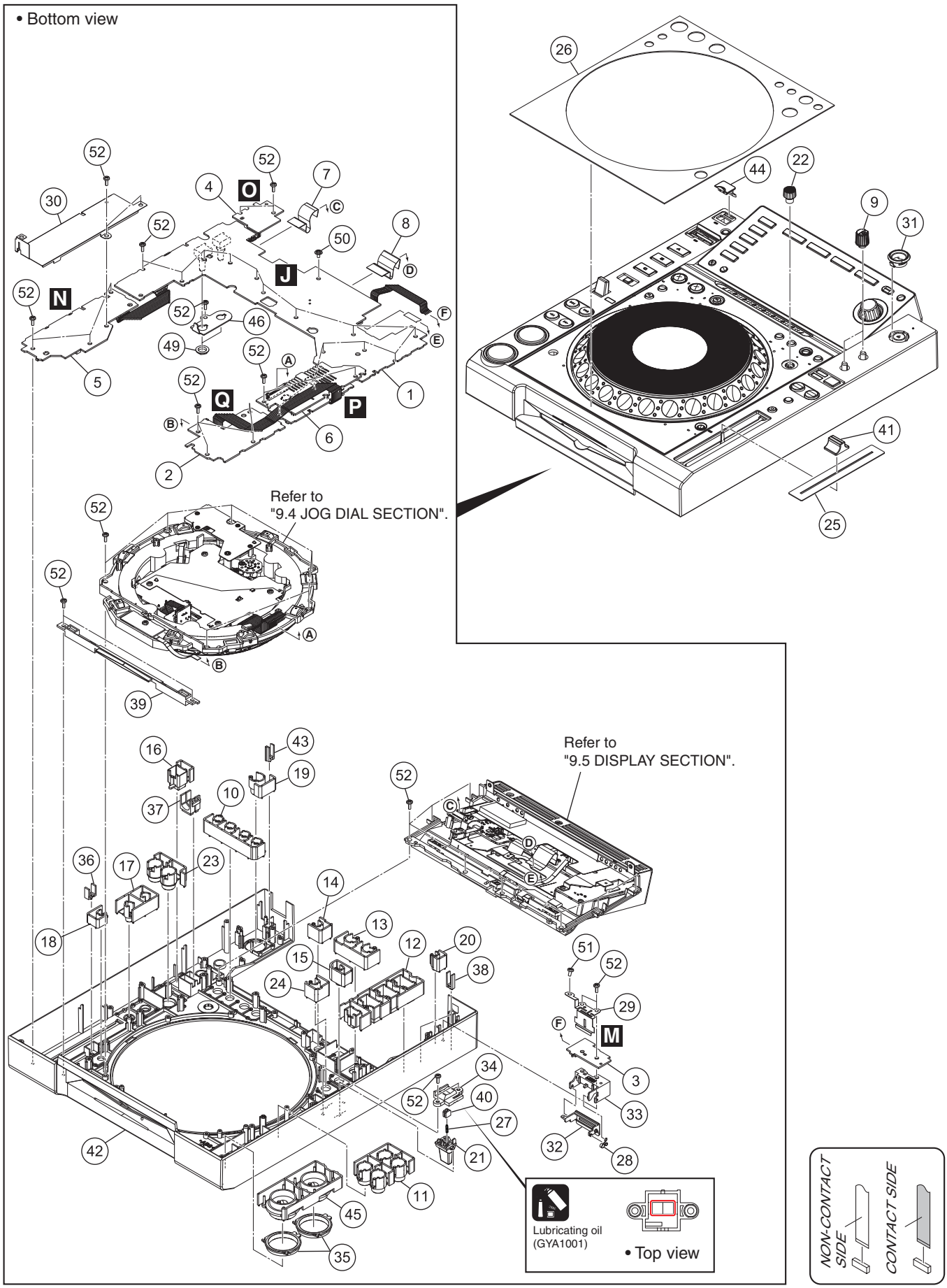

CONTROL PANEL SECTION PARTS LIST

Mark	No.	Description	Part No.
	1	PNLB Assy	DWX3338
	2	KSWB Assy	DWX3339
	3	SDSW Assy	DWX3340
	4	EUPB Assy	DWX3341
	5	SLDB Assy	DWX3342
NSP	6	CNCT Assy	DWX3343
	7	16P FFC	DDD1483
	8	FFC/22P	DDD1609
	9	Knob	DAA1303
	10	Button (CALL)	DAC2466
	11	Button (SERCH)	DAC2468
	12	Button (HOT CUE)	DAC2469
	13	Button (LOOP)	DAC2470
	14	Button (RELOOP)	DAC2471
	15	Button (4-BEAT LOOP)	DAC2472
	16	Button (JOG MODE)	DAC2473
	17	Button (TEMPO)	DAC2474
	18	Button (TEMPO REST)	DAC2475
	19	Button (EJECT)	DAC2476
	20	Button (USB STOP)	DAC2477
	21	Lever	DAC2478
	22	Adjust Knob Black	DAC2528
	23	Button/BSY	DAC2810
	24	Button/SLP	DAC2865
	25	Slide Sheet 1C	DAH2404
	26	Panel/TOP	DAH2871
	27	Lever Spring	DBH1702
	28	Spring	DBH1717
	29	Leaf Spring/SD	DBK1375
	30	Earth Plate	DNH2849
	31	Eject Guard	DNK3958
	32	SD Card Door	DNK5308
	33	SD Door Holder	DNK5309
	34	Lever Plate	DNK5312
	35	Ring Rens (PLAY)	DNK5315
	36	Tempo Lens	DNK5316
	37	Mode Lens	DNK5317
	38	Device Lens	DNK5318
	39	Front Lens	DNK5328
	40	Lever Cap	DNK5344
	41	Knob/SLD	DNK5981
⚠	42	Control Panel	DNK6030
	43	Lens/EUP	DNK6040
	44	Cover/USB	DNK6041
	45	Button Assy/PLY	DXB2126
	46	Stay/VR	DNF1894
	47	•••••	
	48	•••••	
	49	Flange Nut M9	DBN1008
	50	Screw	ABZ30P060FTC
	51	Screw	BBZ30P060FTB
	52	Screw	BPZ30P080FNI

9.4 JOG DIAL SECTION

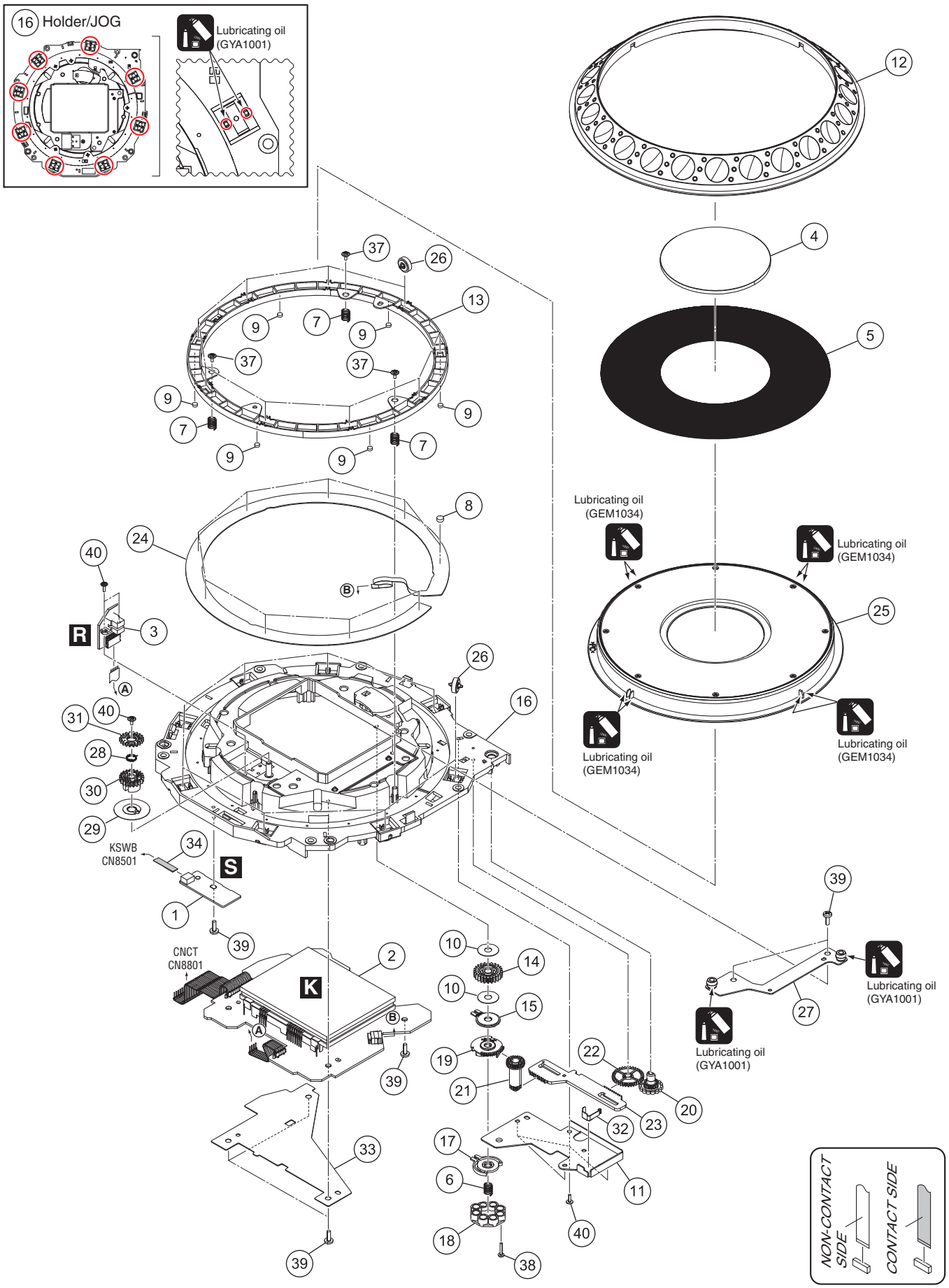

JOG DIAL SECTION PARTS LIST

Mark	No.	Description	Part No.
	1	INDB Assy	DWX3337
	2	JFLB Assy	DWX3348
	3	JOGB Assy	DWX3349
	4	JOG Panel	DAH2609
	5	Plate/JOG	DAH2907
	6	Coil Spring/LD	DBH1798
	7	SW Spring	DBH1681
	8	SW Cushion HH48/2	DEC2538
	9	Cushion/RNG	DEC3466
	10	Washer	DEC3137
	11	Link Plate	DNH2848
	12	JOG Dial/B	DNK6064
	13	SW Ring	DNK5233
	14	Gear/LD	DNK6145
	15	Smoother	DNK5237
	16	Holder/JOG	DNK6138
	17	Comp Plate	DNK5243
	18	Adjust Plate	DNK5300
	19	Cam Plate	DNK5301
	20	Dial Gear	DNK5302
	21	Link Gear A	DNK5303
	22	Link Gear B	DNK5304
	23	Rack Plate	DNK5305
	24	Sheet SW	DSX1078
	25	JOG Dial A Assy	DXA2159
	26	Roller Assy/A	DXB2118
	27	Stay Assy/JOG	DXB2133
	28	Encoder Spring	DBH1710
	29	Encorder Plate	DEC2889
	30	Gear/A	DNK6143
	31	Gear/B	DNK6144
	32	Leaf Spring/ADJ	DBK1376
	33	Barrier/JFL	DEC3419
	34	FFC/4P	DDD1608
	35	•••••	
	36	•••••	
	37	Screw (FE)	DBA1265
	38	Screw	BPZ20P100FTC
	39	Screw	BPZ30P080FNI
	40	Screw	IPZ20P060FTC

9.5 DISPLAY SECTION

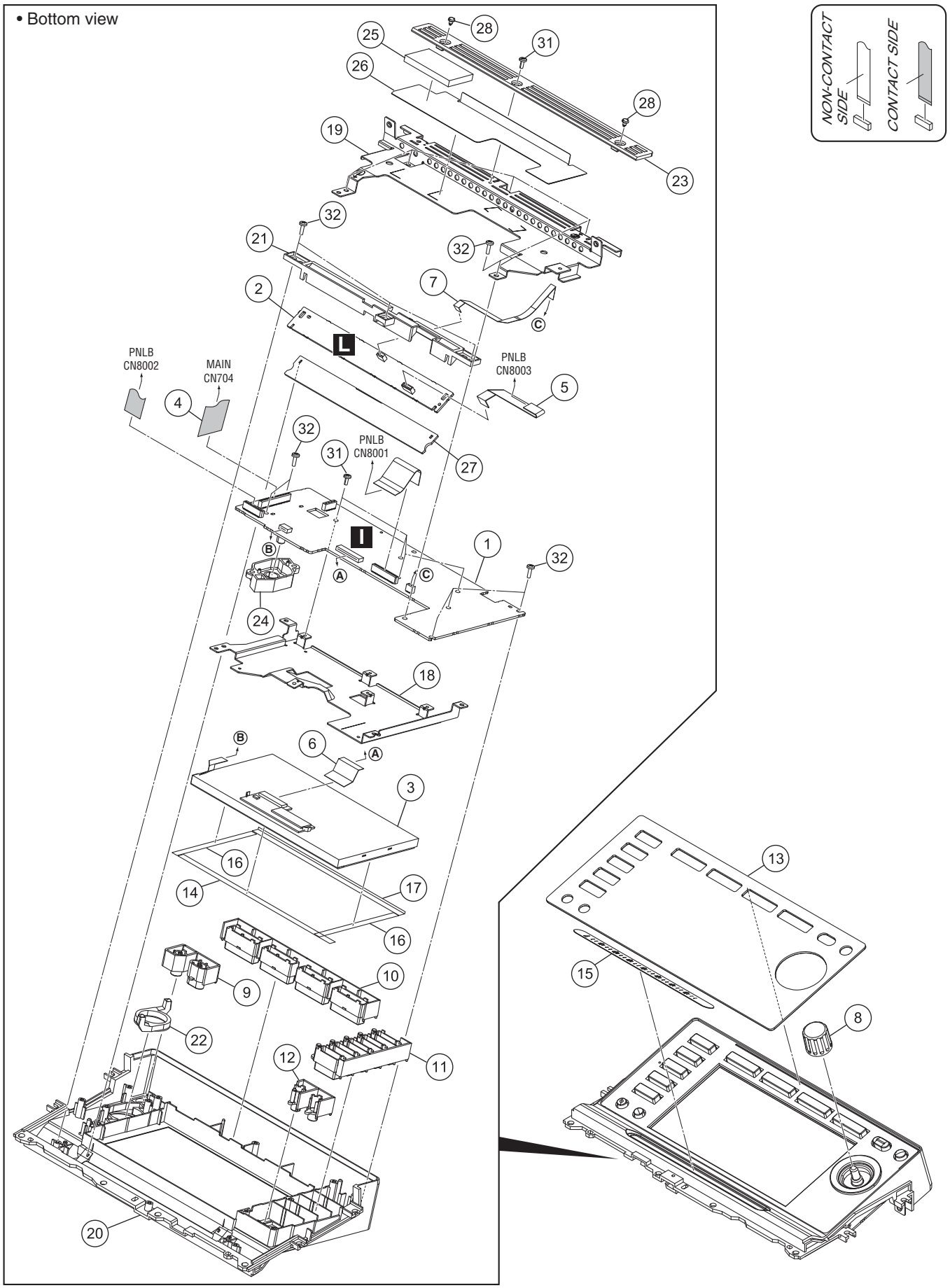

DISPLAY SECTION PARTS LIST

Mark	No.	Description	Part No.
	1	TFTB Assy	DWX3331
	2	CDCB Assy	DWX3332
	3	LCD Module	CWX3970
	4	29P FFC	DDD1481
	5	7P FFC	DDD1485
	6	40P FFC	DDD1541
	7	FFC/4P	DDD1607
	8	Dial Knob	DAA1246
	9	Button (MENU)	DAC2480
	10	Button/MOD	DAC2807
	11	Button/DEV	DAC2808
	12	Button/QUA	DAC2809
	13	Panel/DIS	DAH2874
	14	LCD Packing (Bottom)	DEC3184
	15	Sheet/CDC	DEC3395
	16	LCD Packing (Side)	DEC3192
	17	Packing/TOP	DEC3376
	18	Stay/LCD	DND1269
	19	Bracket/LCD	DND1270
⚠	20	Control Panel/LCD	DNK6037
	21	CDC Stay	DNK5320
	22	Ring Lens (BROWSE)	DNK5322
	23	LCD Bottom Plate	DNK5323
	24	Reflector	DNK5405
	25	Cushion/FFC	DEC3430
	26	Barrier/RB	DEC3421
	27	Lens/CDC	DNK6017
	28	Rivet (Plastic)	RBM-003
	29	•••••	
	30	•••••	
	31	Screw	BBZ26P060FTB
	32	Screw	BPZ26P080FTC

9.6 SLOT IN MECHA SECTION

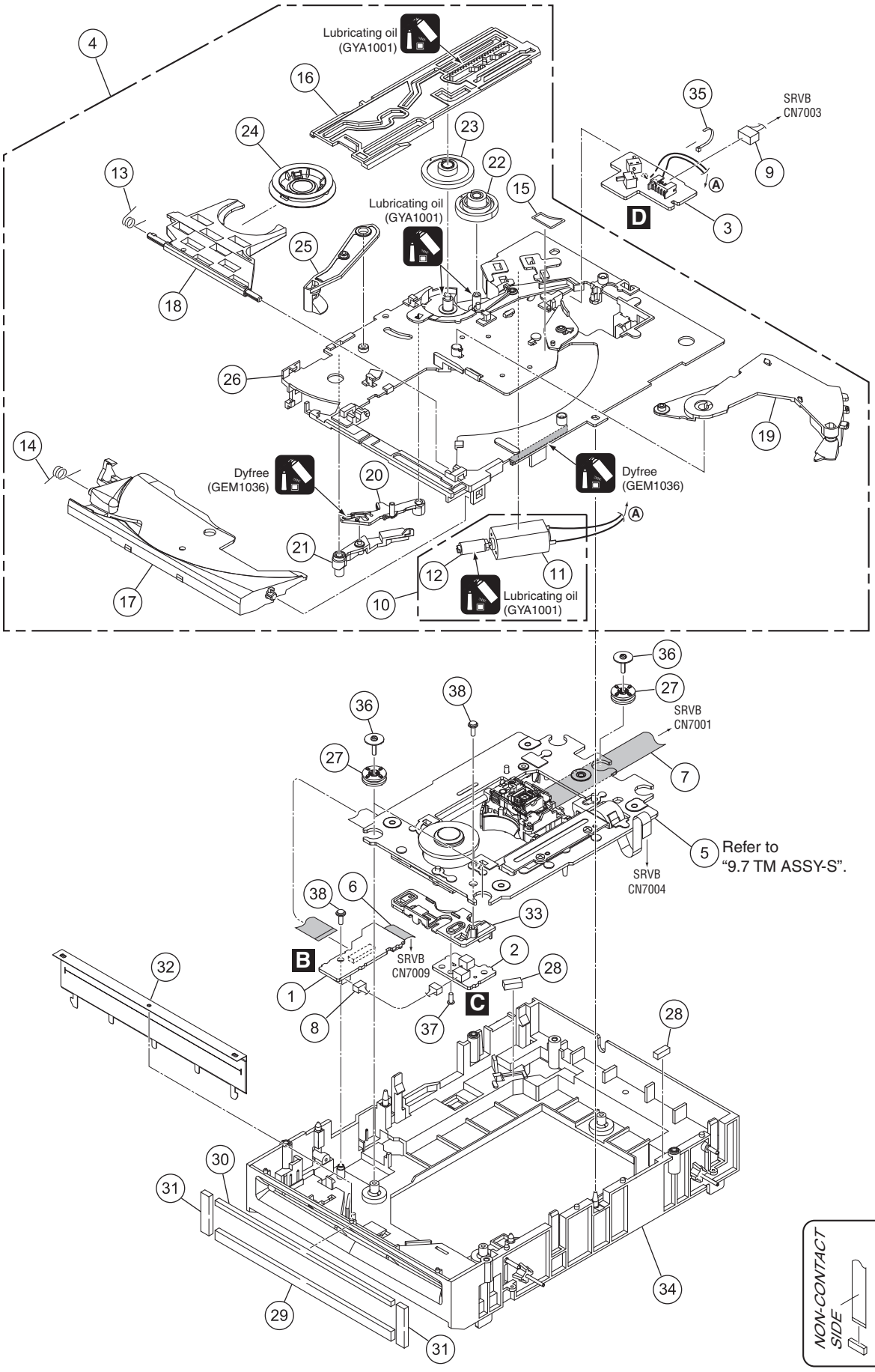

SLOT IN MECHA SECTION PARTS LIST

Mark	No.	Description	Part No.
	1	SPCN Assy	DWX3336
	2	INSW Assy	DWX3335
	3	SLMB Assy	DWX3345
NSP	4	SLOTIN MECHA G11 Assy	DXA2163
	5	TM Assy 09SD -S	DXX2697
	6	13P FFC	DDD1452
	7	24P FFC	DDD1460
	8	Connector Assy 2P	DKP3769
	9	Connector Assy	PF05PP-C25
	10	DC Motor Assy-S	DXX2510
NSP	11	DC Motor S	DXM1230
NSP	12	Worm Gear	DNK3910
	13	Clamp Spring	DBH1374
	14	Guide Spring	DBH1375
	15	SW. Lever Spacer (PET)	DEC2420
	16	Main Cam	DNK3407
	17	Disc Guide	DNK3478
	18	Clamp Arm	DNK3576
	19	Eject Lever	DNK3684
	20	Lever AP	DNK3835
	21	Lever BP	DNK3836
	22	Loading Gear	DNK3911
	23	Drive Gear	DNK3912
	24	Clamper Assy	DXA2043
	25	Loading Lever Assy	DXB1880
	26	Loading Base Assy-S	DEA1022
	27	Float Rubber D3	DEB1404
	28	Spacer POR (T3)	DEB1566
	29	Vessel Cushion A	DEC2852
	30	Vessel Cushion B	DEC2853
	31	Vessel Cushion C	DEC2854
	32	Front Sheet	DED1132
	33	Inside SW Base	DNK4236
	34	Float Base G11 Assy	DXB1793
	35	Binder	ZCA-SKB90BK
	36	Float Fastener	DBA1286
	37	Screw	VBA1062
	38	Screw	IPZ20P060FTC

9.7 TM ASSY-S

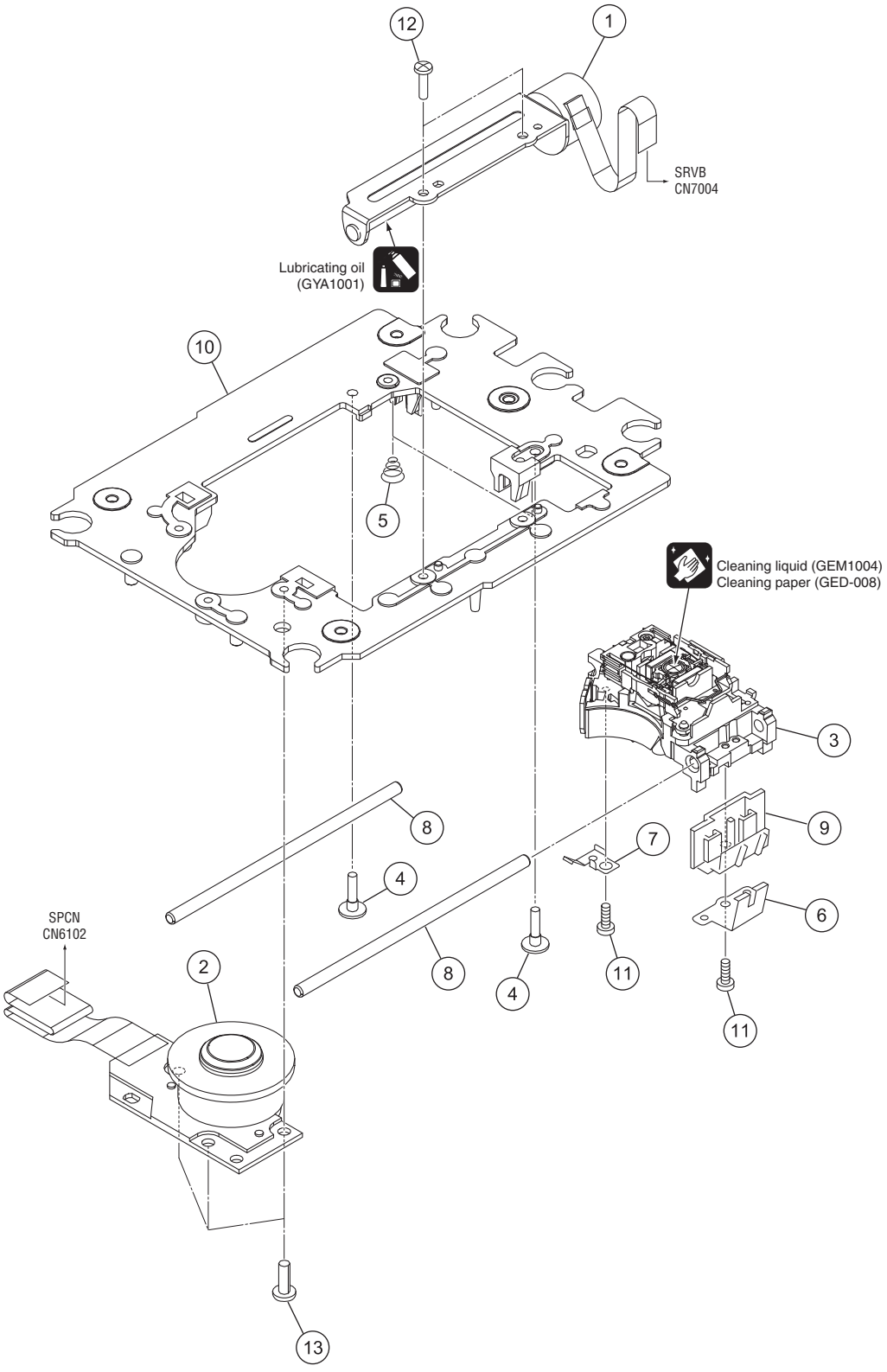
12
1
SRVB
CN7004
Lubricating oil
(GYA1001)
10
5
Cleaning liquid (GEM1004)
Cleaning paper (GED-008)
3
8
9
7
4
6
SPCN
CN6102
2
8
4
11
11
13

TM ASSY-S SECTION PARTS LIST

Mark	No.	Description	Part No.
NSP	1	Stepping Motor SK	DXM1227
NSP	2	Spindle Motor G11(N)	DXM1231
NSP	3	09SD Pickup Assy	OWY8177
NSP	4	Adjust Screw	DBA1263
NSP	5	Skew Spring	DBH1437
NSP	6	Joint Spring (J)	DBK1261
NSP	7	Slider Spring G11 (J)	DBK1262
NSP	8	Guide Shaft (S)	DLA1918
	9	Joint	DNK3858
NSP	10	Mounting Plate G11(J)	DNK4307
	11	Tapping Screw 04	VBA1092
	12	Screw	BPZ20P080FTC
	13	Screw	BPZ26P080FTC