2. EXPLODED VIEWS AND PARTS LIST

NOTES:
- *Parts marked by "NSP" are generally unavailable because they are not in our Master Spare Parts List.*
- *The ⚠ mark found on some component parts indicates the importance of the safety factor of the part. Therefore, when replacing, be sure to use parts of identical designation.*
- *Screws adjacent to ▼ mark on product are used for disassembly.*
- *For the applying amount of lubricants or glue, follow the instructions in this manual. (In the case of no amount instructions, apply as you think it appropriate.)*

2.1 PACKING SECTION

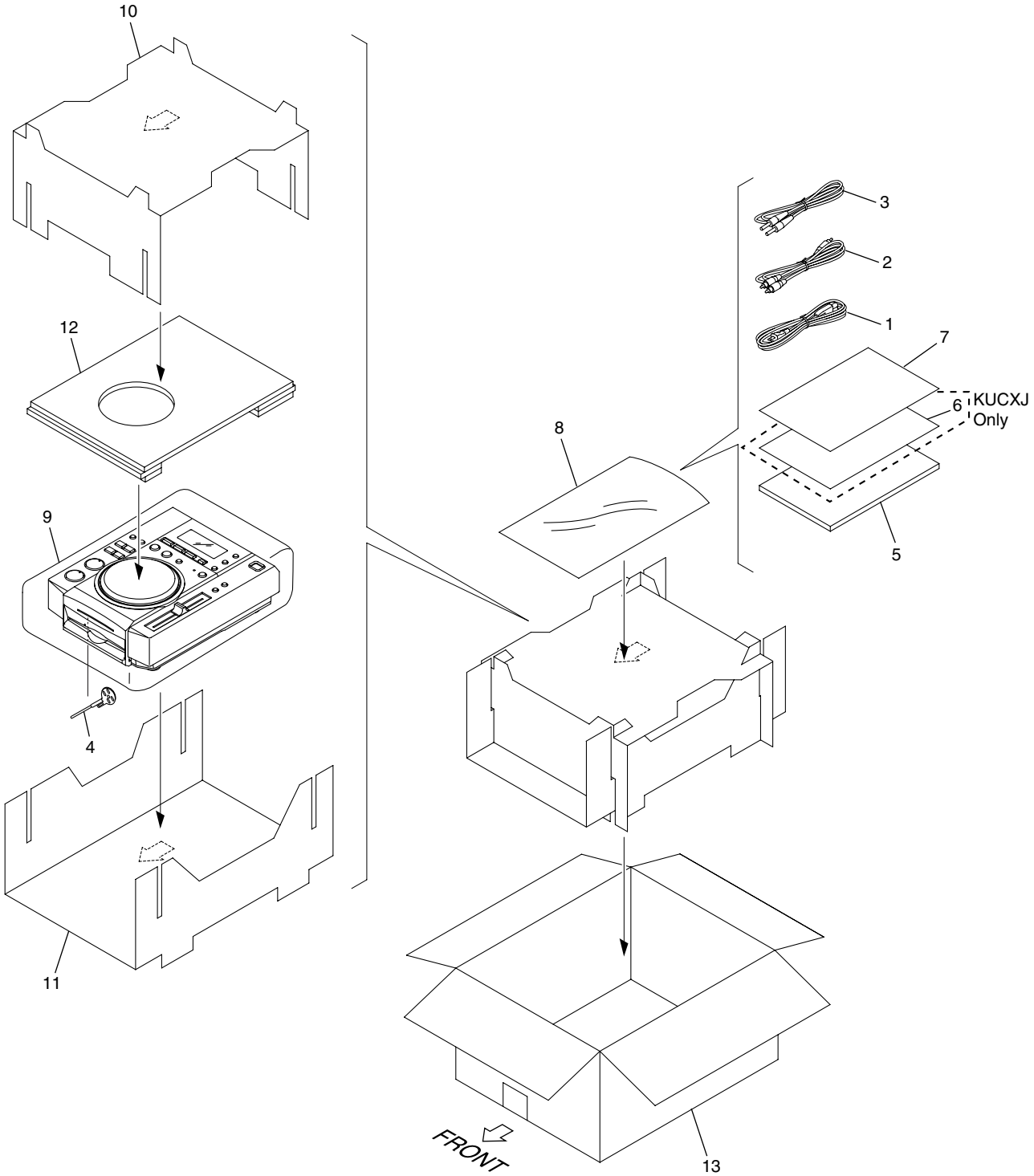

(1) PACKING SECTION PARTS LIST

Mark	No.	Description	Part No.
⚠	1	Power Cord	See Contrast table (2)
	2	Audio Cable	VDE1064 or XDE3045
	3	Control Cable	ADE7108 or XDE3063
	4	Forced Eject Pin	DEX1008
	5	Operating Instructions	See Contrast table (2)
NSP	6	Limited Warranty	See Contrast table (2)
NSP	7	User Seat	DRM1262
NSP	8	Polyethylene Bag (0.06 x 230 x 340)	AHG7117
	9	Packing Sheet	AHG7015
	10	Pad A	DHA1638
	11	Pad B	DHA1639
	12	Pad C	DHA1640
	13	Packing Case	See Contrast table (2)

(2) CONTRAST TABLE

CDJ-200/KUCXJ, RLTXJ, WYXJ and RFXJ are constructed the same except for the following:

Mark	No.	Symbol and Description	CDJ-200/ KUCXJ	CDJ-200/ RLTXJ	CDJ-200/ WYXJ	CDJ-200/ RFXJ
⚠	1	Power Cord	ADG7021	ADG1154	ADG1154	ADG7097
	5	Operating Instructions	DRB1377	DRB1378	DRB1376	DRB1378
NSP	6	Limited Warranty	ARY7043	Not used	Not used	Not used
	13	Packing Case	DHG2495	DHG2496	DHG2494	DHG2500

2.2 EXTERIOR SECTION

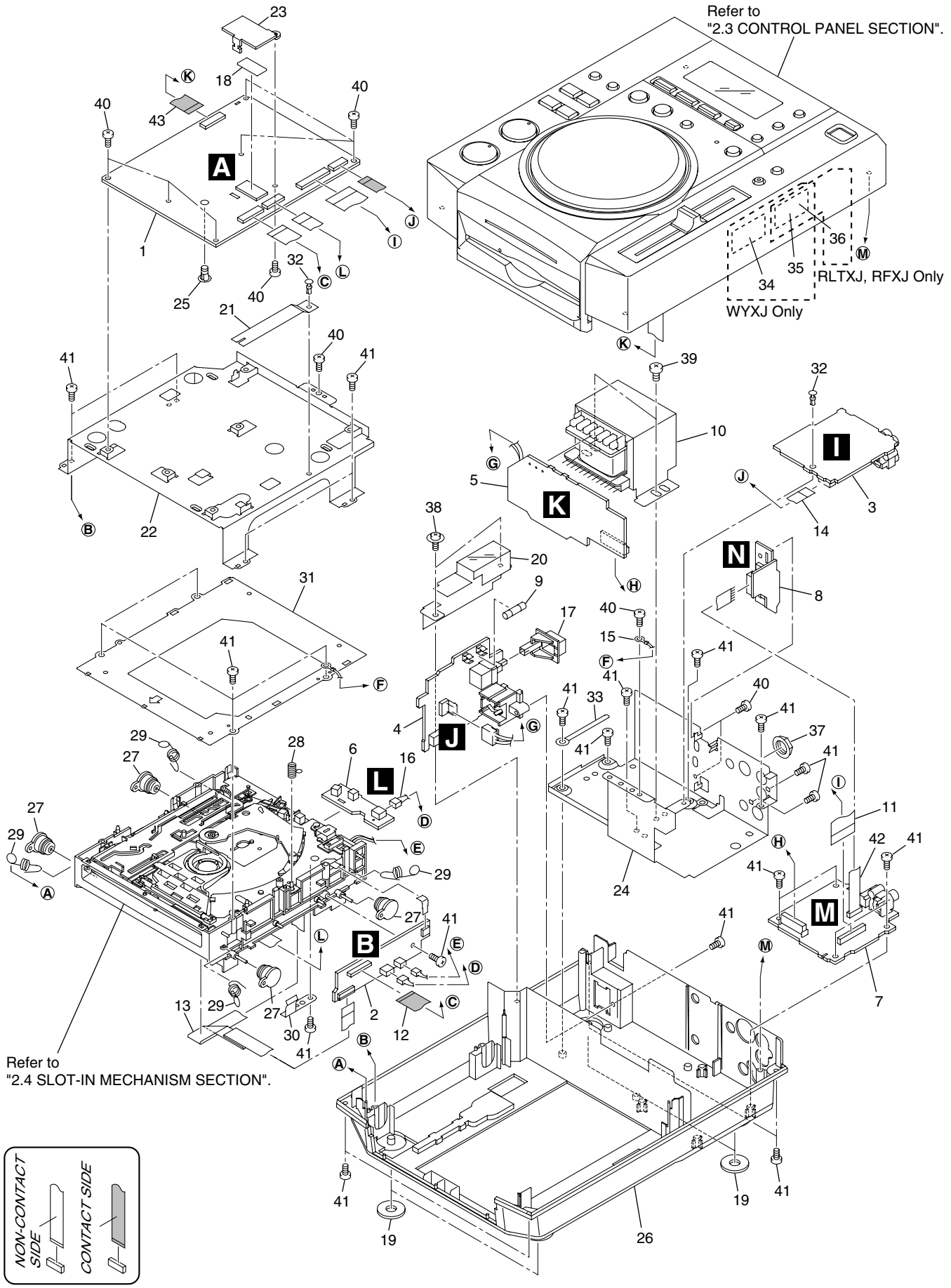

(1) EXTERIOR SECTION PARTS LIST

Mark	No.	Description	Part No.
	1	MAIN Assy	DWG1587
	2	RLYB Assy	DWX2429
	3	JACK Assy	DWX2433
	4	ACIN Assy	See Contrast table (2)
	5	TRNS Assy	See Contrast table (2)
	6	SLMB Assy	DWS1355
	7	SECB Assy	DWR1394
	8	REGB Assy	DWR1393
⚠	9	Fuse (FU11)	See Contrast table (2)
⚠	10	Power Transformer (T22)	See Contrast table (2)
	11	24P Flexible Cable	DDD1275
	12	32P Flexible Cable	DDD1276
	13	24P Flexible Cable	DDD1278
	14	9P Flexible Cable	DDD1279
	15	Earth Lead Unit/300V	DDF1032
	16	Connector Assy	PF03PP-B17
	17	Power Button	DAC2254
NSP	18	Silicone Sheet D5 L	DEB1456
	19	Insulator	DEC2250
	20	Protector	DEC2808
	21	PU Caution	DEC2856
	22	PCB Stay	DNH2640
	23	Heatsink	DNH2641
	24	Trans. Plate	DNH2670
	25	Card Spacer	DNK2769
NSP	26	Chassis	See Contrast table (2)
	27	Damper	CNV6011
	28	Earth Spring	DBH1398
	29	Float Spring G5	DBH1494
	30	FPC Guard	DBK1282
	31	Mecha Plate	DNH2642
	32	Nyron Rivet (3 x 4.5)	RBM-003
	33	Cord Clamper	RNH-184
	34	Caution Label HE	See Contrast table (2)
	35	Caution Label	See Contrast table (2)
	36	Caution Label	See Contrast table (2)
	37	Nut M12	DBN1012
	38	DM Screw	DBA1260
	39	Screw	BBZ40P060FTC
	40	Screw	BBZ30P060FTC
	41	Screw	BPZ30P080FTC
	42	Jumper Wire 6P(J904)	D20PDY0610E
	43	15P Flexible Cable	DDD1277

(2) CONTRAST TABLE

CDJ-200/KUCXJ, RLTXJ, WYXJ and RFXJ are constructed the same except for the following:

Mark	No.	Symbol and Description	CDJ-200/ KUCXJ	CDJ-200/ RLTXJ	CDJ-200/ WYXJ	CDJ-200/ RFXJ
	4	ACIN Assy	DWR1388	DWR1389	DWR1387	DWR1389
	5	TRNS Assy	DWR1391	DWR1392	DWR1391	DWR1392
⚠	9	Fuse (FU11 : 2.0A/125V)	REK1111	Not used	Not used	Not used
⚠	9	Fuse (FU11 : T1AL250V)	Not used	REK1022	REK1022	REK1022
⚠	10	Power Transformer (T22)	DTT1172	DTT1171	DTT1171	DTT1171
NSP	26	Chassis	DNK4423	DNK4424	DNK4386	DNK4427
	34	Caution Label HE	Not used	Not used	PRW1233	Not used
	35	Caution Label	Not used	Not used	VRW1094	Not used
	36	Caution Label	Not used	PRW1018	Not used	DRW2248

2.3 CONTROL PANEL SECTION

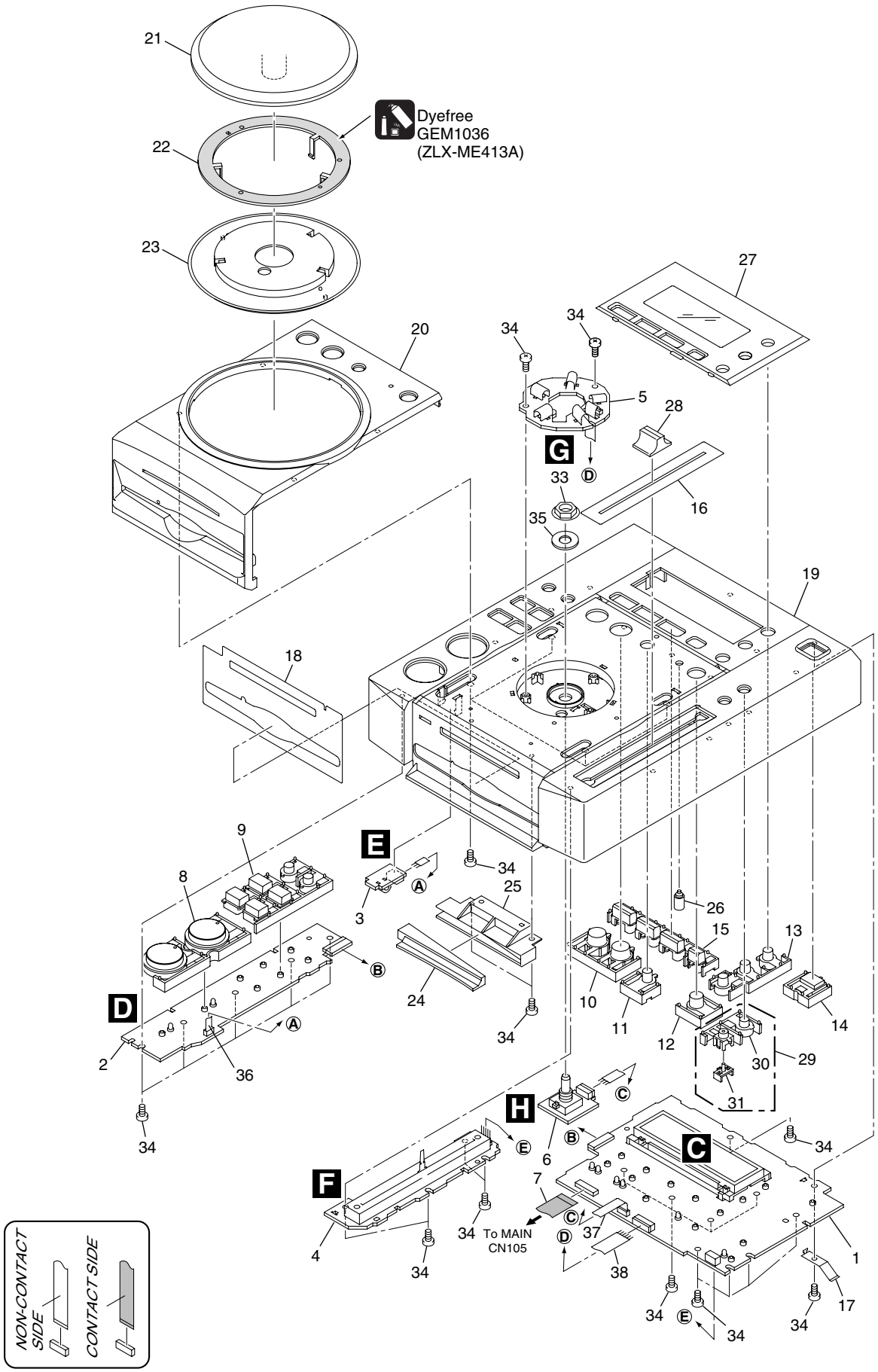

CONTROL PANEL SECTION PARTS LIST

Mark	No.	Description	Part No.
	1	DISP Assy	DWG1588
	2	KSWB Assy	DWS1356
	3	INDB Assy	DWX2438
	4	SLDB Assy	DWX2430
	5	JLED Assy	DWX2432
	6	JOGB Assy	DWX2431
	7	15P Flexible Cable	DDD1277
	8	PLAY Button	DAC2244
	9	SEARCH Button	DAC2245
	10	LOOP Button	DAC2246
	11	RELOOP Button	DAC2270
	12	BEAT LOOP Button	DAC2271
	13	TIME Button	DAC2249
	14	EJECT Button	DAC2253
	15	JET Button	DAC2266
	16	Slide Sheet (GRAY)	DAH2374
	17	Earth Plate	DBK1224
	18	Vessel Sheet	DEC2751
	19	Control Panel A	DNK4384
	20	Control Panel B	DNK4385
	21	Jog Dial	DNK4387
	22	POM Ring	DNK4388
	23	Jog Lens	DNK4389
	24	Front Lens	DNK4390
	25	Reflector	DNK4391
	26	BEAT Lens	DNK4392
	27	Display Panel	DNK4492
	28	Slide Knob (SILVER)	DNK4448
	29	TEMPO Button Assy	DXA2014
	30	TEMPO Button	DAC2258
	31	TEMPO Lens	DNK4421
	32	•••••	
	33	Nut M9	DBN1008
	34	Screw	BPZ30P080FTC
	35	JOG Washer	DBF1002
	36	Jumper Wire 3P	D20PDY0305E
	37	Jumper Wire 4P	D20PDY0405E
	38	Jumper Wire 6P	D20PDY0610E

2.4 SLOT-IN MECHANISM SECTION

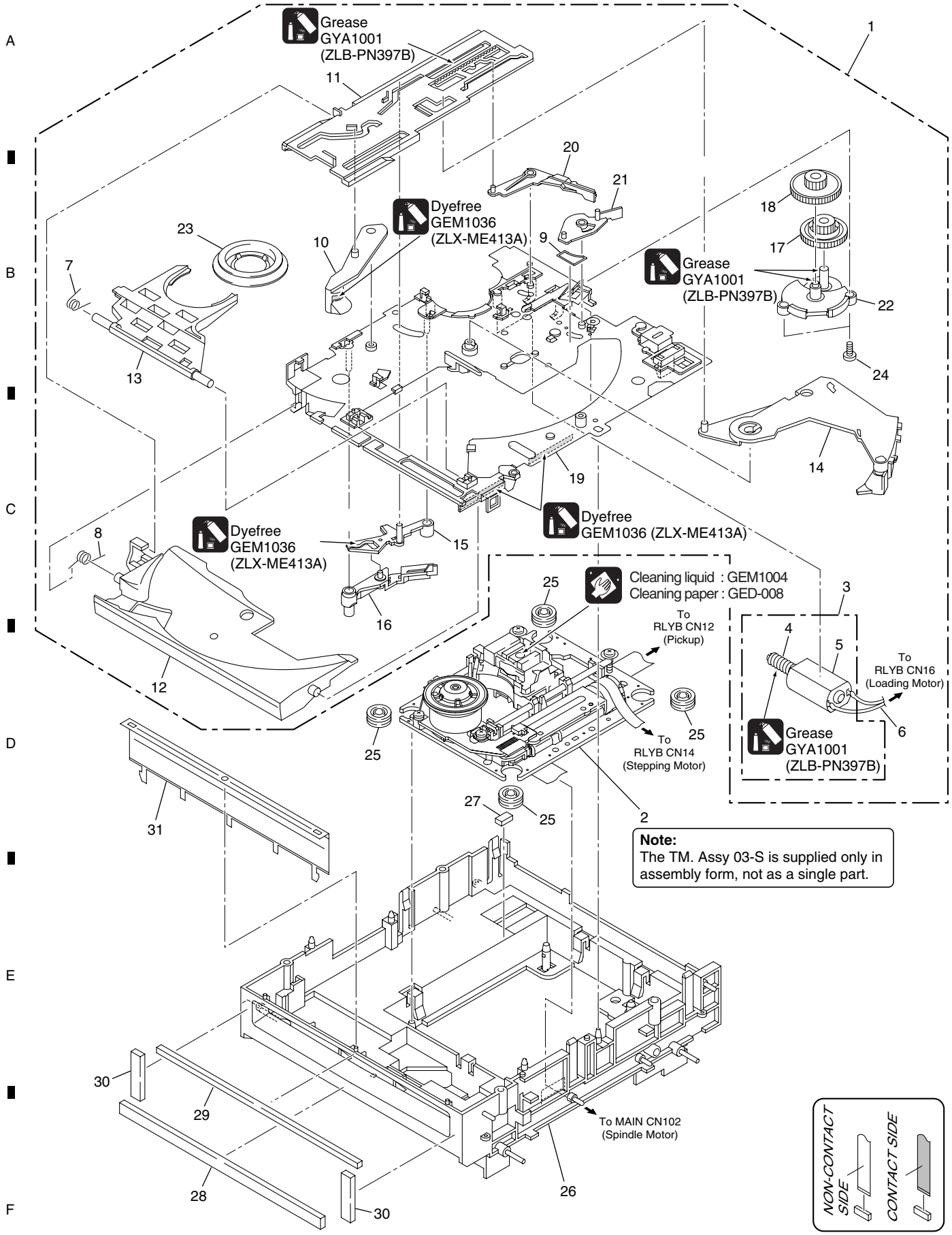

Note:
The TM. Assy 03-S is supplied only in assembly form, not as a single part.

SLOT-IN MECHANISM SECTION PARTS LIST

Mark	No.	Description	Part No.
NSP	1	Slot-in Mecha SV Assy	DXA2005
	2	TM. Assy 03-S	VXX2909
	3	DC Motor Assy-S	DXX2510
NSP	4	Worm Gear	DNK3910
NSP	5	DC Motor S (ROHS)	DXM1230
	6	Connector Assy	PF02PY-B22
	7	Clamp Spring	DBH1374
	8	Guide Spring	DBH1375
	9	SW Lever Spacer SV	DEC2831
	10	Loading Lever	DNK3406
	11	Main Cam	DNK3407
	12	Disc Guide	DNK3478
	13	Clamp Arm	DNK3576
	14	Eject Lever	DNK3684
	15	Lever AP	DNK3835
	16	Lever BP	DNK3836
	17	Loading Gear	DNK3911
	18	Drive Gear	DNK3912
	19	Loading Base SV	DNK4369
	20	SW Lever SV1	DNK4370
	21	SW Lever SV2	DNK4371
	22	Gear Holder SV	DNK4372
	23	Clamper 04 Assy	DXB1859
	24	Screw	BPZ20P060FTC
	25	Floating Rubber (SI)	VEB1351
	26	Float Base 04 Assy	DXB1838
	27	Spacer POR (T3)	DEB1566
	28	Vessel Cushion A	DEC2852
	29	Vessel Cushion B	DEC2853
	30	Vessel Cushion C	DEC2854
	31	Front Sheet	DED1132