2. EXPLODED VIEWS AND PARTS LIST

NOTES :
- *Parts marked by "* NSP *" are generally unavailable because they are not in our Master Spare Parts List.*
- *The ⚠ mark found on some component parts indicates the importance of the safety factor of the part. Therefore, when replacing, be sure to use parts of identical designation.*
- *Screw adjacent to ▼ mark on the product are used for disassembly.*

2.1 PACKING

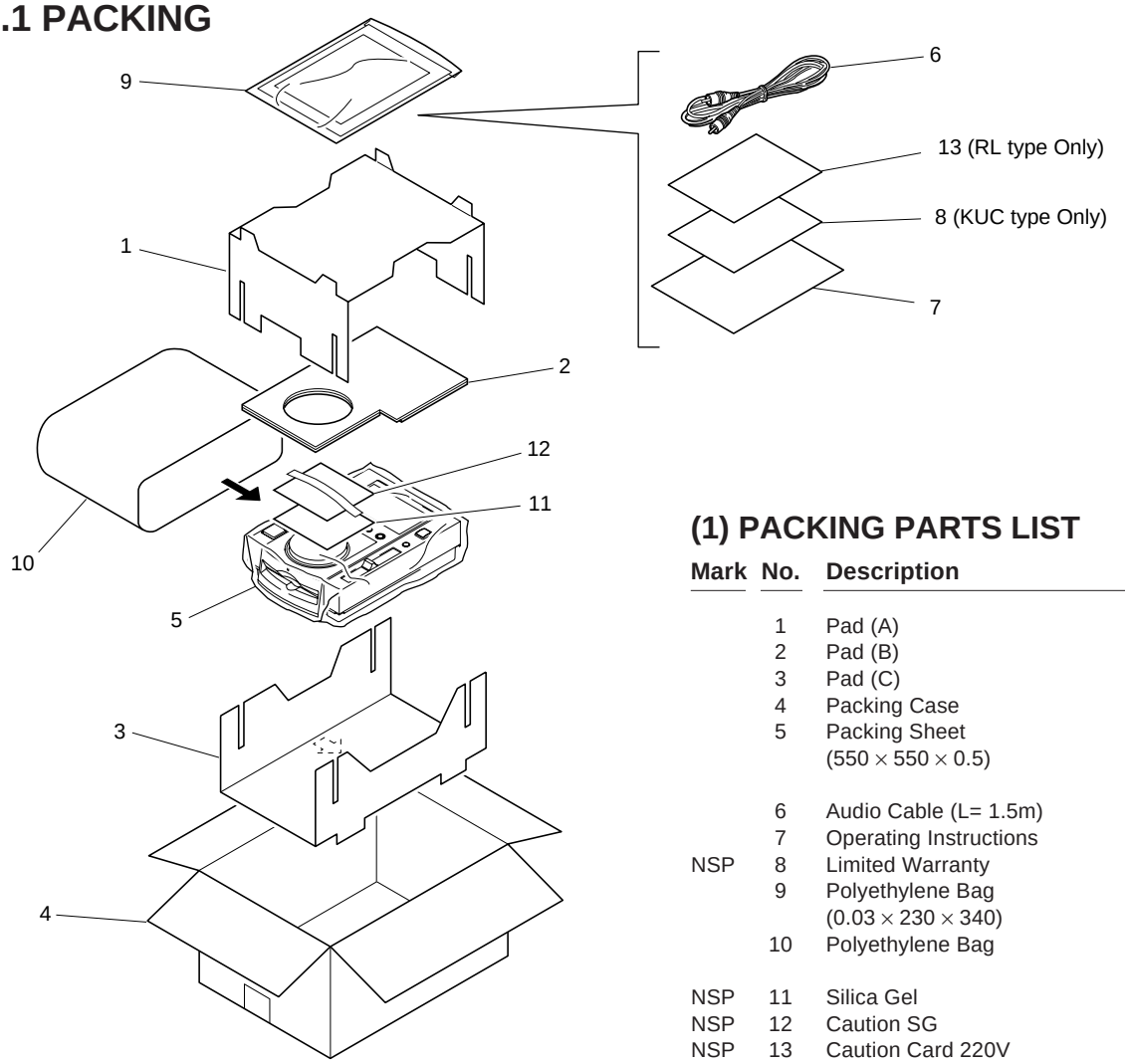

(1) PACKING PARTS LIST

Mark	No.	Description	Part No.
	1	Pad (A)	DHA1411
	2	Pad (B)	DHA1412
	3	Pad (C)	DHA1413
	4	Packing Case	See Contrast table (2)
	5	Packing Sheet (550 × 550 × 0.5)	Z23–026
	6	Audio Cable (L= 1.5m)	VDE1033
	7	Operating Instructions	See Contrast table (2)
NSP	8	Limited Warranty	See Contrast table (2)
	9	Polyethylene Bag (0.03 × 230 × 340)	Z21–038
	10	Polyethylene Bag	DHL1106
NSP	11	Silica Gel	AEN7001
NSP	12	Caution SG	DRM1199
NSP	13	Caution Card 220V	See Contrast table (2)

(2) CONTRAST TABLE

CDJ-100S/KUC, RL and WY are constructed the same except for the following:

Mark	No.	Symbol and Description	Part No.			Remarks
			KUC type	RL type	WY type	
	4	Packing Case	DHG1852	DHG1851	DHG1850	
	7	Operating Instructions (English)	DRB1232	Not used	Not used	
	7	Operating Instructions (English/Spanish/Chinese)	Not used	DRB1229	Not used	
	7	Operating Instructions (English/French/German/Italian/ Dutch/Spanish)	Not used	Not used	DRB1227	
NSP	8	Limited Warranty	DRY1177	Not used	Not used	
NSP	13	Caution Card 220V	Not used	ARR7003	Not used	

2.2 EXTERIOR (1/2)

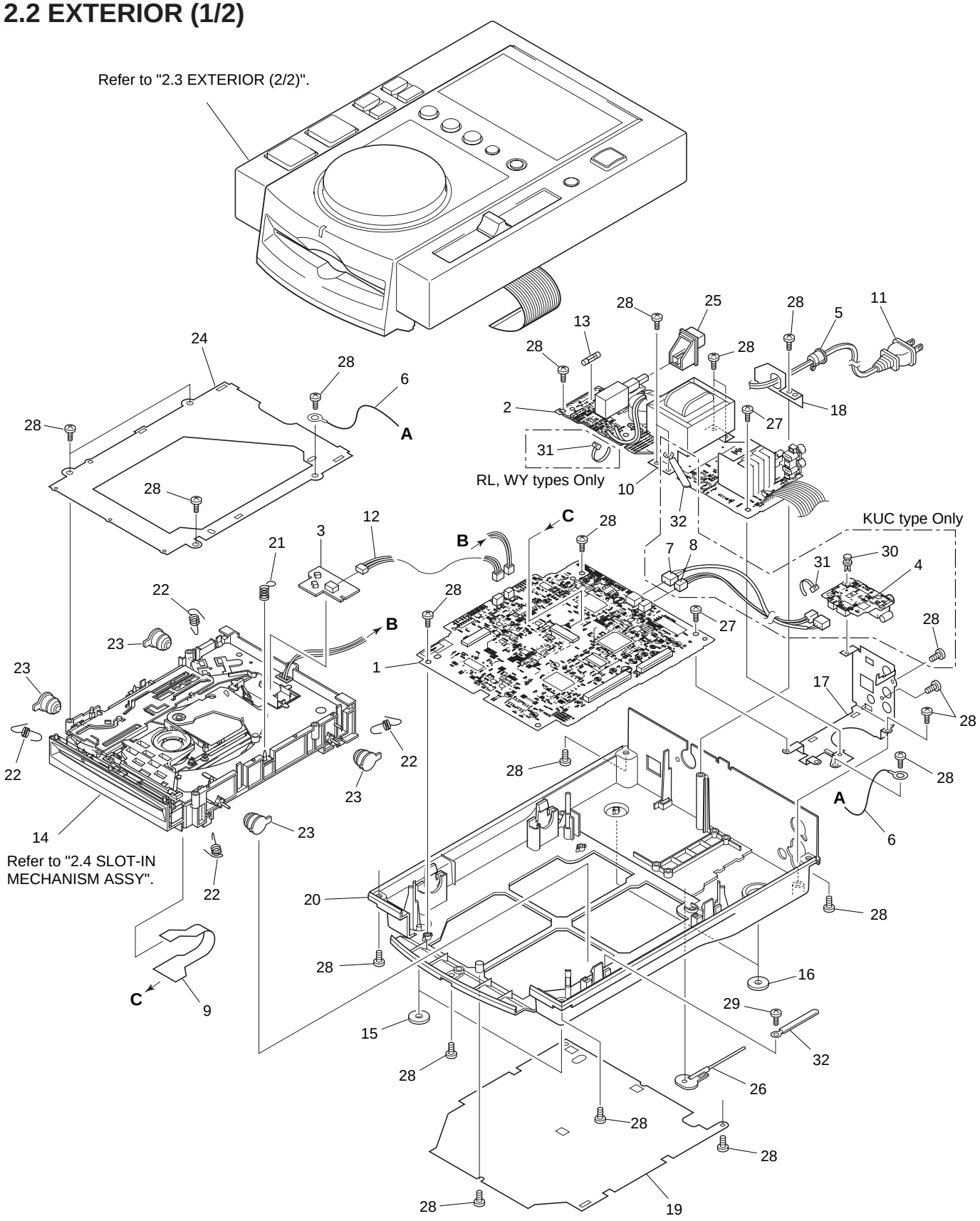

(1) EXTERIOR (1/2) PARTS LIST

Mark	No.	Description	Part No.
	1	MOTHER BOARD ASSY	See Contrast table (2)
	2	TRANS BOARD ASSY	See Contrast table (2)
NSP	3	SL MECHA BOARD ASSY	DWS1294
NSP	4	DIGITAL OUT BOARD ASSY	See Contrast table (2)
	5	Strain Relief	See Contrast table (2)
	6	Earth Lead Unit/300V	DDF1010
	7	Connector Assy	See Contrast table (2)
	8	Connector Assy (2P)	See Contrast table (2)
	9	S Flex	DNP1748
⚠	10	Power Transformer	See Contrast table (2)
⚠	11	AC Power Cord	See Contrast table (2)
⚠	12	Connector Assy	PF03PP–B30
⚠	13	Fuse (FU1)	See Contrast table (2)
NSP	14	Slot-in Mechanism Assy	DXA1845
	15	Insulator	DEC2235
	16	Insulator MO	DEC2250
	17	Earth Plate	DNF1588
	18	Cable Stay	DNF1589
	19	Bottom Plate	See Contrast table (2)
NSP	20	Chassis	See Contrast table (2)
	21	Earth Spring	DBH1398
	22	Float Spring	DBH1428
	23	Damper	DEC2236
	24	Mecha Holder	DNH2339
	25	Power Knob	DAC1895
	26	Push Rod	DEX1008
	27	Screw	BBZ30P080FMC
	28	Screw	BPZ30P080FZK
	29	Screw	BPZ30P140FMC
	30	Nylon Rivet (3 × 4.5)	See Contrast table (2)
	31	Binder	ZCA–SKB90BK
NSP	32	Binder	Z09–061

(2) CONTRAST TABLE

CDJ-100S/KUC, RL and WY are constructed the same except for the following:

Mark	No.	Symbol and Description	Part No.			Remarks
			KUC type	RL type	WY type	
	1	MOTHER BOARD Assy	DWM2078	DWM2079	DWM2079	
	2	TRANS BOARD Assy	DWR1298	DWR1301	DWR1300	
NSP	4	DIGITAL OUT BOARD Assy	DWZ1082	Not used	Not used	
	5	Strain Relief	CM–22C	CM–22B	CM–22B	
	7	Connector Assy	DKP3408	Not used	Not used	
	8	Connector Assy (2P)	DKP3409	Not used	Not used	
⚠	10	Power Transformer (AC120V)	DTT1148	Not used	Not used	
⚠	10	Power Transformer (AC110–120V/220–240V)	Not used	DTT1149	Not used	
⚠	10	Power Transformer (AC220–240V)	Not used	Not used	DTT1150	
⚠	11	AC Power Cord	PDG1063	PDG1003	PDG1003	
⚠	13	Fuse (FU1)	VEK1009	AEK1051	AEK1051	
	19	Bottom Plate	DNH2341	DNH2338	DNH2338	
NSP	20	Chassis	DNK3562	DNK3561	DNK3553	
	30	Nylon Rivet (3 × 4.5)	RBM–003	Not used	Not used	

2.3 EXTERIOR (2/2)

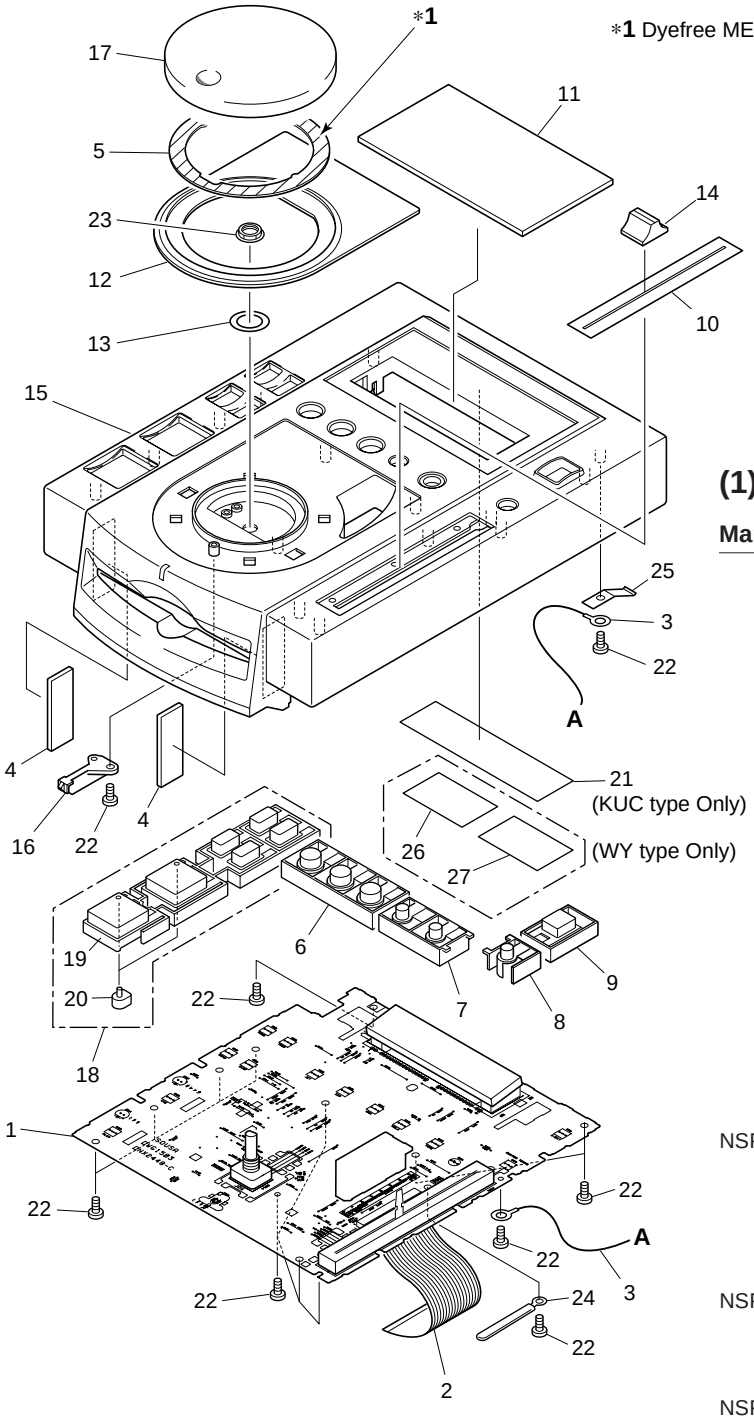

***1** Dyefree ME-413A: ZLX-ME413A

(1) EXTERIOR (2/2) PARTS LIST

Mark	No.	Description	Part No.
	1	DISPLAY BOARD ASSY	DWG1503
	2	36P F·F·C/60V	DDD1131
	3	Earth Lead Unit/300V	PDF1104
	4	Cushion C	DEC2259
	5	POM Ring	DNK3556
	6	Knob B	DAC1891
	7	Time Knob	DAC1892
	8	MT Knob	DAC1893
	9	Eject Knob	DAC1894
	10	Slide Sheet	DAH1855
	11	Display Plate	DAH1886
	12	Ring Plate	DAH1887
	13	Jog Washer	DBF1001
	14	Slide Knob	DNK2936
	15	Control Panel	DNK3552
	16	Disc Indicator	DNK3555
	17	Jog Dial	DNK3625
	18	Knob A Assy	DXA1846
NSP	19	Knob A	DAC1890
	20	LED Lens	PNW2019
	21	65 Label	See Contrast table (2)
	22	Screw	BPZ30P080FZK
	23	Nut (M9)	DBN1004
NSP	24	Binder	Z09–061
	25	Earth Plate	VBK1070
	26	Caution Label	See Contrast table (2)
NSP	27	Caution Label HE	See Contrast table (2)

(2) CONTRAST TABLE

CDJ-100S/KUC, RL and WY are constructed the same except for the following:

Mark	No.	Symbol and Description	Part No.			Remarks
			KUC type	RL type	WY type	
	21	65 Label	ORW1069	Not used	Not used	
	26	Caution Label	Not used	Not used	VRW1094	
NSP	27	Caution Label HE	Not used	Not used	VRW1297	

2.4 SLOT-IN MECHANISM ASSY

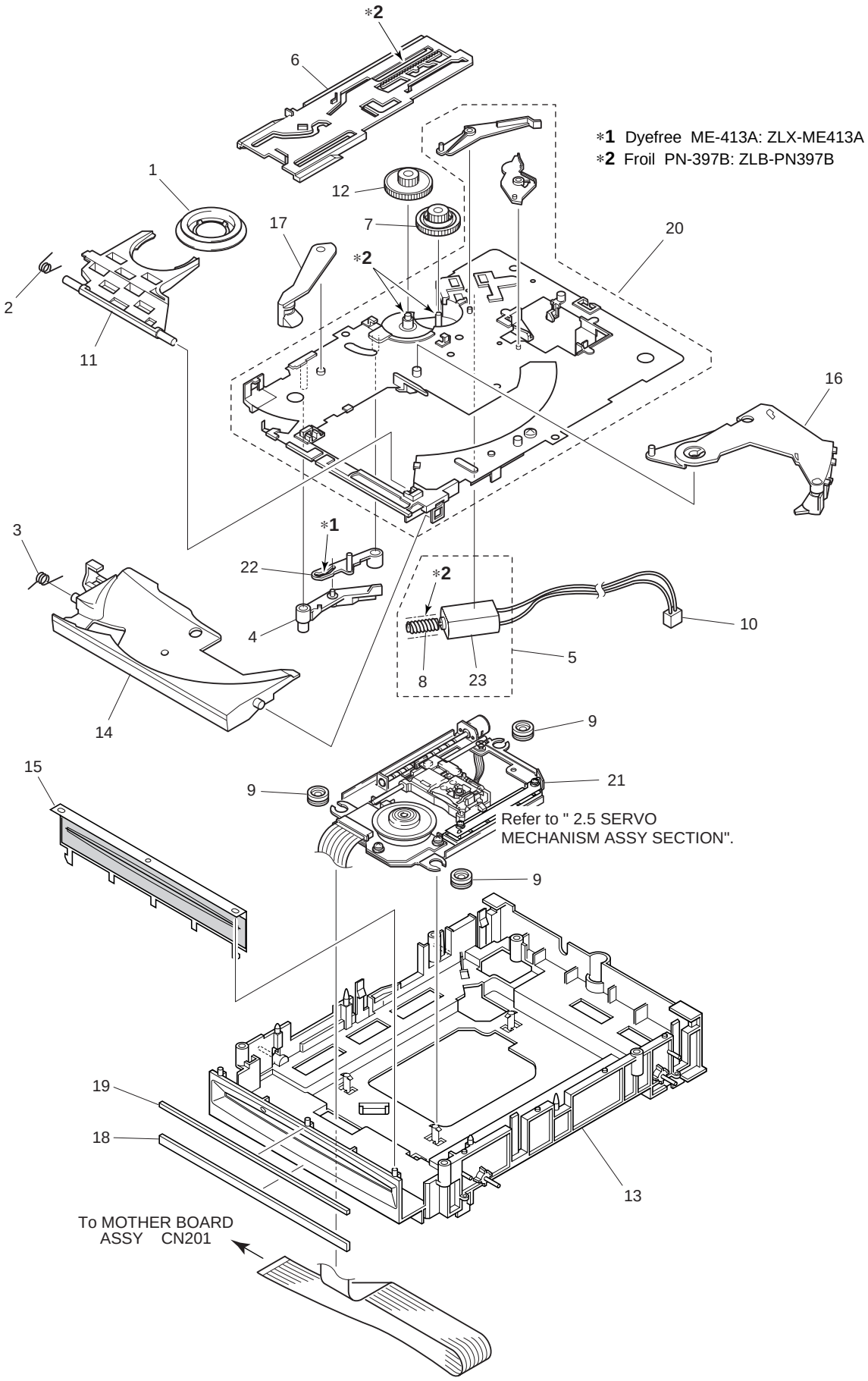

■ SLOT-IN MECHANISM ASSY PARTS LIST

Mark	No.	Description	Part No.
	1	Clamper Assy	DXA1821
	2	Clamp Spring	DBH1374
	3	Guide Spring	DBH1375
	4	Lever B	DNK3558
	5	Loading Motor Assy-S	DEA1008
	6	Main Cam	DNK3407
	7	Loading Gear	DNK3409
NSP	8	Worm Gear	DNK3410
	9	Mount Bush	DEB1328
	10	Connector Assy	PF02PY-B27
	11	Clamp Arm	DNK3404
	12	Drive Gear	DNK3565
	13	Float Base Assy	DXB1683
	14	Disc Guide	DNK3478
	15	Front Sheet	DED1132
	16	Eject Lever	DNK3548
	17	Loading Lever	DNK3406
	18	Cushion A	DEC2257
	19	Cushion B	DEC2258
	20	Loading Base Assy-S	DXX2431
	21	Servo Mechanism Assy-S	DXX2432
	22	Lever A	DNK3564
NSP	23	Loading Motor	DXM1093

2.5 SERVO MECHANISM ASSY

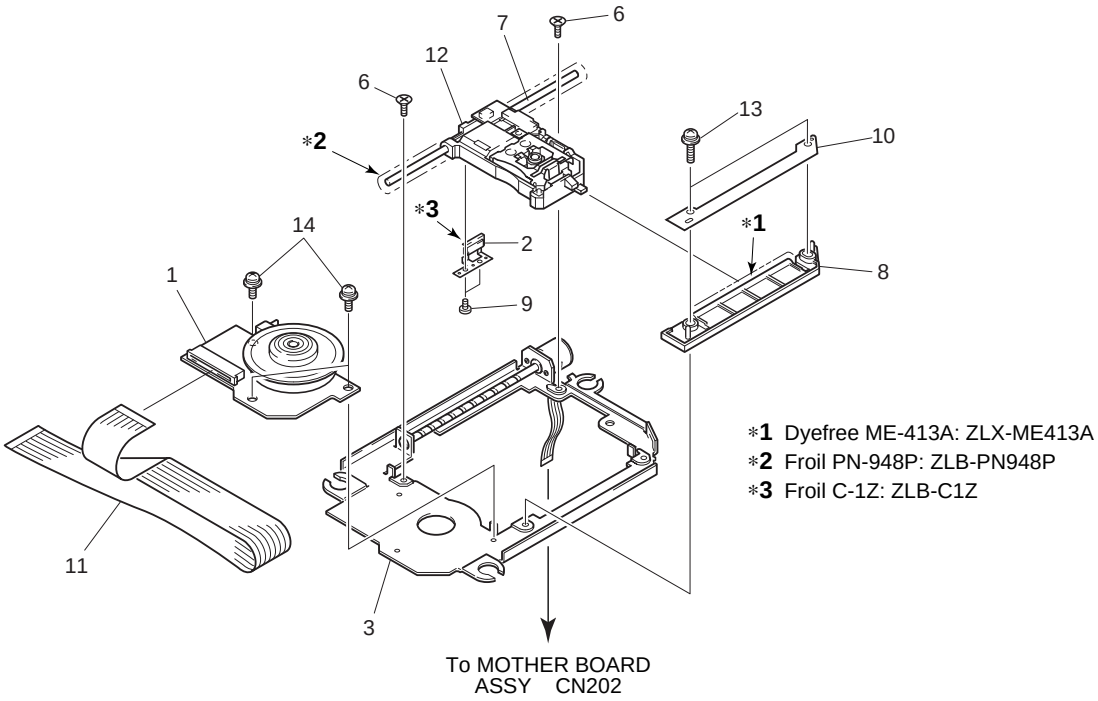

■ SERVO MECHANISM ASSY PARTS LIST

Mark	No.	Description	Parts No.
	1	Spindle Motor	DXM1084
	2	Screw Guide	DNK3238
	3	Pulse Motor Frame	DXM1085
	4	……	
	5	……	
	6	Screw	CMZ20P060FMC
	7	Guide Shaft	DLA1731
	8	Sub Guide Shaft	DNK3638
	9	Screw	ABA7022
	10	Stopper	DNH2355
	11	SPD Card	DDX1165
NSP	12	Pickup Assy	DWY1069
	13	Screw	PMA20P080FMC
	14	Screw	PMH20P040FCC