2. EXPLODED VIEWS AND PARTS LIST

NOTES: ● *Parts marked by "NSP" are generally unavailable because they are not in our Master Spare Parts List.*
● *The ⚠ mark found on some component parts indicates the importance of the safety factor of the part. Therefore, when replacing, be sure to use parts of identical designation.*
● *Screws adjacent to ▼ mark on product are used for disassembly.*
● *For the applying amount of lubricants or glue, follow the instructions in this manual. (In the case of no amount instructions, apply as you think it appropriate.)*

2.1 PACKING

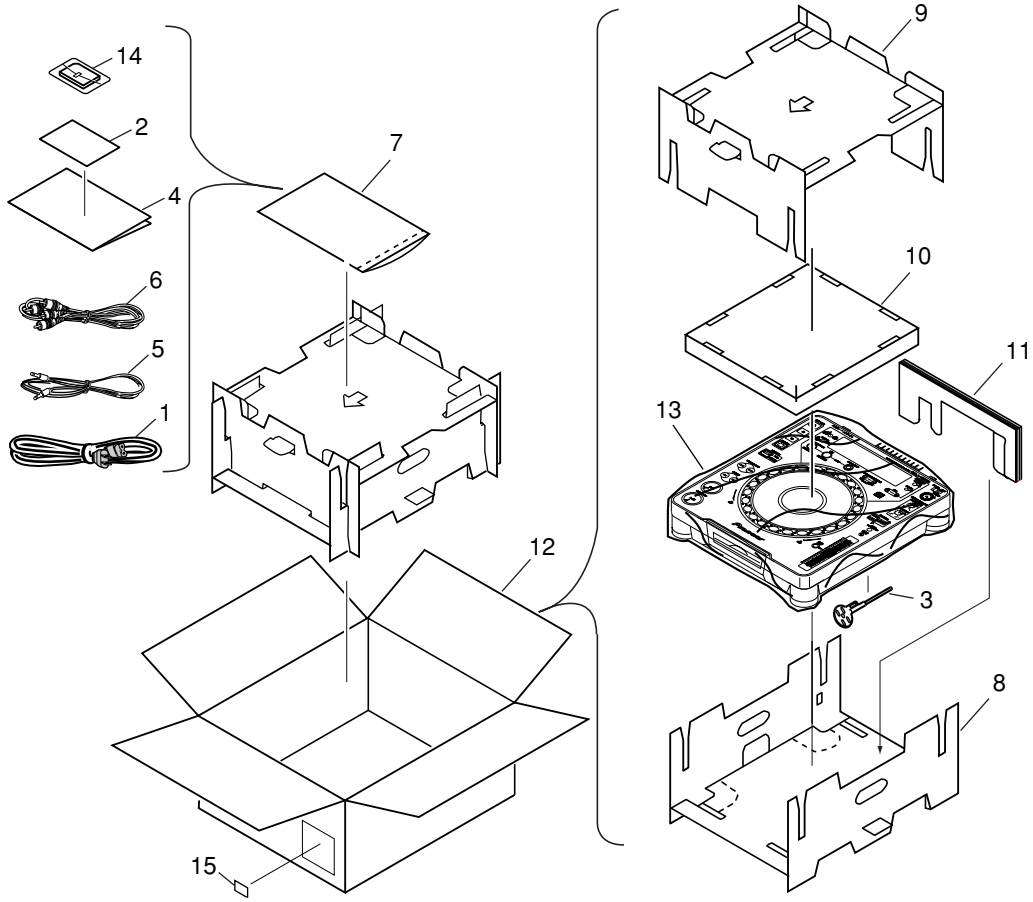

PACKING Parts List

Mark	No.	Description	Part No.
⚠	1	Power Cord	See Contrast Table(2)
NSP	2	Warranty Card	See Contrast Table(2)
	3	Forced Eject Pin	DEX1013
	4	Operating Instructions	See Contrast Table(2)
	5	Control Cord (L= 1m)	PDE-319
	6	Audio Cable (L= 1.5m)	VDE1064
NSP	7	Polyethylene Bag (230 x 340 x 0.03)	Z21-038
	8	Pad (A)	DHA1533
	9	Pad (B)	DHA1534
	10	Pad (C)	DHA1535
	11	Pad (D)	DHA1536
	12	Packing Case	See Contrast Table(2)
	13	Sheet	RHX1006
	14	MMC Memory Card	DWX2326
NSP	15	Label	VRW1629

(2) CONTRAST TABLE

CDJ-1000MK2/KUCXJ, TLXJ and WYXJ types are constructed the same except for the following:

Mark	No.	Symbol and Description	Part No.		
			KUCXJ type	TLXJ type	WYXJ type
⚠	1	Power Cord	ADG7021	ADG1154	ADG1154
NSP	2	Warranty Card	ARY7043	Not used	Not used
	4	Operating Instructions (English)	DRB1339	Not used	Not used
	4	Operating Instructions (English, Spanish, Chinese)	Not used	DRB1340	Not used
	4	Operating Instructions (English, French, German, Italian, Dutch, Spanish)	Not used	Not used	DRB1338
	12	Packing Case	DHG2363	DHG2364	DHG2362

2.2 EXTERIOR SECTION (1/2)

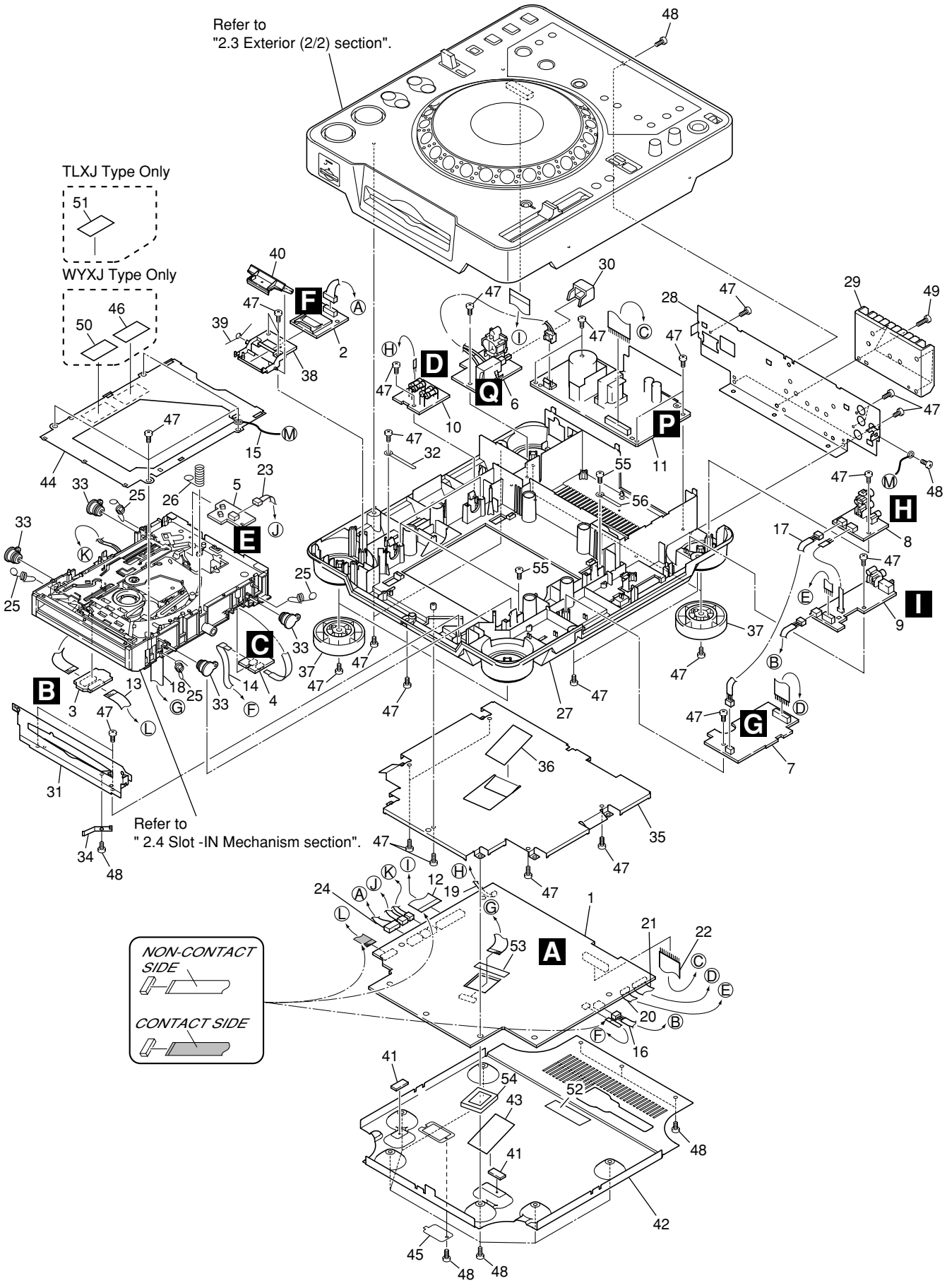

EXTERIOR SECTION (1/2) Parts List

Mark	No.	Description	Part No.
	1	MAIN Assy	DWX2303
	2	MMCB Assy	DWX2304
	3	SPCN Assy	DWX2170
	4	STCN Assy	DWX2171
	5	SLMB Assy	DWX1309
	6	PSWB Assy	See Contrast Table(2)
	7	DABB Assy	DWX2305
	8	JACB Assy	DWX2306
	9	DOUT Assy	DWX2307
	10	FLRB Assy	DWX2308
	11	SW POWER SUPPLY Assy	DWR1370
	12	25P Flexible Cable/60V	DDD1196
	13	12P Flexible Cable/60V	DDD1197
	14	4P Flexible Cable/60V	DDD1198
	15	Earth Lead Unit/300V	DDF1024
	16	Connector Assy 3P	DKP3562
	17	Connector Assy 6P	DKP3654
	18	FPC D5 Slot	DNP1948
	19	Jumper Wire 03P	D20PYY0310E
	20	Jumper Wire 05P	D20PYY0510E
	21	Jumper Wire 09P	D20PYY0910E
	22	Jumper Wire 15P	D20PYY1510E
	23	Connector Assy	PF03PP-B30
	24	Connector Assy	PF09PP-D15
	25	Float Spring (G5)	DBH1494
	26	Earth Spring	DBH1398
	27	Chassis	DNK3869
NSP	28	Rear Panel	See Contrast Table(2)
	29	Heat Sink	DNG1082
	30	Power Knob	DAC1895
	31	Front Plate	DNH2480
	32	Cord Clamper	RNH-184
	33	Damper	CNV6011
	34	Earth Plate (CU)	VBK1070
	35	Shield Case	DNH2481
	36	Shield Cushion	DEC2445
	37	Insulator Assy	DXA1904
	38	Memory Holder	DNK3884
	39	Flap Spring	DBH1487
	40	SD Flap	DNK3883
NSP	41	Silicone Rubber D5L	DEB1456
	42	Bottom Plate 2	DNH2558
	43	Bottom Cushion	DEC2444
	44	Mecha Plate	DNH2339
	45	Bottom Cover	DNH2559
	46	Caution Label	See Contrast Table(2)
	47	Screw	BPZ30P080FZK
	48	Screw	BBZ30P060FZK
	49	Screw	BBZ30P120FZK
	50	Caution Label HE	See Contrast Table(2)
	51	Caution Label	See Contrast Table(2)
	52	65 Label	See Contrast Table(2)
	53	Protect Sheet	DEC2559
	54	PU Packing	DEC2593
	55	Screw	SBPZ30P140FMC
	56	Cord Clamper	ZCB-069Z

(2) CONTRAST TABLE

CDJ-1000MK2/KUCXJ, TLXJ and WYXJ types are constructed the same except for the following:

Mark	No.	Symbol and Description	Part No.		
			KUCXJ type	TLXJ type	WYXJ type
	6	PSWB Assy	DWS1312	DWS1311	DWS1311
NSP	28	Rear Panel	DNC1647	DNC1648	DNC1646
	46	Caution Label	Not used	Not used	VRW1094
	50	Caution Label HE	Not used	Not used	PRW1233
	51	Caution Label	Not used	PRW 1018	Not used
	52	65 Label	ARW7050	Not used	Not used

2.3 EXTERIOR SECTION (2/2)

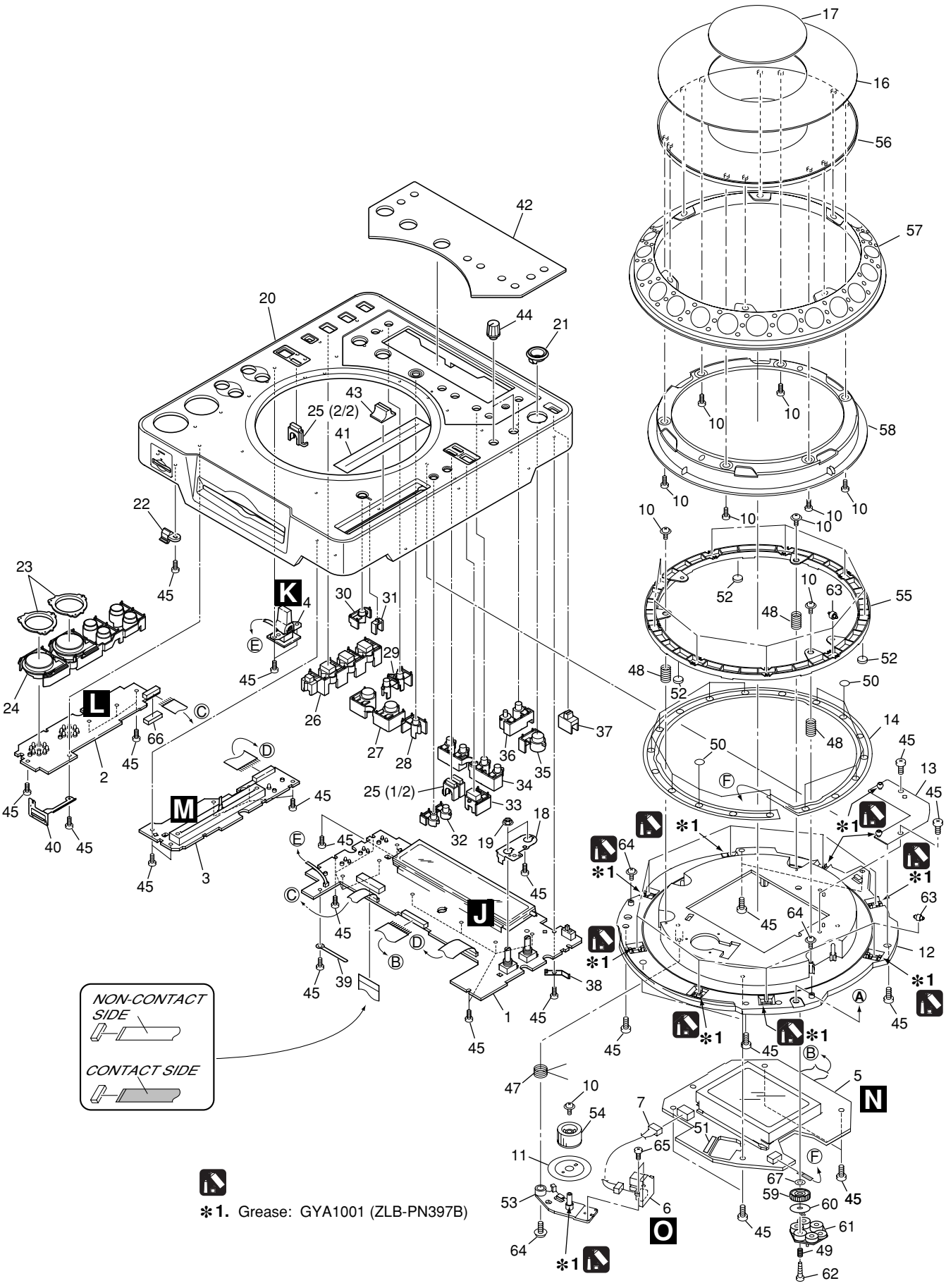

EXTERIOR SECTION (2/2) Parts List

Mark	No.	Description	Part No.
	1	MFLB Assy	DWG1567
	2	KSWB Assy	DWS1324
	3	SLDB Assy	DWS1325
	4	RSWB Assy	DWS1310
	5	JFLB Assy	DWG1568
	6	JOGB Assy	DWG1569
	7	Connector Assy	PF04PP-B07
	8	• • • • •	
	9	• • • • •	
	10	Screw	PBA1062
	11	Encoder Plate	DEC2498
	12	JOG Holder 2	DNK4175
	13	JOG Stay Assy	DXB1780
	14	Sheet SW	DSX1060
	15	• • • • •	
	16	JOG Plate	DAH2052
	17	JOG Panel	DAH2182
	18	VR Stay	DNF1663
	19	Flange Nut (M9)	DBN1004
	20	Control Panel	DNK4180
	21	Eject Guard	DNK3958
	22	Card Lens	DNK3885
	23	Ring Lens	DNK3880
	24	Set Knob (PLAY) Assy	DXB1762
	25	Mode Lens	DNK3881
	26	Set Knob (HS)	DAC1986
	27	Set Knob (LOOP)	DAC1995
	28	Re-loop Knob	DAC1992
	29	Set Knob (TIME)	DAC1991
	30	Tempo Reset Knob	DAC1993
	31	Tempo Lens	DNK3882
	32	Set Knob (MT)	DAC1987
	33	Mode Select Knob	DAC1989
	34	Set Knob (SC)	DAC1988
	35	Eject Knob	DAC1990
	36	Set Knob (MEMO)	DAC1994
	37	Slide SW Knob	DAC1926
	38	Earth Plate (CU)	VBK1070
NSP	39	Cord Clamper	ZCB-069Z
	40	Card Plate	DBK1212
	41	Slide Sheet 1C	DAH1988
	42	Display Panel	DAH2022
	43	Slide Knob	DNK2936
	44	Rotary Knob C	DAA1143
	45	Screw	BPZ30P080FZK
	46	• • • • •	
	47	Arm Spring	DBH1503
	48	SW Spring 25	DBH1514
	49	Gear Spring 200	DBH1525
	50	SW Cushion HH48/2	DEC2538
	51	Spacer	DEC2554
	52	Ring Cushion	DEC2604
	53	Gear Arm	DNK4065
	54	D Gear	DNK4066
	55	SW Ring	DNK4070
	56	JOG A	DNK4172
	57	JOG B	DNK4173
	58	JOG C	DNK4174
	59	Gear	DNK4176
	60	Smoother	DNK4177
	61	ADJ Plate	DNK4178
	62	Screw	BPZ20P100FMC
	63	Roller A Assy	DXB1773
	64	Screw	IPZ30P100FMC
	65	Screw	BPZ20P060FMC
	66	FFC Guard	DEC2586
	67	Washer	WA42D080D050

2.4 SLOT-IN MECHANISM SECTION

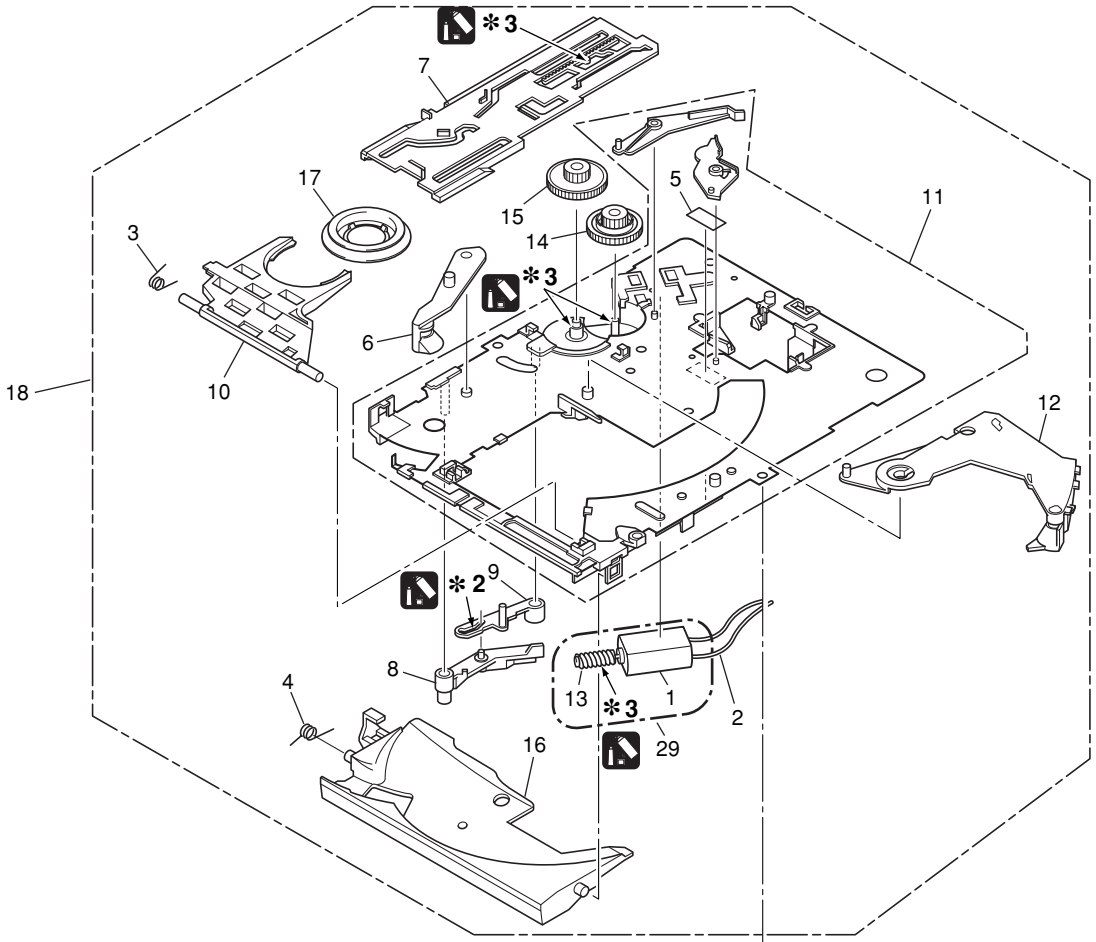

Refer to " 2.5 TRAVERSE MECHANISM ASSY-S ".

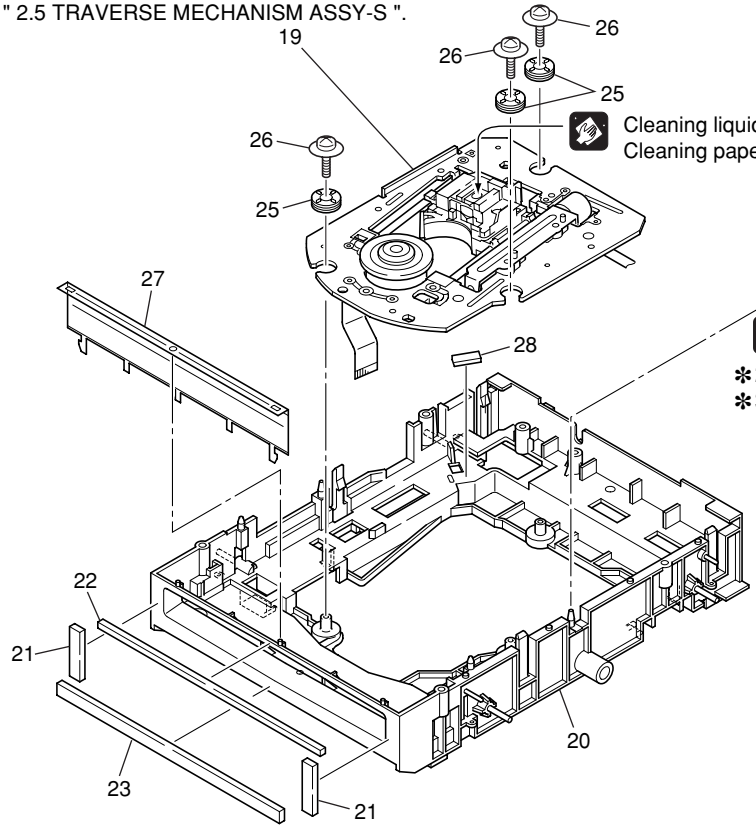

✻2. Dyefree : GEM1036 (ZLX-ME413A)
✻3. Grease: GYA1001 (ZLB-PN397B)

SLOT-IN MECHANISM SECTION Parts List

Mark	No.	Description	Part No.
NSP	1	DC Motor	DXM1093
	2	Connector Assy	PF02PY-B32
	3	Clamp Spring	DBH1374
	4	Guide Spring	DBH1375
	5	SW Lever Spacer (PET)	DEC2420
	6	Loading Lever	DNK3406
	7	Main Cam	DNK3407
	8	Lever B	DNK3558
	9	Lever A	DNK3564
	10	Clamp Arm	DNK3576
	11	Loading Base Assy-S	DEA1022
	12	Eject Lever	DNK3684
NSP	13	Worm Gear	DNK3910
	14	Loading Gear	DNK3911
	15	Drive Gear	DNK3912
	16	Disc Guide	DNK3914
	17	Clamper D4 Assy	DXA1881
NSP	18	Slot-in Mechanism G5 Assy	DXA1906
	19	Traverse Mechanism Assy-S	DXX2502
	20	Float Base (G5) Assy	DXB1748
	21	Vessel Cushion C	DEC2457
	22	Vessel Cushion A	DEC2455
	23	Vessel Cushion B	DEC2456
	24	•••••	
	25	Float Rubber D3	DEB1404
	26	Float Fastener	DBA1139
	27	Front Sheet	DED1132
	28	Spacer POR (T3)	DEB1566
	29	Loading Motor Assy-S	DEA1008

2.5 TRAVERSE MECHANISM ASSY-S

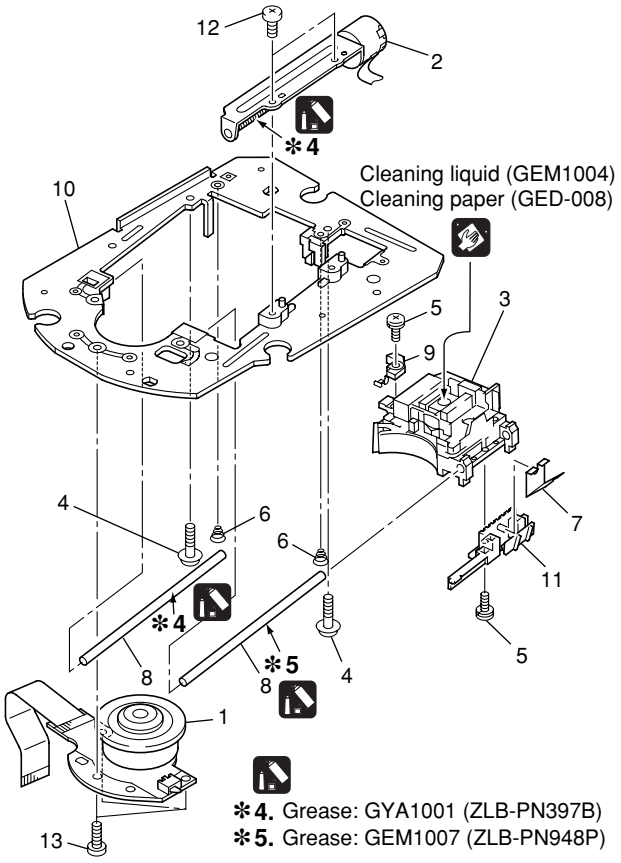

TRAVERSE MECHANISM ASSY-S Parts List

Mark	No.	Description	Part No.
NSP	1	Spindle Motor	DXM1138
NSP	2	Stepping Motor	DXM1142
NSP	3	Pickup Assy	VWY1069
NSP	4	Adjust Screw	DBA1119
NSP	5	Precision Screw	DBA1124
NSP	6	Skew Spring	DBH1437
NSP	7	Joint Spring	DBK1188
NSP	8	Guide Shaft	DLA1840
NSP	9	Slider G4	DNK3733
NSP	10	Mechanism Frame G5	DNK3776
NSP	11	Joint	DNK3777
	12	Screw	BPZ20P080FMC
	13	Screw	BPZ26P080FMC