PortableGrand

DGX-660B/DGX-660WH

SERVICE MANUAL



DGX-660B



DGX-660WH

■CONTENTS

SPECIFICATIONS 3
PANEL LAYOUT 6
CIRCUIT BOARD LAYOUT&WIRING 8
BLOCK DIAGRAM 10
DISASSEMBLY PROCEDURE 11
CIRCUIT BOARDS 22
DM CIRCUIT BOARD TEST METHOD 31
TEST PROGRAM 32
BACKUP 37
INITIALIZATION 37
SYSTEM BOOTING FLOW CHART 38
PARTS LIST (DGX-650B/DGX-650WH)
OVERALL CIRCUIT DIAGRAM

CL 001927

YAMAHA
HAMAMATSU, JAPAN

Copyright (c) Yamaha Corporation. All rights reserved. '16.02

IMPORTANT NOTICE

This manual has been provided for the use of authorized Yamaha Retailers and their service personnel. It has been assumed that basic service procedures inherent to the industry, and more specifically Yamaha Products, are already known and understood by the users, and have therefore not been restated.

WARNING: Failure to follow appropriate service and safety procedures when servicing this product may result in personal injury, destruction of expensive components and failure of the product to perform as specified. For these reasons, we advise all Yamaha product owners that all service required should be performed by an authorized Yamaha Retailer or the appointed service representative.

IMPORTANT: This presentation or sale of this manual to any individual or firm does not constitute authorization certification, recognition of any applicable technical capabilities, or establish a principal-agent relationship of any form.

The data provided is believed to be accurate and applicable to the unit(s) indicated on the cover. The research engineering, and service departments of Yamaha are continually striving to improve Yamaha products. Modifications are, therefore, inevitable and changes in specification are subject to change without notice or obligation to retrofit. Should any discrepancy appear to exist, please contact the distributor's Service Division.

WARNING: Static discharges can destroy expensive components. Discharge any static electricity your body may have accumulated by grounding yourself to the ground bus in the unit (heavy gauge black wires connect to this bus.)

IMPORTANT: Turn the unit OFF during disassembly and parts replacement. Recheck all work before you apply power to the unit.

WARNING: This product contains chemicals known to the State of California to cause cancer, or birth defects or other reproductive harm.

DO NOT PLACE SOLDER, ELECTRICAL/ELECTRONIC OR PLASTIC COMPONENTS IN YOUR MOUTH FOR ANY REASON WHAT SO EVER!

Avoid prolonged, unprotected contact between solder and your skin! When soldering, do not inhale solder fumes or expose eyes to solder/ flux vapor!

If you come in contact with solder or components located inside the enclosure of this product, wash your hands before handling food.

IMPORTANT NOTICE FOR THE UNITED KINGDOM
Connecting the Plug and Cord

IMPORTANT: The wires in this mains lead are coloured in accordance with the following code:

BLUE : NEUTRAL
BROWN : LIVE

As the colours of the wires in the mains lead of this apparatus may not correspond with the coloured makings identifying the terminals in your plug proceed as follows:
The wire which is coloured BLUE must be connected to the terminal which is marked with the letter N or coloured BLACK.
The wire which is coloured BROWN must be connected to the terminal which is marked with the letter L or coloured RED.
Making sure that neither core is connected to the earth terminal of the three pin plug.

• This applies only products distributed by Yamaha-Kemble music (U.K.) Ltd. (2 wires)

■ WARNING

Components having special characteristics are marked ⚠ and must be replaced with parts having specification equal to those originally installed.

■ SAVING DATA

Saving and backing up your data

Some data items are automatically saved as backup data in the internal memory even if you turn the power off.
Saved data may be lost due to malfunction or incorrect operation. Save important data to a USB storage device/or other external device such as a computer.

■ SPECIFICATIONS

Product Name			Digital Piano
Size/Weight	Dimensions (W x D x H)		1,397 x 445 x 146 mm (55” x 17-1/2” x 5-3/4”) with keyboard stand: 1,399 x 445 x 761 mm (55-1/16” x 17-1/2” x 29-15/16”)
	Weight		21kg (46 lbs. 5 oz.) with keyboard stand: 28kg (61 lbs. 12 oz.)
Control Interface	Keyboard	Number of Keys	88
		Type	GHS (Graded Hammer Standard) keyboard
		Touch Response	Soft, Medium, Hard, Fixed
	Other Controllers	Pitch Bend Wheel	Yes
	Display	Type	Full Dot LCD
		Size	320 x 240 dots
		Color	Monochrome
		Contrast	Yes
		Score Display Function	Yes
		Lyrics Display Function	Yes
		Language	English
	Panel	Language	English
Voices	Tone Generation	Piano Sound	Pure CF Sound Engine
		Damper Resonance	Yes
	Polyphony	Number of Polyphony (max.)	192
	Preset	Number of Voices	151 + 15 Drum/SFX Kits + 388 XGlite
		Featured Voices	1 Natural! Voice, 10 Live! Voices, 11 Sweet! Voices, 7 Cool! Voices
	Compatibility		GM, XGlite
Effects	Types	Reverb	41 types
		Chorus	44 types
		DSP	237 types
		Master EQ	5 types
		Harmony	26 types
		Intelligent Acoustic Control (IAC)	Yes
	Mic Effects		Noise Gate, Compressor, 3 Band EQ
	Functions	Dual	Yes
		Split	Yes
		Panel Sustain	Yes (Function Menu)
Styles	Preset	Number of Styles	205
		Fingering	Multi Finger, Full Keyboard, AI Fingered
		Style Control	INTRO, MAIN x 2, FILL-IN x 2, ENDING
	Other Features	Music Database	320
		One Touch Setting (OTS)	Yes
		Style Recommender	Yes
		Smart Chord	Yes
	Compatibility		Style File Format (SFF), Style File Format GE (SFF GE)
Songs (MIDI)	Preset	Number of Preset Songs	100
	Recording	Number of Songs	5
		Number of Tracks	6 (5 Melody + 1 Chord)
		Data Capacity	Approx. 30,000 notes for 1 user song
	Compatible Data Format	Playback	SMF (Format 0, Format 1), XF
		Recording	SMF (Format 0)
USB Audio Recorder/Player	Recording Time (max.)		80 minutes/Song
	Data Format	Playback	WAV (44.1 kHz, 16 bit, stereo)
		Recording	WAV (44.1 kHz, 16 bit, stereo)
Functions	Registration Memory	Number of Buttons	4 (x 8 banks)
	Lesson	Yamaha Education Suite (Y.E.S.)	Waiting, Your tempo, Minus one, Repeat & Learn, Chord Dictionary
	Demo		Yes
	Overall Controls	Metronome	Yes
		Tempo	5 - 280
		Transpose	-12 to 0, 0 to +12
		Tuning	415.3 – 440.0 – 466.2 Hz
	Miscellaneous	Piano Room	Yes

Storage and Connectivity	Storage	Internal Memory	Approx. 1.7 MB
		External Drives	USB flash drive
	Connectivity	DC IN	12V
		Headphones/Output	x 1 (Standard stereo phone jack)
		Microphone	Yes (Standard phone jack)
		Sustain Pedal	Yes
		AUX IN	Yes (Stereo mini jack)
		PEDAL UNIT	Yes
		USB TO DEVICE	Yes
		USB TO HOST	Yes
Amplifiers/ Speakers	Amplifiers		6W x 2
	Speakers		12cm x 2 + 5cm x 2
Power Supply	Adaptor		PA-150 or the equivalent
	Power Consumption		13W
	Auto Power Off		Yes
Included Accessories			• Owner's Manual • Data List • Keyboard Stand • Footswitch • Music Rest • AC Power Adaptor (PA-150 or an equivalent recommended by Yamaha) *1 • Warranty *1 • Online Member Product Registration *2 *1: May not be included depending on your area. Check with your Yamaha dealer. *2: The PRODUCT ID on the sheet will be needed when you fill out the User Registration form.
Separately Sold Accessories (May not be available depending on your area.)			• AC Power Adaptor: PA-150 or an equivalent recommended by Yamaha • Headphones: HPH-50/HPH-100/HPH-150 • Pedal Unit: LP-7A/LP-7AWH • Foot Pedal: FC3A • Footswitch: FC4A/FC5 • USB wireless LAN adaptor: UD-WL01 • Wireless MIDI Adaptor: UD-BT01

* The contents of this manual apply to the latest specifications as of the printing date. To obtain the latest manual, access the Yamaha website then download the manual file. Since specifications, equipment or separately sold accessories may not be the same in every locale, please check with your Yamaha dealer.

■ PANEL LAYOUT

Front Panel

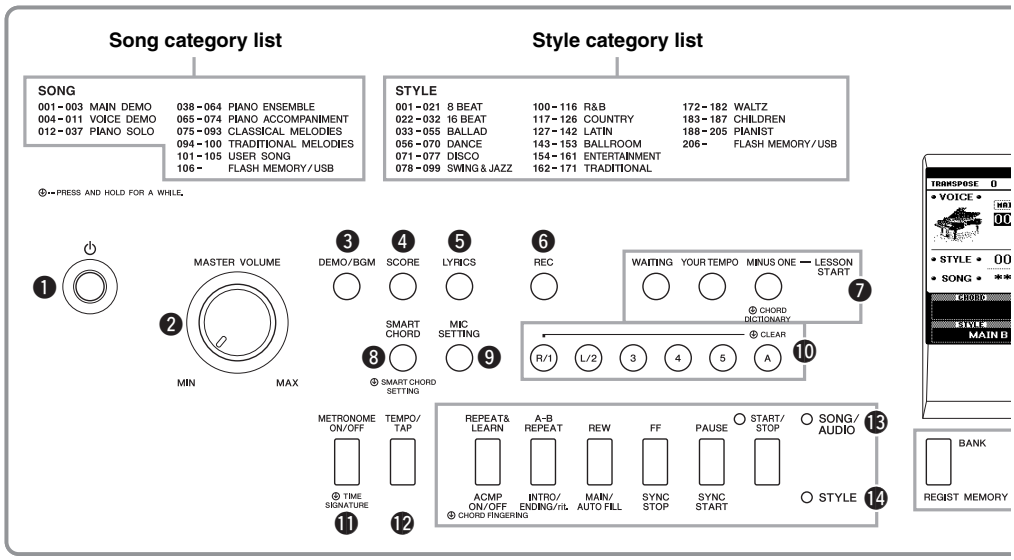

Front Panel

❶ **[⏻] (Standby/On) switch**
❷ **[MASTER VOLUME] control**
❸ **[DEMO/BGM] button**
❹ **[SCORE] button**
❺ **[LYRICS] button**
❻ **[REC] button**
❼ **LESSON START**
[WAITING] button
[YOUR TEMPO] button
[MINUS ONE] button
❽ **[SMART CHORD] button**
❾ **[MIC SETTING] button**
❿ **Song Track**
[1]–[5], [A] buttons
Lesson
[R] and [L] buttons
⓫ **[METRONOME ON/OFF] button**
⓬ **[TEMPO/TAP] button**
⓭ **SONG/AUDIO**
[REPEAT&LEARN] button
[A-B REPEAT] button
[REW] button
[FF] button
[PAUSE] button
[START/STOP] button
⓮ **STYLE**
[ACMP ON/OFF] button
[INTRO/ENDING/rit.] button
[MAIN/AUTO FILL] button
[SYNC STOP] button
[SYNC START] button
[START/STOP] button
⓯ **REGIST MEMORY**
[BANK], [1]–[4] buttons
⓰ **CATEGORY [◀◀] and [▶▶] buttons**
⓱ **[EXIT] button**
⓲ **[EXECUTE] button**
⓳ **DATA ENTRY**
Dial, Number buttons [0]–[9], [+] and [-] buttons
⓴ **[FILE CONTROL] button**
㉑ **[FUNCTION] button**
㉒ **[PIANO ROOM] button**
㉓ **[SONG/AUDIO] button**
㉔ **[STYLE] button**
㉕ **[VOICE] button**
㉖ **[MUSIC DATABASE] button**
㉗ **[SPLIT ON/OFF] button**
㉘ **[DUAL ON/OFF] button**
㉙ **[HARMONY ON/OFF] button**
㉚ **[PITCH BEND] wheel**
㉛ **USB TO DEVICE terminal**

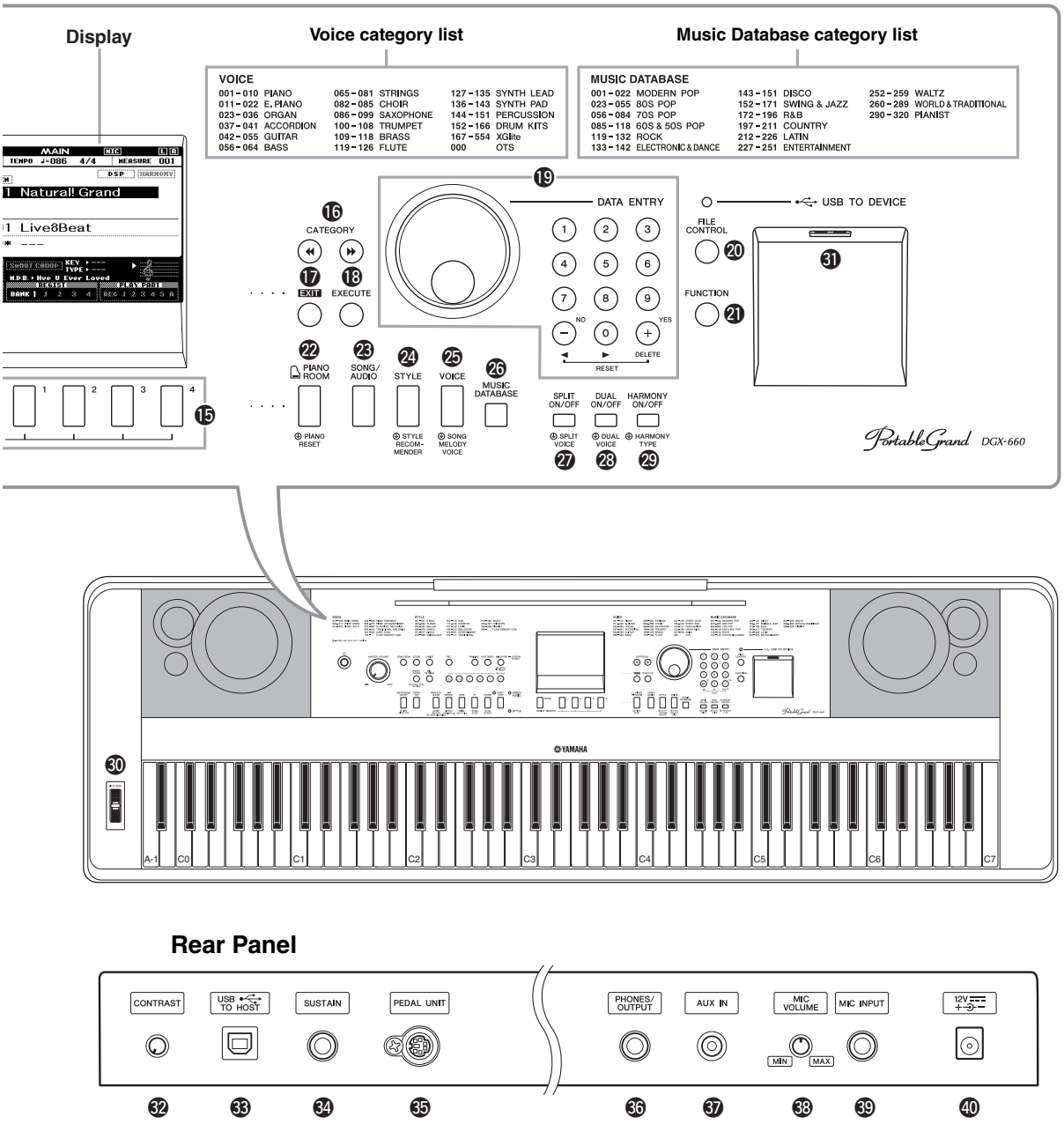

Rear Panel

Rear Panel

- **CONTRAST knob**
- **USB TO HOST terminal**
- **SUSTAIN jack**
- **PEDAL UNIT jack**
- **PHONES/OUTPUT jack**
- **AUX IN jack**
- **MIC VOLUME knob**
- **MIC INPUT jack**
- **DC IN jack**

"Press & Hold" symbol

By holding down one of the buttons having this symbol, you can call up an alternate function, other than the one called up when simply pressing.

■ CIRCUIT BOARD LAYOUT&WIRING

• Upper case < Bottom view >

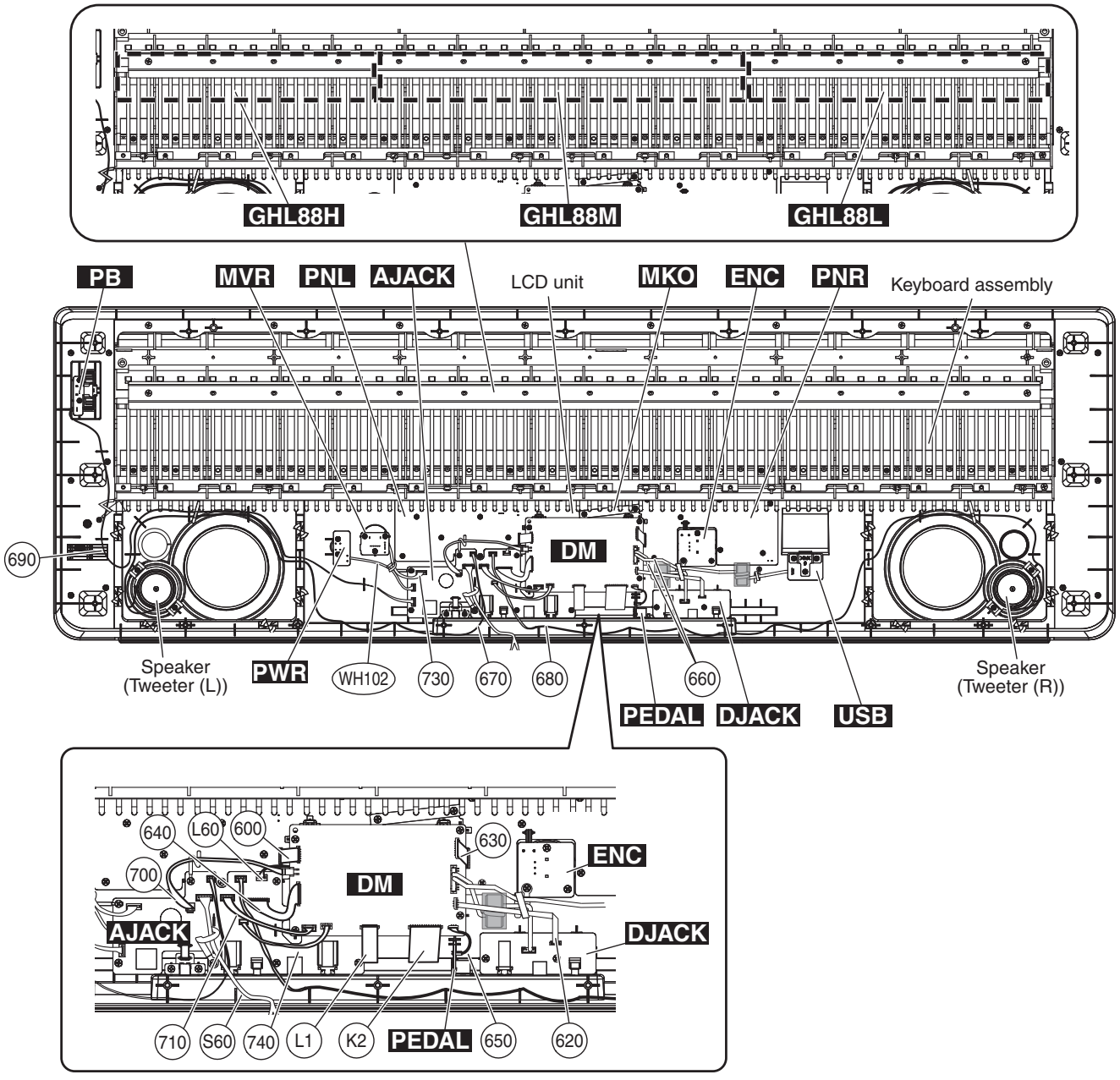

• Bottom board

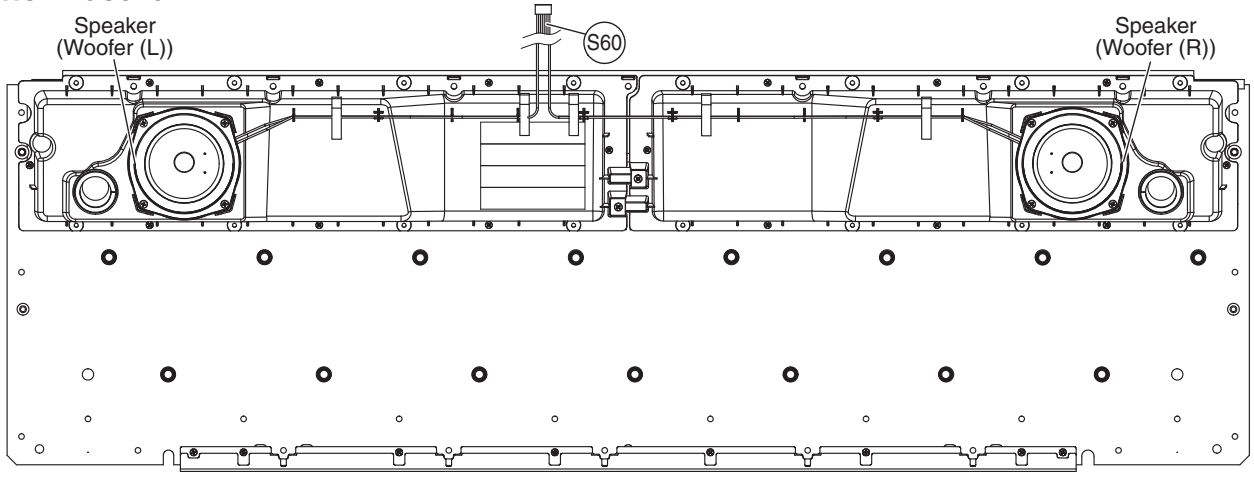

Location	Parts No.	Connector Assembly	Destination		Remarks
K2	MFA27350	FLEXIBLE FLAT CABLE	GHL88M-CN2	DM-CN001	Already connected to GHL88M 27P L=350mm
600	ZF629300	FLEXIBLE FLAT CABLE	DM-CN005	PNL-CN1	12P L=80mm
630	ZF629400	FLEXIBLE FLAT CABLE	DM-CN006	PNR-CN2	15P L=90mm
650	ZF508900	FFC ASSEMBLY PDN	DM-CN007	PEDAL-CN701	6P L=90mm
640	ZF629600	FLEXIBLE FLAT CABLE	DM-CN008	AJACK-CN402	18P L=90mm
620	ZS193600	FFC ASSEMBLY DJK	DM-CN009	DJACK-CN410	7P L=130mm
700	(ZF51010)*	CONNECTOR ASSEMBLY PWR	DM-CN013	AJACK-CN422	2P L=130mm
710	(ZF51020)*	CONNECTOR ASSEMBLY SPB	DM-CN012	AJACK-CN415	4P L=140mm
S60	(ZF51030)*	CONNECTOR ASSEMBLY SPA	AJACK-CN418	Woofer	4P L=600/760mm
670	(ZF51040)*	CONNECTOR ASSEMBLY TWL	AJACK-CN419	Tweeter(L)	2P L=800mm
680	(ZF51050)*	CONNECTOR ASSEMBLY TWR	AJACK-CN420	Tweeter(R)	3P L=1070mm
WH102	(ZF51060)*	WIRING ASSEMBLY SSW	AJACK-CN101	PWR-CN903	Already connected to PWR 2P L=150mm *1
730	(ZF51070)*	WIRING ASSEMBLY MVR	AJACK-CN403	MVR-CN902	4P L=95mm *1
690	(ZF51080)*	WIRING ASSEMBLY PTB	AJACK-CN103	PB-CN401	3P L=755mm *1
660	(ZU44480)*	CONNECTOR ASSEMBLY USB	DM-CN10	DJACK-CN409	10P-5P L=130mm
				USB-CN411	10P-5P L=240mm
L60	(WB09210)*	WIRING ASSEMBLY BL	LCD ASSEMBLY-60	AJACK-CN423	*1
L1	WU967500	LCD UNIT	LCD ASSEMBLY-10	DM-CN002	FFC cable has installed to LCD unit.
740	(ZS20280)*	CONNECTOR ASSEMBLY MIC	DM-CN105	AJACK-CN601	3P L=140mm

The parts with "( )" in "Part No." are not available as service parts.

*1 Edge mark is adjusted to Pin 1 mark (△ mark).

■ BLOCK DIAGRAM

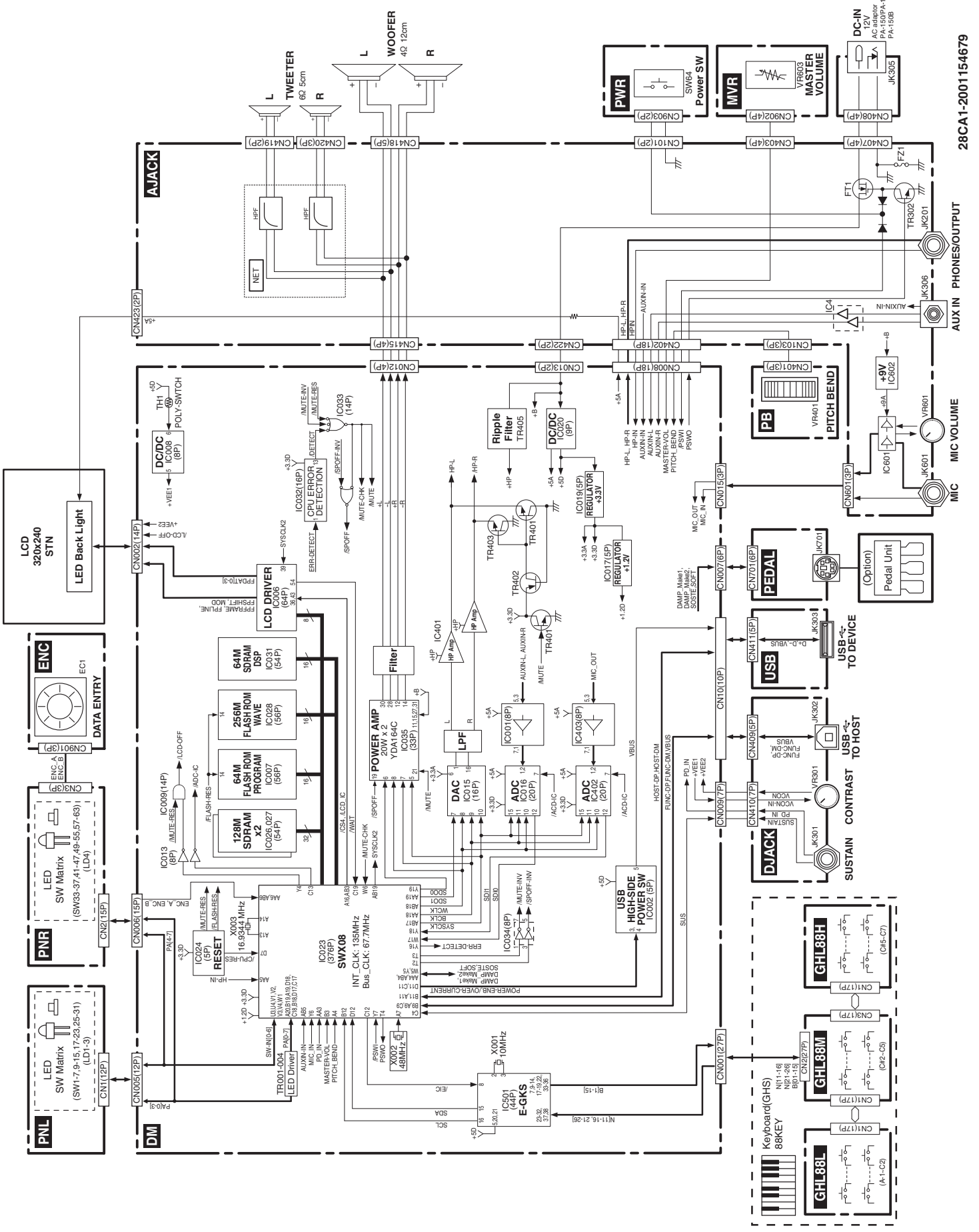

■ DISASSEMBLY PROCEDURE

CAUTION:

1) Flat cable's contacts are visible from the back. Pay attention not to insert and install the cable to the connector inversely.

2) Be sure to attach the removed filament tape just as it was before removal.



Front Side (Printed Side)



Back side

1. Bottom Board Assembly (Time required: About 8 minutes)

1-1 Remove the five (5) screws marked [940A]. The lower case F can then be removed. (Fig.1)

1-2 Remove the four (4) screws marked [940B] and the guide screw marked [950A]. The lower case L can then be removed. (Fig.1)

1-3 Remove the four (4) screws marked [940C] and the guide screw marked [950B]. The lower case R can then be removed. (Fig.1)

1-4 Remove the thirty (30) screws marked [940D]. The bottom board assembly can then be separated from the upper case assembly. (Fig.1)

* *When the lower case L is assembled, tighten the screws marked [940B] in the order of 1, 2, 3 and 4. (Fig.1)*

* *When the lower case R is assembled, tighten the screws marked [940C] in the order of 1, 2, 3 and 4. (Fig.1)*

< Bottom view >

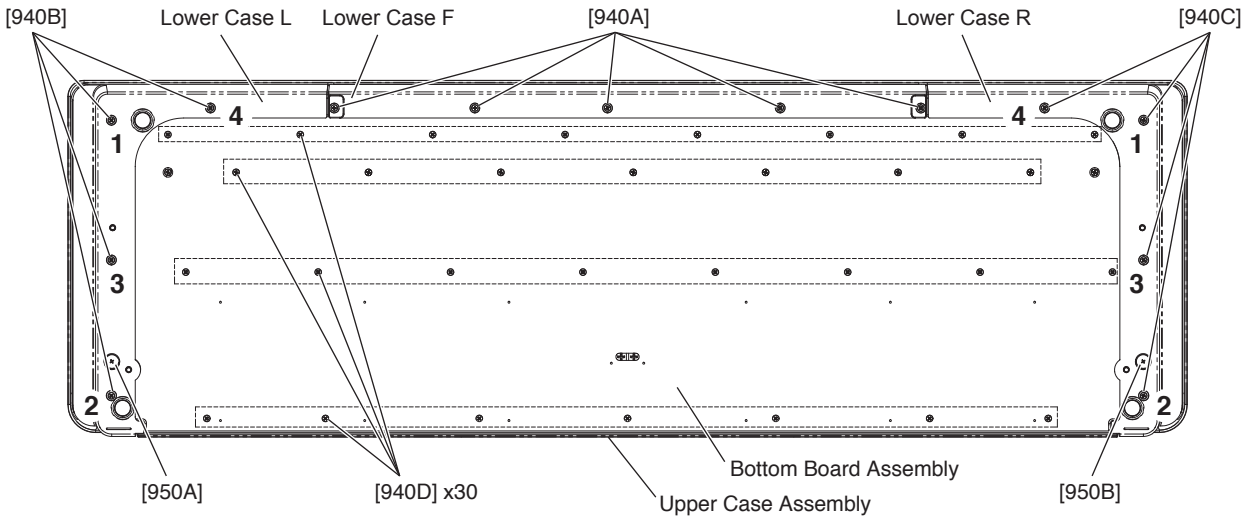

1 - 4 : The order of the screw tightening

Fig.1

2. Circuit Boards and Assemblies (Upper Case Part) (Time required: About 9 minutes)

2-1 Separate the upper case assembly from the bottom board assembly. (See procedure 1.)

2-2 After removing the upper case assembly, remove the following screws. Each circuit board and assembly can then be removed. (Fig.2)(Table 1)

CAUTION:

When flipping over the upper case assembly, place cushions at the under of the key blocks (on the left and right) to support it (so that there is no stress on the wheel assembly).

< Bottom view >

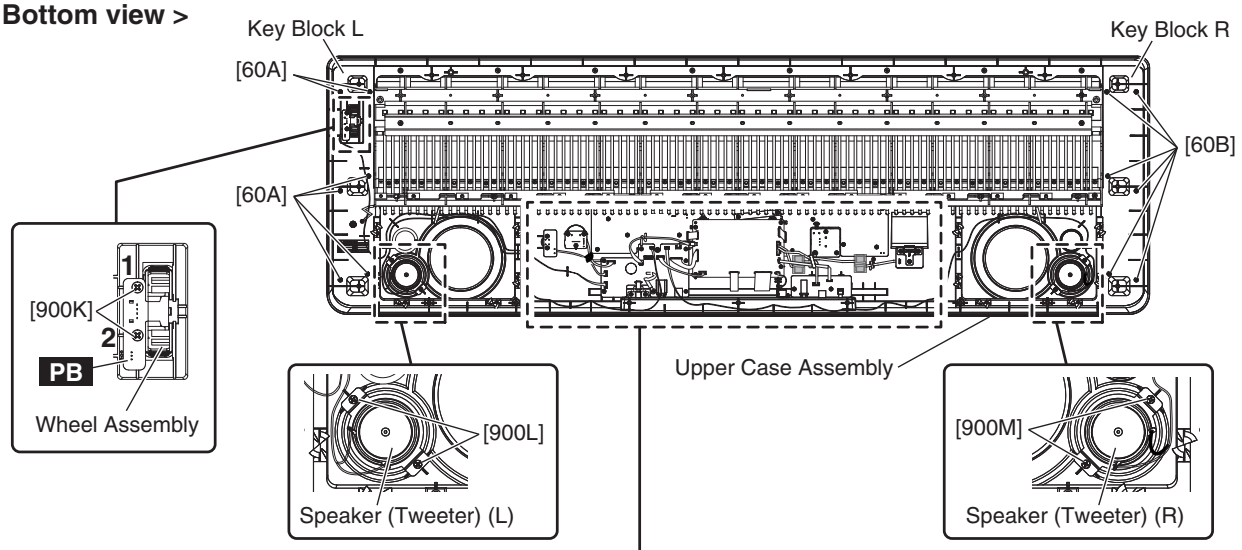

< Bottom view >

1 - 2 : The order of the screw tightening

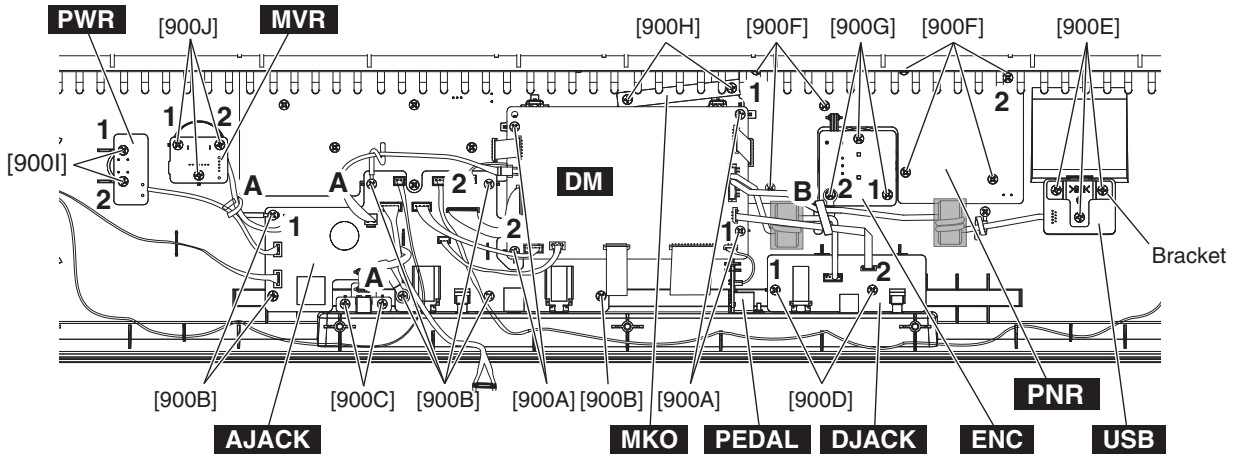

< Rear view >

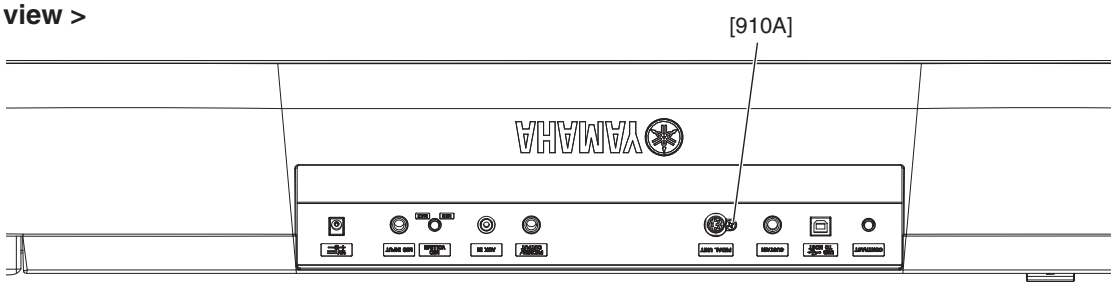

Fig.2

Circuit Board and Assembly	Screw Ref.No. / Part Name	QTY	Fig.
DM Circuit Board	900A (*1)	4	2
AJACK Circuit Board	900B (*1) (*2)	7	2
	900C	2	2
DJACK Circuit Board	900D (*1)	2	2
USB Circuit Board	900E (*4)	3	2
PNR Circuit Board & (*3)	900F (*1)	7	2
ENC Circuit Board	900G (*1) (*6)	3	2
	Encoder Knob (*8)	1	2-3
MKO Circuit Board (*5)	900H	2	2
PWR Circuit Board	900I (*1)	2	2
	Push Knob (*7)	1	2-2
MVR Circuit Board	900J (*1)	3	2
	Volume Knob (*9)	1	2-4
PB Circuit Board Wheel Assembly	900K (*1)	2	2
Speaker (Tweeter) (L)	900L	2	2
Speaker (Tweeter) (R)	900M	2	2
PEDAL Circuit Board	910A	1	2
Key Block L	60A	6	2
Key Block R	60B	6	2

*1 When assembling it, tighten the screw marked 1, 2 and other screws in this order. (Fig.2)
*2 As for the screw at the location of A, it is thghtened together with a cord holder. (Fig.2)
*3 The PNR and the ENC circuit boards are connected with a board-in connector. (Fig.2)
*4 As for the three (3) screws, they are tightened together with a bracket. (Fig.2)
*5 The MKO circuit board is used as a flat cable holder. (Fig.2)
*6 As for the screw at the location of B, it is thghtened together with a cord holder. (Fig.2)
*7 Push Knob (See Fig.2-2.)
*8 Encoder Knob (See Fig.2-3.)
*9 Volume Knob (See Fig.2-4.)

Table 1

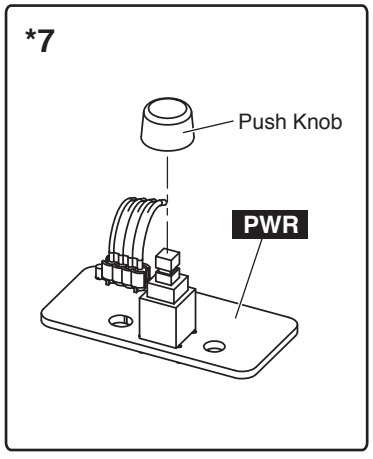

Fig.2-2

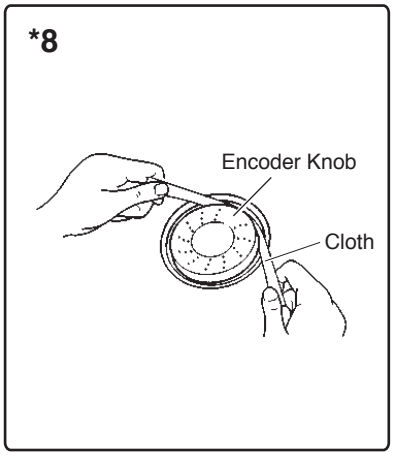

Fig.2-3

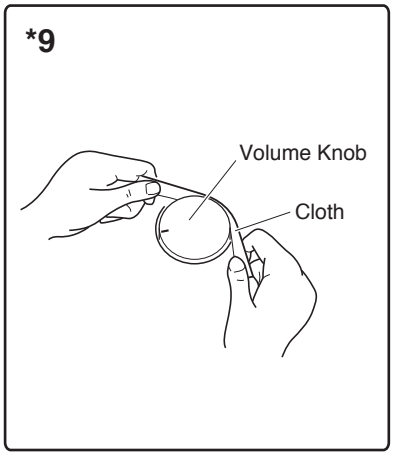

Fig.2-4

3. LCD Assembly (Time required: About 10 minutes)

3-1 Separate the upper case assembly from the bottom board assembly. (See procedure 1.)

3-2 Remove the DM circuit board. (See procedure 2.)

3-3 Remove the four (4) screws marked [900N]. The LCD assembly can then be removed. (Fig.3)

* ***When the LCD assembly is assembled, tighten the screws marked [900N] in the order of 1, 2 at the condition that pushed it to the keyboard side. (Fig.3)***

4. PNL Circuit Board (Time required: About 10 minutes)

4-1 Separate the upper case assembly from the bottom board assembly. (See procedure 1.)

4-2 Remove the MKO circuit board. (See procedure 2.)

4-3 Separate the GHL keyboard assembly from the upper case assembly. (See procedure 6.)

4-4 Remove the twelve (12) screws marked [900O]. The PNL circuit board can then be removed. (Fig.4)

* ***When the PNL circuit board is assembled, tighten the screws marked [900O] in the order of 1, 2 and the remaining screws. (Fig.4)***

< Bottom view >

1 - 2 : The order of the screw tightening

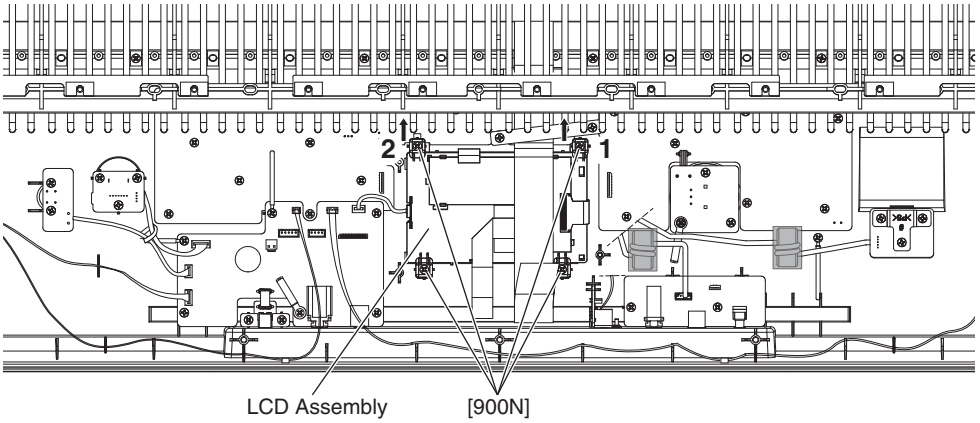

Fig.3

< Bottom view >

1 - 2 : The order of the screw tightening

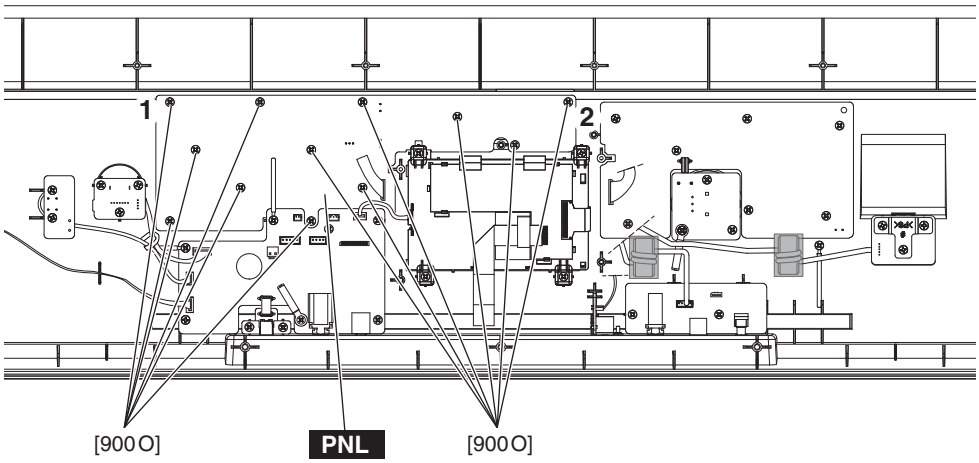

Fig.4

5. Speaker (Woofer) (Time required: About 8 minutes)

5-1 Separate the bottom board assembly from the upper case assembly. (See procedure 1.)

5-2 Remove the four (4) screws marked [100]. The speaker (woofer) can then be removed. (Fig.5)

* ***The woofers L and R can be removed in the same manner.***

6. GHL Keyboard Assembly (Time required: About 12 minutes)

6-1 Separate the upper case assembly from the bottom board assembly. (See procedure 1.)

6-2 Remove the MKO circuit board (holder). (See procedure 2.)

6-3 Remove the eight (8) screws marked [930A] and the eight (8) screws marked [920]. The GHL keyboard assembly can then be removed from the upper case assembly. (Fig.6)

6-4 When the GHL keyboard assembly is exchanged (not only removing), remove the two (2) screws marked [930B]. The reinforcing plate can then be removed from the GHL keyboard assembly. (Fig.6)

* ***When the reinforcing plate is assembled, tighten the screws marked [930B] in the order of 1 and 2. (Fig.6)***

* ***When the GHL keyboard assembly is assembled, tighten the screws marked [930A] in the order of 1, 2, 3 and the remaining screws. (Fig.6)***

< Top view >

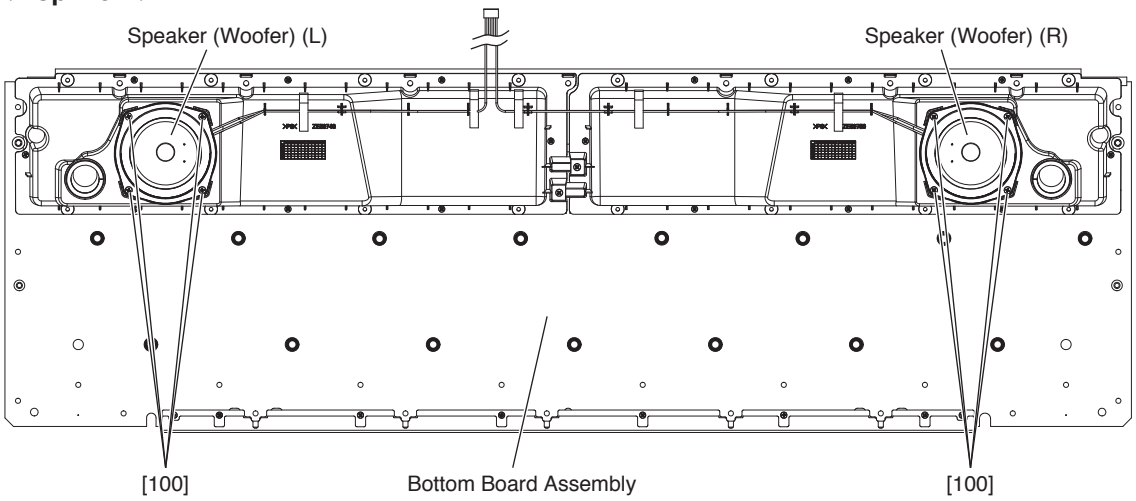

Fig.5

< Bottom view >

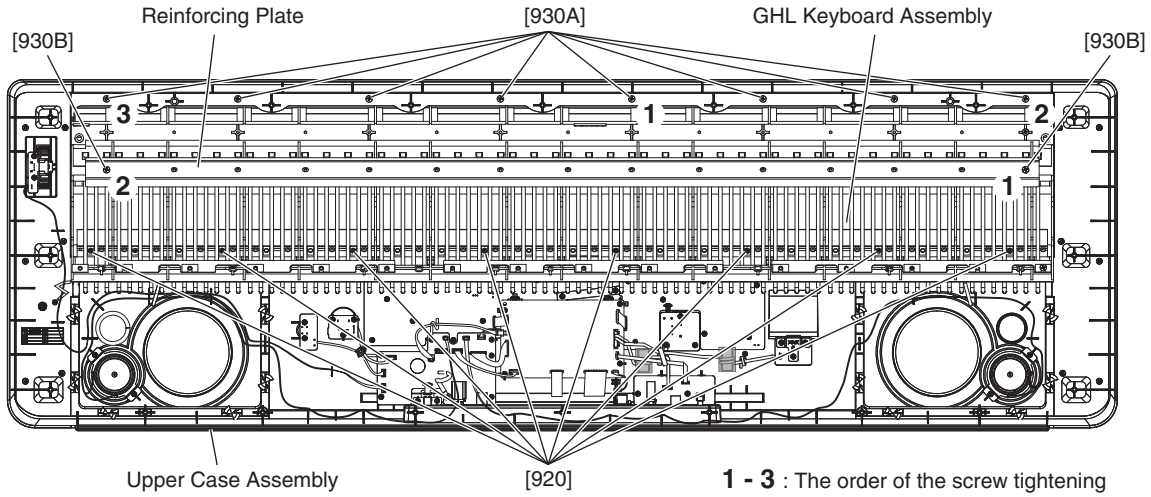

Fig.6

7. Disassembling the Keyboard Assembly

7-1 White key assembly and black key assembly

Remove the four (4) screws marked [270A] fixing a black key assembly and two (2) white key assemblies for one octave (C-B).

To remove the black and white key assemblies for one octave, grip and lift the both end lugs of white key, and then slide the black and white key assemblies toward you. (Fig.7, Fig.8)

7-2 When removing white keys numbered as A-1 and B-1 key and black key numbered as A#-1, remove two (2) screws marked [270B] and then lift the back of the keys and slide the black and white keys towards you. (Fig.7)

7-3 When removing the C7 key, remove a screw marked [270C] and then lift the back of C7 key and slide it towards you. (Fig.7)

* ***When removing white key assembly and black key assembly, be careful not to allow grease to attach to the circuit board and rubber contacts, etc. (Fig.8)***

< Top View >

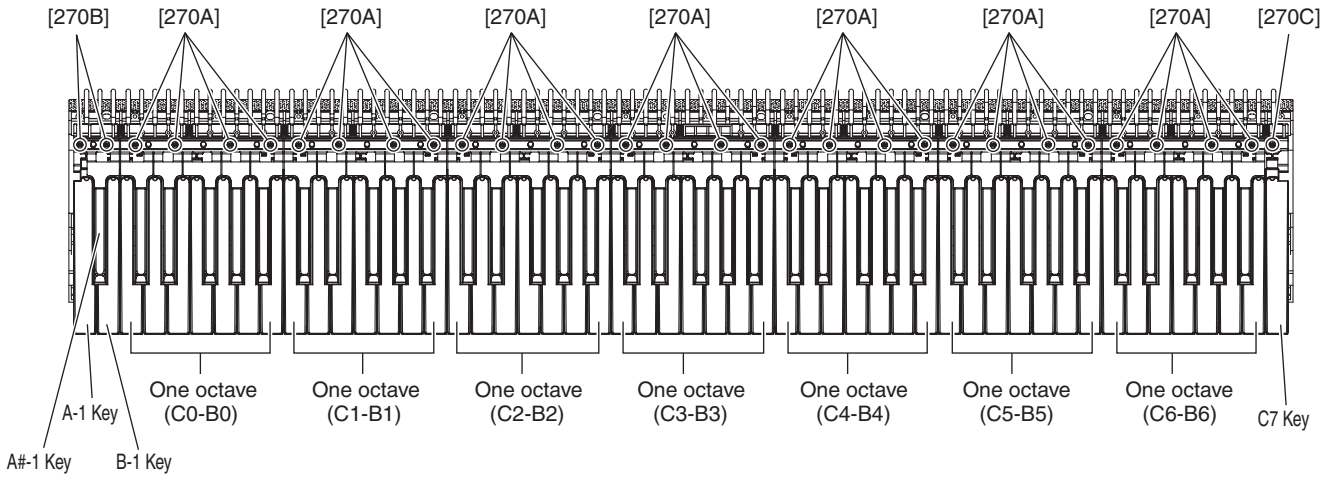

Fig.7

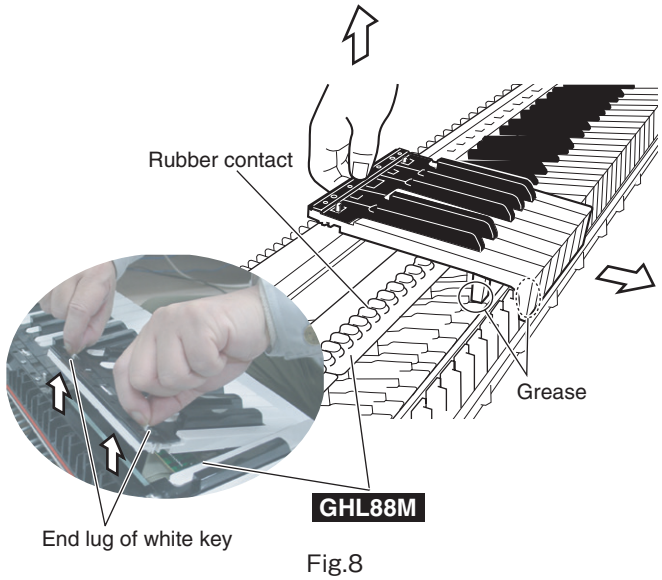

Fig.8

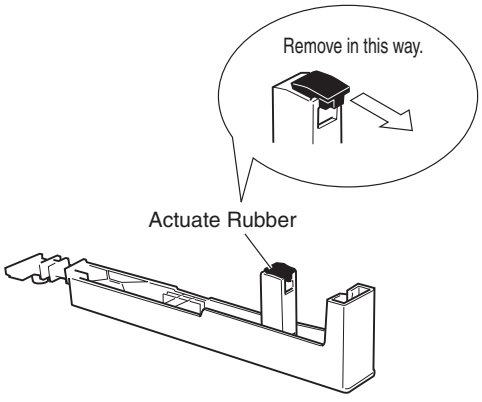

Fig.9

< Top View >

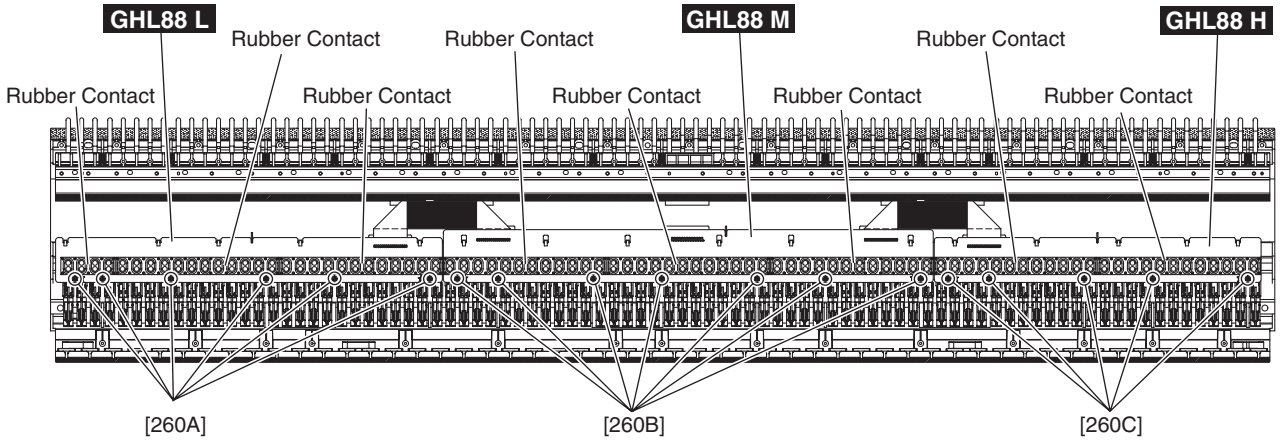

Fig.10

7-4 Actuate Rubber

Remove the actuate rubber. (Fig.9)

Notes: Note that the rubber contact has a specific installation direction.

One rubber contact fits for C#-C (for C-B keys).

7-5 Rubber Contact

Remove the black and white key assembly for two octaves related to the subject rubber contact.The rubber contact can then be removed. (Fig.10, Fig.11)

7-6 GHL88L Circuit Board

Remove the black and white key assembly (A-1-B2). (See procedure 7-1.)

Remove the six (6) screws marked [260A]. The GHL88L circuit board can then be removed. (Fig.10)

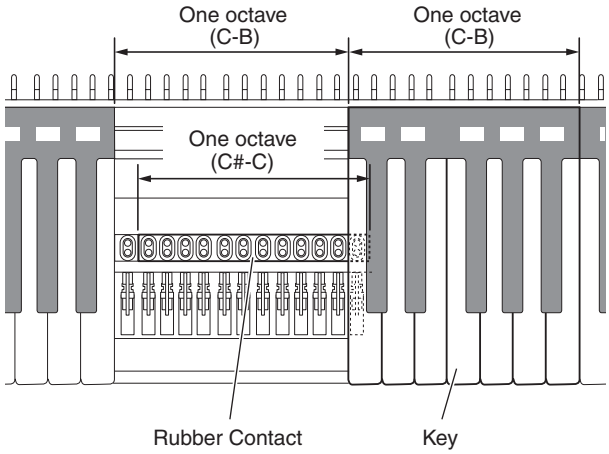

To remove the rubber contact for one octave, keys for 2 octaves need to be removed.

Fig.11

< Top View>

< Side View >

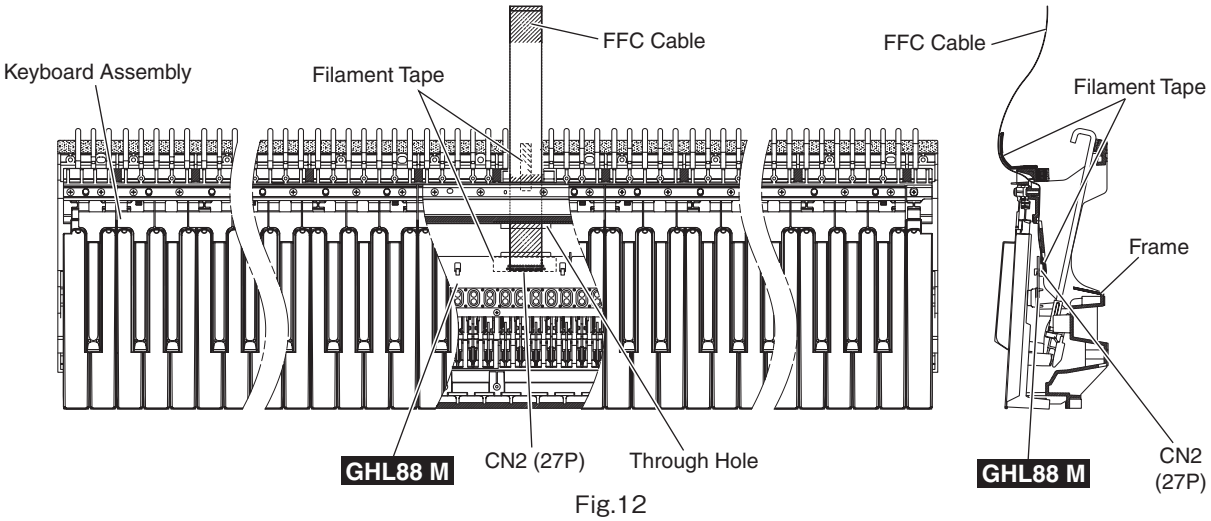

Fig.12

7-7 GHL88M Circuit Board

Remove the black and white key assembly (C2-B5). (See procedure 7-1.)
Remove the seven (7) screws marked [260B]. The GHL88M circuit board can then be removed. (Fig.10)
Detach the filament tape and disconnect the FFC cable. (Fig.12)

7-8 GHL88H Circuit Board

Remove the black and white key assembly (C5-C7). (See procedure 7-1.)
Remove the five (5) screws marked [260C]. The GHL88H circuit board can then be removed. (Fig.10)

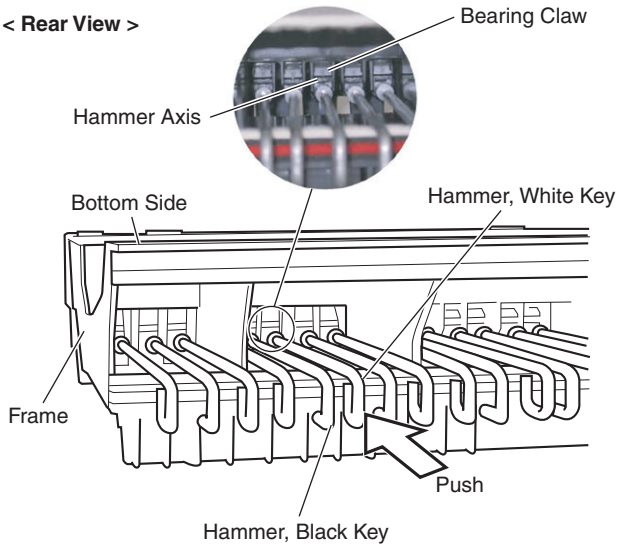

Fig.13

7-9 Hammer (White Key), (Black Key)

Remove the black and white key assembly for the related keys.
With the key frame placed upside down, push the hammer forward from the rear, then a click sound is heard and the hammer bearing section can be removed from the hammer axis of the key frame.
Take out the hammer sideways. (Fig.13, Fig.14)

Note: ***When removing the hammer, use care not to cause damage to the hammer bearing and its claw.***

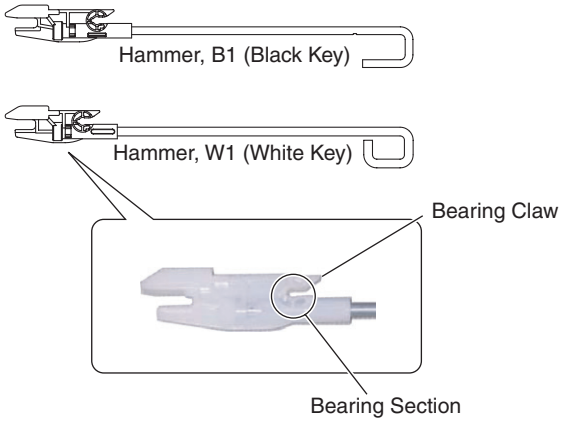

Fig.14

8. Assembling the Keyboard Assembly

8-1 Hammer (White Key), (Black Key)

After applying grease(G-1030Y) to the bearing section of the hammer, bring the hammer (white key)(black key) sideways from the rear, fit its bearing section to the hammer axis of the key frame and pull it forward until a click sound is heard. (Fig.15)

Note: ***There are 8 hammer types differing in weight. Be sure to check the type of the hammer for correct installation. (See Table 2)***

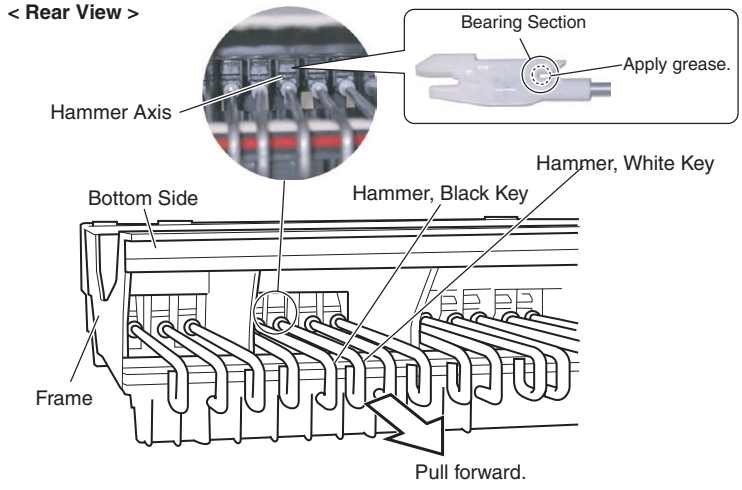

Fig.15

8-2 GHL88L Circuit Board

Tighten the six (6) screws marked [260A] to fix the GHL88L circuit boards. (Fig.10)

8-3 GHL88M Circuit Board

Connect the FFC cable to CN2 of the GHL88M circuit board, attach the filament tape. (Fig.12)
Pass the end of the cable into the through hole in the frame and pull it out from its outlet. (Fig.12)
Tighten the seven (7) screws marked [260B] to fix the GHL88M circuit board. (Fig.10)

Part Name		Range for Applicable Tone Keys
White Key	Hammer W1	A-1 – F1
	Hammer W2	G1 – E3
	Hammer W3	F3 – D5
	Hammer W4	E5 – C7
Black Key	Hammer B1	A#-1 – F#1
	Hammer B2	G#1 – D#3
	Hammer B3	F#3 – C#5
	Hammer B4	D#5 – A#6

Table.2

* *Method of processing FFC cable*
Pull the FFC cable not to touch to the key hammers by loosening of the cable under the circuit board, and fix the cable with the filament tape in such a state. (Photo1, Photo2) Then, wrap the cushion around the FFC cable.(Photo3) After you wrap the cushion around the FFC cable, do not put the filament tape directly to the cushion because it is too easy to peel it off. Therefore, put the filament tape directly to the FFC cable, not to the cushion. (Photo 4)



Photo.1

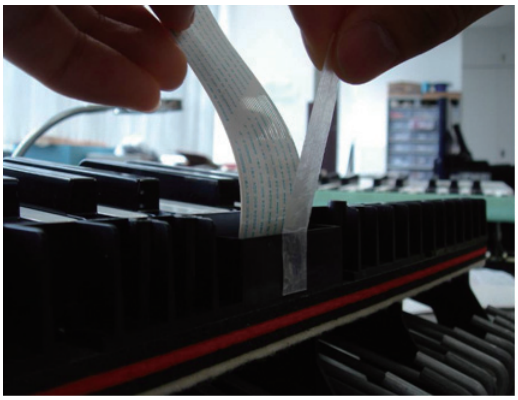

Photo.2

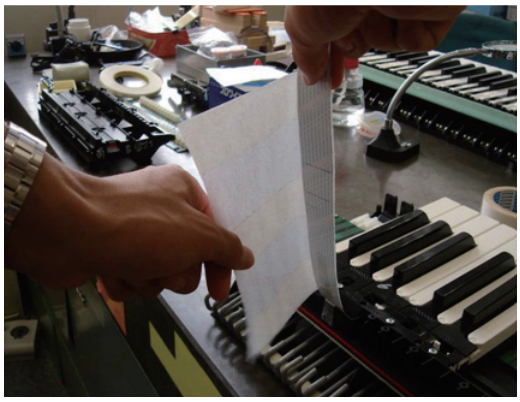

Photo.3

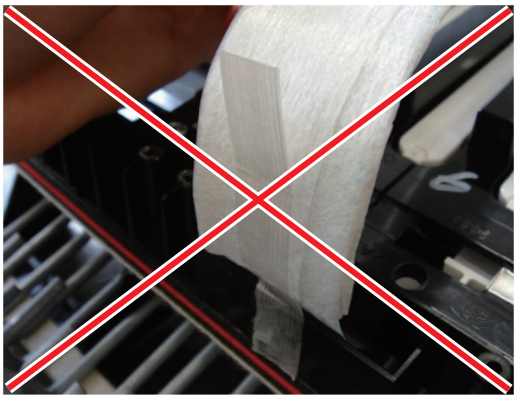

Photo.4

8-4 GHL88H Circuit Board

Tighten the five (5) screws marked [260C] to fix the GHL88H circuit board. (Fig.10)

8-5 Rubber Contact

Note that the rubber contact has s specific installation direction. Be careful not to install it in the wrong direction.

*Note: **A triangle mark (△) on the rubber contact must face the front. (Fig.16)***

To prevent looseness of the rubber contact, fit it securely in place using a clip or similar object. (Fig.17)

8-6 Actuate Rubber

After applying grease(G-1030Y) to top and bottom faces of the actuate rubber, fit it to the white key (black key). (Fig.18)

8-7 White key assembly and black key assembly

After applying grease to the key guide, install the white key assembly/black key assembly.

At this time, check to make sure that the key guide of the key frame and inside slit at the front of white key as well as the contact arm of the hammer and actuate rubber of the white key assembly/black key assembly are installed properly. (Fig.19)

Use the four (4) screws marked [270A] to fix 1 octave white key assembly/black key assembly. (Fig.7)

8-8 Use the two (2) screws marked [270B] to fix the A-1 to B-1 keys. (Fig.7)

8-9 Use a screw marked [270C] to fix the C7 key. (Fig.7)

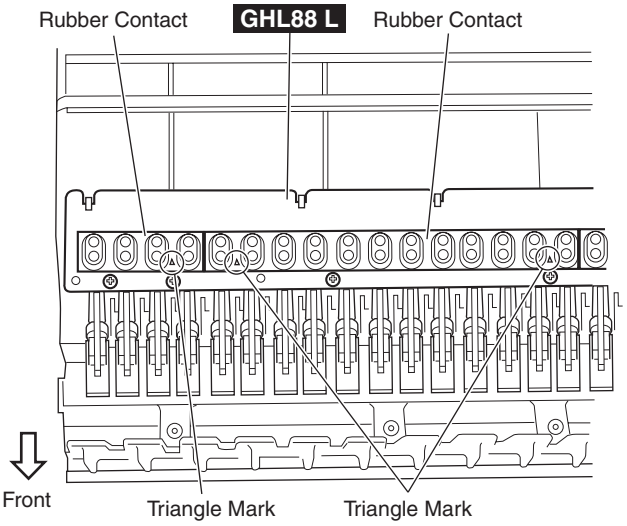

Fig.16

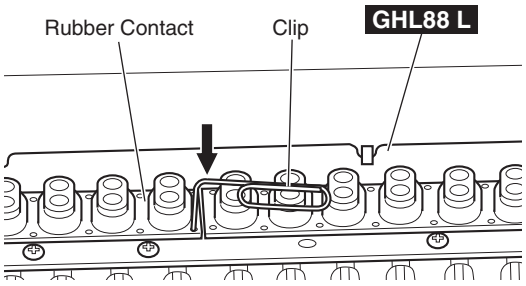

Fig.17

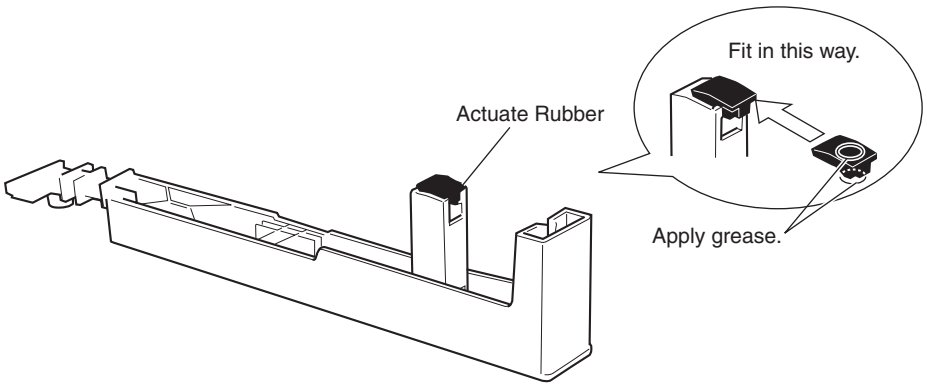

Fig.18

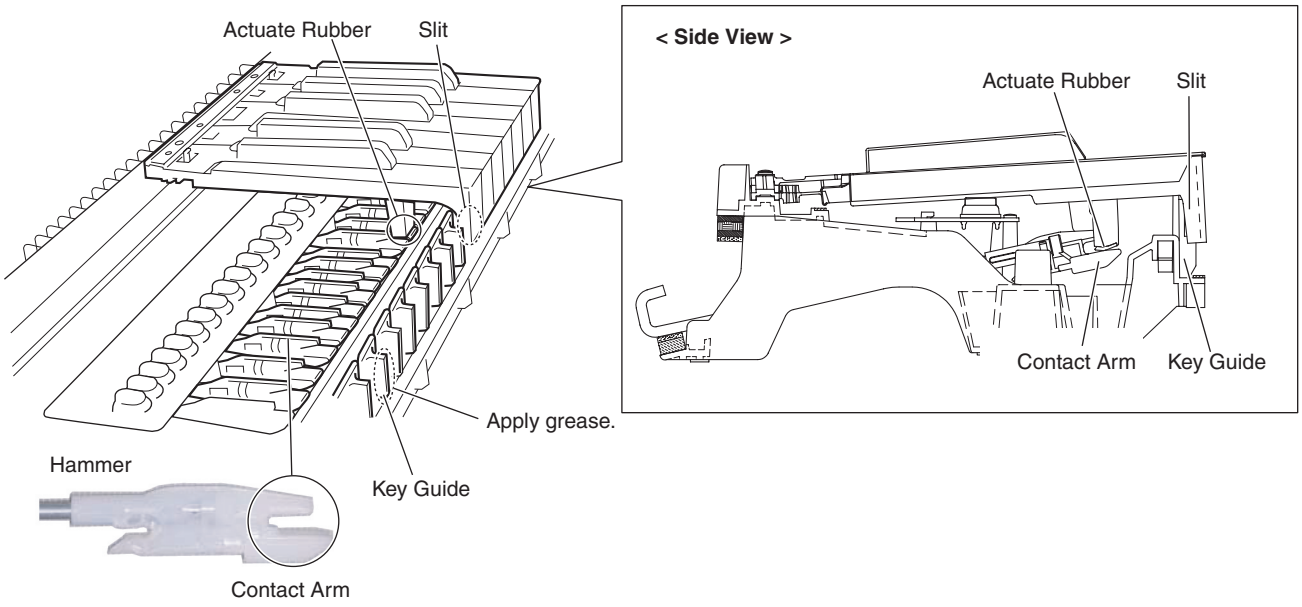
Actuate Rubber
Slit
Apply grease.
Key Guide
Hammer
Contact Arm
< Side View >
Actuate Rubber
Slit
Contact Arm
Key Guide

Fig.19

■ CIRCUIT BOARDS

CONTENTS

- AJACK Circuit Board (YH202C0) 24
- DJACK Circuit Board (YH202C0) 24
- DM Circuit Board (YH201C0) 23
- ENC Circuit Board (YE943C0) 25
- GHL88H Circuit Board (X6246D0) 28
- GHL88L Circuit Board (X6244D0) 29
- GHL88M Circuit Board (X6245G0) 30
- MKO Circuit Board (YE943C0) 25
- MVR Circuit Board (YE943C0) 25
- PB Circuit Board (YH202C0) 25
- PEDAL Circuit Board (YE943C0) 25
- PNL Circuit Board (YE943C0) 26
- PNR Circuit Board (YE943C0) 27
- PWR Circuit Board (YE943C0) 25
- USB Circuit Board (YH202C0) 24

Note: See parts list for details of circuit board component parts.

• DM Circuit Board

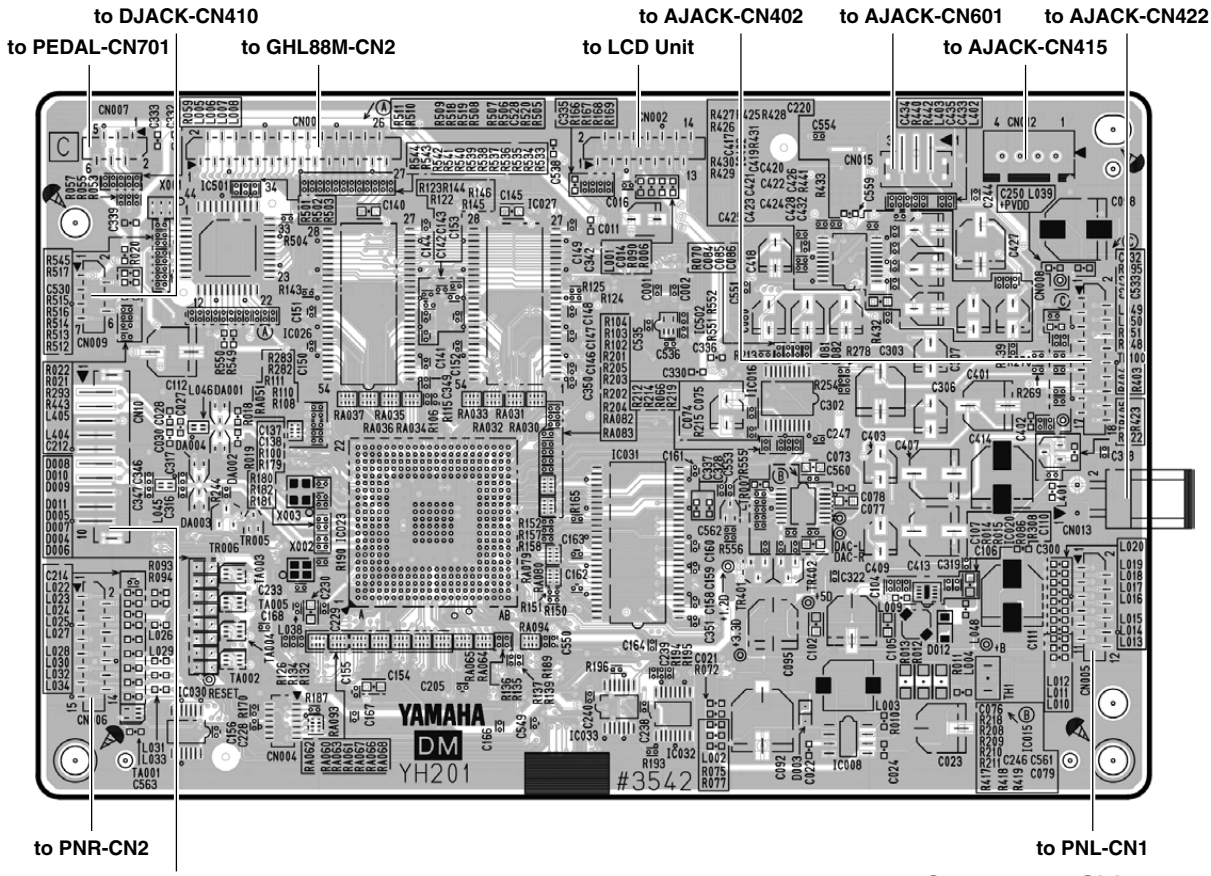

Component Side

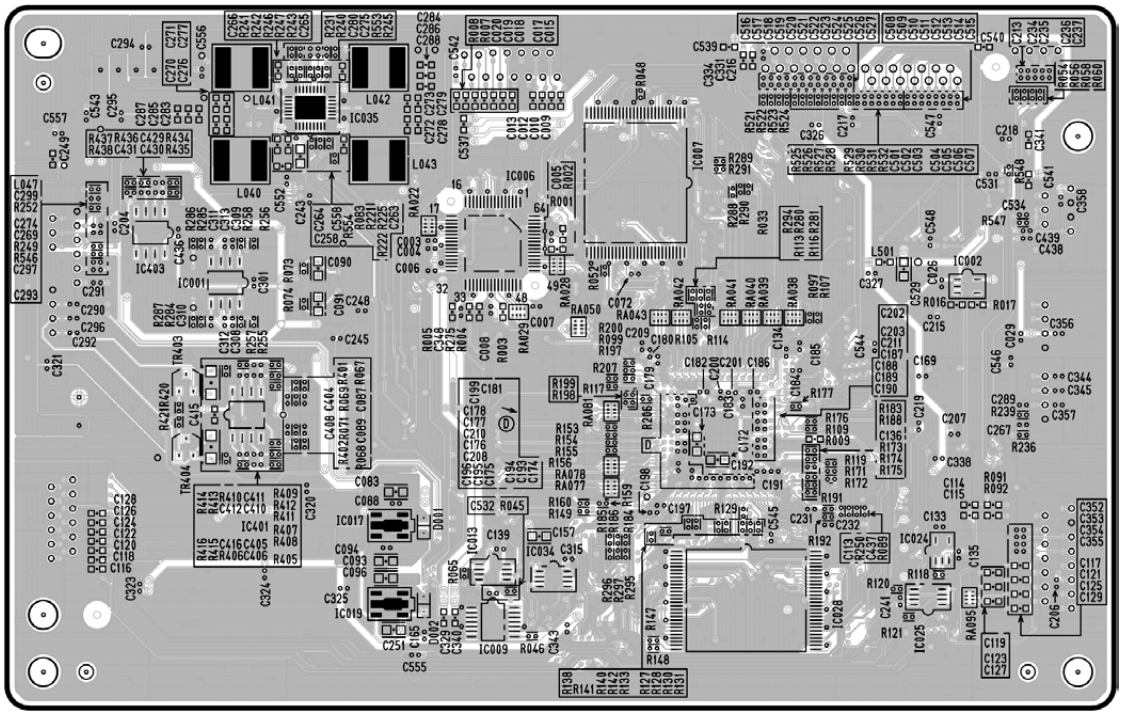

Pattern Side

2NA-ZT15330 1

• AJACK Circuit Board

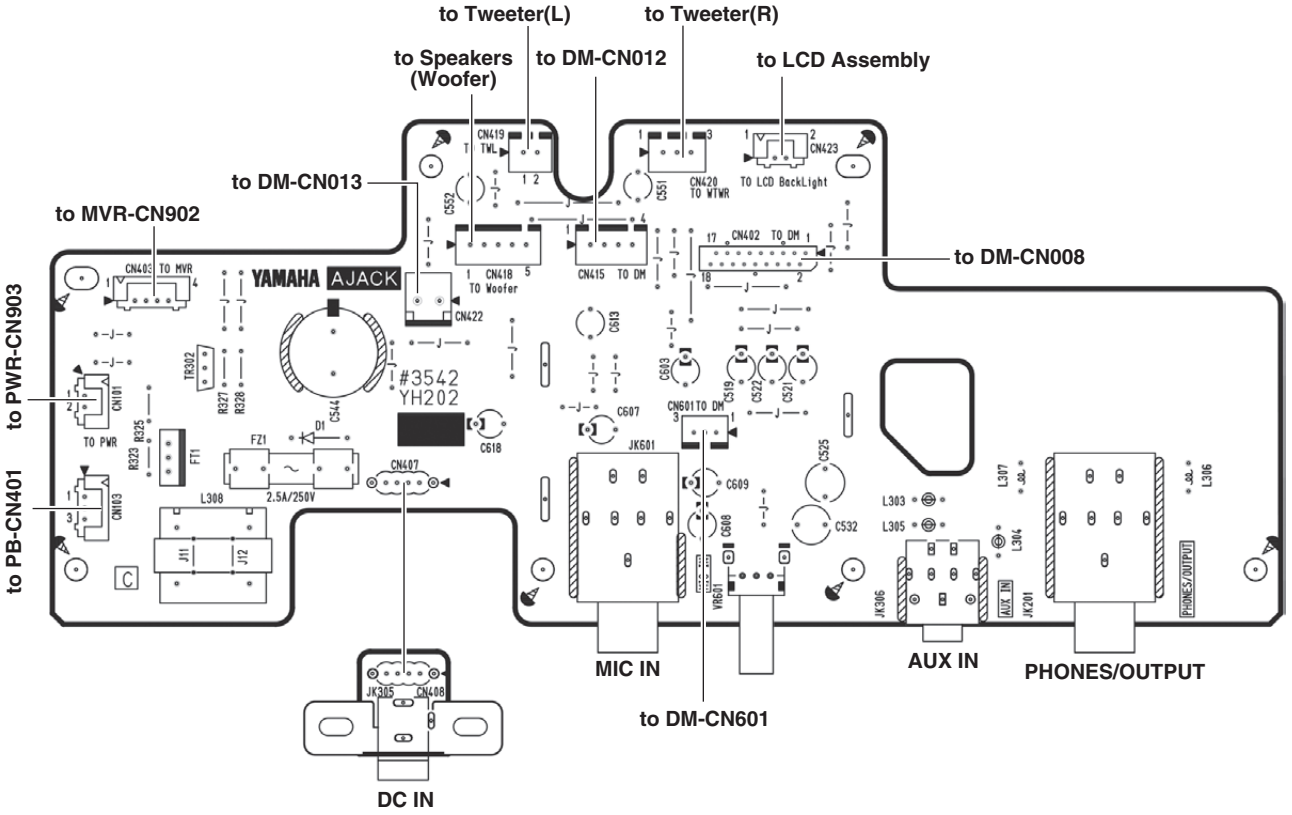

Component Side

• DJACK Circuit Board

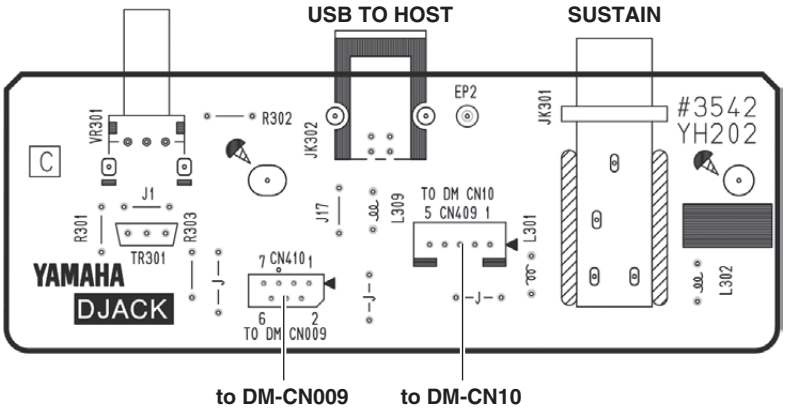

Component Side

• USB Circuit Board

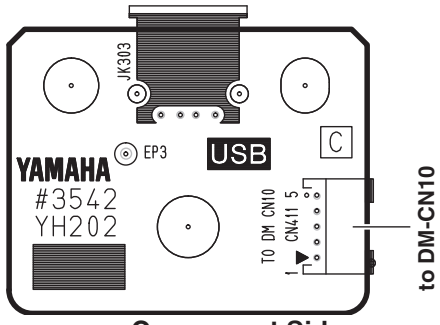

Component Side

AJACK : 2NA-ZR17520 2
DJACK : 2NA-ZR17520 2
USB : 2NA-ZR17520 2

• MVR Circuit Board

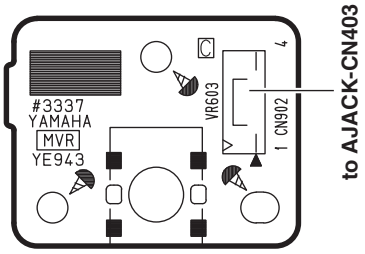

Component Side

• PWR Circuit Board

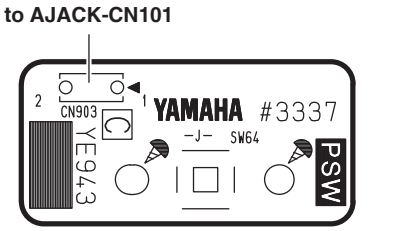

Component Side

• PB Circuit Board

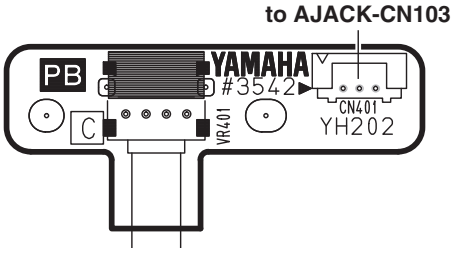

Component Side

• PEDAL Circuit Board

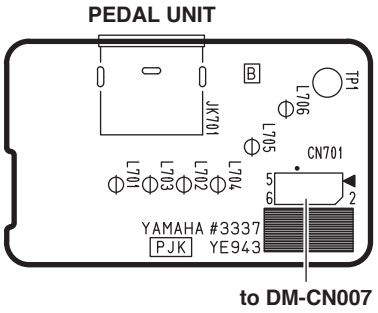

Component Side

PWR : 2NA-ZR99480
PEDAL : 2NA-ZR99480
MVR : 2NA-ZR99480
PB : 2NA-ZR17520 ⚠2

• PNL Circuit Board

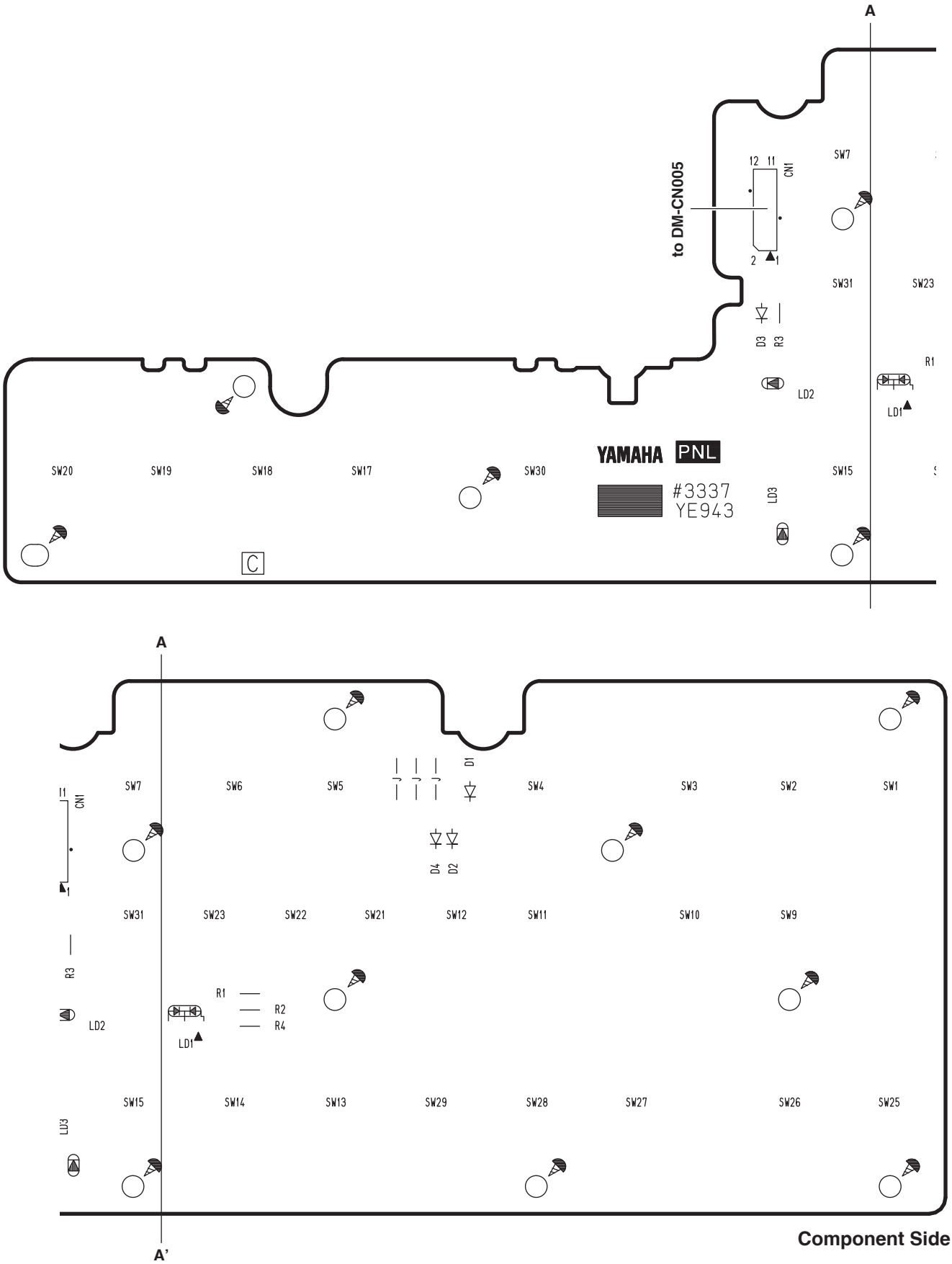

Component Side

2NA-ZR99480

• PNR Circuit Board

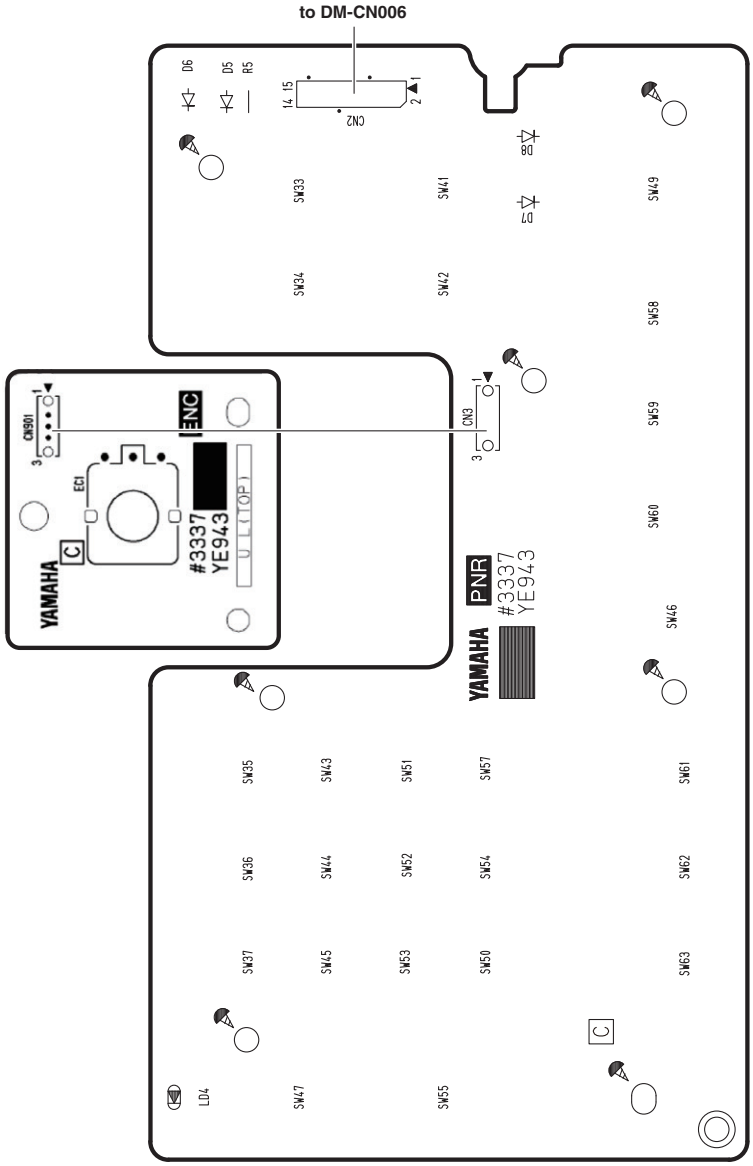

Component Side

PNR : 2NA-ZR99480

• GHL88H Circuit Board

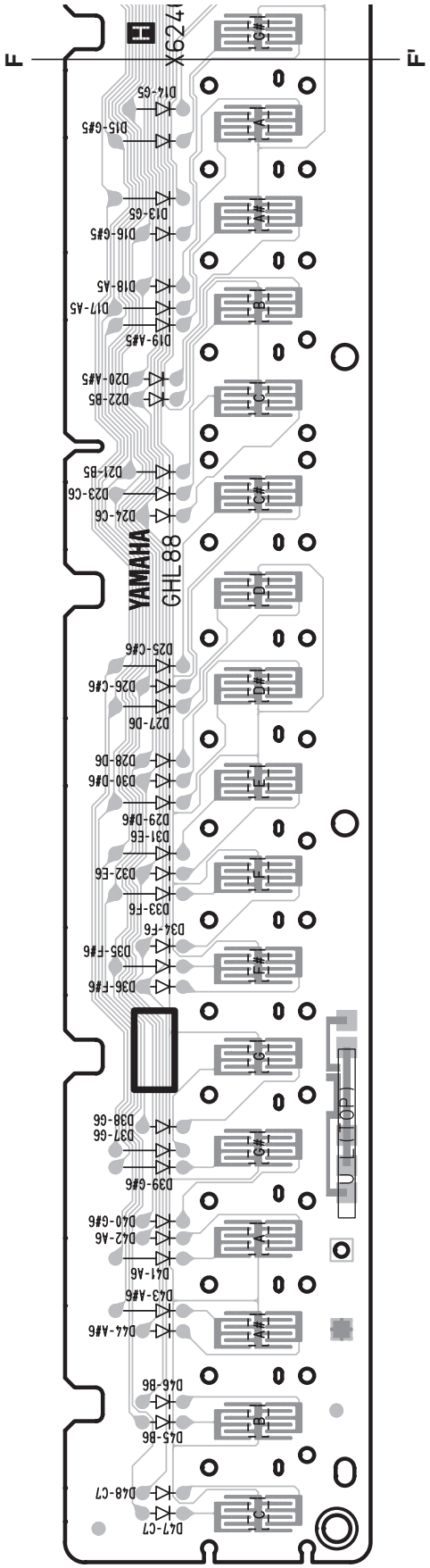

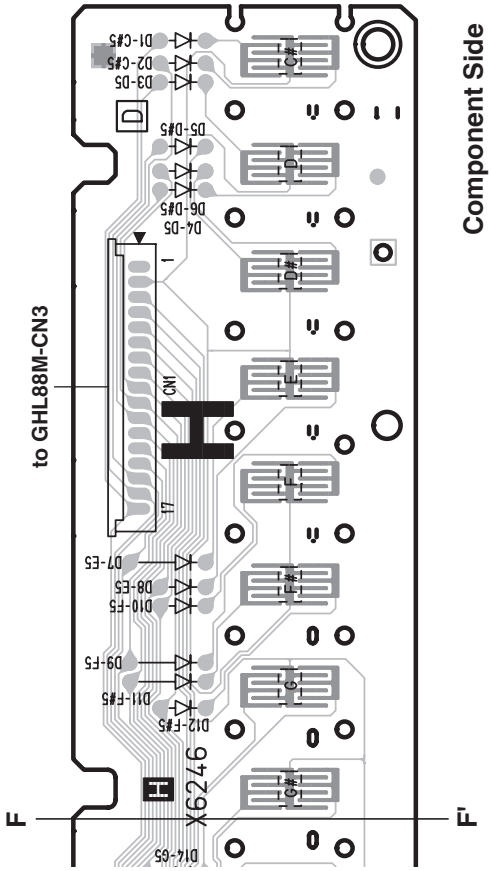

• GHL88L Circuit Board

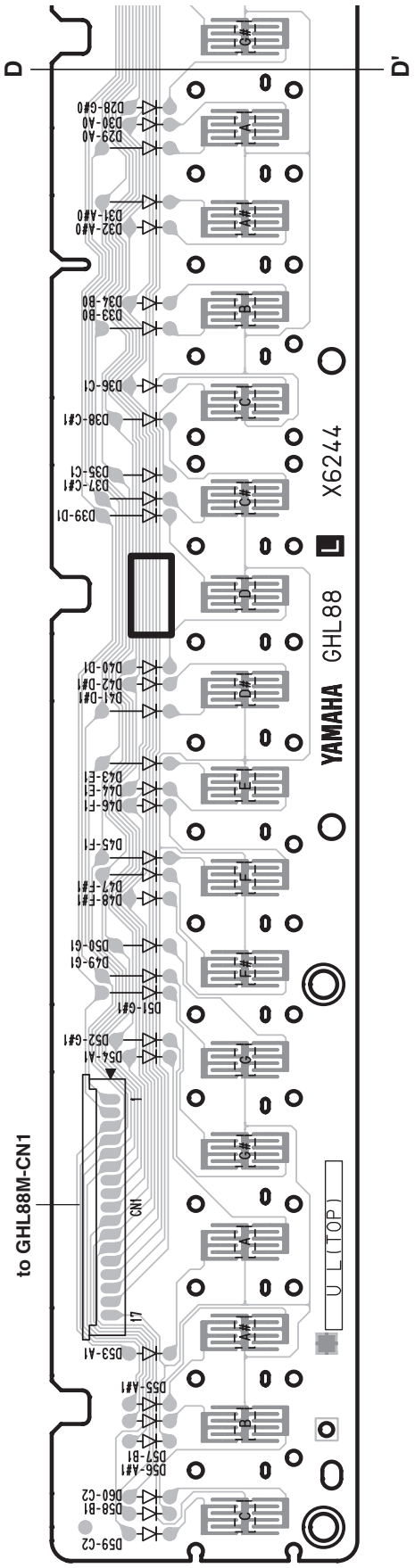

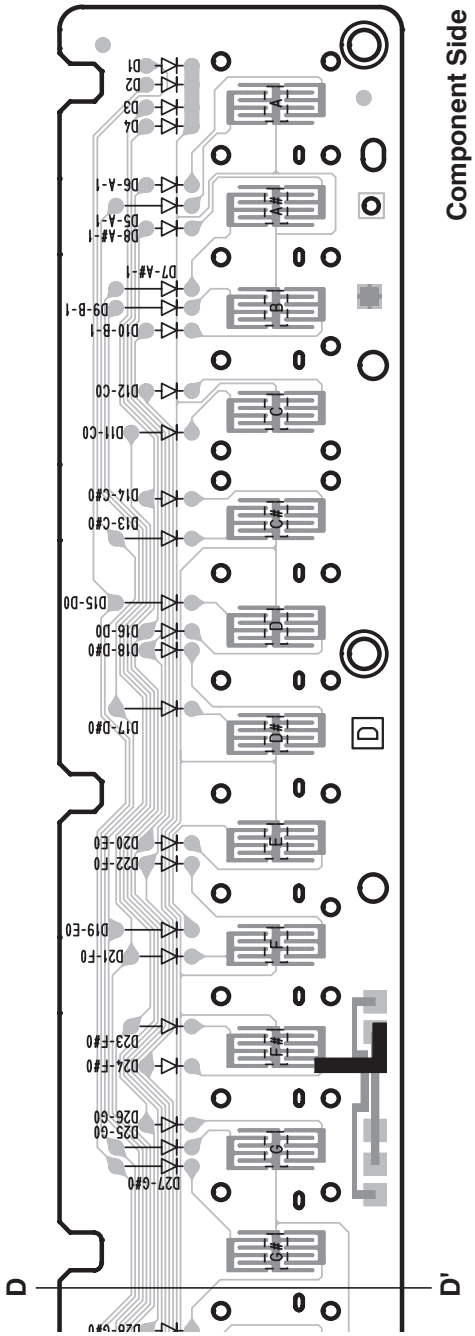

2NAK8-WF46230

• GHL88M Circuit Board

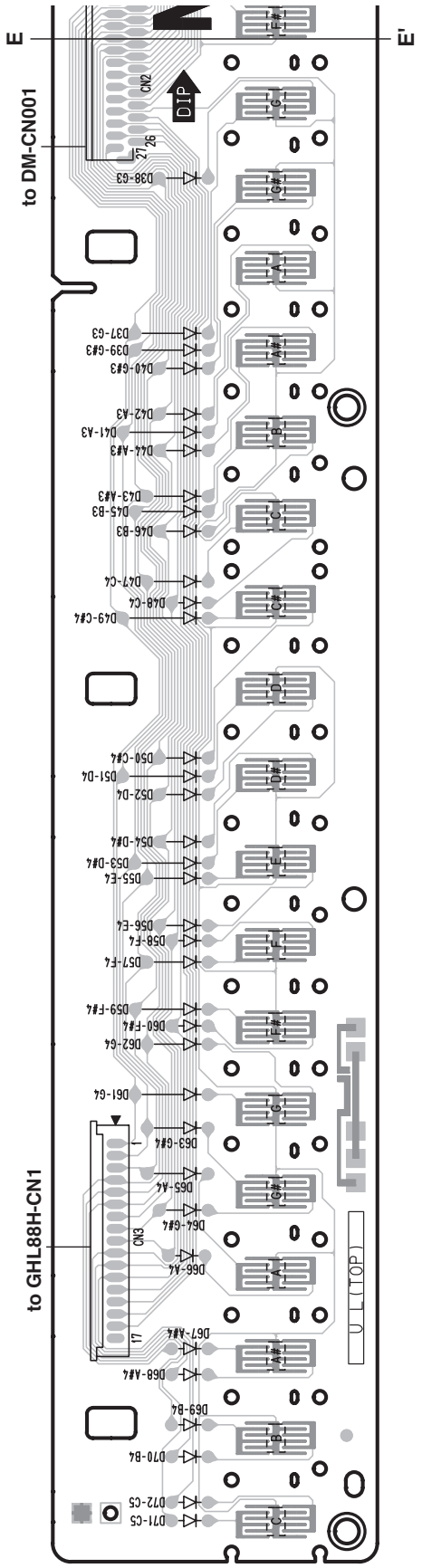

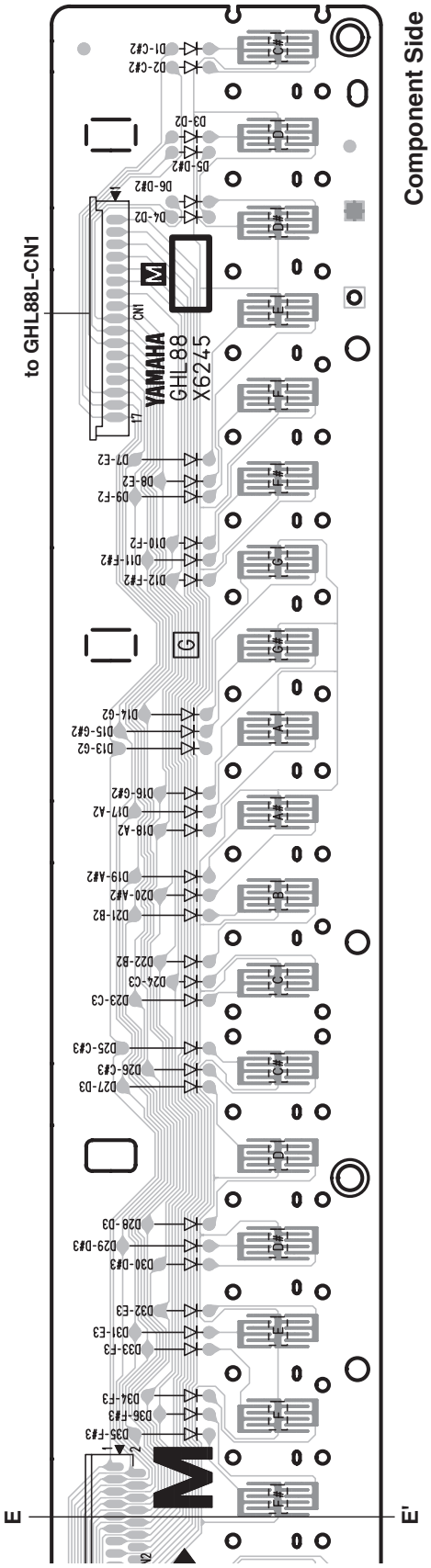

2NAK8-WF46240 2

■ DM CIRCUIT BOARD TEST METHOD

The DM Circuit Board is provided with test points for service check purposes.
Check the test points on the DM Circuit Board if the following symptoms appear.

Symptoms and check items

1) No LCD display with Power SW ON --> Check items 1 to 5 sequentially

2) No sound or distorted sound --> Check items 1, 2 and 3, and OUTPUT check items.

Test Point

NO.	Test Point	Circuit	Judgment criteria	Measured by	Parts with possible defects
①	+B	Power supply for DM Circuit Board	More than 11.0V	Multimeter	FT1 or FZ1 (On AJACK Circuit Board)
②	+5D	5V power for digital circuit	5.0V±0.5V	Multimeter	IC020
③	+3.3D	3.3V power for digital circuit	3.3V±0.3V	Multimeter	IC019
④	+1.2D	1.2V power for digital circuit	1.2V±0.1V	Multimeter	IC017
⑤	RESET	CPU & memory reset signal	3.3V±0.3V	Multimeter	IC024
⑥	OUT-L	DAC output L channel	There shall be audio output without distortion.	Signal Checker	IC015
⑦	OUT-R	DAC output R channel	There shall be audio output without distortion.	Signal Checker	IC015

Note: Use the standard AC adapter PA-150B or PA-150A for check operation.

Output

NO.	SPEAKER OUTPUT	PHONES/OUTPUT	DAC-L/R TEST POINT	Parts with possible defects
1	×	×	×	IC023
2	×	×	○	IC023 or Error Detect
3	○	×	×	IC015
4	×	○	○	IC035
5	○	×	○	IC401 or HP Jack

Note: "○" mark expresses normalcy and "×" mark expresses a failed state.

DM Circuit Board (ZT153300)

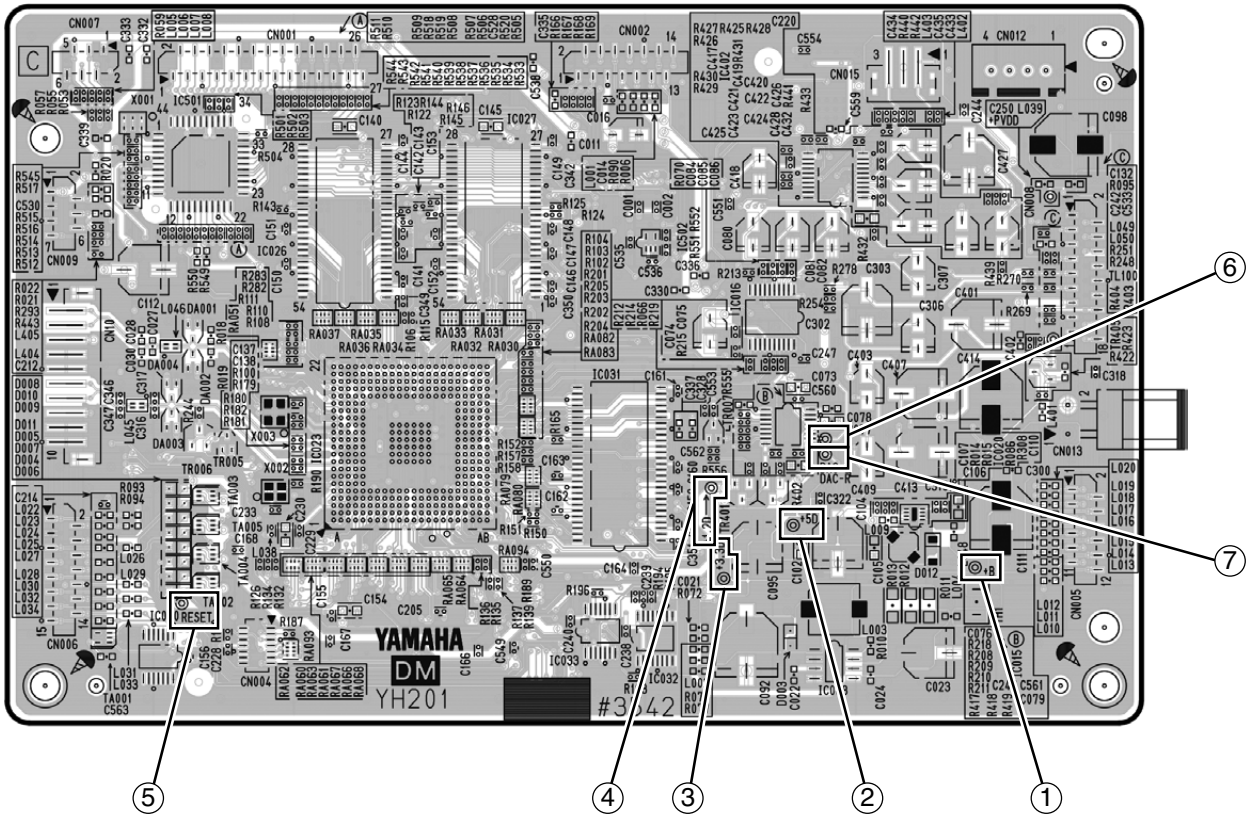

Component Side

■ TEST PROGRAM

*	*If you execute the test No.55 (Factory Set), then the user's preset data may be lost. Therefore, backup the user's data in advance.*

A. PREPARATION

1) PA-150A or PA-150B (AC adaptor) is used.
2) Measuring device: Frequency counter, which can detect thousandth value or more, Level meter (with JIS-C filter), Oscilloscope
   Note: Use a stereo plug and connect a load resistor of 33Ω to the [PHONES/OUTPUT] jack for measurement unless otherwise specified. Input impedance of the measuring device should be 1 MΩ or more.
3) Jigs: Pedal unit (LP-7A or LP-7AWH), Foot switch (FC-4 or FC-5), USB cable, USB flash memory, USB-MIDI driver (*1), PC (Install a USB-MIDI driver(*1) in PC and finish the THROUGH setup.)

*1: Obtain the USB-MIDI driver from Yamaha official website.
(URL>>http://www.yamaha.com/kbdapps/)

B. HOW TO ENTER THE TEST PROGRAM

While pressing the C#2, F2 and G#2 keys, turn the [STANDBY/ON] switch on.

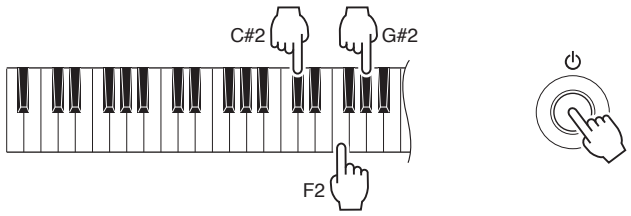

C. TEST PROCEDURE

1) When the test program is started, "TEST" will be displayed on the LCD.
2) Press the [-] or [+] button of the number buttons to select a test program item.
3) Press the [START/STOP] button to execute the test.

If the test result is OK, or the test item is completed, press the [START/STOP] button again to return to the test item selection display.

* Press the [-] or [+] button of the number buttons to select the next test program item.
* When the test result is OK, an asterisk sign (*) is added in front of its item name on display.

If the test result is NG, press the [DEMO/BGM] button or the lowest (leftmost) white key to return to the item selection display.

D. TEST PROGRAM LIST

TEST No.	LCD display	Test descriptions, Judging Criteria
1	**001 Version**	Displays version of the ROM. "*** **Prog**" "*** **Wave**" *** : Version
2	**002 Memory Chk1 All**	Checks the ROM, RAM, Wave ROM and Effect RAM connected to the CPU bus. If result is OK, Test No.3 to 7 test can be skipped. Confirm that "**Memory All OK**" is displayed on the LCD.
3	**003 Rom Chk1**	Checks the ROM connected to the CPU bus. Confirm that "**Rom OK**" is displayed on the LCD.
4	**004 Ram Chk1**	Checks the RAM connected to the CPU bus. Confirm that "**Ram OK**" is displayed on the LCD.
6	**006 Wave Rom Chk1**	Checks the Wave ROM connected to the CPU bus. Confirm that "**Wave Rom OK**" is displayed on the LCD.
7	**007 Effect Ram Chk1**	Checks the Effect RAM connected to the CPU bus. Confirm that "**Effect Ram OK**" is displayed on the LCD.
9	**009 Pit Chk**	Checks pitch accuracy. Connect the frequency counter to [PHONES/OUTPUT] jack. (Either L or R) Confirm that the correct signal is output. (441.0 Hz +/- 0.2 Hz)
10	**010 Output R**	Connect the level meter (with JIS-C filter) to the [PHONES/OUTPUT] jack. (33Ω load) Set the [MASTER VOLUME] control to the maximum position and check the output level. OUTPUT R: -9.0 +/- 2 dBu OUTPUT L: -60.0 dBu or less
11	**011 Output L**	Connect the level meter (with JIS-C filter) to the [PHONES/OUTPUT] jack. (33Ω load) Set the [MASTER VOLUME] control to the maximum position and check the output level. OUTPUT R: -60.0 dBu or less OUTPUT L: -9.0 +/- 2 dBu
17	**017 SP Mute Chk**	The C5 sound is played at L and R channels when the [START/STOP] button is pressed. Repeat the sound stop (MUTE ON) and the sound production (MUTE OFF) by pressing [+] or [-]button. Confirm that the sound stops at the speaker when MUTE ON. (The output of [PHONES/OUTPUT] jack does not stop.) * Do not insert any plugs to [PHONES/OUTPUT] jack.
18	**018 Mute Chk**	Connect the headphones to the [PHONES/OUTPUT] jack. The C5 sound is played at L and R channels when the [START/STOP] button is pressed. Repeat the sound stop (MUTE ON) and the sound production (MUTE OFF) by pressing [+] or [-] button. Confirm that the sound stops at both the speaker and the [PHONES/OUTPUT] jack, when MUTE ON. * Disconnect the headphones from [PHONES/OUTPUT] jack when check the speaker output.
19	**019 HP Chk**	"**HP In**" is displayed on the LCD when the [START/STOP] button is pressed. Connect the headphones to the [PHONES/OUTPUT] jack. Confirm that "**HP Out**" is displayed on the LCD. Disconnect the headphones from [PHONES/OUTPUT] jack. Confirm that "**HP OK**" is displayed on the LCD.
20	**020 AUX-IN Chk**	Confirm that "**Not Inserted**" is displayed when any plug is not inserted into the [AUX IN] jack. Confirm that "**Inserted**" is displayed when a plug is inserted into the [AUX IN] jack. (Loads: 33ohms to L ch and R ch) Input a sine wave (1 kHz, 0 dBu) into R ch of [AUX IN] terminal. (Do not input any signal into the L ch of [AUX IN] terminal.) Confirm that the output level at each terminal is as follows. OUTPUT R: -3.0 +/- 2 dBu OUTPUT L: -45.0 dBu or less Also, confirm that the output level at each terminal is reversed when L and R ch are reversely inputted.
21	**021 MIC Chk**	Confirm that "**Not Inserted**" is displayed on the LCD when any plug is not inserted into the [MIC IN] jack. Confirm that "**Inserted**" is displayed on the LCD when a stereo plug is inserted into the [MIC IN] jack. Input a sine wave (1 kHz, -30dBu) into the [MIC IN] terminal. Set the [INPUT GAIN] control to the maximum position and confirm that the output level is as follows. OUTPUT R: -80.0 dBu or less OUTPUT L: -80.0 dBu or less Set the [INPUT GAIN] control to the maximum position and confirm that the output level is as follows. OUTPUT R: -2.0 +/- 2 dBu OUTPUT L: -2.0 +/- 2 dBu Move the [INPUT GAIN] control between the minimum and the maximum position, and check no abnormal sound and moving smoothly.

TEST No.	LCD display	Test descriptions, Judging Criteria
22	**022 SW Chk**	Checks the switches on the panel. Press the switches as shown in the LCD. When a switch is pressed, a sound is played at the prescribed pitch. (Refer to the switch test item list on the p.36) Also, check that no key stick is existed. Confirm that "**SW OK**" is displayed on the LCD when all the switches are pressed as indicated. If more than two switches are pressed at a time, "**Over Two**" is displayed. Confirm that the rotary encoder is clockwise set to UP and is counterclockwise set to DOWN. To cancel the running test, press the [DEMO/BGM] button or the lowest key (white key C1) to return to the item selection display.
23	**023 All LED Chk**	Confirm that all LEDs turned on.
24	**024 Red LED Chk**	Confirm that all Red LEDs turned on.
25	**025 Green LED Chk**	Confirm that all Green LEDs turned on.
26	**026 LCD On**	Confirm that all the dots on the LCD are turned on.
27	**027 LCD Off**	Confirm that all the dots on the LCD are turned off.
28	**028 LCD Contrast Chk**	Checks the contrast of the LCD. Confirm that the LCD becomes blue (or white) when the contrast knob is turned clockwise (or counterclockwise). Adjust the contrast knob to the legible position of LCD.
30	**030 Master Vol Chk**	Set the main volume to the minimum position first, and move it to the maximum position. Confirm that "**Master Vol OK**" is displayed on the LCD.
31	**031 Emergency Circuit Chk**	It will check whether the emergency detection circuit is operating correctly. OK: "**Emergency Circuit OK**" is displayed on the LCD. NG: "**Emergency Circuit NG**" is displayed on the LCD. If the failure detection system is not detected, "**Emergency Circuit NG**" is displayed. * Disconnect the headphones from [PHONES/OUTPUT] jack, when check the speaker output.
32	**032 Pedal1 Chk**	Before power switch ON, Connect the pedal unit (LP-7A etc.) to the [PEDAL UNIT] jack. The C3 sound is played when the [START/STOP] button is pressed with the pedal released. The C4 sound is played when the soft (left) pedal is depressed. Released the pedal again and the sound will be stopped. Confirm that "**Pedal1 OK**" is displayed on the LCD.
33	**033 Pedal2 Chk**	Before power switch ON, Connect the pedal unit (LP-7A etc.) to the [PEDAL UNIT] jack. The C3 sound is played when the [START/STOP] button is pressed with the pedal released. The C4 sound is played when the sostenuto (center) pedal is depressed. Released the pedal again and the sound will be stopped. Confirm that "**Pedal2 OK**" is displayed on the LCD.
34	**034 Pedal3 Chk**	Before power switch ON, Connect the pedal unit (LP-7A etc.) to the [PEDAL UNIT] jack. The C3 sound is played when the [START/STOP] button is pressed with the pedal released. The G4 sound is played when the damper (right) pedal is pressed until the half position, and the C4 sound is played when the pedal is depressed fully. Released the pedal again and the sound will be stopped. Confirm that "**Pedal3 OK**" is displayed on the LCD.

TEST No.	LCD display	Test descriptions, Judging Criteria
35	**035 Pedal4 Chk**	Before power switch ON, Connect the foot switch (FC-4 or FC-5) to the [SUSTAIN] jack. The C3 sound is played when the [START/STOP] button is pressed with the pedal released. When you press the pedal pronounce the G4, to release the pedal and C4 will sound, to stop and remove the plug. Confirm that "**Pedal4 OK**" is displayed on the LCD.
36	**036 Pitch Bend Chk**	Confirm the position of the wheel is center. The G3 sound is played when the [PITCH BEND] wheel is rotated to maximum position and the C3 sound is played when the wheel is rotated to minimum position. The C4 sound is played when the wheel is returned center position. Confirm that "**Pitch Bend OK**" is displayed on the LCD.
38	**038 MIDI Chk**	Connect the PC with a USB-MIDI driver installed and the [USB TO HOST] terminal using a USB cable, and execute the test. (As for the PC, install a USB-MIDI driver in the PC and finish the THROUGH setup, in advance.) Confirm that the C4 sound is played and the LCD displays "**MIDI OK**".
39	**039 USB Connect Chk**	"**USB Connect --**" is displayed on the LCD when the [START/STOP] button is pressed. Connect the [USB TO DEVICE] and [USB TO HOST] terminals using the USB cable. Confirm that the C4 sound is played and the LCD displays "**USB Connect OK**".
40	**040 USB Strage Chk**	Connect a USB flash memory to the [USB TO DEVICE] terminal, and execute the test. (The USB memory must be formatted by the instrument.) Confirm that "**USB Storage OK**" is displayed on the LCD. In case of NG, the following message is displayed. "**USB Storage NG**": Failure in reading/writing "**NO Storage**": No media "**PROTECT**": Protected media
50	**050 Rom Chk2**	Checks the ROM connected to the CPU bus. (Full address) Confirm that "**Rom OK**" is displayed on the LCD. It will take about 60 seconds for the check.
51	**051 Ram Chk2**	Checks the RAM connected to the CPU bus. (Full address) Confirm that "**Ram OK**" is displayed on the LCD.
53	**053 Wave Rom Chk2**	Checks the Wave ROM connected to the CPU bus. (Full address) Confirm that "**Wave Rom OK**" is displayed on the LCD. It will take about 60 seconds for the check.
54	**054 Effect Ram Chk2**	Checks the Effect RAM connected to the CPU bus. (Full address) Confirm that "**Effect Ram OK**" is displayed on the LCD. It will take about 30 seconds for the check.
55	**055 Factory Set**	Initializes the entire backup area to reset to the factory default. "**Factory Set --**" is displayed on the LCD during the factory set. "**Factory Set End**" is displayed on the LCD when the factory set is finished. Do not turn off the power during this process.
56	**056 Test Exit**	This will leave the test program, reset the system and change to the play mode. Do not turn off the power until the main screen is displayed.

• Other Tests

Noise Level Check

Connect the level meter (with JIS-C filter) to the L/R of the [PHONES/OUTPUT] jack. (33 Ω load)

Set the [MASTER VOLUME] to the maximum level and check the noise level. Do not insert any plugs to [AUX IN] jack.

· PHONES L, R: –90 dBu or less

Switch test item list

Order	Switch Name	LCD Display	Note No.
1	DIAL UP	Dial Up	C2
2	DIAL DOWN	Dial Down	C#2
3	DEMO/BGM	Demo	D2
4	SCORE	Score	D#2
5	LYRICS	Lyrics	E2
6	SONG REC	Song REC	F2
7	LESSON WAINTING	Lesson Waiting	F#2
8	LESSON YOUR TEMPO	Lesson YourTmp	G2
9	LESSON MINUS ONE	Lesson MinusOne	G#2
10	SMART CHORD	Smart Chord	A2
11	MIC	Mic	A#2
12	SONG R/1	Song 1	B2
13	SONG L/2	Song 2	C3
14	SONG 3	Song 3	C#3
15	SONG 4	Song 4	D3
16	SONG 5	Song 5	D#3
17	SONG A	Song A	E3
18	METRONOME ON/OFF	Metronome	F3
19	TEMPO/TAP	Tempo/TAP	F#3
20	ACMP	ACMP	G3
21	INTRO/ENDING	Intro	G#3
22	MAIN/AUTO FILL	Main/Fill	A3
23	SYNC STOP	Sync Stop	A#3
24	SYNC START	Sync Start	B3
25	START/STOP	Start/Stop	C4
26	BANK/MEMORY	Memory	C#4
27	REGIST 1	Regist 1	D4
28	REGIST 2	Regist 2	D#4
29	REGIST 3	Regist 3	E4
30	REGIST 4	Regist 4	F4
31	CATEGORY –	Category –	F#4
32	CATEGORY +	Category +	G4
33	EXIT	Exit	G#4
34	EXECUTE	Execute	A4
35	PIANO ROOM	Piano Room	A#4
36	SONG	Song	B4
37	STYLE	Style	C5
38	VOICE	Voice	C#5
39	MUSIC DATABASE	MusicDataBase	D5
40	Tenkey 1	Tenkey 1	D#5
41	Tenkey 2	Tenkey 2	E5
42	Tenkey 3	Tenkey 3	F5
43	Tenkey 4	Tenkey 4	F#5
44	Tenkey 5	Tenkey 5	G5
45	Tenkey 6	Tenkey 6	G#5
46	Tenkey 7	Tenkey 7	A5
47	Tenkey 8	Tenkey 8	A#5
48	Tenkey 9	Tenkey 9	B5
49	Tenkey –	Tenkey –	C6
50	Tenkey 0	Tenkey 0	C#6
51	Tenkey +	Tenkey +	D6
52	FILE CONTROL	File Menu	D#6
53	FUNCTION	Function	E6
54	SPLIT ON/OFF	Split	F6
55	DUAL ON/OFF	Dual	F#6
56	HARMONY ON/OFF	Harmony	G6

■ BACKUP

The following data will be always maintained even if the power is turned off.
If you want to initialize backup data, use the "Clearing Backup data" operation of "INITIALIZATION" as explained below.
The "Clearing Backup data" does not delete the files that have been transferred from a computer or loaded from a USB flash memory.
If you want to delete the all files, see "Clearing files in flash memory area" below.

● Backup Data

- Piano Room settings
- Registration Memory data
- Microphone settings
- Function Settings:Tuning, Split Point, Touch Sensitivity, Style Volume, Song Volume, Wireless LAN Volume, Metronome Volume, Grade, Demo Group, Demo Play mode, Demo Cancel, Panel Sustain, Master EQ type, Chord Fingering, Auto Power Off setting, Damper Resonance ON/OFF, Output Gain, I.A. Control ON/OFF, I.A. Control Depth, Audio Volume, Aux IN Level, Portamento Time, Assignable Pedal
- Wireless LAN settings

In addition to the Backup data above, all the User Songs and all the Song and Style files transferred from a computer or loaded from a USB flash memory will be maintained even if you turn off the power.

■ INITIALIZATION

This function erases the Backup data described above and Song/Style data, then restores all the default factory settings.
As required, execute one of the following two procedures.

・Clearing Backup data

This operation initializes the backup data.
Turn the power on by pressing the [⏻] (Standby/On) switch while holding the highest white key on the keyboard.

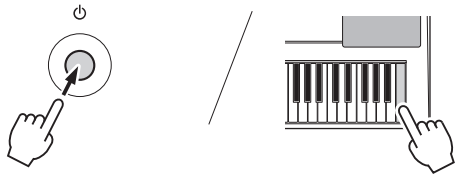

・Clearing files in flash memory area

This operation deletes all User Songs and all the Songs and Styles that have been transferred from a computer or loaded from a USB flash memory. Turn the power on by pressing the [⏻] (Standby/On) switch while simultaneously holding the highest white key and the three highest black keys on the keyboard.



⚠ When you "Clearing files in flash memory area", Song data and Style data you have purchased and downloaded will also be cleared. Make sure to save your important data by transferring to a computer.

■ SYSTEM BOOTING FLOW CHART

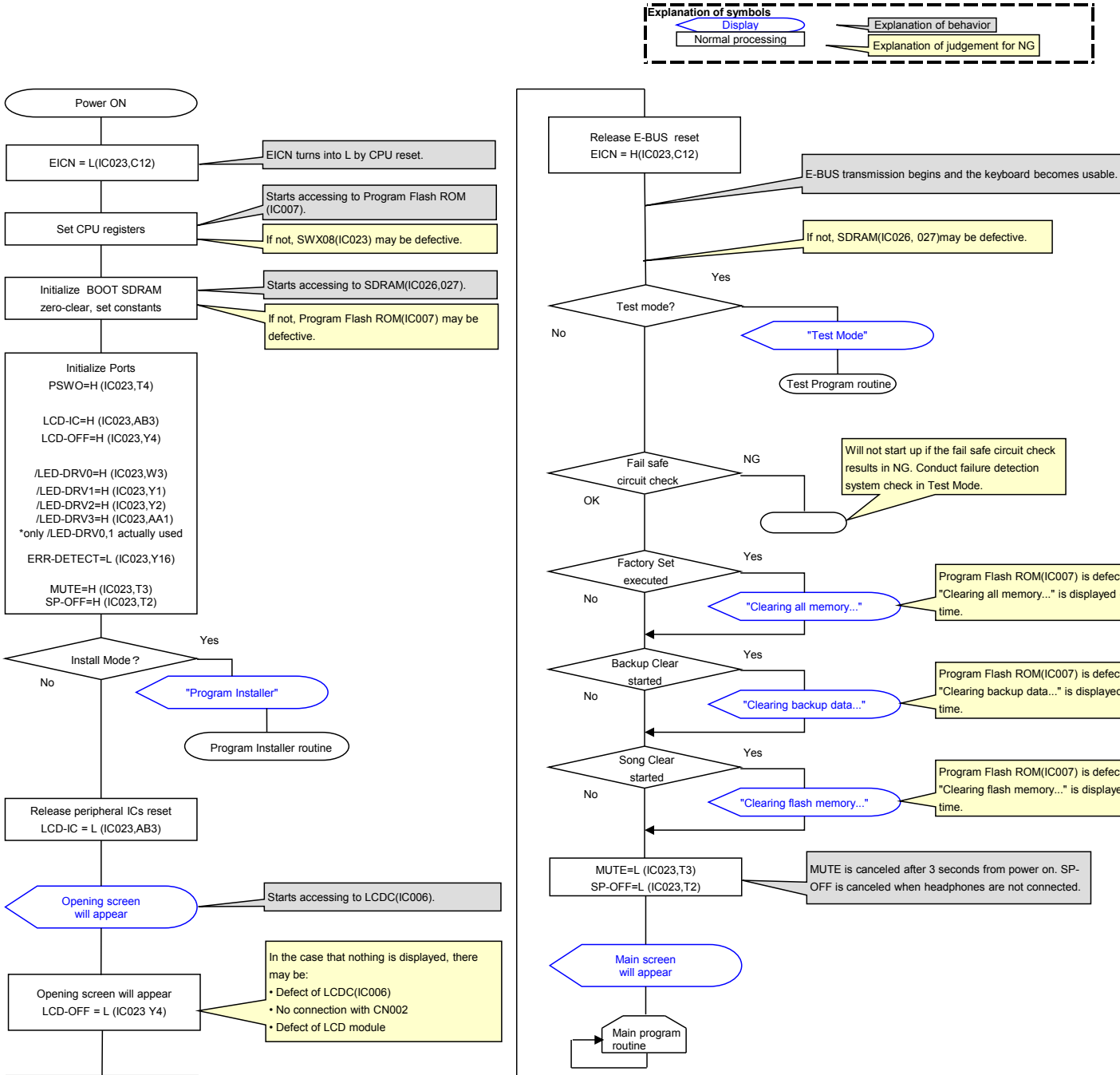

* **"Factory Set executed" refers to the condition of turning on the power after executing "Factory Set" in the Test Program.**

* **"Fail safe circuit check" checks whether MUTE functions correctly when the pulse ERR-DETECT is interrupted.**

PortableGrand

DGX-660B/DGX-660WH

PARTS LIST

■ CONTENTS

OVERALL ASSEMBLY 2
MAIN UNIT 5
UPPER CASE ASSEMBLY 9
BOTTOM BOARD ASSEMBLY 10
KEYBOARD ASSEMBLY 11
ELECTRICAL PARTS 13

Note: See parts list for details of circuit board conponent parts.

A:	Australian model	Q:	South-east Asia model
B:	British model	T:	Taiwan model
C:	Canadian model	U:	U.S.A. model
D:	German model	V:	General export model (110V)
E:	European model	W:	General export model (220V)
F:	French model	N,X:	General export model
H:	North European model	Y:	Export model
I:	Indonesian model	K:	Korean model
J:	Japanese model	P:	Brazilian model
M:	South African model	Z:	India model
O:	Chinese model		

■ WARNING

Components having special characteristics are marked ⚠ and must be replaced with parts having specifications equal to those originally installed.

- ■ The numbers in “QTY” shows quantities for each unit.
- ■ The parts with “--” in “Part No.” are not available as spare parts.
- ■ This mark “ } ” in the REMARKS column means these parts are interchangeable.
- ■ The second letter of the shaded ( ) part number is I, not one.
- ■ The second letter of the shaded ( ) part number is O, not zero.

■ OVERALL ASSEMBLY

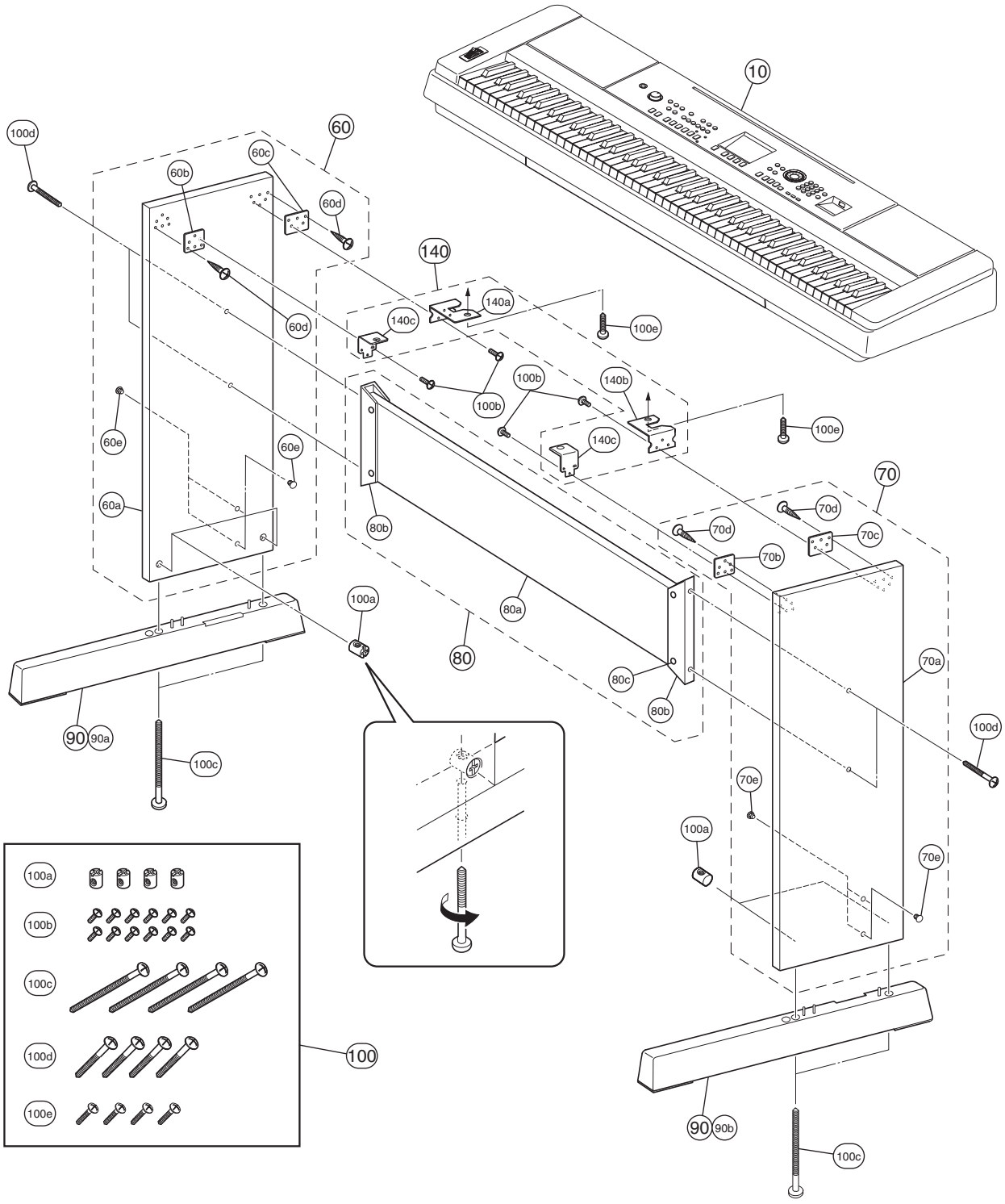

Music Rest

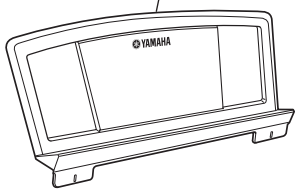

Foot Pedal

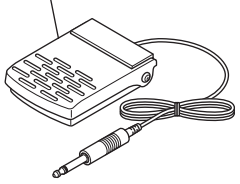

AC Adaptor

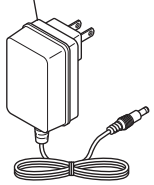

● DGX660B

REF NO.	PART NO.	DESCRIPTION		部品名	REMARKS	QTY
		OVERALL ASSEMBLY		総組立	DGX-660B	
	10	--	MAIN UINT		メインユニット	(ZS29750)
*	60	**ZS379700**	SIDE BOARD L ASSEMBLY		側板Ｌ Ａｓｓ’ｙ	
	60a	--	SIDE BOARD L		側板Ｌ	(ZS40430)
	60b	--	SIDE BOARD PLATE F	2.0 PAINT BLACK	側板金具Ｆ	(ZF38310)
	60c	--	SIDE BOARD PLATE R	2.0 PAINT BLACK	側板金具Ｒ	(ZF38320)
	60d	**WE95510R**	BIND HEAD TAPPING SCREW-1	3.5X16 MFZN2B3	ＴＰ＃１＋ＢＩＮＤ	6
	60e	**WK844500**	CAP BLACK		キャップ ブラック	4
*	70	**ZS379800**	SIDE BOARD R ASSEMBLY		側板Ｒ Ａｓｓ’ｙ	
	70a	--	SIDE BOARD R		側板Ｒ	(ZS40440)
	70b	--	SIDE BOARD PLATE F	2.0 PAINT BLACK	側板金具Ｆ	(ZF38310)
	70c	--	SIDE BOARD PLATE R	2.0 PAINT BLACK	側板金具Ｒ	(ZF38320)
	70d	**WE95510R**	BIND HEAD TAPPING SCREW-1	3.5X16 MFZN2B3	ＴＰ＃１＋ＢＩＮＤ	6
	70e	**WK844500**	CAP BLACK		キャップ ブラック	4
*	80	**ZS388300**	STAND RAIL ASSEMBLY		枠 Ａｓｓ’ｙ	
	80a	--	STAND RAIL		スタンド枠	(ZS38890)
	80b	--	STAND RAIL SUPPORT		枠補強金具	(WA69460) 2
	80c	**WE95510R**	BIND HEAD TAPPING SCREW-1	3.5X16 MFZN2B3	ＴＰ＃１＋ＢＩＮＤ	8
	90	--	TOE BLOCK BAG UP		妻土台袋入	(ZJ69100)
	90a	**ZJ566200**	TOE BLOCK L		妻土台Ｌ	
	90b	**ZJ566300**	TOE BLOCK R		妻土台Ｒ	
	100	**ZF495200**	SCREW SET	BLACK	ネジセット	
	100a	--	JOINT CONNECTOR	6.0X13	ナット特殊	(WF55910) 4
	100b	--	BIND HEAD SCREW 3X8	3.0X8 MFZN2B3	小ネジ＋ＢＩＮＤ	(WE98360) 12
	100c	--	TRUSS HEAD SCREW	6.0X70 MFZN2B3	特注ネジ＋ＴＲＵＳ	(WF49230) 4
	100d	--	TRUSS HEAD SCREW	6.0X30 MFZN2B3	特注ネジ＋ＴＲＵＳ	(WH28700) 4
	100e	--	TRUSS HEAD SCREW	5.0X16 MFZN2W3	小ネジ＋ＴＲＵＳ	(WF49240) 4
	140	**ZF501100**	STAY SET	BLACK	金具セット	
	140a	--	ST CATCH ANGLE L	2.0 L PAINT BL	ＳＴ受け金具 Ｌ	(ZF38220)
	140b	--	ST CATCH ANGLE R	2.0 R PAINT BL	ＳＴ受け金具 Ｒ	(ZF38230)
	140c	--	STAND ANGLE	2.0 L PAINT BL	スタンドアングル	(ZF38100) 2
		ACCESSORIES		付属品	DGX-660B	
		ZF451800	MUSIC REST WITH BAG	BLACK	譜面板袋入り	
		WU089600	FOOT PEDAL		フットペダル	
⚠ *		**ZS390400**	AC ADAPTOR SET	PA-150B E	ＡＣアダプター	E,I
⚠ *		**ZS390300**	AC ADAPTOR SET	PA-150B B	ＡＣアダプター	B
⚠		**WK014700**	AC ADAPTOR	PA-150U U	ＡＣアダプター	U,C
⚠ *		**ZS390200**	AC ADAPTOR SET	PA-150B K	ＡＣアダプター	K
⚠ *		**ZN031100**	AC ADAPTOR SET	PA-150B BRA	ＡＣアダプター	P
⚠ *		**ZN640000**	AC ADAPTOR SET	PA-150B A	ＡＣアダプター	A
⚠ *		**ZM962000**	AC ADAPTOR SET	PA-150B CHN	ＡＣアダプター	O
*		**ZS388400**	CHINESE SHEET SET	BLACK	中文シート袋入り	O
⚠ *		**ZU723100**	AC ADAPTOR SET	PA-150B IN	ＡＣアダプター	Z

* : New Parts

● DGX660WH

REF NO.	PART NO.	DESCRIPTION		部品名	REMARKS	QTY
		OVERALL ASSEMBLY		総組立	DGX-660WH	
10	--	FINAL ASSEMBLY	WHITE	メインユニット	(ZS29760)	
60	**ZF494100**	SIDE BOARD L ASSEMBLY		側板L Ass'y		
60a	--	SIDE BOARD L		側板L	(ZF35320)	
60b	--	SIDE BOARD PLATE F	2.0 PAINT SILVER	側板金具F	(ZF38330)	
60c	--	SIDE BOARD PLATE R	2.0 PAINT SILVER	側板金具R	(ZF38340)	
60d	**WE97070R**	BIND HEAD TAPPING SCREW-1	3.5X16 MFZN2W3	TP#1+BIND		6
60e	**WK844400**	CAP GRAY		キャップグレー		4
70	**ZF494200**	SIDE BOARD R ASSEMBLY		側板R Ass'y		
70a	--	SIDE BOARD R		側板R	(ZF35340)	
70b	--	SIDE BOARD PLATE F	2.0 PAINT SILVER	側板金具F	(ZF38330)	
70c	--	SIDE BOARD PLATE R	2.0 PAINT SILVER	側板金具R	(ZF38340)	
70d	**WE97070R**	BIND HEAD TAPPING SCREW-1	3.5X16 MFZN2W3	TP#1+BIND		6
70e	**WK844400**	CAP GRAY		キャップグレー		4
* 80	**ZS380400**	STAND RAIL ASSEMBLY		框Ass'y		
80a	--	STAND RAIL		スタンド框	(ZF35380)	
80b	--	STAND RAIL SUPPORT		框補強金具	(ZS38100)	2
80c	**WE97070R**	BIND HEAD TAPPING SCREW-1	3.5X16 MFZN2W3	TP#1+BIND		8
90	--	TOE BLOCK BAG UP		妻土台袋入	(ZJ69110)	
90a	**ZJ566400**	TOE BLOCK L		妻土台L		
90b	**ZJ566500**	TOE BLOCK R		妻土台R		
100	**ZF495300**	SCREW SET	SILVER	ネジセット		
100a	--	JOINT CONNECTOR	6.0X13	ナット特殊	(WF55910)	4
100b	--	BIND HEAD SCREW	3.0X8 MFZN2W3	小ネジ+BIND	(WE98720)	12
100c	--	TRUSS HEAD SCREW	6.0X70 MFZN2B3	特注ネジ+TRUS	(WF49230)	4
100d	--	SCREW +TRUS	6.0X30 MFZN2W3	特注ネジ+TRUS	(WF05290)	4
100e	--	TRUSS HEAD SCREW	5.0X16 MFZN2W3	小ネジ+TRUS	(WF49240)	4
140	**ZF501200**	STAY SET	SILVER	金具セット		
140a	--	ST CATCH ANGLE L	2.0 L PAINT SIL	ST受け金具L	(ZF38240)	
140b	--	ST CATCH ANGLE R	2.0 R PAINT SIL	ST受け金具R	(ZF38250)	
140c	--	STAND ANGLE	2.0 L PAINT SIL	スタンドアングル	(ZF38110)	2
		ACCESSORIES		付属品	DGX-660WH	
	ZF451900	MUSIC REST WITH BAG	WHITE	譜面板袋入り		
	WU089600	FOOT PEDAL	PK #3332	フットペダル		
⚠ *	**ZS390400**	AC ADAPTOR SET	PA-150B E	ACアダプター	E,I	
⚠ *	**ZS390300**	AC ADAPTOR SET	PA-150B B	ACアダプター	B	
⚠	**WK014700**	AC ADAPTOR	PA-150U U	ACアダプター	U,C	
⚠ *	**ZS390200**	AC ADAPTOR SET	PA-150B K	ACアダプター	K	
⚠ *	**ZN031100**	AC ADAPTOR SET	PA-150B BRA	ACアダプター	P	
⚠ *	**ZN640000**	AC ADAPTOR SET	PA-150B A	ACアダプター	A	
⚠ *	**ZM962000**	AC ADAPTOR SET	PA-150B CHN	ACアダプター	O	
*	**ZS388500**	CHINESE SHEET SET	WHITE	中文シート袋入り	O	
⚠ *	**ZU723100**	AC ADAPTOR SET	PA-150B IN	ACアダプター	Z	

* : New Parts

■ MAIN UNIT

• Bottom view 1

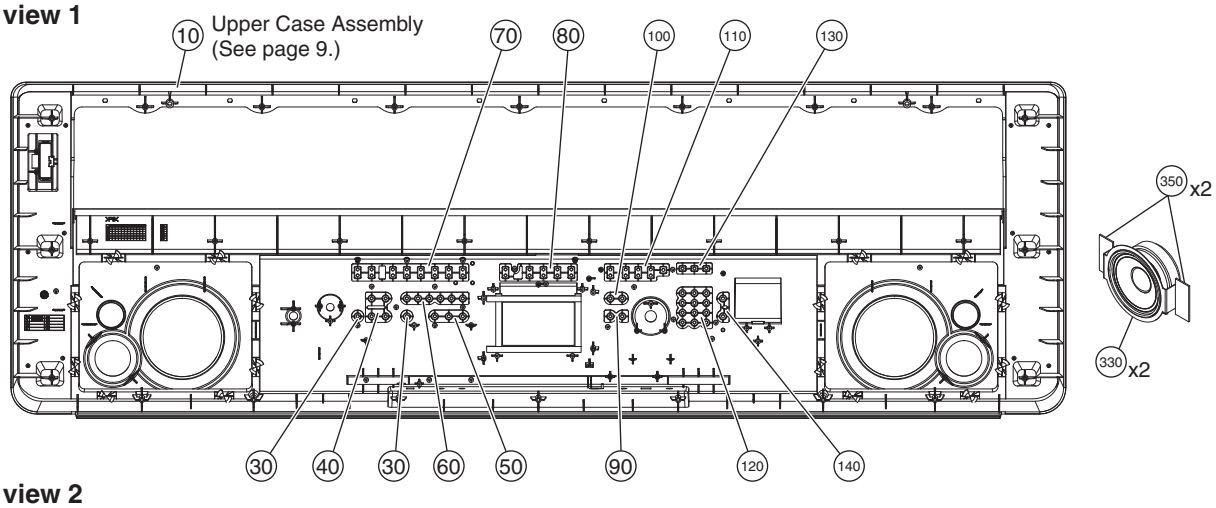

• Bottom view 2

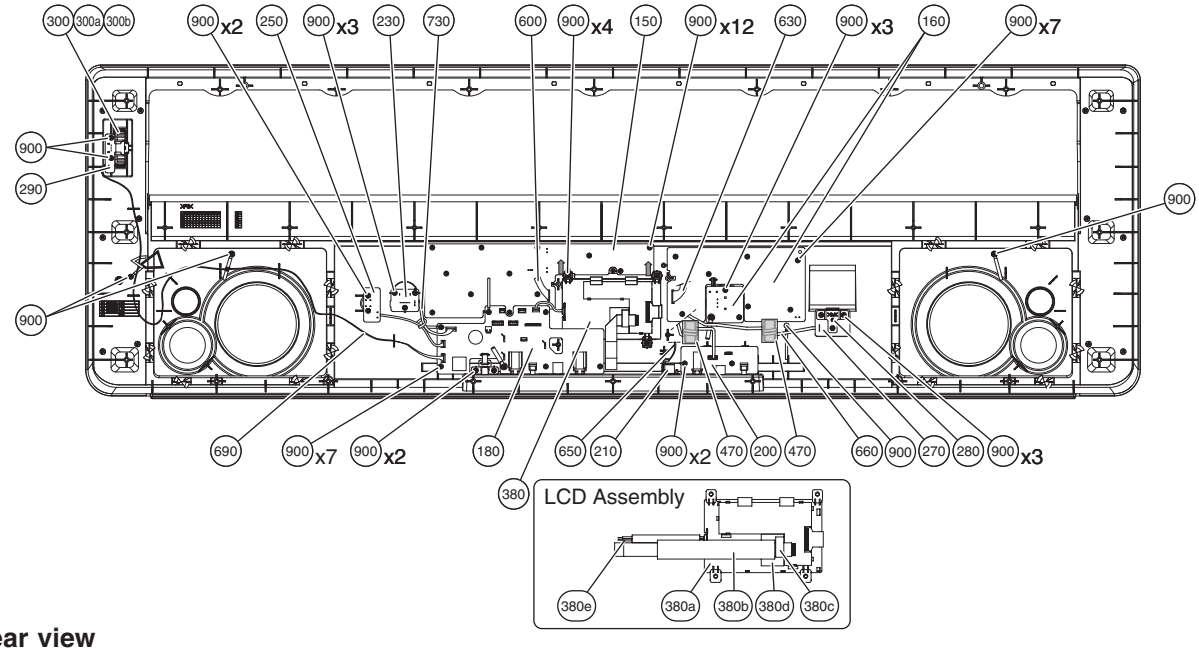

• Rear view

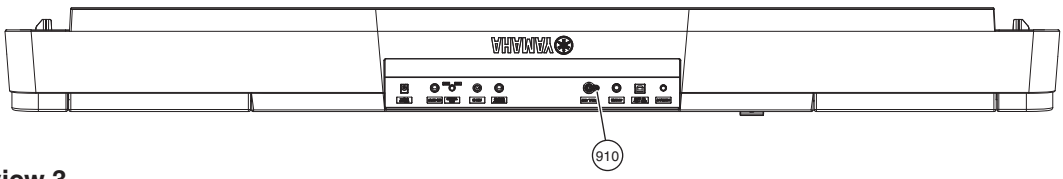

• Bottom view 3

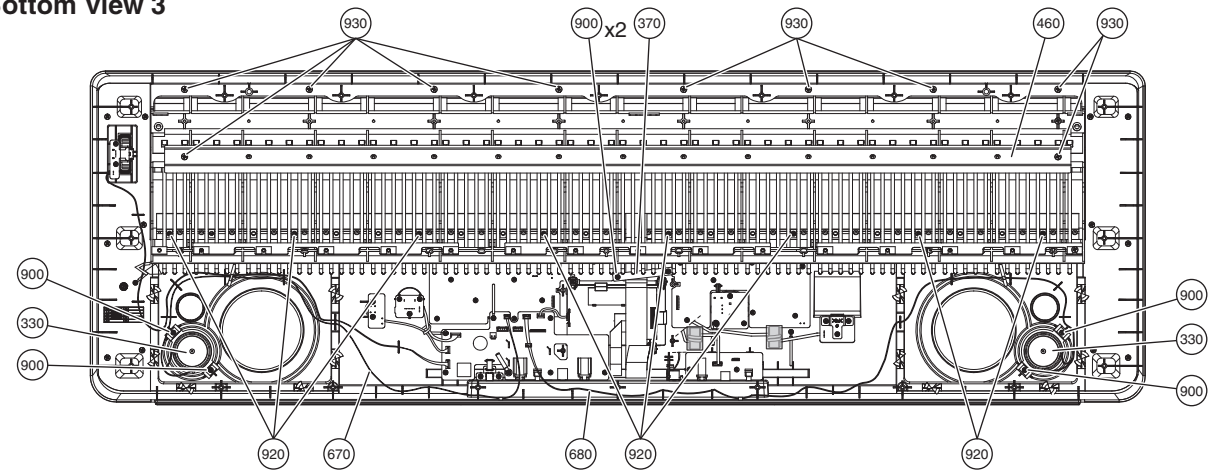

• **Bottom view 4**

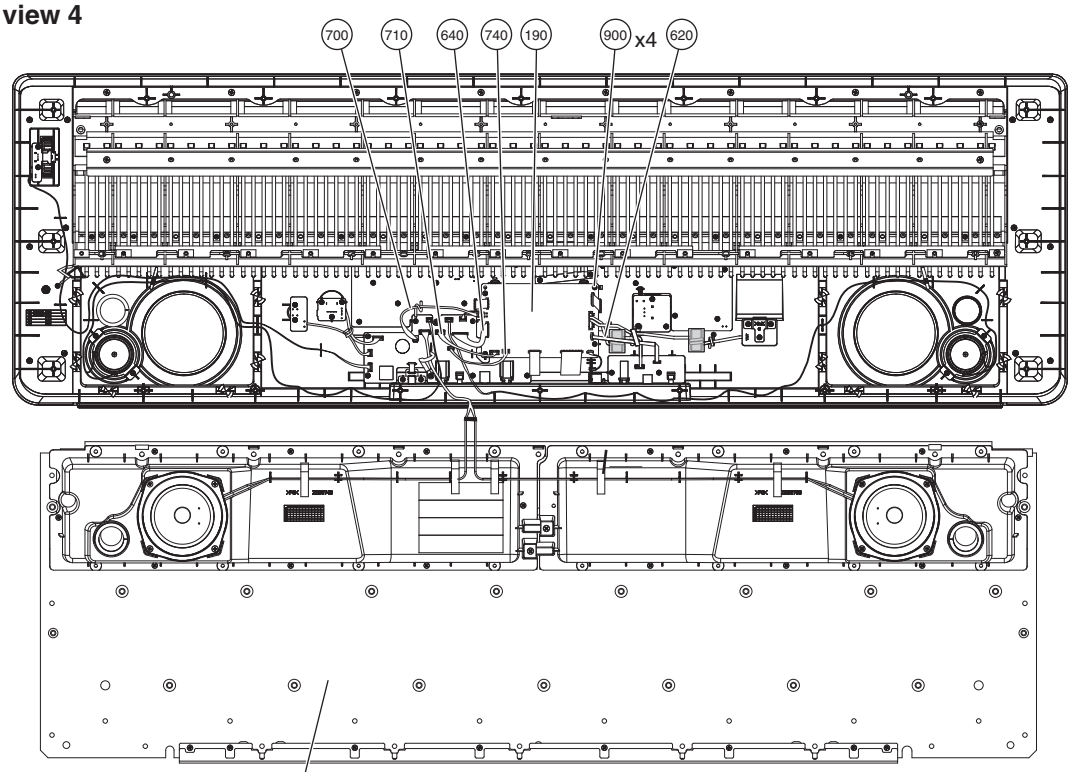

• **Bottom view 5**

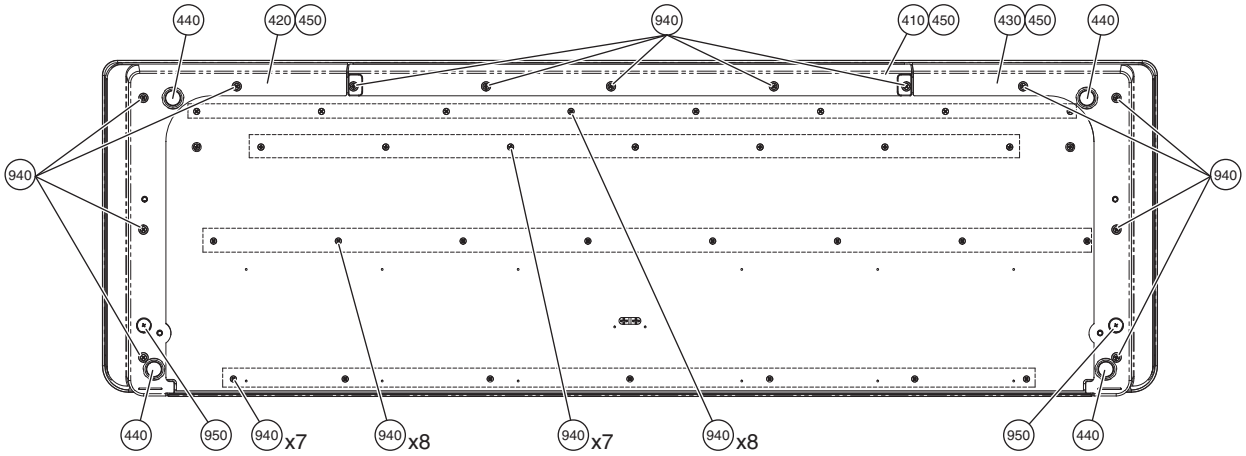

• **Top view**

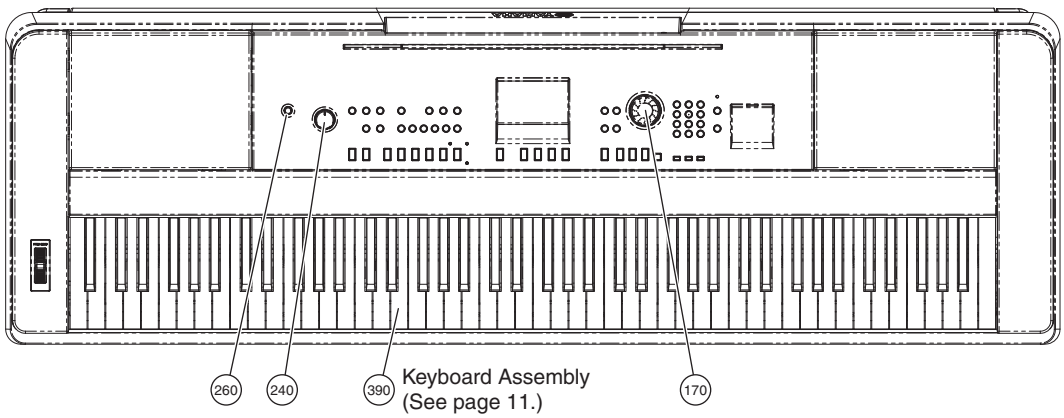

● DGX660B

	REF NO.	PART NO.	DESCRIPTION		部品名	REMARKS	QTY
			MAIN UINT		メインユニット	DGX-660B	
		--	MAIN UINT	BLACK	メインユニット	(ZS29750)	
*	10	**ZS297700**	UPPER CASE ASSEMBLY	BLACK	上ケースAss'y		
*	20	**ZS298100**	BOTTOM BOARD ASSEMBLY	B/WH	底板Ass'y		
*	30	**ZS298200**	PN_SWITCH A		PNスイッチA	DEMO/BGM,REC	2
*	40	**ZS298300**	PN_SWITCH B		PNスイッチB	SCORE,LYRICS,SMART CHORD, MIC SETTING	
*	50	**ZS298400**	PN_SWITCH C		PNスイッチC	WAITING,YOUR TEMPO,MINUS ONE	
*	60	**ZS298600**	PN_SWITCH D PRINTED		PNスイッチD印刷品	R/1,L/2,3,4,5,A	
*	70	**ZS298700**	PN_SWITCH E		PNスイッチE	METRONOME ON/OFF,TEMPO/TAP	
						REPEAT&LEARN,A-B REPEAT, REW,FF,PAUSE,START/STOP	
*	80	**ZS298800**	PN_SWITCH F		PNスイッチF	REGIST MEMORY BANK,1-4	
*	90	**ZS299000**	PN_SWITCH G PRINTED		PNスイッチG印刷品	CATEGORY(<<,>>)	
*	100	**ZS299100**	PN_SWITCH H		PNスイッチH	EXIT,EXECUTE	
*	110	**ZS299200**	PN_SWITCH I		PNスイッチI	PIANO ROOM,SONG/AUDIO, STYLE,VOICE,MUSIC DATABASE	
*	120	**ZS299400**	PN_SWITCH J PRINTED		PNスイッチJ印刷品	0-9,-/NO,+/YES	
*	130	**ZS299500**	PN_SWITCH K		PNスイッチK	SPLIT ON/OFF,DUAL ON/OFF, HARMONY ON/OFF	
*	140	**ZS299600**	PN_SWITCH L		PNスイッチL	FILE CONTROL,FUNCTION	
*	150	**ZR998000**	CIRCUIT BOARD	PNL	PNLシート		
*	160	**ZR998100**	CIRCUIT BOARD	PNR	PNRシート		
*	170	**ZR720000**	ENCODER KNOB	COMMON	エンコーダツマミ	DATA ENTRY	
*	180	**ZR997700**	CIRCUIT BOARD	AJACK	AJACKシート		
*	190	**ZR175300**	CIRCUIT BOARD	DM	DMシート		
*	200	**ZR997600**	CIRCUIT BOARD	DJACK	DJACKシート		
*	210	**ZR998300**	CIRCUIT BOARD	PEDAL	PEDALシート		
*	230	**ZR998500**	CIRCUIT BOARD	MVR	MVRシート		
	240	**VU43240R**	V-KNOB		Vツマミ	MASTER VOLUME	
*	250	**ZR998400**	CIRCUIT BOARD	PWR	PWRシート		
	260	**V715120R**	PUSH KNOB	BLACK	プッシュツマミクロ	STANDBY/ON	
*	270	**ZR997800**	CIRCUIT BOARD	USB	USBシート		
	280	**WT788700**	BRACKET 6		ブラケット		
*	290	**ZR997900**	CIRCUIT BOARD	PB	PBシート		
	300	**VY79310R**	WHEEL ASSEMBLY		ホイールAss'y		
	300a	**VY75080R**	WHEEL		ホイール	} PITCH BEND	
	300a	**VY750810**	WHEEL		ホイール	} PITCH BEND	
	300b	**VT44010R**	SPRING		ホイールバネ		
	330	**YF221A00**	LOUD SPEAKER	5.0CM 6OHM 10W	スピーカ	Tweeter	2
*	350	**ZS297900**	CUSHION PE	30X13X1	クッションPE		4
	370	**ZR998700**	CIRCUIT BOARD	MKO	MKOシート		
*	380	**ZS301100**	LCD ASSEMBLY		液晶Ass'y		
	390	**ZC589700**	GHL KEYBOARD TEXTURE	A88 K6	GHL鍵盤黒シボD		
	410	**ZG884900**	LOWER CASE F MOLDING		下ケースF成形品		
	420	**ZF013900**	LOWER CASE L MOLDING		下ケースL成形品		
	430	**ZF014100**	LOWER CASE R MOLDING		下ケースR成形品		
	440	**V928180R**	FOOT	T1.6	ゴム脚		4
	450	**WT983300**	CUSHION	730X17X2	クッション		3
*	470	**ZU532400**	CUSHION	110X23X2	クッション(PE)		2
	600	**ZF629300**	FFC CABLE	12P L=80 P=1.0	FFCケーブル		
*	620	**ZS193600**	FFC ASSEMBLY	DJK 7P L=130 P=1.0	DJK束線		
	630	**ZF629400**	FFC CABLE	15P L=90 P=1.0	FFCケーブル		
	640	**ZF629600**	FFC CABLE	18P L=90 P=1.0	FFCケーブル		
	650	**ZF508900**	FFC ASSEMBLY	PDN 6P L=90 P=1.0	PDN束線		
	660	--	CONNECTOR ASSEMBLY	USB PH10P-PH5Px2 L=240/130	USB束線	(ZU44480)	
	670	--	CONNECTOR ASSEMBLY	TWL XH2P L=800	TWL束線	(ZF51040)	
	680	--	CONNECTOR ASSEMBLY	TWR XH3P L=1070	TWR束線	(ZF51050)	
	690	--	WIRING ASSEMBLY	PTB 3P L=755	PTB束線	(ZF51080)	
	700	--	CONNECTOR ASSEMBLY	PWR VH2P L=130	PWR束線	(ZF51010)	
	710	--	CONNECTOR ASSEMBLY	SPB XH4P L=140	SPB束線	(ZF51020)	
	730	--	WIRING ASSEMBLY	MVR 4P L=95	MVR束線	(ZF51070)	
	740	--	CONNECTOR ASSEMBLY	MIC PH3P L=140	MIC束線	(ZS20280)	
	900	**WE774300**	BIND HEAD TAPPING SCREW-B	3.0X8 MFZN2W3	Bタイト+BIND		61
	910	**WE983600**	BIND HEAD SCREW 3X8	3.0X8 MFZN2B3	小ネジ+BIND		
	920	**WF47340R**	BIND HEAD TAPPING SCREW-B	3.0X25 MFZN2W3	Bタイト+BIND		8
	930	**WE98120R**	BIND HEAD TAPPING SCREW-B	4.0X12 MFZN2W3	Bタイト+BIND		10
	940	**WJ011400**	BIND HEAD TAPPING SCREW-B	4.0X25 MFZN2W3	Bタイト+BIND		43
	950	**WF74240R**	GUIDE SCREW 6X20	6.0X20. 3-14	ガイドスクリュー		2

＊: New Parts

● DGX660WH

	REF NO.	PART NO.	DESCRIPTION		部品名	REMARKS	QTY
			MAIN UINT		メインユニット	DGX-660WH	
		--	FINAL ASSEMBLY	WHITE	メインユニット	(ZS29760)	
*	10	**ZS297800**	UPPER CASE ASSEMBLY	WHITE	上ケースAss'y		
*	20	**ZS298100**	BOTTOM BOARD ASSEMBLY	B/WH	底板Ass'y		
*	30	**ZS492700**	PN_SWITCH A		PNスイッチA	DEMO/BGM,REC	2
*	40	**ZS299700**	PN_SWITCH B		PNスイッチB	SCORE,LYRICS,SMART CHORD, MIC SETTING	
*	50	**ZS299800**	PN_SWITCH C		PNスイッチC	WAITING,YOUR TEMPO,MINUS ONE	
*	60	**ZS300000**	PN_SWITCH D PRINTED		PNスイッチD印刷品	R/1,L/2,3,4,5,A	
*	70	**ZS300100**	PN_SWITCH E		PNスイッチE	METRONOME ON/OFF,TEMPO/TAP	
*	80	**ZS300200**	PN_SWITCH F		PNスイッチF	REPEAT&LEARN,A-B REPEAT, REW,FF,PAUSE,START/STOP REGIST MEMORY BANK,1-4	
*	90	**ZS493000**	PN_SWITCH G PRINTED		PNスイッチG印刷品	CATEGORY(<<,>>)	
*	100	**ZS300300**	PN_SWITCH H		PNスイッチH	EXIT,EXECUTE	
*	110	**ZS300400**	PN_SWITCH I		PNスイッチI	PIANO ROOM,SONG/AUDIO, STYLE,VOICE,MUSIC DATABASE	
*	120	**ZS493200**	PN_SWITCH J PRINTED		PNスイッチJ印刷品	0-9,-/NO,+/YES	
*	130	**ZS300500**	PN_SWITCH K		PNスイッチK	SPLIT ON/OFF,DUAL ON/OFF, HARMONY ON/OFF	
*	140	**ZS300600**	PN_SWITCH L		PNスイッチL	FILE CONTROL,FUNCTION	
*	150	**ZR998000**	CIRCUIT BOARD	PNL	PNLシート		
*	160	**ZR998100**	CIRCUIT BOARD	PNR	PNRシート		
*	170	**ZR720100**	ENCODER KNOB	COMMON	エンコーダツマミ	DATA ENTRY	
*	180	**ZR997700**	CIRCUIT BOARD	AJACK	AJACKシート		
*	190	**ZR175300**	CIRCUIT BOARD	DM	DMシート		
*	200	**ZR997600**	CIRCUIT BOARD	DJACK	DJACKシート		
*	210	**ZR998300**	CIRCUIT BOARD	PEDAL	PEDALシート		
*	230	**ZR998500**	CIRCUIT BOARD	MVR	MVRシート		
*	240	**ZS300900**	V-KNOB		Vツマミ	MASTER VOLUME	
*	250	**ZR998400**	CIRCUIT BOARD	PWR	PWRシート		
*	260	**ZS301000**	PUSH KNOB	WHITE	プッシュツマミシロ	STANDBY/ON	
*	270	**ZR997800**	CIRCUIT BOARD	USB	USBシート		
	280	**WT788700**	BRACKET 6		ブラケット		
*	290	**ZR997900**	CIRCUIT BOARD	PB	PBシート		
	300	**VY79310R**	WHEEL ASSEMBLY		ホイールAss'y		
	300a	**VY75080R**	WHEEL		ホイール	} PITCH BEND	
	300a	**VY750810**	WHEEL		ホイール	} PITCH BEND	
	300b	**VT44010R**	SPRING		ホイールバネ		
	330	**YF221A00**	LOUD SPEAKER	5.0CM 6OHM 10W	スピーカ	Tweeter	2
*	350	**ZS297900**	CUSHION PE	30X13X1	クッションPE		4
	370	**ZR998700**	CIRCUIT BOARD	MKO	MKOシート		
*	380	**ZS301100**	LCD ASSEMBLY		液晶Ass'y		
	390	**ZC589700**	GHL KEYBOARD TEXTURE	A88 K6	GHL鍵盤黒シボD		
	410	**ZG914600**	LOWER CASE F MOLDING		下ケースF成形品		
	420	**ZF014000**	LOWER CASE L MOLDING		下ケースL成形品		
	430	**ZF014200**	LOWER CASE R MOLDING		下ケースR成形品		
	440	**V928180R**	FOOT	T1.6	ゴム脚		4
	450	**WT983300**	CUSHION	730X17X2	クッション		3
*	470	**ZU532400**	CUSHION	110X23X2	クッション(PE)		2
	600	**ZF629300**	FFC CABLE	12P 80MM P=1.0	FFCケーブル		
*	620	**ZS193600**	FFC ASSEMBLY	DJK 7P L=130 P=1.0	DJK束線		
	630	**ZF629400**	FFC CABLE	15P L=90 P=1.0	FFCケーブル		
	640	**ZF629600**	FFC CABLE	18P L=90 P=1.0	FFCケーブル		
	650	**ZF508900**	FFC ASSEMBLY	PDN 6P L=90 P=1.0	PDN束線		
	660	--	CONNECTOR ASSEMBLY	USB PH10P-PH5Px2 L=240/130	USB束線	(ZU44480)	
	670	--	CONNECTOR ASSEMBLY	TWL XH2P L=800	TWL束線	(ZF51040)	
	680	--	CONNECTOR ASSEMBLY	TWR XH3P L=1070	TWR束線	(ZF51050)	
	690	--	WIRING ASSEMBLY	PTB 3P L=755	PTB束線	(ZF51080)	
	700	--	CONNECTOR ASSEMBLY	PWR VH2P L=130	PWR束線	(ZF51010)	
	710	--	CONNECTOR ASSEMBLY	SPB XH4P L=140	SPB束線	(ZF51020)	
	730	--	WIRING ASSEMBLY	MVR 4P L=95	MVR束線	(ZF51070)	
	740	--	CONNECTOR ASSEMBLY	MIC PH3P L=140	MIC束線	(ZS20280)	
	900	**WE774300**	BIND HEAD TAPPING SCREW-B	3.0X8 MFZN2W3	Bタイト+BIND		61
	910	**WE983600**	BIND HEAD SCREW 3X8	3.0X8 MFZN2B3	小ネジ+BIND		
	920	**WF47340R**	BIND HEAD TAPPING SCREW-B	3.0X25 MFZN2W3	Bタイト+BIND		8
	930	**WE98120R**	BIND HEAD TAPPING SCREW-B	4.0X12 MFZN2W3	Bタイト+BIND		10
	940	**WJ011400**	BIND HEAD TAPPING SCREW-B	4.0X25 MFZN2W3	Bタイト+BIND		43
	950	**WF74240R**	GUIDE SCREW 6X20	6.0X20. 3-14	ガイドスクリュー		2

＊: New Parts

■ UPPER CASE ASSEMBLY

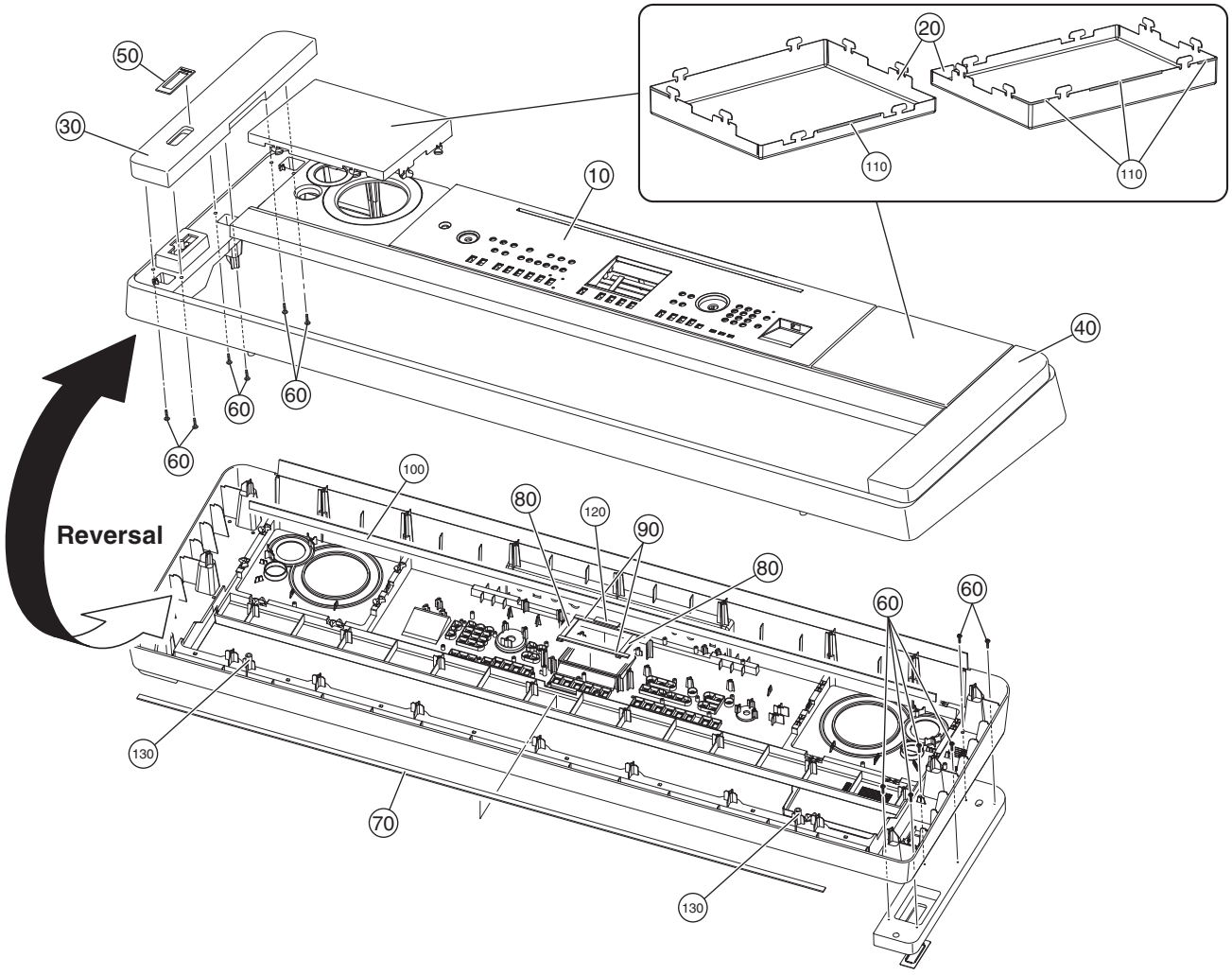

	REF NO.	PART NO.	DESCRIPTION		部品名	REMARKS	QTY
			UPPER CASE ASSEMBLY		上ケースAss'y	DGX-660B/DGX-660WH	
*		**ZS297700**	UPPER CASE ASSEMBLY		上ケースAss'y	DGX-660B	
*		**ZS297800**	UPPER CASE ASSEMBLY		上ケースAss'y	DGX-660WH	
	10	**--**	UPPER CASE PRINTED	BLACK	上ケース印刷品	DGX-660B (ZS00910)	
	10	**--**	UPPER CASE PRINTED	WHITE	上ケース印刷品	DGX-660WH (ZS00920)	
	20	**ZF014500**	SP GRILLE PAINTED	BLACK	SPグリル塗装品	DGX-660B	2
	20	**ZF014600**	SP GRILLE PAINTED	WHITE	SPグリル塗装品	DGX-660WH	2
*	30	**ZS300700**	KEY BLOCK L		拍子木L	DGX-660B	
	30	**ZF014800**	KEY BLOCK L		拍子木L	DGX-660WH	
*	40	**ZS300800**	KEY BLOCK R		拍子木R	DGX-660B	
	40	**ZF015000**	KEY BLOCK R		拍子木R	DGX-660WH	
	50	**--**	PB ESCUTCHEON_ASSEMBLY	BLACK	PBエスカAss'y	DGX-660B (ZF01510)	
	50	**--**	PB ESCUTCHEON_ASSEMBLY	WHITE	PBエスカAss'y	DGX-660WH (ZF01520)	
	60	**WE95460R**	BIND HEAD TAPPING SCREW-1	3.5X14 MFZN2W3	TP#1+BIND		12
	70	**--**	FELT		フェルト	(ZA69300)	
	80	**--**	CUSHION(PE)	80X8X2	クッション(PE)	(WH39010)	2
	90	**--**	CUSHION(PE)	125X8X2	クッション(PE)	(WH39020)	2
	100	**--**	CUSHION	1220X15X2	クッション	(WT98140)	
	110	**--**	NONWOVEN CLOTH	60X6X0.55T	不織布	(WZ70480)	8
	120	**--**	NONWOVEN_F_CLOTH	28X10X0.55	不織布	(WD26380)	
	130	**--**	NONWOVEN CLOTH	35X15X0.35	不織布	(ZU31870)	

* : New Parts

■ BOTTOM BOARD ASSEMBLY

• **Top view 1**

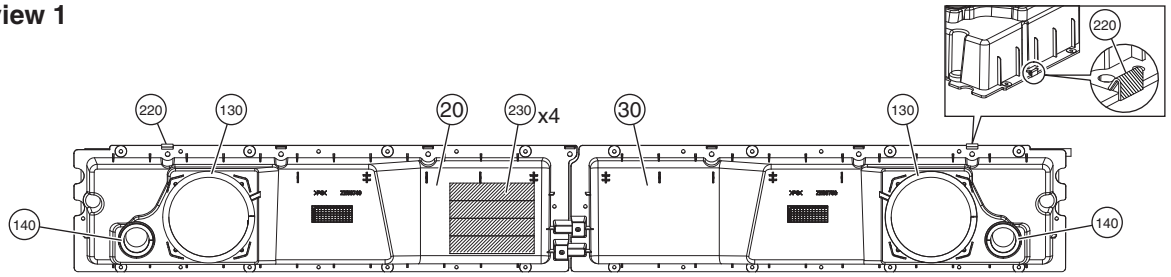

• **Bottom view**

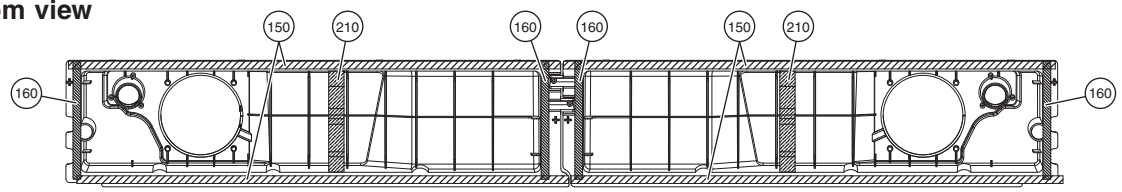

• **Top view 2**

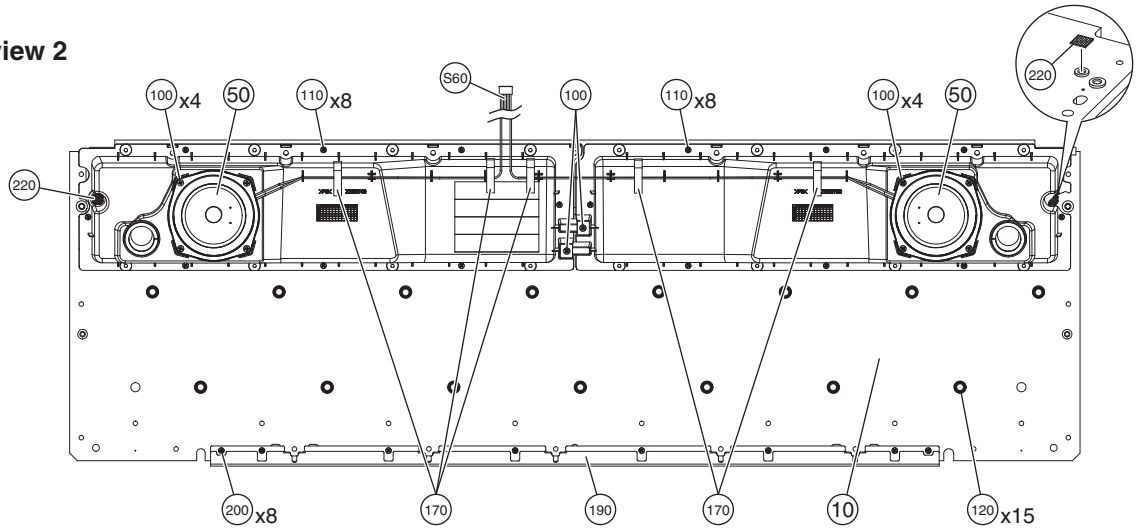

REF NO.	PART NO.	DESCRIPTION		部品名	REMARKS	QTY
		BOTTOM BOARD ASSEMBLY		底板Ａｓｓ’ｙ	DGX-660B/DGX-660WH	
*	**ZS298100**	BOTTOM BOARD ASSEMBLY	DGX-660B/WH	底板Ａｓｓ’ｙ		
10	**--**	BOTTOM SUB ASSEMBLY		底板木部集成	(ZF01530)	
20	**--**	SPEAKER BOX L		スピーカーボックスL	(ZE59740)	
30	**--**	SPEAKER BOX R		スピーカーボックスR	(ZE59750)	
50	**YF014A00**	LOUD SPEAKER	12.0CM 4 OHM 10W	スピーカー	Woofer	2
S60	**--**	CONNECTOR ASSEMBLY	SPA XH4P L=600/760	ＳＰＡ束線	(ZF51030)	
100	**WE99860R**	BIND HEAD TAPPING SCREW-B	4.0X12 MFZN2B3	Ｂタイト＋ＢＩＮＤ		10
110	**WE95460R**	BIND HEAD TAPPING SCREW-1	3.5X14 MFZN2W3	ＴＰ＃１＋ＢＩＮＤ		16
120	**--**	SPACER		スペーサ	(WU17530)	15
130	**--**	CUSHION(PE) 360X5XT1	PEFU 360X5XT2	クッション（ＰＥ）	(WF26940)	2
140	**--**	CUSHION	130X5X5	クッション	(WU17520)	2
150	**--**	CUSHION(PE)	642X10X1	クッション（ＰＥ）	(WT98180)	4
160	**--**	CUSHION(PE)	160X10X1	クッション（ＰＥ）	(WT98190)	4
170	**--**	FILAMENT TAPE	12X50	粘着テープ	(VA12610)	5
190	**--**	SUPPORT FRONT RAIL	2	サポート金具	(ZA39270)	
200	**WE97090R**	BIND HEAD TAPPING SCREW-1	3.5X12 MFZN2W3	ＴＰ＃１＋ＢＩＮＤ		8
210	**--**	SPONGE	CALMFLEX F-2	吸音スポンジ	(ZG15180)	2
220	**--**	CUSHION G	PEFU 15X15 T1	クッション G	(WH93670)	4
230	**--**	CUSHION(PE)	PEFU 110X23X2	クッション（ＰＥ）	(ZU53240)	4

＊: New Parts

■ KEYBOARD ASSEMBLY

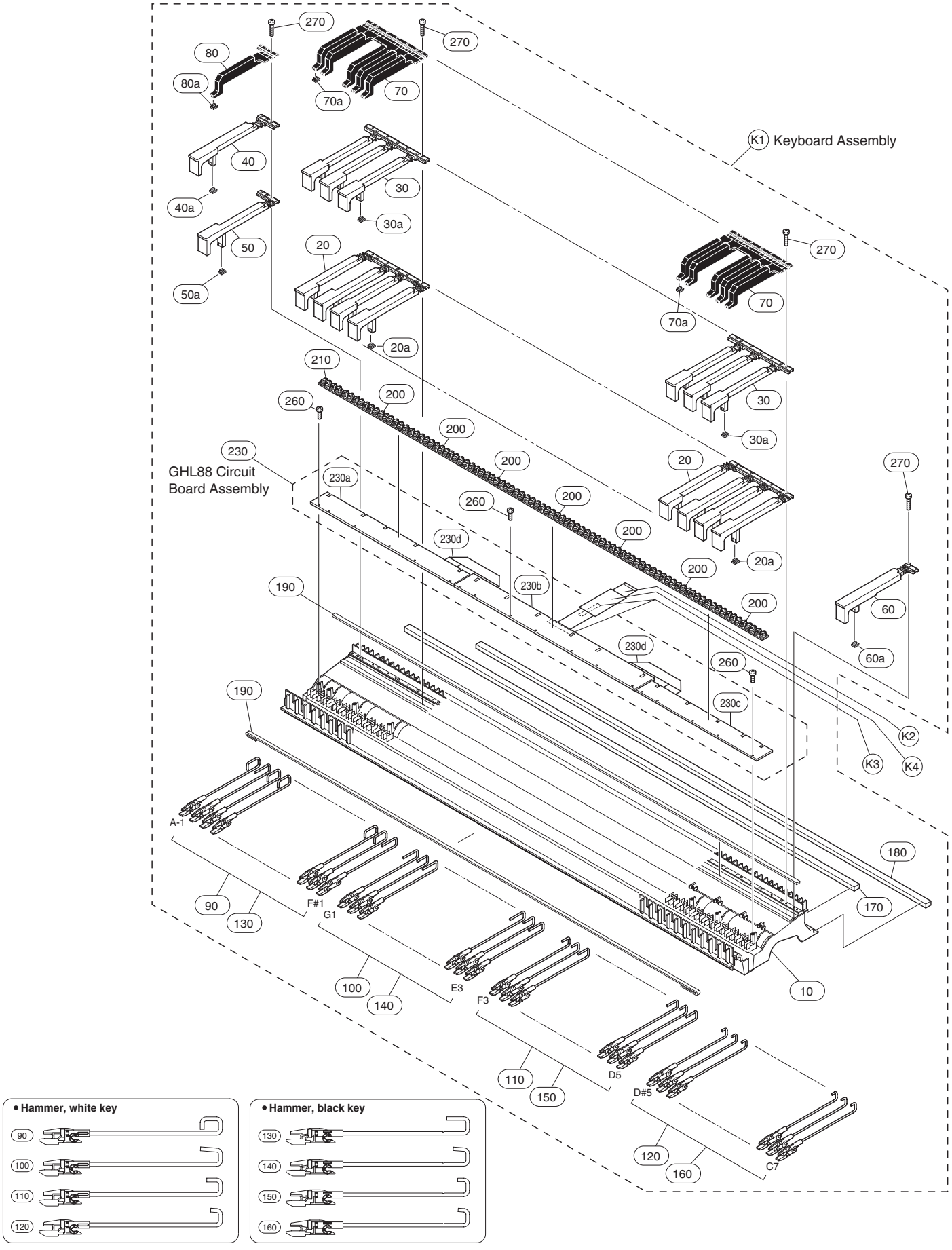

REF NO.	PART NO.	DESCRIPTION		部品名	REMARKS	QTY
		KEYBOARD ASSEMBLY		GHL鍵盤Ass'y	DGX-660B/DGX-660WH	
	ZC589700	GHL KEYBOARD TEXTURE	A88 K6	GHL鍵盤黒シボD		
K1	**--**	GHL B TEXTURE ASSEMBLY	A88 K6	GHL黒シボAss'y	(WM95930)	
K2	**MFA27350**	FFC	27P L=350 P=1.0	カードー電線		
K2	**WG318100**	FFC	27P FWR-P=1.0-K1 L=350	カードー電線		
K3	**--**	FILAMENT TAPE	12X60	粘着テープ	(VM72270)	2
K4	**--**	SPONGE13		防振スポンジ13	(WK89530)	
	--	GHL B TEXTURE ASSEMBLY	A88 K6	GHL黒シボAss'y	(WM95930)	
10	**--**	KEYBOARD FRAME GHL	A88	フレーム88改	(WJ02700)	
20	**WJ029600**	WHITE KEYS	CEGB	白鍵CEGB改		
20a	**WG43760R**	ACTUATE RUBBER	GHL	駆動ラバー		4
20a	**WN742300**	ACTUATE RUBBER	GHL	駆動ラバー		4
30	**WJ029700**	WHITE KEYS	DFA	白鍵DFA改		
30a	**WG43760R**	ACTUATE RUBBER	GHL	駆動ラバー		3
30a	**WN742300**	ACTUATE RUBBER	GHL	駆動ラバー		3
70	**WM812400**	BLACK KEY TEXTURE		黒鍵シボ		
70a	**WG43760R**	ACTUATE RUBBER	GHL	駆動ラバー		5
70a	**WN742300**	ACTUATE RUBBER	GHL	駆動ラバー		5
40	**WJ029900**	WHITE KEY	A	白鍵A改		
40a	**WG43760R**	ACTUATE RUBBER	GHL	駆動ラバー		
40a	**WN742300**	ACTUATE RUBBER	GHL	駆動ラバー		
50	**WJ030000**	WHITE KEY	B	白鍵B改		
50a	**WG43760R**	ACTUATE RUBBER	GHL	駆動ラバー		
50a	**WN742300**	ACTUATE RUBBER	GHL	駆動ラバー		
60	**WJ030100**	WHITE KEY	C	白鍵C改		
60a	**WG43760R**	ACTUATE RUBBER	GHL	駆動ラバー		
60a	**WN742300**	ACTUATE RUBBER	GHL	駆動ラバー		
80	**WN045100**	BLACK KEY TEXTURE	A#	黒鍵シボA#		
80a	**WG43760R**	ACTUATE RUBBER	GHL	駆動ラバー		
80a	**WN742300**	ACTUATE RUBBER	GHL	駆動ラバー		
90	**WF15140R**	HAMMER ASSEMBLY, WHITE KEY	W1	ハンマーW1		13
100	**WF15150R**	HAMMER ASSEMBLY, WHITE KEY	W2	ハンマーW2		13
110	**WF15160R**	HAMMER ASSEMBLY, WHITE KEY	W3	ハンマーW3		13
120	**WF15170R**	HAMMER ASSEMBLY, WHITE KEY	W4	ハンマーW4		13
130	**WF15180R**	HAMMER ASSEMBLY,	B1	ハンマーB1		9
140	**WF15190R**	HAMMER ASSEMBLY,	B2	ハンマーB2		9
150	**WF15200R**	HAMMER ASSEMBLY,	B3	ハンマーB3		9
160	**WF15210R**	HAMMER ASSEMBLY,	B4	ハンマーB4		9
170	**WF21200R**	STOPPER U88	1226 11 A88,ADHESI	ストッパーU88		
180	**WK688700**	STOPPER L88		ストッパーL88		
190	**WF211900**	LIMIT STOPPER	88	リミットストッパー		
200	**WF212202**	RUBBER CONTACT	GHL OCT 2M	接点ゴムOCT		7
210	**WF212402**	RUBBER CONTACT A-CGHL	GHL A-C 2M	接点ゴムA-C		
230	**WG317500**	CIRCUIT BOARD	GHL88	GHL88シート		
230a	**WF21250R**	CIRCUIT BOARD GHL88L	88L	GHL88シートL		
230b	**WF21260R**	CIRCUIT BOARD GHL88M	88M	GHL88シートM		
230c	**WF21280R**	CIRCUIT BOARD GHL88H	88H	GHL88シートH		
230d	**WF212900**	WIRING ASSEMBLY	17P L=157 P=2.0	中継束線		2
260	**WF267300**	BIND HEAD P-TIGHT SCREW	2.6X8 MFZN2W3	Pタイト+BIND		18
270	**WE973000**	BIND HEAD TAPPING SCREW-P	3.0X16 MFZN2W3	Pタイト+BIND		31

＊: New Parts

■ ELECTRICAL PARTS

AJACK,DJACK,PB,USB

	REF NO.	PART NO.	DESCRIPTION		部品名	REMARKS	QTY
			ELECTRICAL PARTS		電気部品	DGX660B/DGX660WH	
*		**ZR997600**	CIRCUIT BOARD	DJACK	DJACKシート	(ZR17520)(YH202C0)	
*		**ZR997700**	CIRCUIT BOARD	AJACK	AJACKシート	(ZR17520)(YH202C0)	
*		**ZR997800**	CIRCUIT BOARD	USB	USBシート	(ZR17520)(YH202C0)	
*		**ZR997900**	CIRCUIT BOARD	PB	PBシート	(ZR17520)(YH202C0)	
*		**ZR998000**	CIRCUIT BOARD	PNL	PNLシート	(ZR99480)(YE943C0)	
*		**ZR998100**	CIRCUIT BOARD	PNR	PNRシート	(ZR99480)(YE943C0)	
*		**ZR998300**	CIRCUIT BOARD	PEDAL	PEDALシート	(ZR99480)(YE943C0)	
*		**ZR998400**	CIRCUIT BOARD	PWR	PWRシート	(ZR99480)(YE943C0)	
*		**ZR998500**	CIRCUIT BOARD	MVR	MVRシート	(ZR99480)(YE943C0)	
		ZR998700	CIRCUIT BOARD	MKO	MKOシート	(ZR99480)(YE943C0)	
*		**ZR175300**	CIRCUIT BOARD	DM	DMシート	(ZT15330)(YH201C0)	
		WF21250R	CIRCUIT BOARD	GHL88L	GHL88シートL	(WF46230)(X6244D0)	
		WF21260R	CIRCUIT BOARD	GHL88M	GHL88シートM	(WF46240)(X6245G0)	
		WF21280R	CIRCUIT BOARD	GHL88H	GHL88シートH	(WF46250)(X6246D0)	
*		**ZR997600**	CIRCUIT BOARD	DJACK	DJACKシート	(ZR17520)(YH202C0)	
*		**ZR997700**	CIRCUIT BOARD	AJACK	AJACKシート	(ZR17520)(YH202C0)	
*		**ZR997800**	CIRCUIT BOARD	USB	USBシート	(ZR17520)(YH202C0)	
*		**ZR997900**	CIRCUIT BOARD	PB	PBシート	(ZR17520)(YH202C0)	
	70	**--**	FUSE HOLDER	PIN TP00526-31	ヒューズホルダ	(WQ77880)	2
	80	**--**	NONWOVENS	35_3	不織布	(WC45010)	3
	90	**--**	NONWOVEN FABRIC	50X3X0.35	不織布	(WH21960)	
	C544	**UR749470**	ELECTROLYTIC CAPACITOR	4700 25.0V FORM.	ケミコン		
⚠	D1	**WV008801**	DIODE	2A02-A0 TE- 52	ダイオード		
	FT1	**ZA675500**	FET KB-290	TJ20A10M3 SUTO	FET		
⚠	FZ1	**KB000690**	FUSE 2.5AT	T L 2.50A S	ヒューズ250V		
	JK201	**WJ306200**	CONNECTOR	MSJ-064-15A B AG	ホーンコネクタ	PHONES/OUTPUT	
	JK301	**VM57600R**	CONNECTOR	JACK YKB21-5074	ホーンコネクタ（黒）	SUSTAIN	
	JK301	**ZF180800**	CONNECTOR	JACK JY-6314-01-34	ホーンコネクタ	SUSTAIN	
	JK302	**V6802600**	CONNECTOR	USB 4P SE	USBジャック	USB TO HOST	
	JK303	**WH382500**	CONNECTOR	UAR27 4P SE	USBコネクタ	USB TO DEVICE	
⚠	JK303	**WK450700**	CONNECTOR	YKF45-0033N 4P SE	USBコネクタ	USB TO DEVICE	
	JK305	**WZ704401**	CONNECTOR	DC-502-AG-PBT-2.0-	電源コネクタ	DC-IN	
	JK306	**V9280100**	CONNECTOR	JY-3535-01-070	フォーンジャックミニ	AUX IN	
	JK306	**ZA590000**	CONNECTOR	JACK MINI STEREO	ホーンコネクタ	AUX IN	
	JK306	**ZF179900**	CONNECTOR	MINI JACK HTJ-035-	ミニジャック	AUX IN	
	JK601	**WJ306200**	CONNECTOR	MSJ-064-15A B AG	ホーンコネクタ	MIC IN	
	VR301	**VV04910R**	ROTARY VARIABLE RESISTOR	B 10K RK09K1110	ロータリーVR	CONTRAST	
	VR401	**WZ510000**	ROTARY VARIABLE RESISTOR	B 10.0K RK11K1110D	ロータリーVR	PITCH BEND	
	VR601	**ZA774900**	ROTARY VARIABLE RESISTOR	A 10.0K RK09K1110D	ロータリーVR	MIC VOLUME	
	IC4	**YA326A00**	IC	BA4580RF-E2 OPAMP	アンプIC SOP	OPAMP	
	IC601	**YA326A00**	IC	BA4580RF-E2 OPAMP	アンプIC SOP	OPAMP	
*	IC602	**YD315A00**	IC	R1154N090B-TR-FE	電源IC	VOLTAGE REGULATOR +9.0V	
	R333	**RD155120**	CARBON RESISTOR (CHIP)	120.0 1/4 J TP	チップ抵抗		
	-335	**RD155120**	CARBON RESISTOR (CHIP)	120.0 1/4 J TP	チップ抵抗		
	C519	**UR838101**	ELECTROLYTIC CAPACITOR	100.00 16.0V RX TP	ケミコン		
	C521	**UR867100**	ELECTROLYTIC CAPACITOR	10.00 50.0V RX TP	ケミコン		
	C522	**UR867100**	ELECTROLYTIC CAPACITOR	10.00 50.0V RX TP	ケミコン		
	C525	**UN867100**	ELECTROLYTIC CAPACITOR BP	10.00 50.0V RX TP	BPケミコン		
	C532	**UN867100**	ELECTROLYTIC CAPACITOR BP	10.00 50.0V RX TP	BPケミコン		
	C551	**UN866330**	ELECTROLYTIC CAPACITOR BP	3.30 50.0V RX TP	BPケミコン		
	C552	**UN866330**	ELECTROLYTIC CAPACITOR BP	3.30 50.0V RX TP	BPケミコン		
	C603	**UR866100**	ELECTROLYTIC CAPACITOR	1.00 50.0V RX TP	ケミコン		
	C607	**UR866470**	ELECTROLYTIC CAPACITOR	4.70 50.0V RX TP	ケミコン		
	C608	**UR866100**	ELECTROLYTIC CAPACITOR	1.00 50.0V RX TP	ケミコン		
	C609	**UR866100**	ELECTROLYTIC CAPACITOR	1.00 50.0V RX TP	ケミコン		
	C613	**UN866470**	ELECTROLYTIC CAPACITOR BP	4.70 50.0V RX TP	BPケミコン		
	C618	**UR838101**	ELECTROLYTIC CAPACITOR	100.00 16.0V RX TP	ケミコン		
	TR301	**V2797700**	TRANSISTOR	2SC5395-T112-E/F	トランジスタ 2SC		
	TR301	**WC398400**	TRANSISTOR	2N5551C-AT/P	トランジスタ		
	TR302	**V2797700**	TRANSISTOR	2SC5395-T112-E/F	トランジスタ 2SC		
	TR302	**WC398400**	TRANSISTOR	2N5551C-AT/P	トランジスタ		
	R301	**HF456180**	CARBON RESISTOR	1.8K 1/4 J AX TP	カーボン抵抗		
	R302	**HF457330**	CARBON RESISTOR	33.0K 1/4 J AX TP	カーボン抵抗		
	R303	**HF456470**	CARBON RESISTOR	4.7K 1/4 J AX TP	カーボン抵抗		
	R323	**HF457470**	CARBON RESISTOR	47.0K 1/4 J AX TP	カーボン抵抗		
	R325	**HF456330**	CARBON RESISTOR	3.3K 1/4 J AX TP	カーボン抵抗		
	R327	**HF457470**	CARBON RESISTOR	47.0K 1/4 J AX TP	カーボン抵抗		

＊ : New Parts

AJACK,DJACK,PB,USB,DM

	REF NO.	PART NO.	DESCRIPTION		部品名	REMARKS	QTY
	R328	**HF457180**	CARBON RESISTOR	18.0K 1/4 J AX TP	カーボン抵抗		
		ZR998700	CIRCUIT BOARD	MKO	MKOシート	(ZR99480)(YE943C0)	
*		**ZR998000**	CIRCUIT BOARD	PNL	PNLシート	(ZR99480)(YE943C0)	
*		**ZR998100**	CIRCUIT BOARD	PNR	PNRシート	(ZR99480)(YE943C0)	
*		**ZR998300**	CIRCUIT BOARD	PEDAL	PEDALシート	(ZR99480)(YE943C0)	
*		**ZR998400**	CIRCUIT BOARD	PWR	PWRシート	(ZR99480)(YE943C0)	
*		**ZR998500**	CIRCUIT BOARD	MVR	MVRシート	(ZR99480)(YE943C0)	
	D1	**VB941201**	DIODE	1SS133,1SS176 TE-5	ダイオード		
	-8	**VB941201**	DIODE	1SS133,1SS176 TE-5	ダイオード		
	EC1	**VU48130R**	ENCODER REB161-PVB-15FH1NA	REB161(9X5)PVB15FH	16形エンコーダ		
	JK701	**V487480R**	CONNECTOR	DINJACK6P MD-S6130	ミニDINコネクタ		
	LD1	**WG913200**	LED	BL-BEG201-LC22-21-	2色LED		
	LD2	**WU175600**	LED	BL-B2141K-24F-FP7-	LED		
	LD3	**WU175600**	LED	BL-B2141K-24F-FP7-	LED		
	LD4	**WU175600**	LED	BL-B2141K-24F-FP7-	LED		
	R1	**HF454270**	CARBON RESISTOR	27.0 1/4 J AX TP	カーボン抵抗		
	R2	**HF45418R**	CARBON RESISTOR	18.0 1/4 J AX TP	カーボン抵抗		
	R3	**HF455100**	CARBON RESISTOR	100.0 1/4 J AX TP	カーボン抵抗		
	-5	**HF455100**	CARBON RESISTOR	100.0 1/4 J AX TP	カーボン抵抗		
	SW64	**WZ033500**	SWITCH PUSH	ESE20D421	プッシュSW		
	VR603	**WN157800**	VR DUAL UNIT ROTARY	B 20.0K XV012313YG	2連ロータリーVR	}	
	VR603	**ZE294900**	VR DUAL UNIT ROTARY	B 20.0K XV012323YG	2連ロータリーVR	}	
	WH102	**--**	WIRING ASSEMBLY	SSW 2P L=150	SSW束線	(ZF51060)	
*		**ZR175300**	CIRCUIT BOARD	DM	DMシート	(ZT15330)(YH201C0)	
	IC001	**YA326A00**	IC	BA4580RF-E2 OPAMP	アンプIC SOP	OPAMP	
	IC002	**YD235A00**	IC	R5524N002A-TR-FE	電源IC	USB HIGHSIDEPOWERSWITCH	
	IC006	**X5422A00**	IC	S1D13700F01A100 LC	CPU／周辺IC	LCD CONTROLLER	
*	IC007	**YH235B00**	IC	PRG #3542	書込済ROM	PROGAMMED ROM	
	IC017	**YE238A00**	IC	RP132H121D-T1-FE 1	電源IC	VOLTAGE REGULATOR +1.2V	
	IC019	**YD113A00**	IC	RP131H331D-T1-FE 3	電源IC	VOLTAGE REGULATOR +3.3V	
	IC024	**X9347A00**	IC	R3112N291A-TR-FE	電源検出IC	VOLTAGE DETECTOR REST	
*	IC028	**YH236B00**	IC	WAV #3542	書込済ROM	WAVE ROM	
	IC035	**YD652A00**	IC	YDA164C-QZE2	ICデジタル	DIGITAL AMP	
	IC401	**X5049A0R**	IC	NJM4556AM-TE1	アンプICSOP	OPAMP	
	IC403	**YA326A00**	IC	BA4580RF-E2 OPAMP	アンプICSOP	OPAMP	
	R414	**RD154390**	CARBON RESISTOR (CHIP)	39.0 1/4 J TP	チップ抵抗		
	R416	**RD154390**	CARBON RESISTOR (CHIP)	39.0 1/4 J TP	チップ抵抗		
	TR403	**VD303700**	TRANSISTOR	2SC3326 -A,B(TE85R	トランジスタ 2SC		
	TR404	**VD303700**	TRANSISTOR	2SC3326 -A,B(TE85R	トランジスタ 2SC		
	TR403	**WC883401**	TRANSISTOR	2704 K TP	トランジスタ 2SD		
	TR404	**WC883401**	TRANSISTOR	2704 K TP	トランジスタ 2SD		
	C011	**UF037100**	ELECTROLYTIC CAPACITOR(CHIP)	10 16V	チップケミコン		
	C023	**UF038100**	CAPACITOR	100 16V	チップケミコン		
	C074	**UF037100**	ELECTROLYTIC CAPACITOR(CHIP)	10 16V	チップケミコン		
	C080	**UF037100**	ELECTROLYTIC CAPACITOR(CHIP)	10 16V	チップケミコン		
	-82	**UF037100**	ELECTROLYTIC CAPACITOR(CHIP)	10 16V	チップケミコン		
	C092	**WB29110R**	CAPACITOR	35V EEE1VA101UP	チップケミコン		
	C095	**WB51600R**	CAPACITOR	100 6.3V EEEFK0J10	チップケミコン		
	C098	**WC370000**	ELECTROLYTIC CAPACITOR	220.00 35.0V	チップケミコン UD		
	C104	**UF038100**	CAPACITOR	100 16V	チップケミコン		
	C111	**UF148101**	CAPACITOR	100 25V	チップケミコン		
	C112	**WN562400**	ELECTROLYTIC CAPACITOR	220.00 16.0V	チップケミコン UD		
	C303	**UF038100**	CAPACITOR	100 16V	チップケミコン		
	C306	**UF037100**	ELECTROLYTIC CAPACITOR(CHIP)	10 16V	チップケミコン		
	C307	**UF037100**	ELECTROLYTIC CAPACITOR(CHIP)	10 16V	チップケミコン		
	C401	**UF038100**	CAPACITOR	100 16V	チップケミコン		
	C403	**UF037100**	ELECTROLYTIC CAPACITOR(CHIP)	10 16V	チップケミコン		
	C407	**UF038100**	CAPACITOR	100 16V	チップケミコン		
	C409	**UF037100**	ELECTROLYTIC CAPACITOR(CHIP)	10 16V	チップケミコン		
	C413	**UF038100**	CAPACITOR	100 16V	チップケミコン		
	C414	**UF148101**	CAPACITOR	100 25V	チップケミコン		
	C418	**UF037100**	ELECTROLYTIC CAPACITOR(CHIP)	10 16V	チップケミコン		
	C420	**UF037100**	ELECTROLYTIC CAPACITOR(CHIP)	10 16V	チップケミコン		
	C422	**UF037100**	ELECTROLYTIC CAPACITOR(CHIP)	10 16V	チップケミコン		
	C424	**UF037100**	ELECTROLYTIC CAPACITOR(CHIP)	10 16V	チップケミコン		
	C427	**UF038100**	CAPACITOR	100 16V	チップケミコン		
	C428	**UF037100**	ELECTROLYTIC CAPACITOR(CHIP)	10 16V	チップケミコン		

＊: New Parts

DM

	REF NO.	PART NO.	DESCRIPTION		部品名	REMARKS	QTY
	C432	**UF037100**	ELECTROLYTIC CAPACITOR(CHIP)	10 16V	チップケミコン		
	D003	**V2376600**	DIODE	RB500V-40 TAPING	ショットキダイオード		
	D004	**ZF597600**	DIODE	DA2J10100L	ダイオード		
	-11	**ZF597600**	DIODE	DA2J10100L	ダイオード		
	D012	**WM940400**	DIODE	RB070M-30TR TP	ダイオード		
	IC008	**X3294A00**	IC	MC34063ECD-TR	電源IC		
	IC015	**YH390A00**	IC	AK4430	ICDAC		
	IC016	**X7357B00**	IC	PCM1803ADBR	IC		
	IC020	**YD832A00**	IC	R1245K003G-TR	電源IC		
	IC023	**--**	IC	R8A02042BG	CPU／周辺IC	(YC479A0)	
	IC026	**X6970E00**	IC	M12L128168A-6TG2N	メモリIC 128M		
	IC027	**X6970E00**	IC	M12L128168A-6TG2N	メモリIC 128M		
	IC031	**X5665D00**	IC	M12L64164A-7TG2Y	メモリIC 64M	}	
	IC031	**YF587A00**	IC	EM638165TSD-6G	メモリIC 64M	}	
	IC402	**X7357B00**	IC	PCM1803ADBR	IC		
*	IC501	**YC778E00**	IC	89FM42AUG-7R13(CJZ	CPU／周辺IC		
	R011	**RD15310R**	CARBON RESISTOR (CHIP)	1.0 1/4 J TP	チップ抵抗		
	-13	**RD15310R**	CARBON RESISTOR (CHIP)	1.0 1/4 J TP	チップ抵抗		
	R014	**RA156820**	CARBON RESISTOR (CHIP)	8.2K 63M D RECT.	チップ金被抵抗		
	R015	**RA156150**	CARBON RESISTOR (CHIP)	1.5K 63M D RECT.	チップ金被抵抗		
	R179	**RA154220**	CARBON RESISTOR (CHIP)	22.0 63M D RECT.	チップ金被抵抗		
	-182	**RA154220**	CARBON RESISTOR (CHIP)	22.0 63M D RECT.	チップ金被抵抗		
	TA001	**WN120100**	DIGITAL TRANSISTOR	RT2N14M-T111-1	デジタルトランジスタ		
	TA002	**WY779500**	DIGITAL TRANSISTOR	UMB10N TN	デジタルトランジスタ		
	-5	**WY779500**	DIGITAL TRANSISTOR	UMB10N TN	デジタルトランジスタ		
	TH1	**V326060R**	POLY-SWITCH MINISMD035-2	MICROSMD035F-2 SMD	ポリスイッチ		
	TR005	**WW782200**	DIGITAL TRANSISTOR	DTC023JUBTL	デジタルトランジスタ		
	TR006	**WG989900**	DIGITAL TRANSISTOR	KRA226S-RTK/P	デジタルトランジスタ		
	TR007	**WW782200**	DIGITAL TRANSISTOR	DTC023JUBTL	デジタルトランジスタ		
	TR401	**VV556401**	TRANSISTOR	2412K Q,R,S TP	トランジスタ 2SC		
	TR402	**VV556501**	TRANSISTOR	1037AK Q,R,S TP	トランジスタ 2SA		
	TR405	**VV556401**	TRANSISTOR	2412K Q,R,S TP	トランジスタ 2SC		
	X001	**V9864200**	CERAMIC RESONATOR	10.0M CSTCE10M0G52	セラミック発振子		
	X002	**ZP547600**	R QUARTZ 48MHz	48M DSO221SHF 48MH	水晶発振器		
	X003	**WM135200**	RESONATOR QUARTZ	16.9344M DSX321G	水晶振動子		
		WF21250R	CIRCUIT BOARD	GHL88L	GHL88シートL	(WF46230)(X6244D0)	
	D1	**VB941201**	DIODE	1SS133,1SS176 TE-5	ダイオード		
	D5	**VB941201**	DIODE	1SS133,1SS176 TE-5	ダイオード		
	-60	**VB941201**	DIODE	1SS133,1SS176 TE-5	ダイオード		
		WF21260R	CIRCUIT BOARD	GHL88M	GHL88シートM	(WF46240)(X6245G0)	
	D1	**VB941201**	DIODE	1SS133,1SS176 TE-5	ダイオード		
	-72	**VB941201**	DIODE	1SS133,1SS176 TE-5	ダイオード		
		WF21280R	CIRCUIT BOARD	GHL88H	GHL88シートH	(WF46250)(X6246D0)	
	D1	**VB941201**	DIODE	1SS133,1SS176 TE-5	ダイオード		
	-48	**VB941201**	DIODE	1SS133,1SS176 TE-5	ダイオード		
	330	**YF221A00**	LOUD SPEAKER	5.0CM 6OHM 10W	スピーカ	Tweeter	2
	50	**YF014A00**	LOUD SPEAKER	12.0CM 4 OHM 10W	スピーカー	Woofer	2
		--	LCD UNIT		液晶ユニット	(ZT21070)	
⚠ *		**ZS390400**	AC ADAPTOR SET	PA-150B E	ACアダプター	E,I	
⚠ *		**ZS390300**	AC ADAPTOR SET	PA-150B B	ACアダプター	B	
⚠		**WK014700**	AC ADAPTOR	PA-150U U	ACアダプター	U,C	
⚠ *		**ZS390200**	AC ADAPTOR SET	PA-150B K	ACアダプター	K	
⚠ *		**ZN031100**	AC ADAPTOR SET	PA-150B BRA	ACアダプター	P	
⚠ *		**ZN640000**	AC ADAPTOR SET	PA-150B A	ACアダプター	A	
⚠ *		**ZM962000**	AC ADAPTOR SET	PA-150B CHN	ACアダプター	O	
⚠ *		**ZU723100**	AC ADAPTOR SET	PA-150B IN	ACアダプター	Z	

* : New Parts

PortableGrand

DGX-660B/DGX-660WH

OVERALL CIRCUIT DIAGRAM

● OVERALL CIRCUIT DIAGRAM 1/7 (DM (1/4)) 1
OVERALL CIRCUIT DIAGRAM 2/7 (DM (2/4)) 2
● OVERALL CIRCUIT DIAGRAM 3/7 (DM (3/4)) 3
OVERALL CIRCUIT DIAGRAM 4/7 (DM (4/4)) 4
● OVERALL CIRCUIT DIAGRAM 5/7 (AJACK, MVR, PB, PWR) 5
OVERALL CIRCUIT DIAGRAM 6/7 (DJACK, ENC, PEDAL, PNL, PNR, USB) 6
● OVERALL CIRCUIT DIAGRAM 7/7 (GHL88H, GHL88L, GHL88M) 7

CL 001927

YAMAHA
HAMAMATSU, JAPAN
Printed in Japan '14.02

■ DGX-660B/DGX-660WH OVERALL CIRCUIT DIAGRAM 1/7 (DM (1/4))

DM 1/4

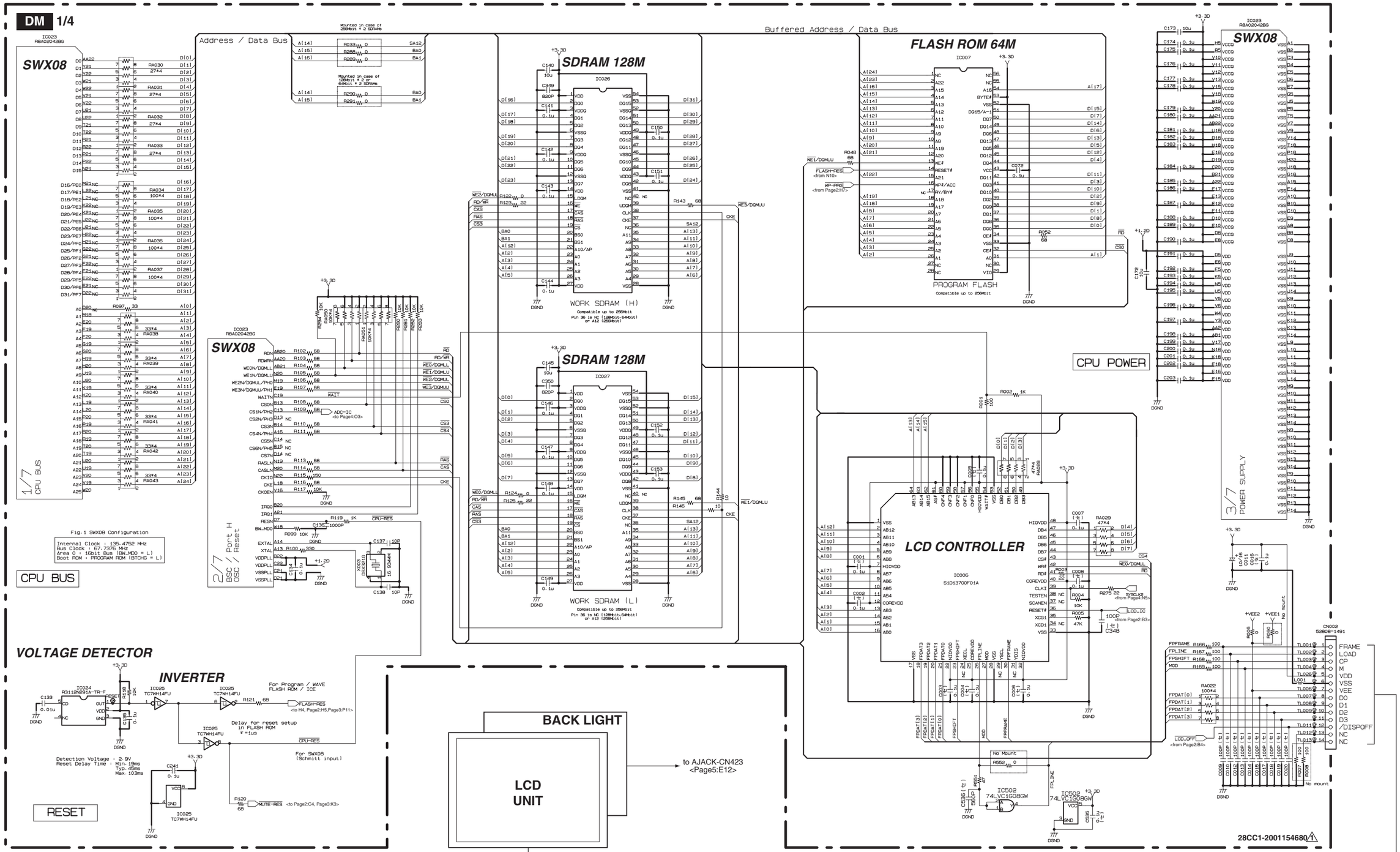

■ DGX-660B/DGX-660WH OVERALL CIRCUIT DIAGRAM 2/7 (DM (2/4))

DM 2/4

GHSIF

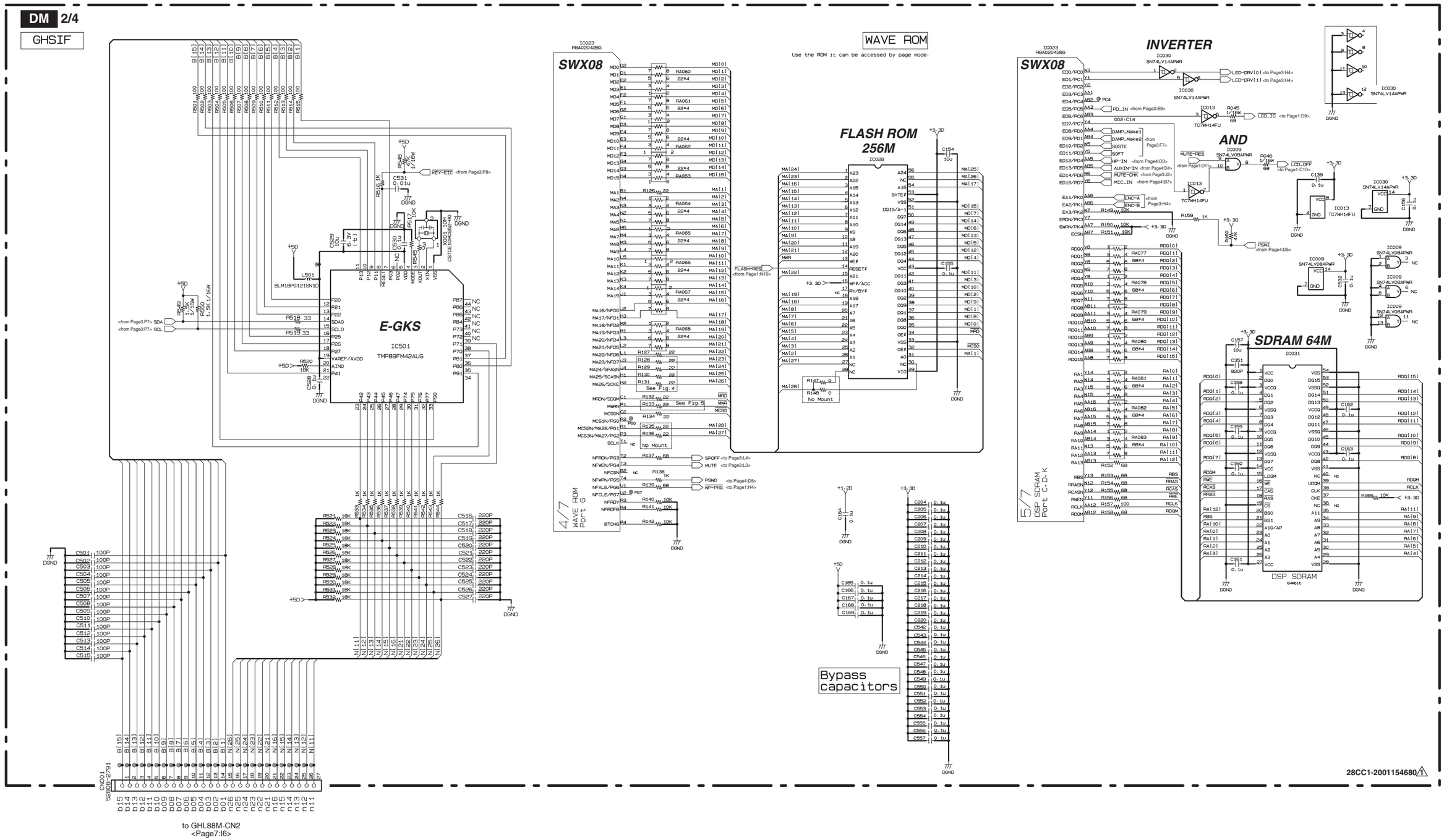

■ DGX-660B/DGX-660WH OVERALL CIRCUIT DIAGRAM 3/7 (DM (3/4))

DM 3/4

MULTIVIBRATOR

INVERTER

AND

SWX08

DC/DC CONVERTER

USB HIGH-SIDE POWER SW

6/7 USB / AD / Test E-Bus / Port A-B

TEST

to PNL-CN1 <Page6:B3>

to PNR-CN2 <Page6:B9>

to PEDAL-CN701 <Page6:O3>

to DJACK-CN410 <Page6:L7>

to USB-CN411 <Page6:L11>

to DJACK-CN409 <Page6:L8>

28CC1-2001154680-1

■ DGX-660B/DGX-660WH OVERALL CIRCUIT DIAGRAM 4/7 (DM (4/4))

DM 4/4

REGULATOR +1.2V

Output Current Max : 1000mA
Assumption Load Current : 100mA

IC017 RP132H121D-T1-FE

REGULATOR +3.3V

Output Current Max : 1000mA
Assumption Load Current : 400mA

IC019 RP131H331D-T1-F

DC/DC CONVERTER

IC020 R1245K003G-TR
Fosc=2.4MHz (Typ.)

SWX08

IC013 TC7W14FU

IC023 RBA02042BG

Audio Data Format : 24bit I2C

ADC

IC016 PCM1803ADBR

IC402 PCM1803ADBR

MCLK=256fs
fs=44.1KHz
Data fomat : I2C
HPF on
Slave Mode

DAC

IC015 AK4430

Audio Format : I2S
DIF H : I2S
L : Left justified

OP AMP

FC : 49.4KHz

IC001 BA4580RF-E2

IC403 BA4580RF-E2

HEADPHONE AMP

LCF : fc=22.9Hz
HCF : fc=22.0kHz
Gain : 0.79dB

POWER AMP 20Wx2

IC035 YDA164C-GZE2

Gain settings

Limit Setting
Case : No limit
R245 0Ω
R243 NoMount
Case : Limited to 10W (8Ω)
R245 22kΩ
R243 33kΩ

to AJACK-CN422 <Page5:N7>

to AJACK-CN402 <Page5:N8>

to AJACK-CN601 <Page5:P3>

to AJACK-CN415 <Page5:G2>

28CC1-2001154680

DGX-660B/DGX-660WH

■ DGX-660B/DGX-660WH OVERALL CIRCUIT DIAGRAM 5/7 (AJACK, MVR, PB, PWR)

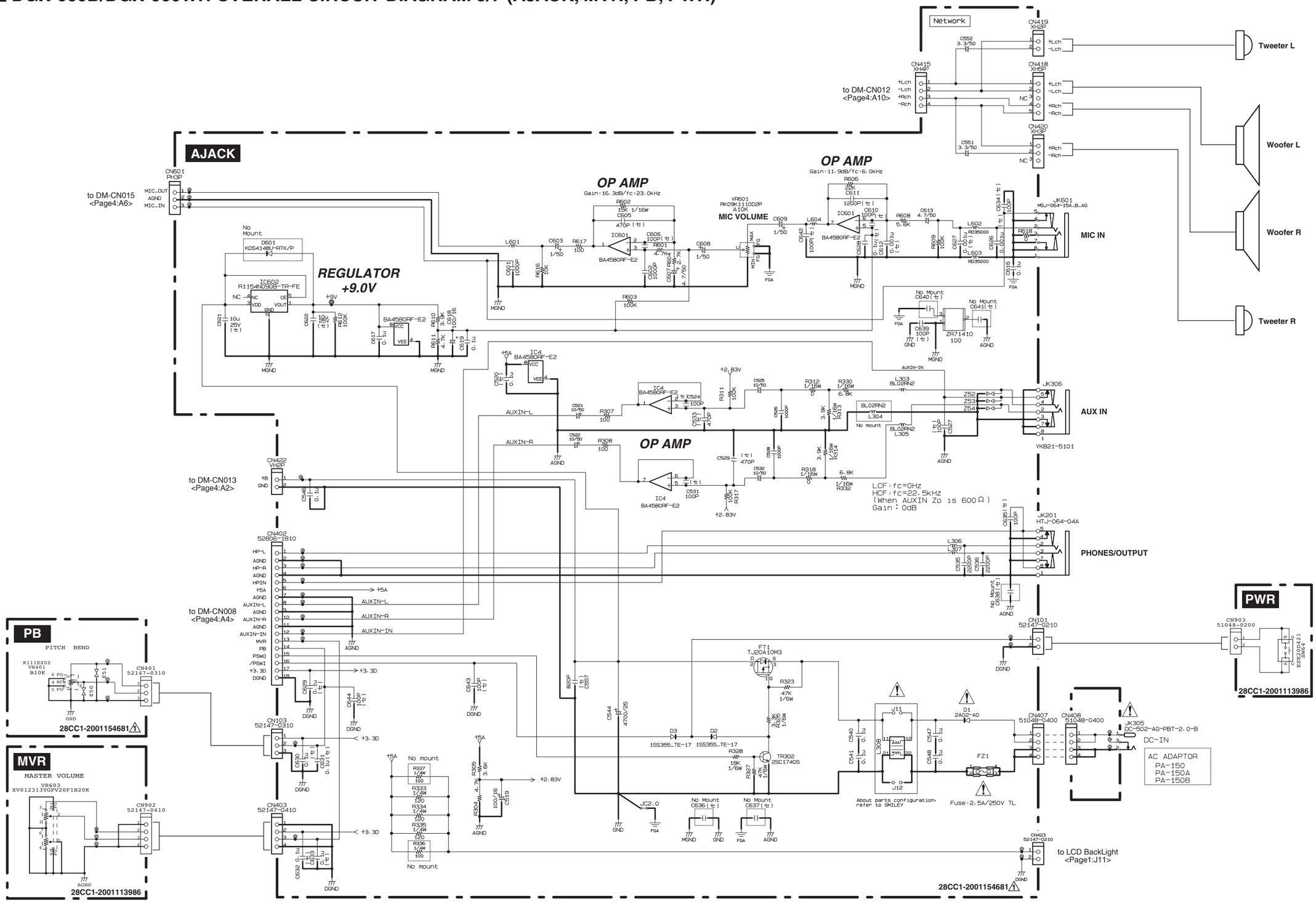

DGX-660B/DGX-660WH

■ DGX-660B/DGX-660WH OVERALL CIRCUIT DIAGRAM 6/7 (DJACK, ENC, PEDAL, PNL, PNR, USB)

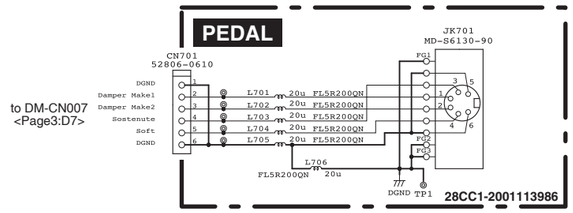

to DM-CN007 <Page3:D7>

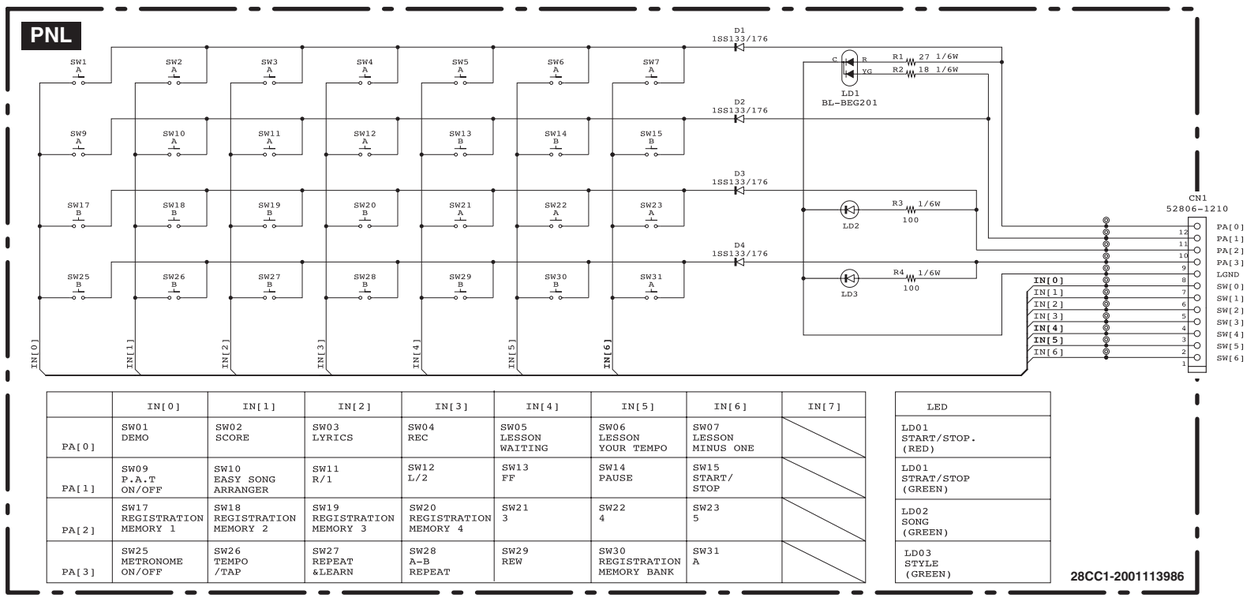

	IN[0]	IN[1]	IN[2]	IN[3]	IN[4]	IN[5]	IN[6]	IN[7]
PA[0]	SW01 DEMO	SW02 SCORE	SW03 LYRICS	SW04 REC	SW05 LESSON WAITING	SW06 LESSON YOUR TEMPO	SW07 LESSON MINUS ONE	
PA[1]	SW09 P.A.T ON/OFF	SW10 EASY SONG ARRANGER	SW11 R/1	SW12 L/2	SW13 FF	SW14 PAUSE	SW15 START/ STOP	
PA[2]	SW17 REGISTRATION MEMORY 1	SW18 REGISTRATION MEMORY 2	SW19 REGISTRATION MEMORY 3	SW20 REGISTRATION MEMORY 4	SW21 3	SW22 4	SW23 5	
PA[3]	SW25 METRONOME ON/OFF	SW26 TEMPO /TAP	SW27 REPEAT &LEARN	SW28 A-B REPEAT	SW29 REW	SW30 REGISTRATION MEMORY BANK	SW31 A	

LED	
LD01 START/STOP. (RED)	
LD01 STRAT/STOP (GREEN)	
LD02 SONG (GREEN)	
LD03 STYLE (GREEN)	

to DM-CN005 <Page3:D2>

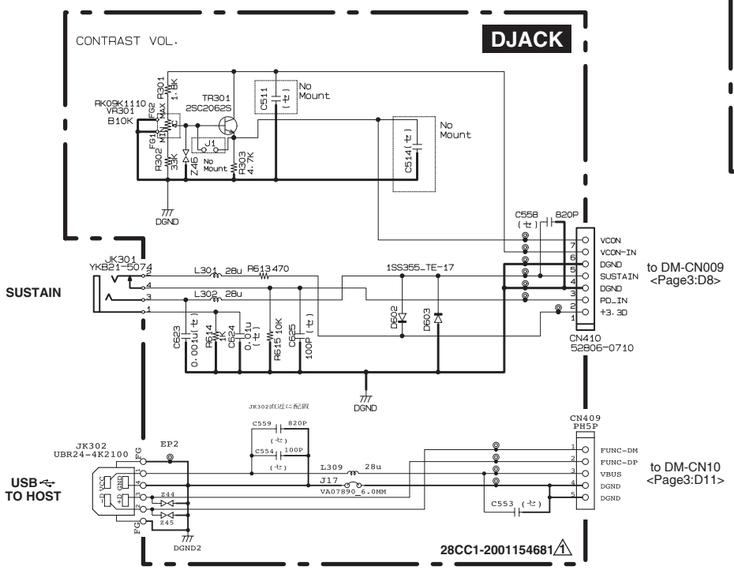

to DM-CN009 <Page3:D8>

to DM-CN10 <Page3:D11>

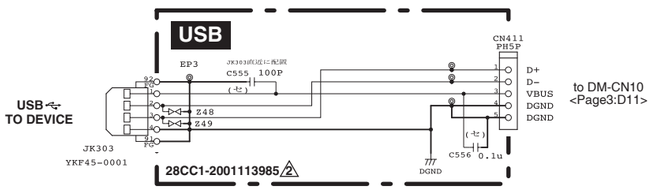

to DM-CN10 <Page3:D11>

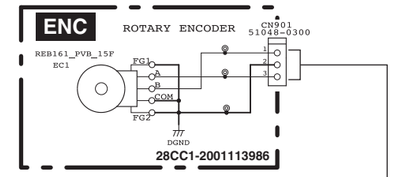

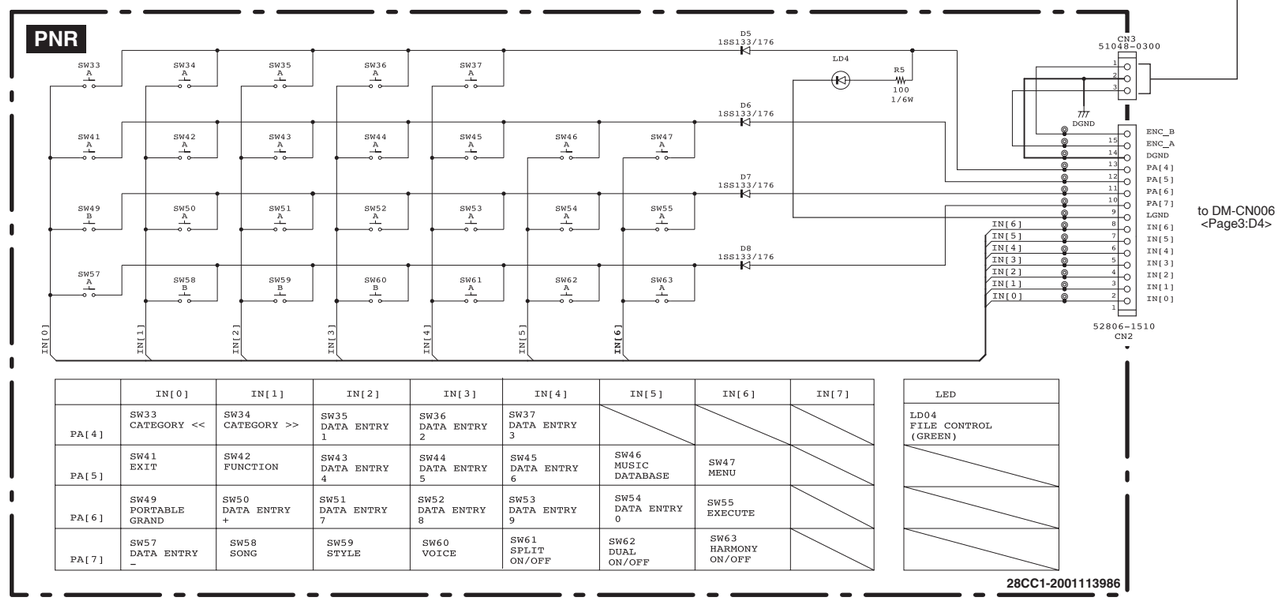

to DM-CN006 <Page3:D4>

	IN[0]	IN[1]	IN[2]	IN[3]	IN[4]	IN[5]	IN[6]	IN[7]
PA[4]	SW33 CATEGORY <<	SW34 CATEGORY >>	SW35 DATA ENTRY 1	SW36 DATA ENTRY 2	SW37 DATA ENTRY 3			
PA[5]	SW41 EXIT	SW42 FUNCTION	SW43 DATA ENTRY 4	SW44 DATA ENTRY 5	SW45 DATA ENTRY 6	SW46 MUSIC DATABASE	SW47 MENU	
PA[6]	SW49 PORTABLE GRAND	SW50 DATA ENTRY +	SW51 DATA ENTRY 7	SW52 DATA ENTRY 8	SW53 DATA ENTRY 9	SW54 DATA ENTRY 0	SW55 EXECUTE	
PA[7]	SW57 DATA ENTRY -	SW58 SONG	SW59 STYLE	SW60 VOICE	SW61 SPLIT ON/OFF	SW62 DUAL ON/OFF	SW63 HARMONY ON/OFF	

LED	
LD04 FILE CONTROL (GREEN)	

■ DGX-660B/DGX-660WH OVERALL CIRCUIT DIAGRAM 7/7 (GHL88H, GHL88L, GHL88M)

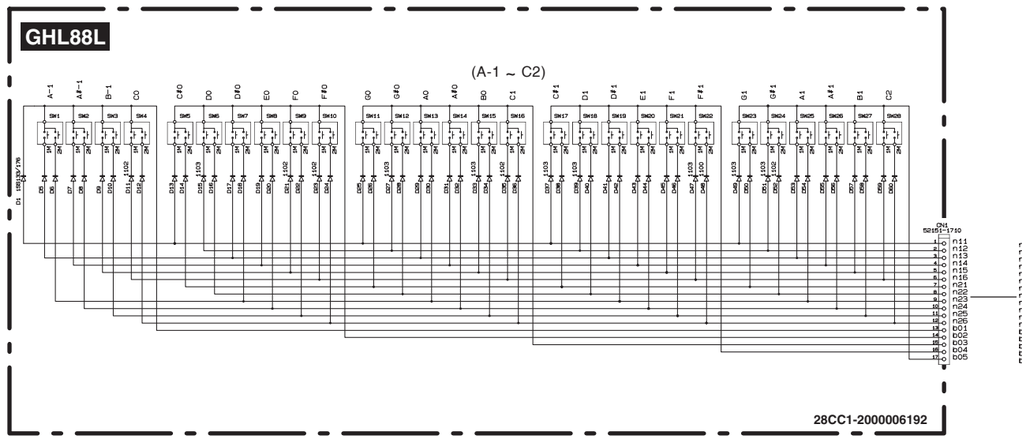

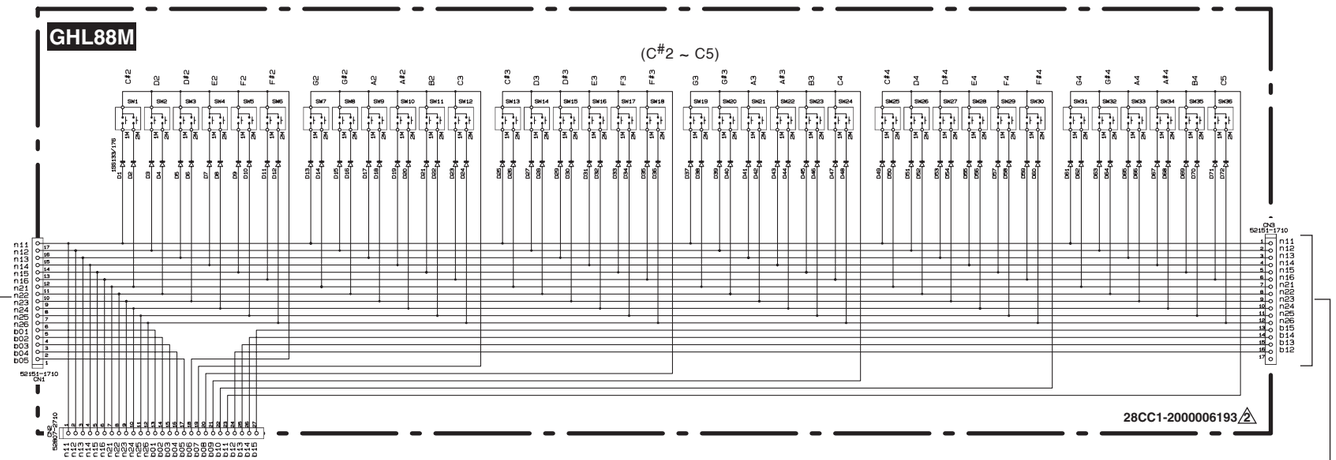

to DM-CN001
<Page2:M10>

