Clavinova®

# CVP-206/CVP-206M/CVP-206C

## SERVICE MANUAL



CVP-206



CVP-206M

* CVP-206M is only for export.
**（CVP-206Mは輸出仕様モデルのみです。）**



CVP-206C

* CVP-206C is only for export.
**（CVP-206Cは輸出仕様モデルのみです。）**

### ■ CONTENTS（目次）


SPECIFICATIONS（総合仕様）..... 3/4
PANEL LAYOUT（パネルレイアウト）..... 6
DISASSEMBLY PROCEDURE（分解手順）..... 9
LSI PIN DESCRIPTION（LSI 端子機能表）..... 25
IC BLOCK DIAGRAM（IC ブロック図）..... 32
CIRCUIT BOARDS（シート基板図）..... 34
TEST PROGRAM（テストプログラム）..... 52/56
SYSTEM RESET（システムリセット）..... 61
MIDI IMPLEMENTATION CHART ..... 62
MIDI DATA FORMAT ..... 64
PARTS LIST
BLOCK DIAGRAM（ブロックダイアグラム）
CIRCUIT BOARD LAYOUT & WIRING
（ユニットレイアウト＆結線図）
OVERALL CIRCUIT DIAGRAM（総回路図）



CL 001706

20030501-350000

YAMAHA
HAMAMATSU, JAPAN



Copyright (c) Yamaha Corporation. All rights reserved. PDF-K7602 '03.05

## IMPORTANT NOTICE

This manual has been provided for the use of authorized Yamaha Retailers and their service personnel. It has been assumed that basic service procedures inherent to the industry, and more specifically Yamaha Products, are already known and understood by the users, and have therefore not been restated.

**WARNING :** Failure to follow appropriate service and safety procedures when servicing this product may result in personal injury, destruction of expensive components and failure of the product to perform as specified. For these reasons, we advise all Yamaha product owners that all service required should be performed by an authorized Yamaha Retailer or the appointed service representative.

**IMPORTANT :** This presentation or sale of this manual to any individual or firm does not constitute authorization, certification, recognition of any applicable technical capabilities, or establish a principal-agent relationship of any form.

The data provided is believed to be accurate and applicable to the unit (s) indicated on the cover. The research engineering, and service departments of Yamaha are continually striving to improve Yamaha products. Modifications are, therefore, inevitable and changes in specification are subject to change without notice or obligation to retrofit. Should any discrepancy appear to exist, please contact the distributor's Service Division.

**WARNING :** Static discharges can destroy expensive components. Discharge any static electricity your body may have accumulated by grounding yourself to the ground bus in the unit (heavy gauge black wires connect to this bus).

**IMPORTANT :** Turn the unit OFF during disassembly and parts replacement. Recheck all work before you apply power to the unit.

## WARNING : CHEMICAL CONTENT NOTICE !

The solder used in the production of this product contains LEAD. In addition, other electrical/electronic and/or plastic (where applicable) components may also contain traces of chemicals found by the California Health and Welfare Agency (and possibly other entities) to cause cancer and/or birth defects or other reproductive harm.

DO NOT PLACE SOLDER, ELECTRICAL/ELECTRONIC OR PLASTIC COMPONENTS IN YOUR MOUTH FOR ANY REASON WHAT SO EVER!

Avoid prolonged, unprotected contact between solder and your skin! When soldering, do not inhale solder fumes or expose eyes to solder/flux vapor!

If you come in contact with solder or components located inside the enclosure of this product, wash your hands before handling food.

## IMPORTANT NOTICE FOR THE UNITED KINGDOM

### Connecting the Plug and Cord

**IMPORTANT .** The wires in this mains lead are coloured in accordance with the following code:

BLUE: NEUTRAL
BROWN: LIVE

As the colours of the wires in the mains lead of this apparatus may not correspond with the coloured markings identifying the terminals in your plug proceed as follows:

The wire which is coloured BLUE must be connected to the terminal which is marked with the letter N or coloured BLACK.

The wire which is coloured BROWN must be connected to the terminal which is marked with the letter L or coloured RED.

Making sure that neither core is connected to the earth terminal of the three pin plug.

## ■ WARNING

Components having special characteristics are marked ⚠ and must be replaced with parts having specification equal to those originally installed.

⚠印の部品は、安全を維持するために重要な部品です。交換する場合は、安全のために必ず指定の部品をご使用ください。

# ■ SPECIFICATIONS

◯: available

| | | | |
|---|---|---|---|
| **Sound Source** | | | AWM Dynamic Stereo Sampling |
| **Display** | | | 320 x 240 dots backlit graphic LCD |
| **Keyboard** | | | 88 keys (A-1 - C7) |
| **Voice** | **Polyphony (max)** | | 96 |
| | **Voice Selection** | | 311 voices + 480 XG voices + 16 Drum Kits |
| | | **Regular Voice** | 276 |
| | | **Natural Voice** | 21 |
| | | **Sweet Voice** | 11 |
| | | **Cool Voice** | 2 |
| | | **Live Voice** | 1 |
| | **Sound creator** | | ◯ |
| **Effects** | **Effect Blocks** | **Reverb** | 2 |
| | | **Chorus** | 2 |
| | | **DSP** | 2 |
| | | **Brilliance** | 1 |
| | **Effect Types** | **REVERB1** | 23+3 User |
| | | **REVERB2** | 5 |
| | | **CHORUS1** | 15+3 User |
| | | **CHORUS2** | 3 |
| | | **DSP1** | 92+3 User |
| | | **DSP2** | 12 |
| | | **Brilliance** | 5 |
| **Accompaniment Style** | **Accompaniment Styles** | | 210 |
| | **Session Styles** | | 14 |
| | **Pianist Styles** | | 36 |
| | **Piano Combo Styles** | | 17 |
| | **Fingering** | | Single Finger, Fingered, Fingered On Bass, Multi Finger, AI Fingered, Full Keyboard, AI Full Keyboard |
| | **Style Creator** | | ◯ |
| | **OTS (One Touch Setting)** | | 4/Accompaniment Style |
| | **OTS link** | | ◯ |
| | **Music Finder** | | Approximately 2500 records |
| | | **Edit** | ◯ |
| **Song** | **Format** | | SMF (Format 0,1), ESEQ |
| | **Preset Songs** | | ◯ |
| | **Guide** | | Follow Lights, Any Key, Karao-Key |
| | | **Guide Lamp** | 88 Red |
| | **Lyrics** | | ◯ |
| | **Score** | | ◯ |
| | **Recording** | | Quick Recording, Multi Recording, Step Recording, Song Editing |
| | | **Record Channels** | 16 |
| **Memory Device** | **Floppy Disk (2HD,2DD)** | | ◯ |
| | **Flash Memory (internal)** | | 1.5 MB |
| | **Flash Availability** | | Song (SMF), Style (SFF), Registration, Voice, etc. |
| **Tempo** | **Tempo Range** | | 5 - 500 |
| | **Tap Tempo** | | ◯ |
| | **Metronome** | | ◯ |
| | | **Sound** | Bell on/off, Human Voices (5 languages) |
| **Registration Memory** | **Buttons** | | 8 |
| | **Regist Sequence** | | ◯ |
| | **Freeze** | | ◯ |

| | | |
|---|---|---|
| **Others** | **Demo** | Function, Voice, Style |
| | **Language** | 6 languages (English, Japanese, German, French, Spanish, Italian) |
| | **Help** | ○ |
| | **Direct Access** | ○ |
| | **Piano setting button (including Piano Lock)** | ○ |
| | **Master Volume** | ○ |
| | **Fade In/Out** | ○ |
| | **Transpose** | Keyboard/Song/Master |
| | **Tuning** | ○ |
| | **Tuning Curve** | Flat/Stretch (Natural Piano Voice only) |
| | **Scale** | Equal Temperament, Pure Major/Pure Minor, Pythagorean, Mean-Tone, Werckmeister/Kirnberger, Arabic 1/2 |
| | **Touch Response** | 5 level |
| **Jacks/Connectors** | | PHONES x 2, MIDI (THRU, OUT, IN), USB, AUX PEDAL, AUX IN (L/L+R, R), AUX OUT (LEVEL FIXED) (L/R), AUX OUT (L/L+R, R) MIC (INPUT VOLUME, MIC./ LINE IN),VIDEO OUT |
| **Pedals** | **Number of Pedals** | 3 |
| | **Pedal Functions** | VOLUME, SUSTAIN, SOSTENUTO, SOFT, GLIDE, PORTAMENTO, PITCHBEND, MODULATION, DSP VARIATION, VIBROTOR ON/OFF, SONG START/STOP, STYLE START/STOP, etc. |
| **Amplifiers/ Speakers** | **Amplifiers** | 40 W x 2 |
| | **Speakers** | (16 cm + 5 cm) x 2 |
| **Dimensions [W x D x H] (with the Music Stand)** | | 1384.0 x 598.2 x 900.1 mm [54-1/2" x 23-9/16" x 35-7/16"] (1384.0 x 598.2 x 1070.0 mm) [54-1/2" x 23-9/16" x 42-1/8"] |
| **Weight** | | 80 Kg (176 lbs., 6 oz) |
| **Output Impedance** | | PHONES: 33 ohm load, AUX OUT: 600 ohm, VIDEO OUT: 75 ohm |
| **Accessories** | | “50 greats for the Piano” Disk (and Music Book) Recording disk Owner's Manual Data List Bench (included or optional depending on locale) |

## ■ 総合仕様

| | | | |
|---|---|---|---|
| **音源** | | | AWM**音源** |
| **ディスプレイ** | | | 320×240**ドット**LCD(**バックライト付き**) |
| **鍵盤** | | | 88**鍵** (A-1〜C7) |
| **ボイス** | **最大同時発音数** | | 96 |
| | **音色数** | | **クラビノーバオリジナルノーマル音色**: 311**種類** XG**音色**: 480**種類　ドラムキット**: 16**セット** |
| | | **レギュラー音色** | 276 |
| | | **ナチュラル音色** | 21 |
| | | **スイート音色** | 11 |
| | | **クール音色** | 2 |
| | | **ライブ音色** | 1 |
| | **サウンドクリエーター** | | ○ |
| **エフェクト** | **エフェクトブロック** | **リバーブ** | 2**系統** |
| | | **コーラス** | 2**系統** |
| | | **DSP** | 2**系統** |
| | | **ブリリアンス** | 1**系統** |
| | | **マイク** | DSP**と共用** |
| | **エフェクトタイプ** | **リバーブ1** | 23+3**ユーザー** |
| | | **リバーブ2** | 5 |
| | | **コーラス1** | 15+3**ユーザー** |
| | | **コーラス2** | 3 |
| | | **DSP1** | 92+3**ユーザー** |
| | | **DSP2** | 12 |
| | | **ブリリアンス** | 5 |

| | | |
|---|---|---|
| 伴奏スタイル | ノーマルスタイル数 | 210 |
| | セッションスタイル数 | 14 |
| | ピアニストスタイル数 | 36 |
| | ピアノコンボスタイル数 | 17 |
| | 自動伴奏 | シングルフィンガー、フィンガード、フィンガードオンベース、マルチフィンガー、AIフィンガード、フルキーボード、AIフルキーボード |
| | スタイルクリエーター | ○ |
| | OTS（ワンタッチセッティング） | 各伴奏スタイルに4種類 |
| | OTSリンク | ○ |
| | ミュージックファインダー | 最大2500レコード |
| | エディット | ○ |
| 曲(ソング) | フォーマット | SMF(フォーマット0,1), ESEQ |
| | プリセットソング | ○ |
| | ガイドファンクション | フォローライツ/エニーキー/カラオキー |
| | ガイドランプ | 赤色×88鍵 |
| | 歌詞表示 | ○ |
| | 楽譜表示 | ○ |
| | 録音 | クイック録音、多重録音、ステップ録音、曲編集(歌詞編集含む) |
| | 録音チャンネル数 | 16 |
| 記憶媒体デバイス | フロッピーディスク(2HD、2DD) | ○ |
| | フラッシュメモリー(内蔵) | 1.5 MB |
| | 記憶できるデータの種類 | ソング(SMF)、スタイル(SFF)、レジストレーション、ボイス、その他 |
| テンポ | テンポ範囲 | 5〜500 |
| | タップテンポ | ○ |
| | メトロノーム | ○ |
| | サウンド | ベル オン/オフ、ヒューマンボイス(5言語) |
| レジストレーションメモリー | ボタン | 8 |
| | レジストシーケンス | ○ |
| | フリーズ | ○ |
| ユーティリティ | デモ機能 | 機能、音色、伴奏スタイル |
| | デモ・ヘルプ言語 | 6言語(日、英、独、仏、西、伊) |
| | ダイレクトアクセス | ○ |
| | ピアノボタン（ピアノロック含） | ○ |
| その他 | マスターボリューム | ○ |
| | フェードイン/アウト | ○ |
| | トランスポーズ | キーボード/ソング/マスター |
| | チューニング | ○ |
| | チューニングカーブ | フラット/ストレッチ(NATURAL音色のピアノのみ) |
| | スケール | 平均律、純正律長音、純正律短音、ピタゴラス音律、中全音律、ヴェルクマイスター音律、キルンベルガー音律、アラブ音律1/2 |
| | タッチレスポンス | ○ |
| 付属端子 | | PHONES端子×2、MIDI(THRU, OUT, IN)、USB 端子、AUX PEDAL端子、AUX IN(L/L+R, R)端子、AUX OUT (LEVEL FIXED)(L/R)端子、AUX OUT(L/L+R, R)端子 マイクロフォン端子(INPUT VOLUME、MIC./LINE IN)、VIDEO OUT端子 |
| ペダル | ペダル数 | 3 |
| | ペダルファンクション | ボリューム、サステイン、ソステヌート、ソフト、グライド、ポルタメント、ピッチベンド、バイブローターオン／オフ、ソング/スタイルスタート/ストップ、その他 |
| 再生部 | 出力 | 40 W×2 |
| | スピーカ | (16 cm + 5 cm)×2 |
| 定格電源 | | AC100 V 50/60 Hz |
| 消費電力 | | 60 W |
| 寸法[間口×奥行×高さ]<br>( )内は譜面立てを立てた場合 | | 1384.0 mm×598.2 mm×900.1 mm<br>(1384.0 mm×598.2 mm×1070.0 mm) |
| 質量 | | 80 kg |
| 出力インピーダンス | | PHONES: 33Ω負荷推奨、AUX OUT: 600Ω、VIDEO OUT: 75Ω |
| 付属品 | | ミュージックファインダーディスク、録音用ディスク、取扱説明書（「クイックガイド」「基本操作」「本編」）、取扱説明書別冊「データリスト」、保証書、ご愛用者カード、ヘッドフォン、イス（高さ調節付き） |

# ■ PANEL LAYOUT（パネルレイアウト）

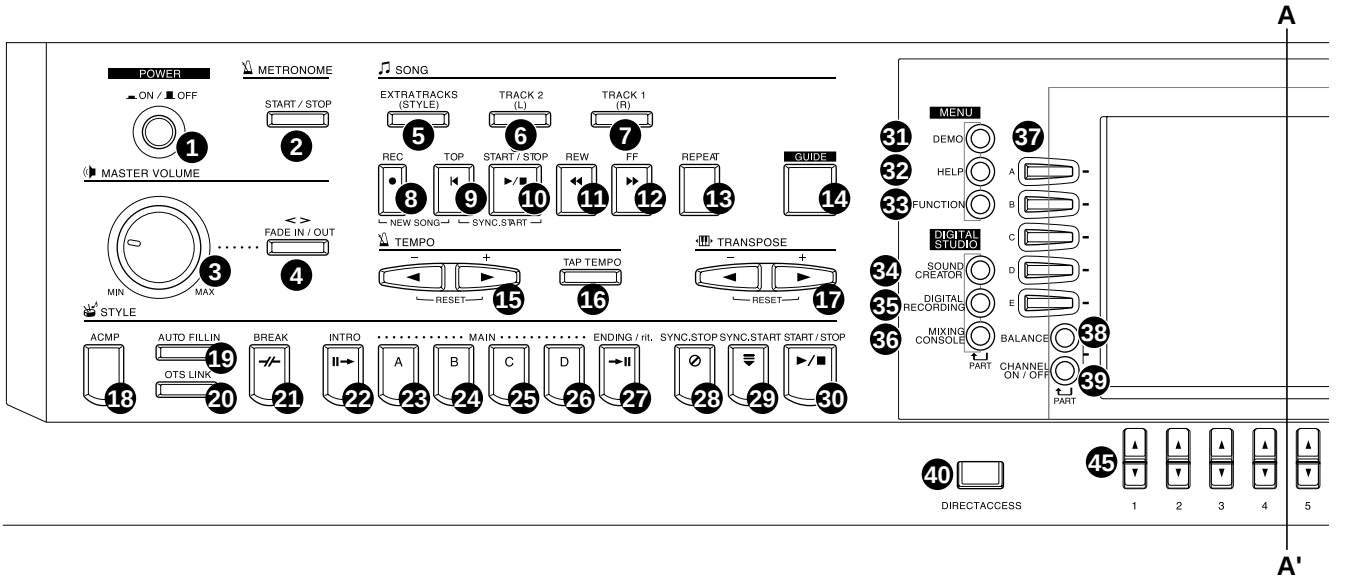


**POWER**
1 [ON / OFF] button (POWER)

**METRONOME**
2 [START / STOP] button (METRONOME)

**MASTER VOLUME**
3 [MASTER VOLUME] dial
4 [FADE IN / OUT] button

**SONG**
5 [EXTRA TRACKS (STYLE)] button
6 [TRACK 2 (L)] button
7 [TRACK 1 (R)] button
8 [REC] button
9 [TOP] button
10 [START / STOP] button (SONG)
11 [REW] button
12 [FF] button
13 [REPEAT] button
14 [GUIDE] button

**TEMPO**
15 [◄] [►] buttons (TEMPO)
16 [TAP TEMPO] button

**TRANSPOSE**
17 [◄] [►] buttons (TRANSPOSE)

**STYLE**
18 [ACMP] button
19 [AUTO FILLIN] button

**パワー**
1 [パワーオン/オフ]

**メトロノーム**
2 [スタート/ストップ]

**ボリューム**
3 [ボリューム]
4 [フェードイン/アウト]

**ソング**
5 [その他トラック（スタイル）]
6 [トラック2（左手）]
7 [トラック1（右手）]
8 [録音]
9 [トップ]
10 [スタート/ストップ]
11 [巻き戻し]
12 [早送り]
13 [くり返し]
14 [ガイド]

**テンポ**
15 [◄][►]
16 [タップテンポ]

**トランスポーズ**
17 [◄][►]

**スタイル**
18 [自動伴奏]
19 [オートフィルイン]

20 [OTS LINK] button
21 [BREAK] button
22 [INTRO] button
23 MAIN [A] button
24 MAIN [B] button
25 MAIN [C] button
26 MAIN [D] button
27 [ENDING / rit.] button
28 [SYNC.STOP] button
29 [SYNC.START] button
30 [START / STOP] button (STYLE)

**MENU**
31 [DEMO] button
32 [HELP] button
33 [FUNCTION] button

**DIGITAL STUDIO**
34 [SOUND CREATOR] button
35 [DIGITAL RECORDING] button
36 [MIXING CONSOLE] button

**DISPLAY CONTROL**
37 [A] - [J] buttons
38 [BALANCE] button
39 [CHANNEL ON / OFF] button
40 [DIRECT ACCESS] button
41 [BACK] button
42 [NEXT] button

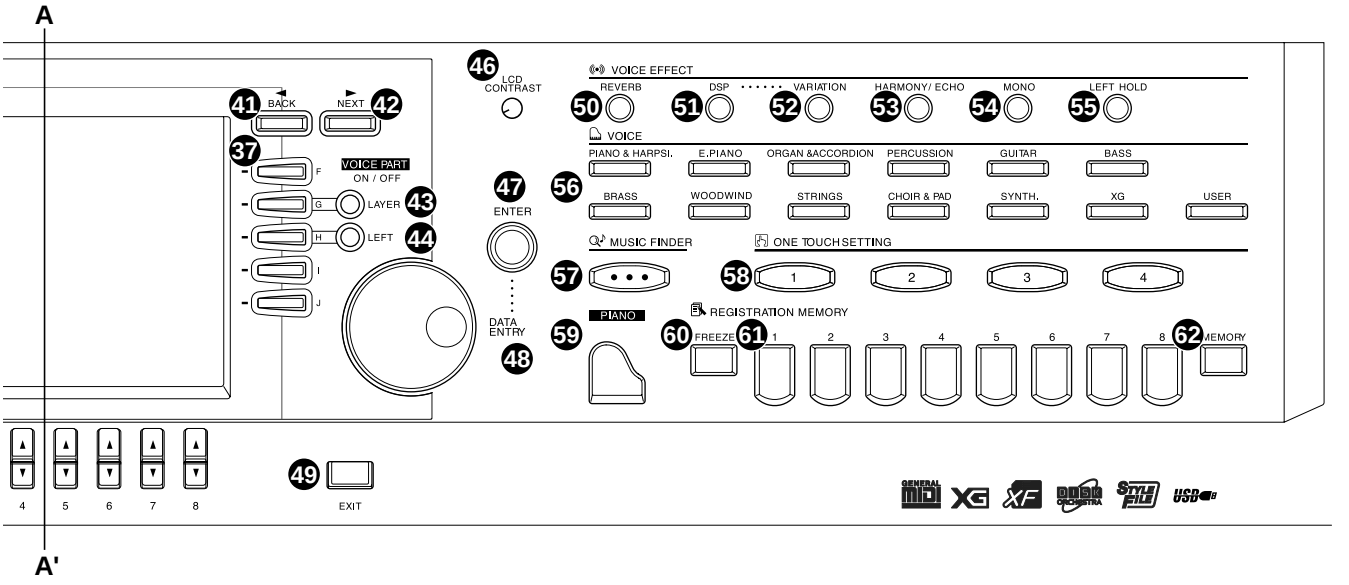


20 [OTSリンク]
21 [ブレイク]
22 [イントロ]
23 メイン[A]
24 メイン[B]
25 メイン[C]
26 メイン[D]
27 [エンディング/rit.]
28 [シンクストップ]
29 [シンクスタート]
30 [スタート/ストップ]

### メニュー
31 [デモ]
32 [ヘルプ]
33 [ファンクション]

### デジタルスタジオ
34 [サウンドクリエーター]
35 [デジタルレコーディング]
36 [ミキシングコンソール]

### ディスプレイコントロール
37 [A]〜[J]
38 [バランス]
39 [チャンネルオン/オフ]
40 [ダイレクトアクセス]
41 [バック]
42 [ネクスト]

43 VOICE PART ON / OFF [LAYER] button
44 VOICE PART ON / OFF [LEFT] button
45 [1 ▲▼] - [8 ▲▼] buttons
46 [LCD CONTRAST] knob
47 [ENTER] button
48 [DATA ENTRY] dial
49 [EXIT] button

### VOICE EFFECT
50 [REVERB] button
51 [DSP] button
52 [VARIATION] button
53 [HARMONY / ECHO] button
54 [MONO] button
55 [LEFT HOLD] button

### VOICE
56 VOICE buttons

### MUSIC FINDER
57 [MUSIC FINDER] button

### ONE TOUCH SETTING
58 [1] - [4] buttons (ONE TOUCH SETTING)

### PIANO Setting
59 [PIANO] button

### REGISTRATION MEMORY
60 [FREEZE] button
61 [1] – [8] buttons (REGISTRATION MEMORY)
62 [MEMORY] button

43 ボイスパートオン/オフ[レイヤー]
44 ボイスパートオン/オフ[レフト]
45 [1 ▲▼]〜[8 ▲▼]
46 [LCDコントラスト]
47 [エンター]
48 [データエントリー]
49 [戻る]

### ボイスエフェクト
50 [リバーブ]
51 [DSP]
52 [バリエーション]
53 [ハーモニー/エコー]
54 [モノ]
55 [レフトホールド]

### ボイス
56 ボイスボタン

### ミュージックファインダー
57 [ミュージックファインダー]

### ワンタッチセッティング（OTS）
58 [1]〜[4]

### ピアノ設定
59 [ピアノ]

### レジストレーションメモリー
60 [フリーズ]
61 [1]〜[8]
62 [メモリー]

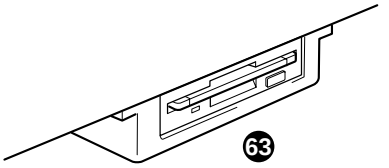


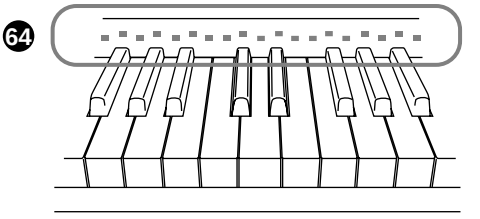


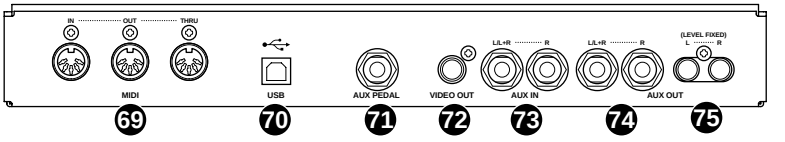


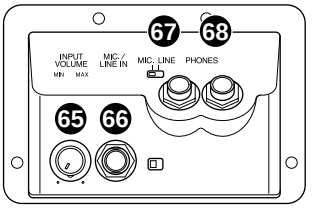


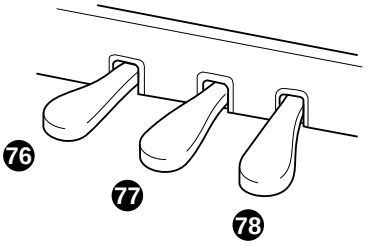


63 Floppy disk drive (3.5")

64 Keyboard guide lamps

### Microphone and Headphone Connectors

65 [INPUT VOLUME] knob

66 [MIC. LINE IN] jack

67 [MIC. LINE] switch

68 [PHONES] jacks

### Connectors

69 MIDI [THRU] [OUT] [IN] terminals

70 [USB] terminal

71 [AUX PEDAL] jack

72 [VIDEO OUT] jack

73 AUX IN [L / L+R] [R] jacks

74 AUX OUT [L / L+R] [R] jacks

75 AUX OUT (LEVEL FIXED) [L] [R] jacks

### Pedals

76 Left pedal

77 Sostenuto pedal

78 Damper pedal

63 3.5"フロッピーディスクドライブ

64 鍵盤ガイドランプ

### マイク/ヘッドフォン端子

65 [INPUT VOLUME]

66 [MIC./LINE IN]

67 [MIC. LINE]

68 [PHONES]

### 端子

69 MIDI [THRU][OUT] [IN]

70 [USB]

71 [AUX PEDAL]

72 [VIDEO OUT]

73 AUX IN [L / L+R] [R]

74 AUX OUT [L / L+R] [R]

75 AUX OUT（LEVEL FIXED）[L] [R]

### ペダル

76 レフトペダル

77 ソステヌートペダル

78 ダンパーペダル

# ■ DISASSEMBLY PROCEDURE（分解手順）

## 1. Floppy Disk Drive

**(Time required : About 7 minutes)**

1-1. Remove the four (4) screws marked [50A]. The FDD unit can then be removed. (Fig. 1)

1-2. Remove the four (4) screws marked [8A]. The FDD cover can then be removed from the FDD unit. (Fig. 2)

1-3. Remove the screw marked [3A]. The GND wire can then be removed. (Fig. 3)

1-4. Remove the three (3) screws marked [3B]. The FDD holder can then be removed from the floppy disk drive. (Fig. 3)

## 1. FDD（所要時間:約7分）

1-1. [50A]のネジ4本を外し、FDDユニットを外します。（図1）

1-2. [8A]のネジ4本を外し、FDDユニットからFDDカバーを外します。（図2）

1-3. [3A]のネジ1本を外し、アース線を外します。（図3）

1-4. [3B]のネジ3本を外し、FDD金具をFDD（フロッピーディスクドライブ）から外します。（図3）

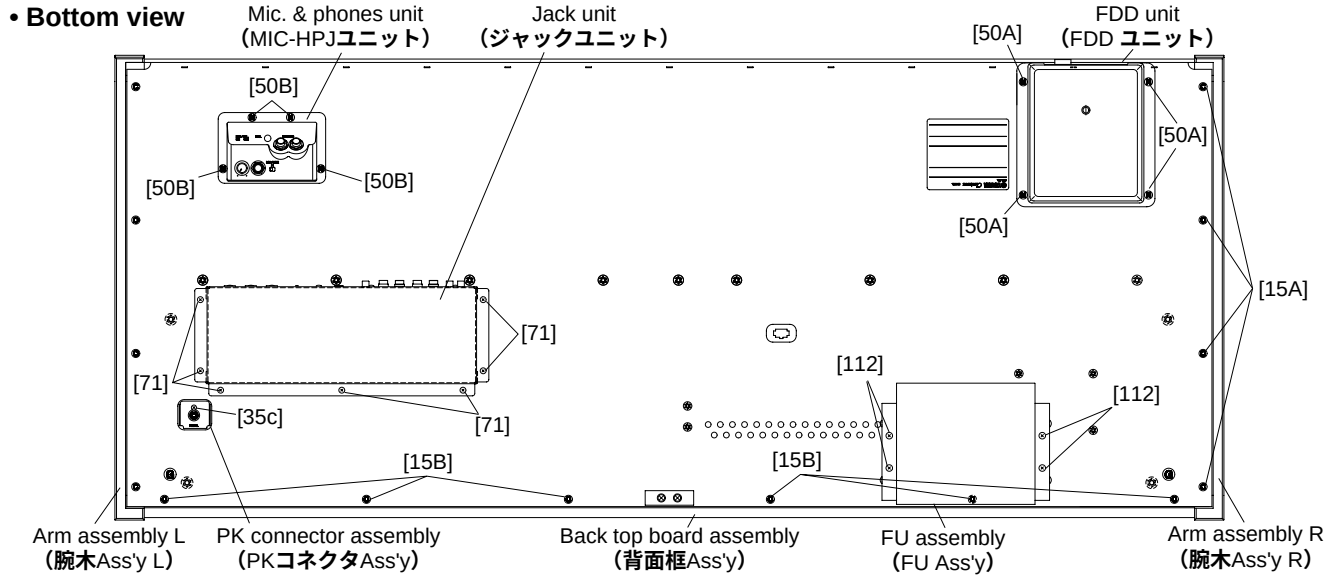


[15]: Truss Head Tapping Screw-1 3.5x25 MFZN2BL (EN630190)
＋トラスTP1種

[50]: Bind Head Tapping Screw-1 3.5x14 MFZN2BL (EP030250)
＋バインドTP1種

[35c]: Bind Head Tapping Screw-B 3.0x8 MFZN2BL (EP600190)
＋バインドBタイト

Fig. 1（図1）

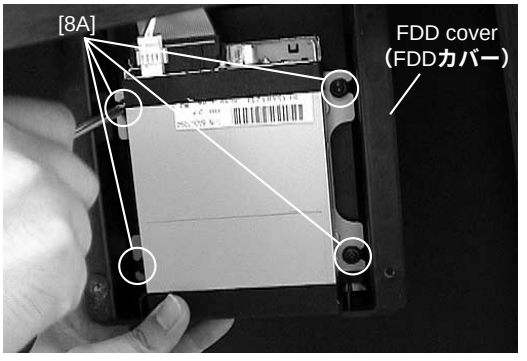


[8A]: PW Head Tapping Screw-B 3.0x8-8 MFZN2BL (V2276900)
＋PWHBタイト

Fig. 2（図2）

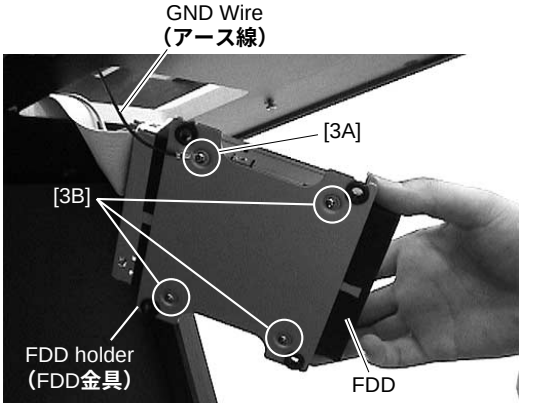


[3]: Bind Head Screw 3.0x5 MFZN2Y (EG330150)
＋バインド小ネジ

Fig. 3（図3）

## 2. Mic. & Phones Unit, MIC and HP Circuit Boards (Time required : About 7 minutes)

2-1. Remove the four (4) screws marked [50B]. The mic. & phones unit can then be removed. (Fig. 1)

2-2. Remove the input volume knob, the hexagonal nut marked [40A], the washer marked [50C], the hexagonal nut marked [70] and the washer marked [80]. The MIC circuit board can then be removed. (Fig. 4)

2-3. Remove the tow (2) hexagonal nuts marked [40B] and the tow (2) washers marked [50D]. The HP circuit board can then be removed. (Fig. 4)

## 2. MIC-HPJユニット、MICシート、HPシート（所要時間：約7分）

2-1. [50B]のネジ4本を外し、MIC-HPJユニットを外します。（図1）

2-2. INPUT VOLUMEのツマミと[40A]の特殊六角ナット1個、[50C]のワッシャー1個、[70]の六角ナット1個、[80]のワッシャー1個を外し、MICシートを外します。（図4）

2-3. [40B]の特殊六角ナット2個と[50D]のワッシャー2個を外し、HPシートを外します。（図4）

**• Mic. & Phones Unit（MIC-HPJユニット）**

**< Bottom view >**

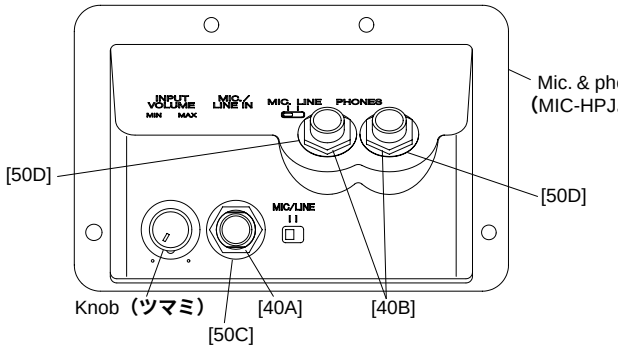


**< Side view >**

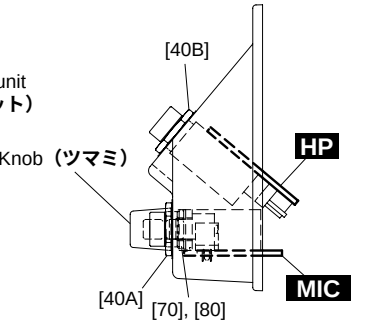


[40]: Hexagonal Nut 12.0 14x2 MFZN2BL (VB508600) **特殊六角ナット**
[50]: Washer (VJ869400) **ワッシャー**
[70]: Hexagonal Nut 7.0 x 0.75 **六角ナット**
[80]: Washer **ワッシャー**

Fig. 4 **（図4）**

## 3. Music Rest Assembly

**(Time required : About 3 minutes)**

Remove the four (4) screws marked [7A]. The music rest assembly can then be removed. (Fig. 5)

## 3. 譜面板Ass'y（所要時間：約3分）

[7A]のネジ4本を外し、譜面板Ass'yを外します。（図5）

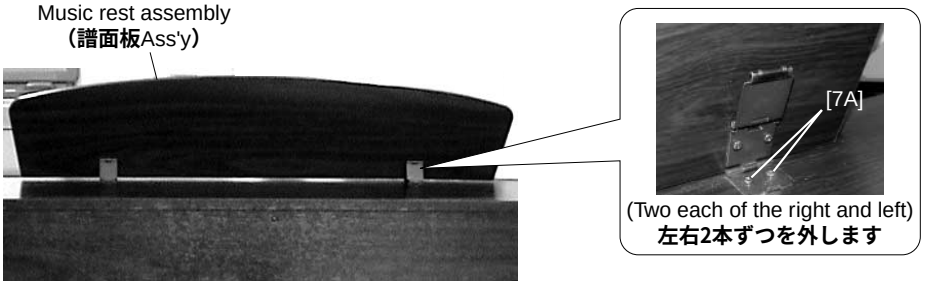


[7A]: Bind Head Tapping Screw-1 3.0x16 MFZN2BL (EP030310)
**＋バインド**TP1**種**

Fig. 5 **（図5）**

## 4. Top Board Assembly

**(Time required : About 3 minutes)**

Remove the three (3) screws marked [5]. The top board assembly can then be removed by moving forward and lifting up. (Fig. 6)

## 4. 屋根Ass'y（所要時間：約3分）

[5]のネジ3本を外し、屋根Ass'yを前方へずらした後、持ち上げて外します。（図6）

## 5. Back Board Assembly

**(Time required : About 3 minutes)**

Remove the two (2) screws marked [S2A] and the five (5) screws marked [S4]. The back board assembly can then be removed. (Fig. 6)

## 5. 裏板Ass'y（所要時間：約3分）

[S2A]のネジ2本、[S4]のネジ5本を外し、裏板Ass'yを外します。（図6）

• **Rear view**

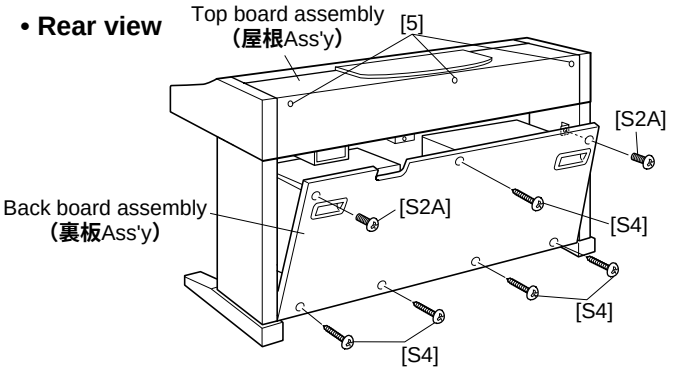


**CVP-206/CVP-206M**
[S2A]: Truss Head Screw 4.0x14 MFZN2BL (VB931700)
**＋トラス小ネジ**
[S4]: Truss Head Tapping Screw-1 4.0x20 MFZN2BL (03747290)
**＋トラス**TP1**種**
[5]: Truss Head Screw 4.0x16 MFZN2BL (V6207400)
**＋トラス小ネジ**

**CVP-206C**
[S2A]: Truss Head Screw 4.0x14 MFC2BR (WA596100)
**＋トラス小ネジ**
[S4]: Truss Head Tapping Screw-1 4.0x20 MFC2BR (VB164600)
**＋トラス**TP1**種**
[5]: Truss Head Screw 4.0x16 MFC2BR (V9446400)
**＋トラス小ネジ**

Fig. 6（**図**6）

## 6. Unit & Assemblies (Back Board Assembly)

**(Time required : About 7 minutes each)**

6-1. Remove the back board assembly. (See procedure 5)

6-2. Each unit and assembly can be removed by removing its fixing screws as listed below.

## 6. ユニット、アッセンブリ（裏板Ass'y部）

**（所要時間：各約7分）**

6-1. 裏板Ass'yを外します。(5項参照)

6-2. 次のネジを外すことにより、ユニット・アッセンブリを外すことができます。

| Unit and Assembly | Ref. No. | Screw | | QTY | Fig. |
|---|---|---|---|---|---|
| Speaker Box Assembly (L, R) *1 | 6A | Truss Head Screw 4.0x30 MFZN2Y (V5877100) | **＋トラス小ネジ** | 16 | 7 |
| Jack Unit *2 | 71 | Bind Head Tapping Screw-1 3.5x12 MFZN2BL (EP030340) | **＋バインドTP1種** | 7 | 1 |
| FU Assembly | 112 | Truss Head Tapping Screw-1 3.5x30 MFZN2Y (VA076400) | **＋トラスTP1種** | 4 | 1 |

***1 When removing the speaker box assembly, use a screwdriver with a longer than 20cm shank.**

***1 スピーカーBox Ass'yを外すときは、軸長が20cm以上のドライバーをご用意ください。**

***2 Before removing the jack unit, remove the four (4) screws marked [S1] first, move the main unit rearward a little so that the screws covered by the front board assembly can be seen. (Fig. 21)**

***2 ジャックユニットを外すときは、先に[S1]のネジを外し、メインユニットを少し後方にずらして、前板Ass'yにかくれているネジを見える状態にしておきます。(図21)**

• **Rear view**

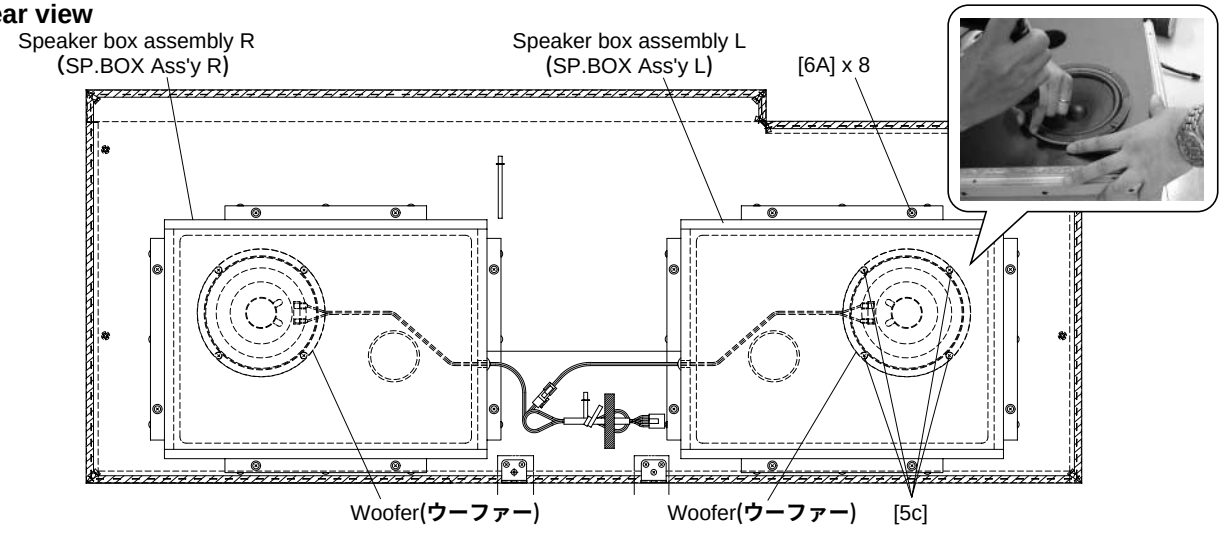


[5c]: Bind Head Tapping Screw-1 4.0x16 MFZN2BL (EP040250) **＋バインド**TP1**種**

Fig. 7（**図**7）

## 7. Woofers (Time required : About 10 minutes)

7-1. Remove the back board assembly. (See procedure 5)

7-2. Remove the speaker box assembly L. (See procedure 6)

7-3. Remove the four (4) screws marked [5c]. The left woofer can then be removed. (Fig. 7)

*** The right woofer can then be removed in the same manner.**

## 7. ウーファー（所要時間：約10分）

7-1. 裏板Ass'yを外します。(5項参照)

7-2. SP. BOX Ass'y Lを外します。(6項参照)

7-3. [5c]のネジ4本を外し、左のウーファーを外します。(図7)

※ **右のウーファーも同様にして外します。**

## 8. FU60 Assembly, FU60 Circuit Board

**(Time required : About 10 minutes)**

8-1. Remove the back board assembly. (See procedure 5)
8-2. Remove the FU assembly. (See procedure 6)
8-3. Remove the two (2) screws marked [3C]. The FU60 assembly can then be removed. (Fig. 8)
8-4. Remove the two (2) screws marked [1A], the two (2) screws marked [6B] and the two (2) screws marked [4A] (General export model only). The FU60 circuit board can then be removed. (Fig. 8)

## 9. A-JACK Circuit Board, DJK Circuit Board

**(Time required : About 10 minutes each)**

9-1. Remove the back board assembly. (See procedure 5)
9-2. Remove the jack unit. (See procedure 6)
9-3. Remove the six (6) screws marked [4B], the four (4) heagonal nuts marked [6C] and the four (4) washers marked [7B]. The A-JACK circuit board can then be removed. (Fig. 9)
9-4. Remove the five (5) screws marked [4C], the heagonal nut marked [6D] and the washer marked [7C]. The DJK circuit board can then be removed. (Fig. 9)

**• FU Assembly（FU Ass'y）**

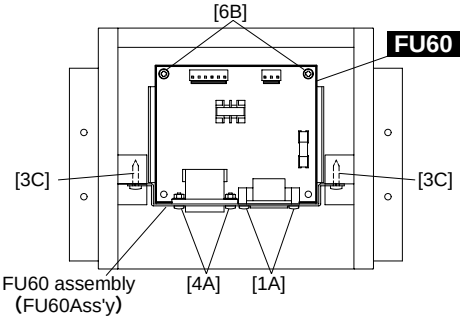


[1A]: Bind Head Tapping Screw-B 3.0x8 MFZN2BL (EP600190)
**＋バインドBタイト**
[3C]: Bind Head Tapping Screw-1 3.5x16 MFZN2BL (EP030260)
**＋バインド**TP1**種**
[4A]: Bind Head Screw 3.0x10 MFZN2BL (EG330380)
**＋バインド小ネジ**
[6B]: Bind Head Tapping Screw-B 3.0x12 MFZN2Y (VE683000)
**＋バインド**B**タイト**

Fig. 8（**図**8）

## 8. FU60 Ass'y、FU60シート（所要時間:約10分）

8-1. 裏板Ass'yを外します。(5項参照)
8-2. FU Ass'yを外します。(6項参照)
8-3. [3C]のネジ2本を外し、FU60 Ass'yを外します。(図8)
8-3. [1A]のネジ2本、[6B]のネジ2本と[4A]のネジ2本(N仕向けのみ)を外し、FU60シートを外します。(図8)

## 9. A-JACK シート、DJKシート

**(所要時間:約10分)**

9-1. 裏板Ass'yを外します。(5項参照)
9-2. ジャックユニットを外します。(6項参照)
9-3. [4B]のネジ6本、[6C]の特殊六角ナット4個、[7B]のワッシャー4個を外し、A-JACKシートを外します。(図9)
9-4. [4C]のネジ5本、[6D]の特殊六角ナット1個、[7C]のワッシャー1個を外し、DJKシートを外します。(図9)

**• Jack Unit（ジャックユニット）**

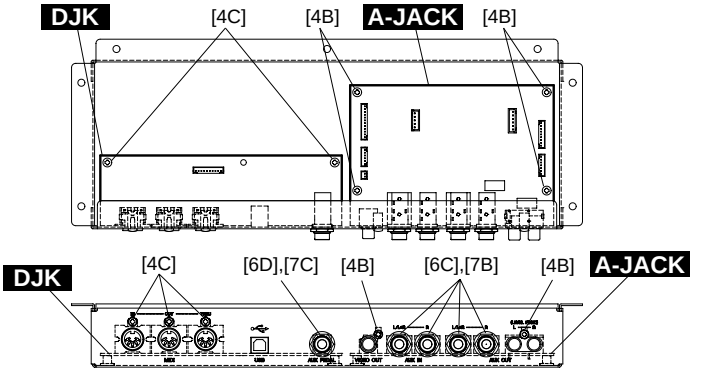


[4]: Bind Head Tapping Screw-B 3.0x8 MFZN2BL (EP600190)
**＋バインド**B**タイト**
[6]: Hexagonal Nut 12.0 14x2 MFZN2BL (VB508600)
**特殊六角ナット**
[7]: Washer (VJ869400)
**ワッシャー**

Fig. 9（**図**9）

## 10. Circuit Boards & Assemblies (Main Unit-PART1) (Time required : About 5 minutes each)

10-1. Remove the top board assembly. (See procedure 4)
10-2. Each circuit board and assembly can be removed by removing its fixing screws as listed below.

## 10. 基板とアッセンブリ(メインユニット部-その1)

**(所要時間:各約5分)**

10-1. 屋根Ass'yを外します。(4項参照)
10-2. 次のネジを外すことにより、基板・アッセンブリを外すことができます。

| Circuit board and Assembly | Ref. No. | Screw | | QTY | Fig. |
|---|---|---|---|---|---|
| SWX *1 | 41 | Board Spacer (VU264400) | **ボードスペーサー** | 4 | 10 |
| PK Connector Assembly | 51A | Bind Head Tapping Screw-1 3.5x12 MFZN2Y (EP030240) | **＋バインドTP1種** | 2 | 10 |

*1 Be careful of insertion position of spacer when you install the circuit board. Must not use spacer inserted in the reverse once.
***1 取り付けるときは、ボードスペーサーの向きに注意してください。一度でも逆差ししたスペーサーは使用しないようにしてください。**

| Circuit board and Assembly | Ref. No. | Screw | | QTY | Fig. |
|---|---|---|---|---|---|
| Power Transformer (電源トランス) | 103 | Bind Head Screw 4.0x14 MFZN2Y (EG340210) | ＋バインド小ネジ | 4 | 10 |
| Power Transformer (電源トランス) | 103 | Truss Head Screw 4.0x20 MFZN2Y (VL445800) | ＋トラス小ネジ | 4 | 10 |
| (U.S.A. model only) | 106A | Bind Head Tapping Screw-1 3.5x12 MFZN2Y (EP030240) | ＋バインドTP1種 | 2 | 10 |
| MA Cover (U.S.A. model only) | 106B | Bind Head Tapping Screw-1 3.5x12 MFZN2Y (EP030240) | ＋バインドTP1種 | 4 | 10 |
| MA60 Assembly | 106C | Bind Head Tapping Screw-1 3.5x12 MFZN2Y (EP030240) | ＋バインドTP1種 | 2 | 10 |
| DM Cover Assembly (U.S.A. model only) | 106D | Bind Head Tapping Screw-1 3.5x12 MFZN2Y (EP030240) | ＋バインドTP1種 | 7 | 10 |

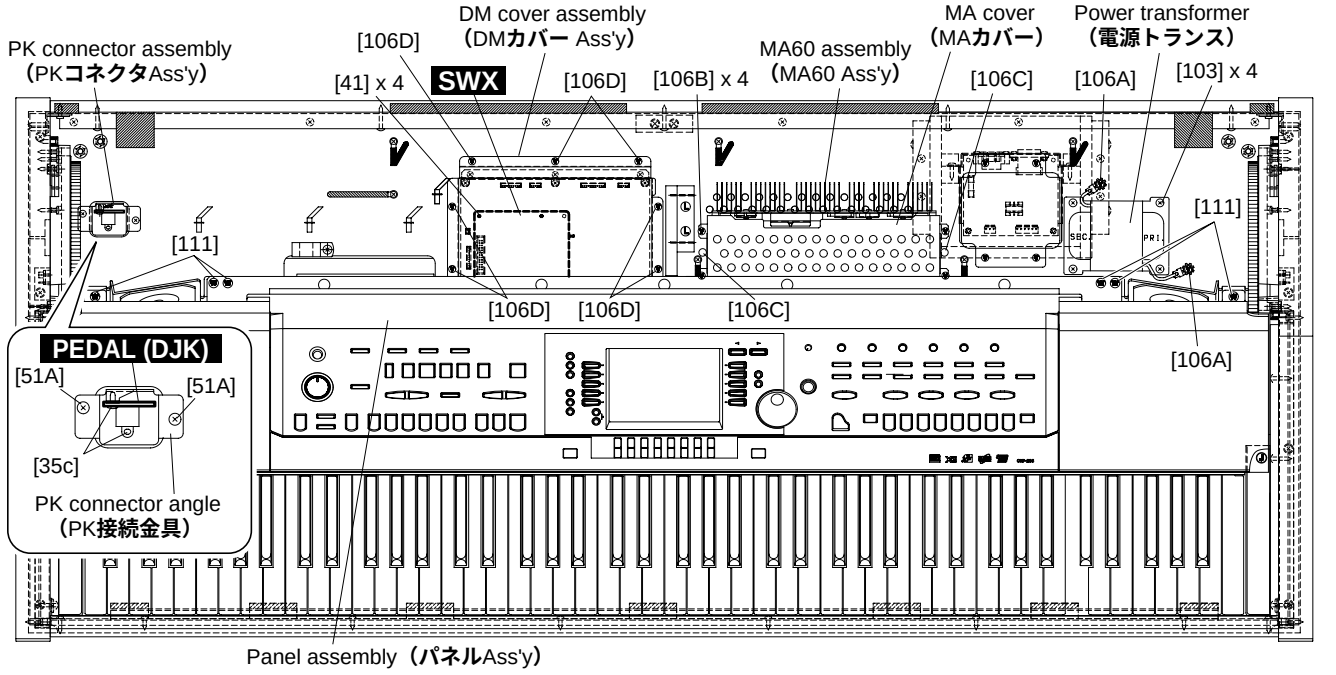


[35c]: Bind Head Tapping Screw-B 3.0x8 MFZN2BL (EP600190)
＋バインドBタイト

[111]: Bind Head Tapping Screw-B 4.0x10 MFZN2Y (EP640130)
＋バインドBタイト

Fig. 10 (図10)

## 11. PEDAL (DJK) Circuit Board

**(Time required : About 10 minutes)**

11-1. Remove the back board assembly. (See procedure 5)
11-2. Disconnect the PK-LF cable. (Fig. 11)
11-3. Remove the top board assembly. (See procedure 4)
11-4. Remove the PK connector assembly. (See procedure 10)
11-5. Remove the two (2) screws marked [35c]. The PEDAL (DJK) circuit board can then be removed from the PK connector angle. (Fig. 1, Fig. 10)

## 11. PEDAL(DJK)シート (所要時間:約10分)

11-1. 裏板Ass'yを外します。(5項参照)
11-2. PKケーブルを外します。(図11)
11-3. 屋根Ass'yを外します。(4項参照)
11-4. PKコネクタAss'yを外します。(10項参照)
11-5. [35c]のネジ2本を外し、ペダル接続金具からPEDAL(DJK)シートを外します。(図1、図10)

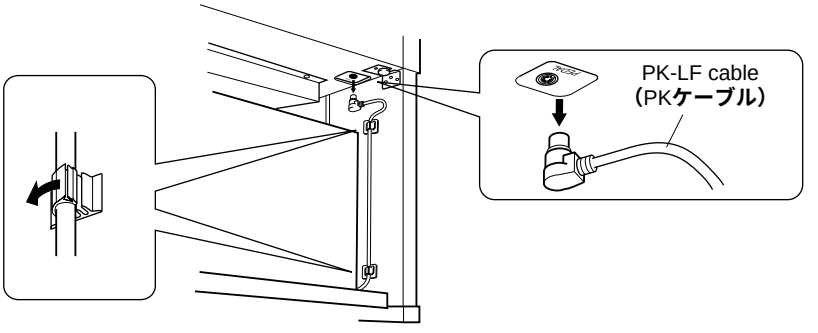


Fig. 11 (図11)

## 12. MA60 Circuit Board

**(Time required : About 15 minutes)**

12-1. Remove the top board assembly. (See procedure 4)

12-2. Remove the MA60 assembly. (See procedure 10)

12-3 Remove the five (5) screws marked [1B], the four (4) screws marked [2A] and the screw marked [3D]. The MA60 circuit board can then be removed. (Fig. 12)

## 12. MA60シート（所要時間:約15分）

12-1. 屋根Ass'yを外します。(4項参照)

12-2. MA60 Ass'yを外します。(10項参照)

12-3. [1B]のネジ5本、[2A]のネジ4本、[3D]のネジ1本を外し、MA60シートを外します。(図12)

**• MA60 Assembly（MA60 Ass'y）**

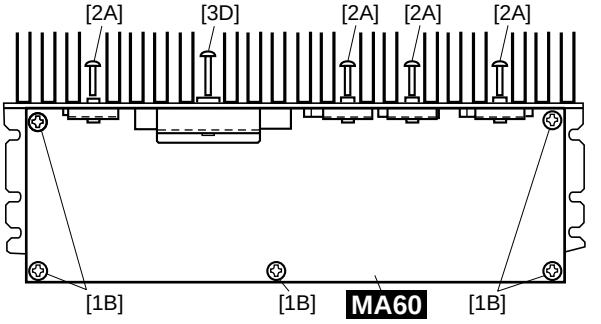


[1B]: Bind Head Tapping Screw-B 4.0x8 MFZN2Y (EP640410)
**＋バインドBタイト**
[2A]: Bind Head Tapping Screw-B 3.0x10 MFZN2Y (EP600220)
**＋バインドBタイト**
[3D]: Bind Head Tapping Screw-B 3.0x16 MFZN2Y (EP600390)
**＋バインドBタイト**

Fig. 12（**図12**）

## 13. Key Cover Assembly

**(Time required : About 10 minutes)**

13-1. Close the key cover.

13-2. Remove the top board assembly. (See procedure 4)

13-3. Remove the screw marked [74]. The stopper (L) can then be removed. (Fig. 13)

*** The stopper (R) can then be removed in the same manner.**

13-4. Remove the screw marked [27A]. The rack cover (L) can then be removed. (Fig. 13)

*** The rack cover (R) can then be removed in the same manner.**

13-5. Set the left end and the right end of the rod at the slits of the guide and then lift the rear key cover assembly. (Fig. 14)

## 13. スライド蓋Ass'y（所要時間:約10分）

13-1. スライド蓋を閉じます。

13-2. 屋根Ass'yを外します。(4項参照)

13-3. [74]のネジを1本外し、回転止め(L)を外します。(図13)

※ **回転止め(R)も同様に外します。**

13-4. [27A]のネジを1本外し、ラックカバー(L)を外します。(図13)

※ **ラックカバー(R)も同様に外します。**

13-5. 連動棒をラックの抜き口に合わせて、スライド蓋後部を上に持ち上げます。(図14)

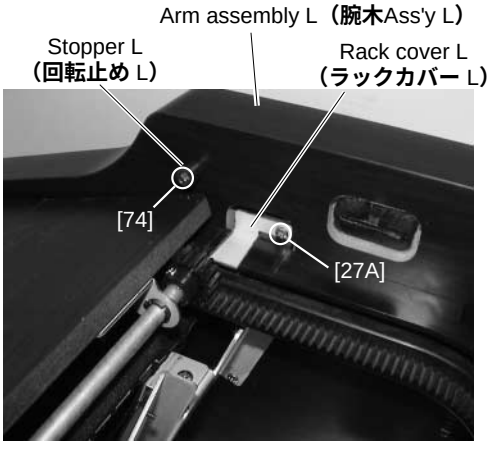


[27A]: Bind Head Tapping Screw-B 3.0x8 MFZN2Y (EP600250)
**＋バインドBタイト**
[74]: Flat Head Tapping Screw-1 4.0x20 MFZN2Y (EM040080)
**＋皿TP1種**

Fig. 13（**図13**）




Fig. 14（**図14**）

13-6. Lean slightly the key cover assembly so that the guide pin can be removed from the guide rail. (Fig. 15)

* **When removing, be sure not to make scratches on the side cover.**

* **When reinstalling the key cover assembly, apply a masking shield tape around the guide rail to prevent from making scratches on the assembly.**

13-6. スライド蓋Ass'yを少し斜めにして、ガイドピンをガイドレールより外します。(図15)

※ **腕木に傷をつけないように注意します。**

※ **組み付けのときには、ガイドレールの周囲にマスキングテープを貼り、傷がつかないようにします。**

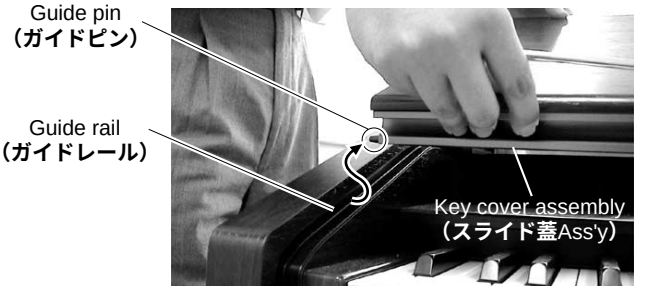


Fig. 15 (図15)

## 14. Panel Assembly

**(Time required : About 15 minutes)**

14-1. Remove the top board assembly. (See procedure 4)

14-2. Remove the key cover assembly. (See procedure 13)

14-3. Remove the six (6) screws marked [111]. The panel assembly can then be removed. (Fig. 10)

## 14. パネルAss'y (所要時間:約15分)

14-1. 屋根Ass'yを外します。(4項参照)

14-2. スライド蓋Ass'yを外します。(13項参照)

14-3. [111]のネジ6本を外し、パネルAss'yを外します。(図10)

## 15. Circuit Boards & Assemblies (Main Unit-PART2) (Time required : About 20 minutes each)

15-1. Remove the top board assembly. (See procedure 4)

15-2. Remove the key cover assembly. (See procedure 13)

15-3. Remove the panel assembly. (See procedure 14)

15-4. Each circuit board and assembly can be removed by removing its fixing screws as listed below.

## 15. 基板とアッセンブリ(メインユニット部-その2) (所要時間:各約20分)

15-1. 屋根Ass'yを外します。(4項参照)

15-2. スライド蓋Ass'yを外します。(13項参照)

15-3. パネルAss'yを外します。(14項参照)

15-4. 次のネジを外すことにより、基板・アッセンブリを外すことができます。

| Circuit board and Assembly | Ref. No. | Screw | | QTY | Fig. |
|---|---|---|---|---|---|
| DM *1 | 27B | Bind Head Tapping Screw-B 3.0x8 MFZN2Y (EP600250) | ＋バインドBタイト | 6 | 16 |
| NET1 | 44 | Bind Head Tapping Screw-1 3.5x20 MFZN2Y (EP030470) | ＋バインドTP1種 | 4 | 16 |
| Monitor Speaker (R) (モニタースピーカ(R)) | 37c | Bind Head Tapping Screw-B 3.0x8 MFZN2BL (EP600190) | ＋バインドBタイト | 4 | 17 |
| Monitor Speaker (L) (モニタースピーカ(L)) | 38c | Bind Head Tapping Screw-B 3.0x8 MFZN2BL (EP600190) | ＋バインドBタイト | 4 | 17 |
| Rack Assembly (L, R) (ラックAss'y (L, R)) | 8B | Bind Head Tapping Screw-1 3.5x20 MFZN2Y (EP030470) | ＋バインドTP1種 | 10 | 18 |

*1 Remove the SWX circuit board before removing DM circuit board.

*1 **DMシートを外す時は、先にSWXシートを外します。**

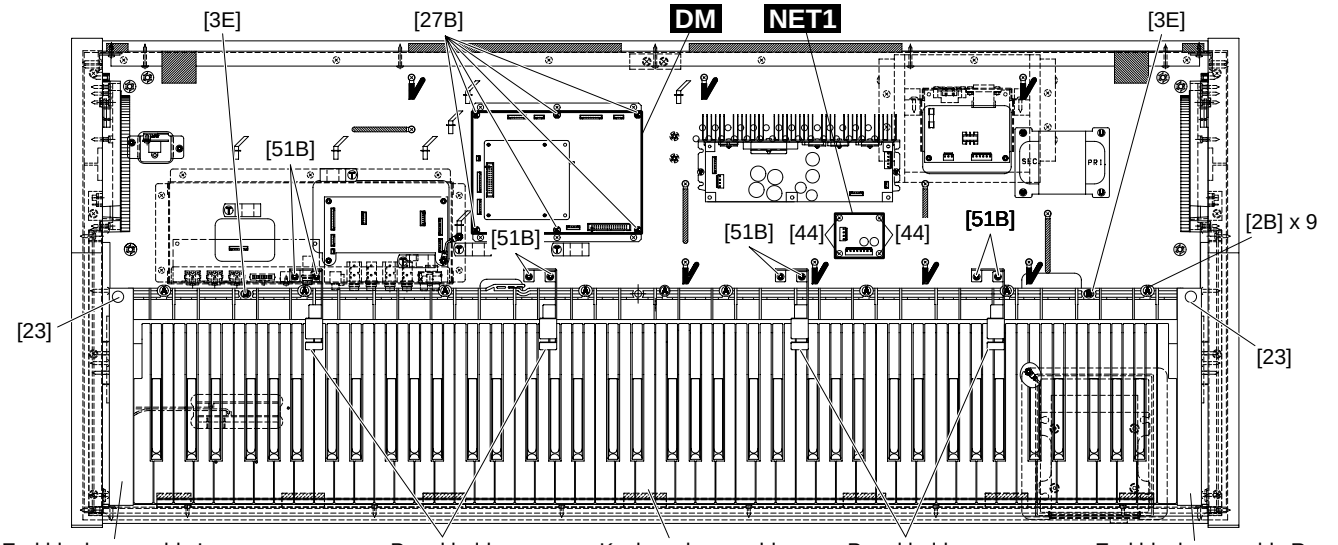


[2B]: Pan Head Screw PW 5.0x25 MFZN2Y (VV040700)
＋ナベ小ネジ
[3E]: Bind Head Tapping Screw-1 4.0x14 MFZN2Y (EP040230)
＋バインドTP1種
[23]: Truss Head Tapping Screw-1 3.5x30 MFZN2Y (VA076400)
＋トラスTP1種
[51B]: Bind Head Tapping Screw-1 3.5x12 MFZN2Y (EP030240)
＋バインドTP1種

Fig. 16（図16）

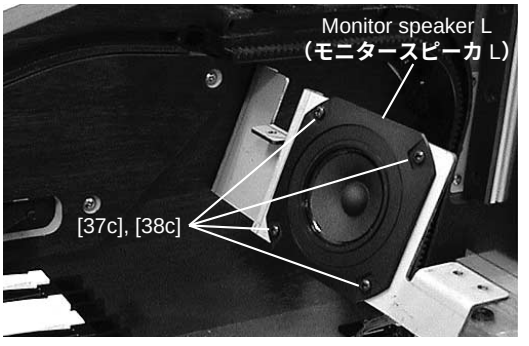


Fig. 17（図17）

[8B]: Five each of the right and left.
（左右5本ずつです。）

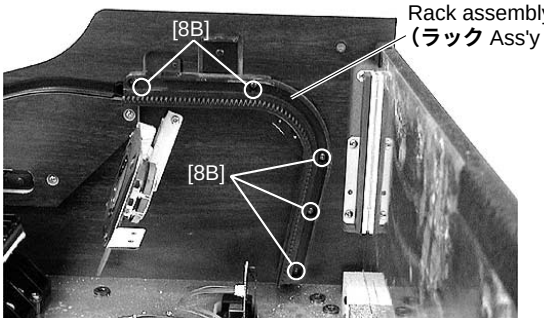


Fig. 18（図18）

## 16. Circuit Boards & Assemblies (Panel Assembly)

**(Time required : About 20 minutes each)**

16-1. Remove the top board assembly. (See procedure 4)
16-2. Remove the key cover assembly. (See procedure 13)
16-3. Remove the panel assembly. (See procedure 14)
16-4. Each circuit board and assembly can be removed by removing its fixing screws as listed below.

## 16. 基板とアッセンブリ（パネルAss'y部）

**(所要時間：各約20分)**

16-1. 屋根Ass'yを外します。(4項参照)
16-2. スライド蓋Ass'yを外します。(13項参照)
16-3. パネルAss'yを外します。(14項参照)
16-4. 次のネジを外すことにより、基板・アッセンブリを外すことができます。

| Circuit board and Assembly | Ref. No. | Screw | | QTY | Fig. |
|---|---|---|---|---|---|
| INV | 30 | Bind Head Tapping Screw-B 3.0x8 MFZN2Y (EP600250) | ＋バインドBタイト | 4 | 19 |
| Power Switch Assembly(PSW束線) | 58A | Bind Head Tapping Screw-B 3.0x8 MFZN2BL (EP600190) | ＋バインドBタイト | 2 | 19 |
| PNL | 58B | Bind Head Tapping Screw-B 3.0x8 MFZN2BL (EP600190) | ＋バインドBタイト | 14 | 19 |
| PNR | 58C | Bind Head Tapping Screw-B 3.0x8 MFZN2BL (EP600190) | ＋バインドBタイト | 15 | 19 |
| LCD Assembly | 58D | Bind Head Tapping Screw-B 3.0x8 MFZN2BL (EP600190) | ＋バインドBタイト | 3 | 19 |
| | 66 | Bind Head Tapping Screw-B 3.0x10 MFZN2BL (EP600140) | ＋バインドBタイト | 1 | 19 |
| MV | 58E | Bind Head Tapping Screw-B 3.0x8 MFZN2BL (EP600190) | ＋バインドBタイト | 3 | 19 |
| | | Knob (MASTER VOLUME) | Vツマミ | 1 | 19 |

| Circuit board and Assembly | Ref. No. | Screw | | QTY | Fig. |
|---|---|---|---|---|---|
| ENC | 58F | Bind Head Tapping Screw-B 3.0x8 MFZN2BL (EP600190) | ＋バインドBタイト | 4 | 19 |
| | | Encoder Knob (DATA ENTRY) | エンコーダツマミ | 1 | 19 |
| Panel Sub Assembly (R) | 59A | Bind Head Tapping Screw-1 3.5x10 MFZN2Y (EP030230) | ＋バインドTP1種 | 3 | 19 |
| | 59B | Bind Head Tapping Screw-1 3.5x10 MFZN2Y (EP030230) | ＋バインドTP1種 | 3 | 19 |
| Panel Sub Assembly (L) | 59C | Bind Head Tapping Screw-1 3.5x10 MFZN2Y (EP030230) | ＋バインドTP1種 | 3 | 19 |
| | 59D | Bind Head Tapping Screw-1 3.5x10 MFZN2Y (EP030230) | ＋バインドTP1種 | 3 | 19 |
| GL Case Assembly | 59B | Bind Head Tapping Screw-1 3.5x10 MFZN2Y (EP030230) | ＋バインドTP1種 | 3 | 19 |
| | 59D | Bind Head Tapping Screw-1 3.5x10 MFZN2Y (EP030230) | ＋バインドTP1種 | 3 | 19 |
| | 60A | Bind Head Tapping Screw-B 2.6x8 MFZN2BL (VB096700) | ＋バインドBタイト | 8 | 19 |
| PNCR *1 | 60B | Bind Head Tapping Screw-B 2.6x8 MFZN2BL (VB096700) | ＋バインドBタイト | 2 | 19 |
| PNCL *1 | 60C | Bind Head Tapping Screw-B 2.6x8 MFZN2BL (VB096700) | ＋バインドBタイト | 3 | 19 |
| PNCB *2 | 60D | Bind Head Tapping Screw-B 2.6x8 MFZN2BL (VB096700) | ＋バインドBタイト | 4 | 19 |

*1 Remove the LCD Assembly before removing PNCL circuit board and PNCR circuit board.

*2 Remove the GL case assembly before removing PNCB circuit board.

***1 PNCLシート、PNCRシートを外すときは、先にLCD Ass'yを外します。**

***2 PNCBシートを外すときは、先にGLケースAss'yを外します。**

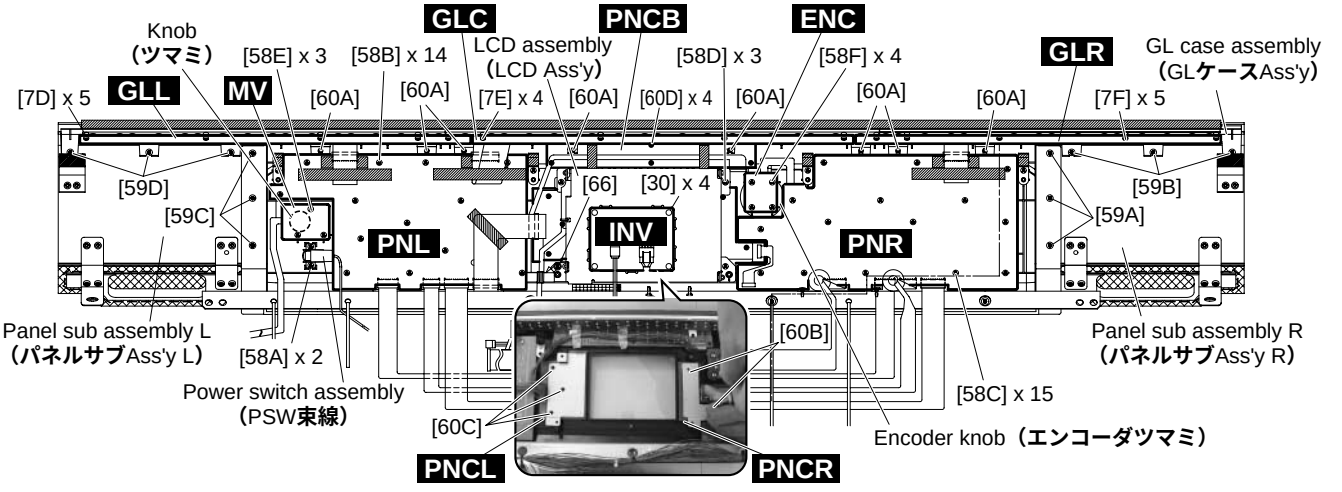


[7]: Bind Head Tapping Screw-B 2.6x8 MFZN2BL (VB096700) **＋バインドBタイト**

Fig. 19（**図**19）

## 17. GLL Circuit Board, GLC Circuit Board, GLR Circuit Board

**(Time required : About 25 minutes each)**

17-1. Remove the top board assembly. (See procedure 4)

17-2. Remove the key cover assembly. (See procedure 13)

17-3. Remove the panel assembly. (See procedure 14)

17-4. Remove the GL case assembly. (See procedure 16)

17-5. Remove the five (5) screws marked [7D]. The GLL circuit board can then be removed. (Fig. 19)

17-6. Remove the four (4) screws marked [7E]. The GLC circuit board can then be removed. (Fig. 19)

17-7. Remove the five (5) screws marked [7F]. The GLR circuit board can then be removed. (Fig. 19)

## 17. GLLシート、GLCシート、GLRシート

**(所要時間：各約25分)**

17-1. 屋根Ass'yを外します。(4項参照)

17-2. スライド蓋Ass'yを外します。(13項参照)

17-3. パネルAss'yを外します。(14項参照)

17-4. GLケースAss'yを外します。(16項参照)

17-5. [7D]のネジ5本を外し、GLLシートを外します。(図19)

17-6. [7E]のネジ4本を外し、GLCシートを外します。(図19)

17-7. [7F]のネジ5本を外し、GLRシートを外します。(図19)

## 18. End Block Assembly (L, R)

**(Time required : About 15 minutes)**

18-1. Remove the top board assembly. (See procedure 4)
18-2. Remove the key cover assembly. (See procedure 13)
18-3. Remove the panel assembly. (See procedure 14)
18-4. Remove the screw marked [23]. The end block assembly can then be removed. (Fig. 16)

* **The left and right end block assembly can then be removed in the same manner.**

## 19. Keyboard Assembly

**(Time required : About 20 minutes)**

19-1. Remove the top board assembly. (See procedure 4)
19-2. Remove the key cover assembly. (See procedure 13)
19-3. Remove the panel assembly. (See procedure 14)
19-4. Remove the end block assembly L and R. (See procedure 18)
19-5. Remove the eight (8) screws marked [51B]. The four panel holders can then be removed. (Fig. 16)
19-6. Remove the nine (9) screws marked [2B] and the tow (2) screws marked [3E]. The keyboard assembly can then be removed. (Fig. 16)

## 20. Main Unit (Time required : About 10 minutes)

20-1. Remove the back board assembly. (See procedure 5)
20-2. Disconnect the AC cord, the Speaker cable, and the PK-LF cable. (Fig. 11, Fig. 20)
20-3. Spread a soft cloth like a blanket on the floor where the main unit is to be placed in advance.
20-4. Remove the four (4) screws marked [S1]. (Fig. 21)
20-5. Move the main unit rearward, lift it and place it on the cloth gently.

* **For safety, this work should be done by two persons.**
* **When removing the main unit from the stand, use care not to have your finger caught.**

## 18. 拍子木Ass'y（L・R）（所要時間：約15分）

18-1. 屋根Ass'yを外します。(4項参照)
18-2. スライド蓋Ass'yを外します。(13項参照)
18-3. パネルAss'yを外します。(14項参照)
18-4. [23]のネジ1本を外し、拍子木Ass'yを外します。(図16)

※ **左右の拍子木Ass'yは同様に外せます。**

## 19. 鍵盤Ass'y（所要時間：約20分）

19-1. 屋根Ass'yを外します。(4項参照)
19-2. スライド蓋Ass'yを外します。(13項参照)
19-3. パネルAss'yを外します。(14項参照)
19-4. 拍子木Ass'y(L・R)を外します。(18項参照)
19-5. [51B]のネジ8本を外し、パネル固定金具4個を外します。(図16)
19-6. [2B]のネジ9本、[3E]のネジ2本を外し、鍵盤Ass'yを外します。(図16)

## 20. メインユニット（所要時間：約10分）

20-1. 裏板Ass'yを外します。(5項参照)
20-2. 電源コード、スピーカケーブル、PKケーブルを外します。(図11、図20)
20-3. あらかじめ、メインユニットを置く場所に毛布などの柔らかい布を敷いておきます。
20-4. [S1]のネジ4本を外します。(図21)
20-5. メインユニットを後方へずらした後、持ち上げて布の上に静かに置きます。

※ **安全の為、必ず二人で行ってください。**
※ **スタンドからメインユニットを外すとき、過って指を挟まないように十分注意してください。**

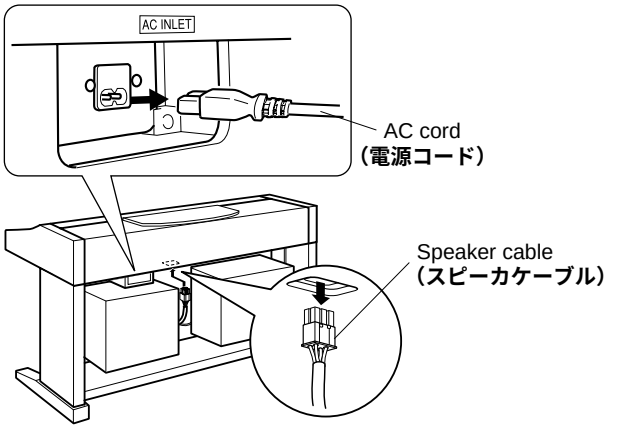


Fig. 20（図20）

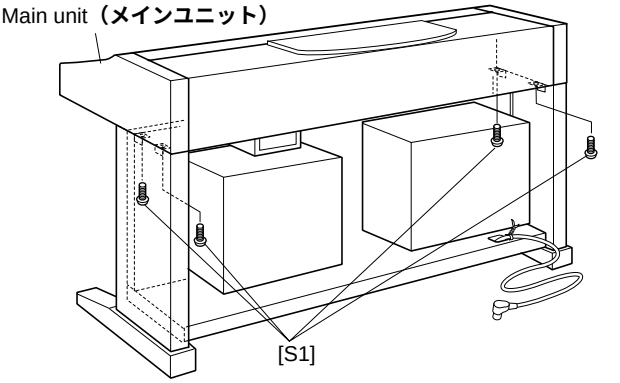


[S1]: Bind Head Screw 6.0x16 MFZN2BL (EG360020)
＋バインド小ネジ

Fig. 21（図21）

## 21. Arm Assembly (L, R)

**(Time required : About 40 minutes)**

21-1. Remove the top board assembly. (See procedure 4)
21-2. Remove the back board assembly. (See procedure 5)
21-3. Remove the key cover assembly. (See procedure 13)
21-4. Remove the panel assembly. (See procedure 14)
21-5. Remove the end block assembly L and R. (See procedure 18)
21-6. Remove the keyboard assembly. (See procedure 19)
21-7. Remove the main unit. (See procedure 20)
21-8. Remove the four (4) screws marked [15A], the two (2) screws marked [18A] and the three (3) screws marked [18B]. The arm assembly R can then be removed. (Fig. 1, Fig. 22)

*** The arm assembly L can then be removed in the same manner.**

## 21. 腕木Ass'y（L・R）（所要時間：約40分）

21-1. 屋根Ass'yを外します。(4項参照)
21-2. 裏板Ass'yを外します。(5項参照)
21-3. スライド蓋Ass'yを外します。(13項参照)
21-4. パネルAss'yを外します。(14項参照)
21-5. 拍子木Ass'y(L・R)を外します。(18項参照)
21-6. 鍵盤Ass'yを外します。(19項参照)
21-7. メインユニットを外します。(20項参照)
21-8. [15A]のネジ4本、[18A]のネジ2本、[18B]のネジ3本を外し、腕木Ass'y Rを外します。(図1、図22)

※ **腕木Ass'y Lも同様にして外します。**

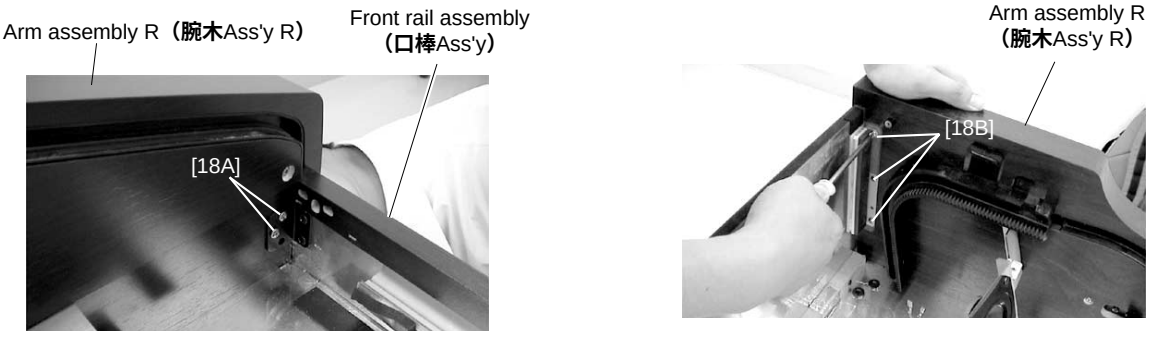


[18]: Bind Head Tapping Screw-1 3.5x16 MFZN2Y (EP030190)　＋バインドTP1種
Fig. 22（図22）

## 22. Back Top Board Assembly

**(Time required : About 30 minutes)**

22-1. Remove the top board assembly. (See procedure 4)
22-2. Remove the back board assembly. (See procedure 5)
22-3. Remove the key cover assembly. (See procedure 13)
22-4. Remove the panel assembly. (See procedure 14)
22-5. Remove the rack assembly L. (See procedure 15)
22-6. Detach the tape and the three (3) screws marked [7G]. (Fig. 23)
22-7. Remove the six (6) screws marked [15B] and the three (3) screws marked [18B]. The back top board assembly can then be removed. (Fig. 1, Fig. 22)

## 22. 背面框Ass'y（所要時間：約30分）

22-1. 屋根Ass'yを外します。(4項参照)
22-2. 裏板Ass'yを外します。(5項参照)
22-3. スライド蓋Ass'yを外します。(13項参照)
22-4. パネルAss'yを外します。(14項参照)
22-5. ラックAss'y(L)を外します。(15項参照)
22-6. 摺動テープをはがし、[7G]のネジ3本を外します。(図23)
22-7. [15B]のネジ6本、[18B]のネジ3本を外し、背面框Ass'yを外します。(図1、図22)

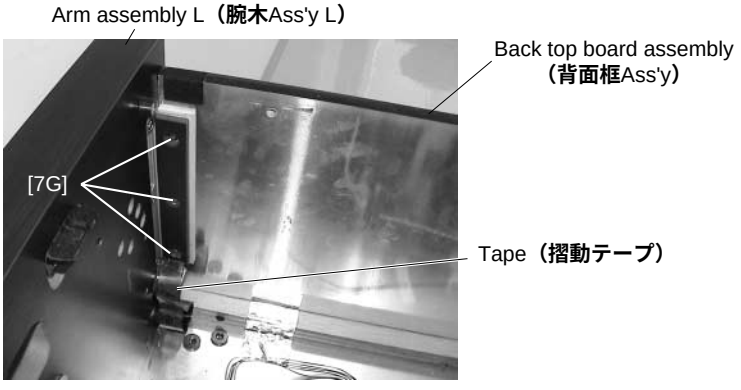


[7G]: Bind Head Tapping Screw-1 3.5x14 MFZN2Y (EP030170)　＋バインドTP1種
Fig. 23（図23）

## 23. Front Board Assembly

**(Time required : About 20 minutes)**

23-1. Remove the back board assembly. (See procedure 5)
23-2. Remove the main unit. (See procedure 20)
23-3. Remove the speaker box assembly L and R. (See procedure 6)
23-4. Remove the four (4) screws marked [S2B] and the two (2) screws marked [S2C]. The front board assembly can then be removed. (Fig. 24)

## 23. 前板Ass'y（所要時間:約20分）

23-1. 裏板Ass'yを外します。(5項参照)
23-2. メインユニットを外します。(20項参照)
23-3. SP. BOX Ass'y(L・R)を外します。(6項参照)
23-4. [S2B] のネジ4本、[S2C]のネジ2本を外し、前板Ass'yを外します。(図24)

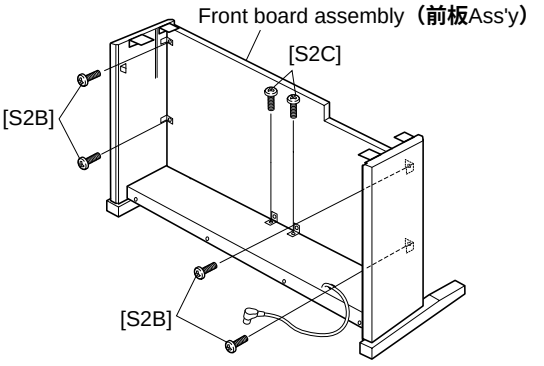


**CVP-206/CVP-206M**
[S2]: Truss Head Screw 4.0x14 MFZN2BL (VB931700) ＋トラス小ネジ
**CVP-206C**
[S2]: Truss Head Screw 4.0x14 MFC2BR (WA596100) ＋トラス小ネジ

Fig. 24（図24）

## 24. Side Board Assembly (L, R)

**(Time required : About 15 minutes)**

24-1. Remove the back board assembly. (See procedure 5)
24-2. Remove the main unit. (See procedure 20)
24-3. Remove the two (2) screws marked [S2B] and the two (2) screws marked [S3]. The side board assembly R can then be removed. (Fig. 25)

*** The side board assembly L can then be removed in the same manner.**

## 24. 側板Ass'y（L・R）（所要時間:約15分）

24-1. 裏板Ass'yを外します。(5項参照)
24-2. メインユニットを外します。(20項参照)
24-3. [S2B]のネジ2本、[S3]のネジ2本を外し、側板Ass'y Rを外します。(図25)

※ **側板Ass'y Lも同様にして外します。**

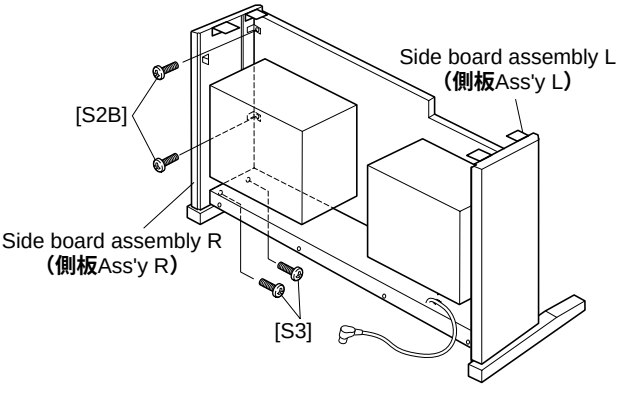


**CVP206/CVP-206M**
[S2B]: Truss Head Screw 4.0x14 MFZN2BL (VB931700) ＋トラス小ネジ
[S3]: Truss Head Screw 6.0x25 MFZN2BL (VQ448400) ＋トラス小ネジ
**CVP206C**
[S2B]: Truss Head Screw 4.0x14 MFC2BR (WA596100) ＋トラス小ネジ
[S3]: Truss Head Screw 6.0x25 MFZN2BL (VQ448400) ＋トラス小ネジ

Fig. 25（図25）

## 25. Stand Base Assembly (L, R)

**(Time required : About 10 minutes)**

25-1. With a soft cloth like a blanket placed on the floor, place the main unit on its back board gently. (Fig. 26)

*** For safety, this work should be done by two persons.**

25-2. Put thick books or the like under the main unit at both sides. (Fig.26)

25-3. Remove the three (3) screws marked [8C]. The stand base assembly L can then be removed. (Fig. 26)

*** The stand base assembly R can then be removed in the same manner.**

## 25. 妻土台Ass'y（L・R）（所要時間：約10分）

25-1. 毛布などの柔かい布を床に敷いて、鍵盤側を上にして本体を床に置きます。(図26)

※ **安全のために、かならず二人で作業してください。**

25-2. 厚い本（またはそれに類似するもの）を側板の下側に置きます。(図26)

25-3. [8C]のネジ3本を外し、妻土台Ass'y Lを外します。(図26)

※ **妻土台Ass'y Rも同様にして外します。**

## 26. Pedal Box Assembly, Pedal Assembly

**(Time required : About 15 minutes)**

26-1. Remove the back board assembly. (See procedure 5)

26-2. Disconnect the PK-LF cable. (Fig. 11)

26-3. Remove the two (2) screws marked [S2C]. (Fig. 24)

26-4. With a soft cloth like a blanket placed on the floor, place the main unit on its back board gently. (Fig. 27)

*** For safety, this work should be done by two persons.**

26-5. Remove the four (4) screws marked [S3]. The pedal box assembly can then be removed. (Fig. 27)

26-6. Remove the eight (8) screws marked [6E] and the screw marked [7H]. The pedal assembly can then be removed. (Fig. 28)

## 26. ペダルBox Ass'y、ペダルAss'y

**（所要時間：約15分）**

26-1. 裏板Ass'yを外します。(5項参照)

26-2. PKケーブルを外します。(図11)

26-3. [S2C]のネジ2本を外します。(図24)

26-4. 毛布などの柔かい布を床に敷いて、鍵盤側を上にして本体を床に置きます。(図27)

※ **安全のために、かならず二人で作業してください。**

26-5. [S3]のネジ4本を外し、ペダルBox Ass'yを外します。(図27)

26-6. [6E]のネジ8本、[7H]のネジ1本を外し、ペダルAss'yを外します。(図28)

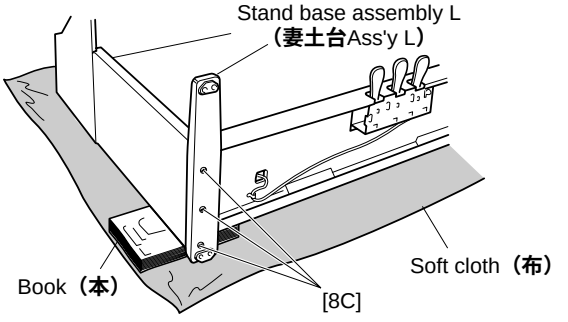


[8C]: Pan Head Tapping Screw-1 4.0x65 MFZN2Y (VV444000)
＋ナベTP1種

Fig. 26（図26）

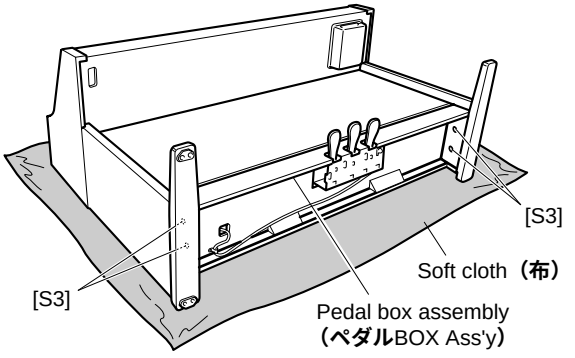


[S3]: Truss Head Screw 6.0x25 MFZN2BL (VQ448400)
＋トラス小ネジ

Fig. 27（図27）

**• Pedal Box Assembly（ペダル Box Ass'y）**
**< Bottom view >**

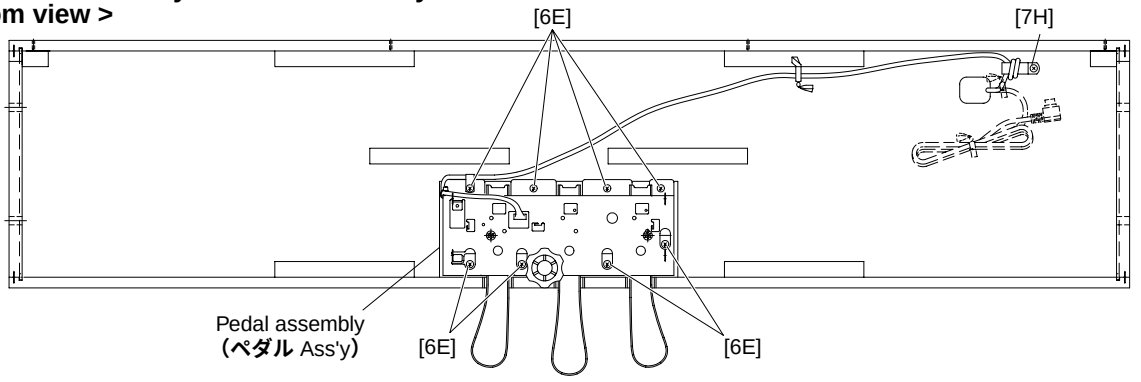


[6E]: Bind Head Tapping Screw-1 4.0x14 MFZN2Y (EP040230)
＋バインドTP1種

[7H]: Truss Head Tapping Screw-1 4.0x12 MFZN2BL (03747270)
＋トラスTP1種

Fig. 28（図28）

## 27. Disassembling the Keyboard

**(Time required : About 15 minutes)**

*** After inserting a round stick (Rod:TX000670) between the frame and the keys, remove the circuit boards. (Fig. 29)**

27-1. **GH-D SW L Circuit Board**

Remove the seven (7) screws marked [260A]. The GH-D SW L circuit board can then be removed. (Fig. 30)

27-2. **GH-D H Circuit Board**

Remove the ten (10) screws marked [260B]. The GH-D SW H circuit board can then be removed. (Fig. 30)

*** Keys can be removed without removing the circuit boards.**

*** After removing the GH-D SW L and GH-D SW H circuit boards, and the rubbers can then be removed.**

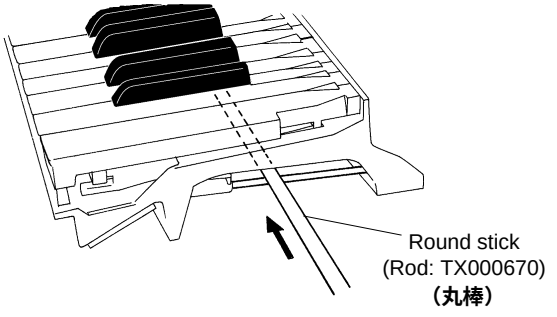


Fig. 29 **（図29）**

## 27. GHD鍵盤の分解

**（所要時間：約15分）**

**※ シートをはずす前に、接点ゴムを歪ませないように、フレームとハンマーの間に丸棒（ロッド：TX000670）を挿入しておきます。（図29）**

27-1. **GH-D SW Lシート**

[260A]のネジ7本を外し、GH-D SW Lシートを外します。（図30）

27-2. **GH-D SW Hシート**

[260B]のネジ10本を外し、GH-D SW Hシートを外します。（図30）

**※ 白鍵と黒鍵は、GH-D SW Lシート、GH-D SW Hシートを外さなくても、外すことができます。**

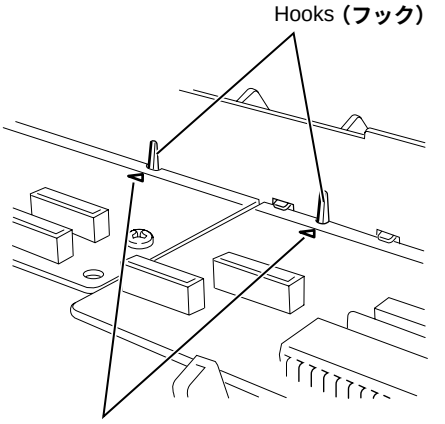


Fig. 30-1 **（図30-1）**

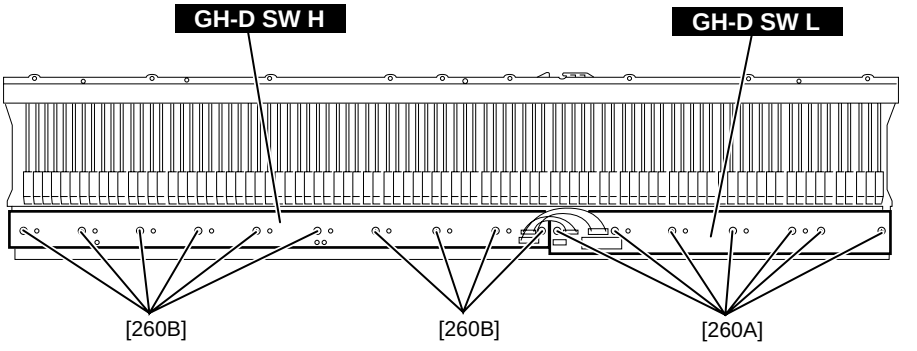


[260]: Bind Head Tapping Screw-P 3.0x10 MFZN2 (VT413400) **＋バインドPタイト**

Fig. 30 **（図30）**

27-3. **White key**

Insert a thin plate between the white keys, near the triangle mark around the fulcrum of the key, and press down the stopper marked [A] to remove the key.
(Fig. 31, Fig. 32)

*** Take care not to damage the key spring when removing a key.**

*** A black key can be removed after the white keys on either side have been removed.**

27-3. **白鍵**

薄い金尺状のものを鍵盤の間に挿入して（白鍵盤支点付近の三角マークの示す方向側の隙間）[A]のストッパーを下げ、白鍵を前方に少しずらして、持ち上げて外します。（図31、図32）

**※ このとき、白鍵を前方にずらしすぎてスプリングを傷めないように十分注意して作業をしてください。**

**※ 黒鍵は、両隣の白鍵を外すと、外すことができます。**

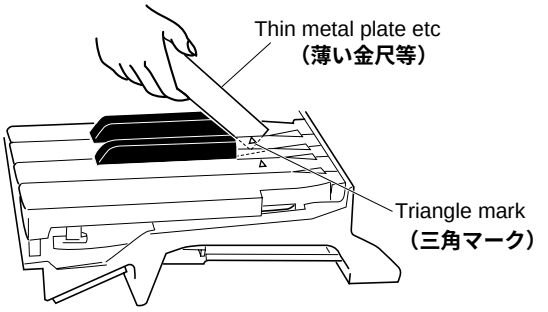


Fig. 31（図31）

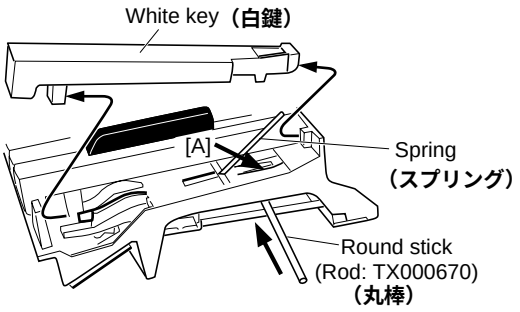


Fig. 32（図32）

27-4. **Hammer, White Key**

After a key has been removed, push a key spring down once to take it out of the hook. (Fig. 33)

Place the keyboard assembly upside-down and peel the stopper away. The hammer of the white key can then be removed. (Fig. 34)

* **The hammer of the black key can then be removed in the same manner.**

27-4. **ハンマー白鍵**

白鍵を外し、スプリングを一度下に押し込み、フックから取り外します。(図33)

GHD鍵盤を裏側にし、ストッパー(L88_W)をはがしてハンマー白鍵を外します。(図34)

※ **ハンマー黒鍵もハンマー白鍵と同じようにして外すことができます。**

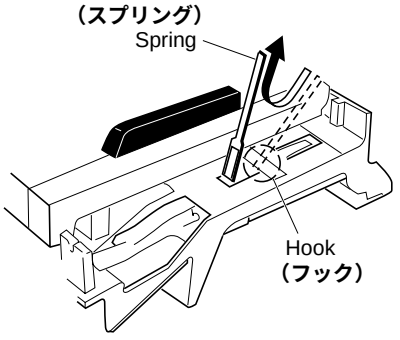


Fig. 33（図33）

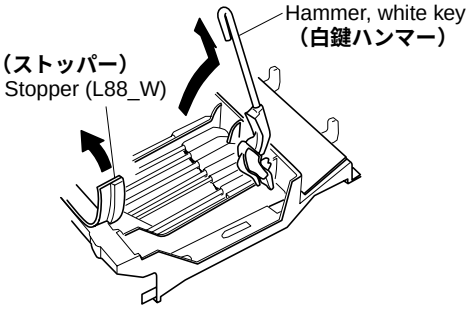


Fig. 34（図34）

27-5. **Rubber contact**

Remove the GH-D circuit board for the involved key. The rubber contacts can then be removed. (Photo 1, 2)

27-5. **接点ゴム**

該当する鍵盤のGH-Dシートを外して、接点ゴムを外します。(写真1、2)




Photo 1（写真1）

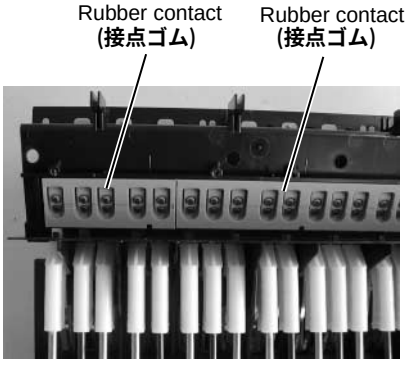


Photo 2（写真2）

## 28. Assembling the Keyboard

**(Time required : About 15 minutes)**

28-1. **Hammer, White Key (Hammer, Black Key)**

Place the keyboard assembly upside-down, insert a hammer assembly into the frame, and put the stopper (L88_W) on. (Fig. 35)

* **There are four (4) kinds of hammers that differ in weight.**

28-2. **Spring**

Place the keyboard assembly rightside up. Fix key springs on the frame by setting one at each slit and pushing down once on each key spring. (Fig. 36)

* **Be careful of the direction of the spring.**

28-3. **White Key (Black Key)**

After a key has been fit to part [C] and key guide, make sure that the spring is fixed to the key and then press down part [B] of the key. (Fig. 37)

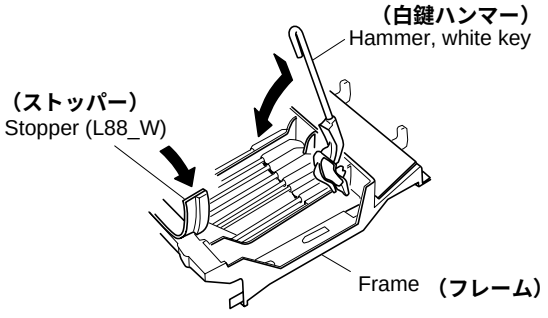


Fig. 35（図35）

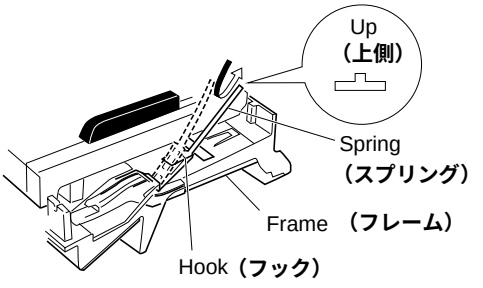


Fig. 36（図36）

28-4. **GH-D SW L Circuit Board**

Tighten the seven (7) screws marked [260A] to fix the GH-D SW L circuit board. (Fig. 30)

28-5. **GH-D SW H Circuit Board**

Tighten the ten (10) screws marked [260B] to fix the GH-D SW H circuit board. (Fig. 30)

* **Install the circuit boards in the keyboard assembly so that the hooks hold it as shown in figure 30-1.**

## 28. GHD鍵盤の組立

**（所要時間：約15分）**

28-1. **ハンマー白鍵（ハンマー黒鍵）**

GHD鍵盤の裏側より、ハンマー白鍵（黒鍵）をフレームに差し込み、ストッパー（L88_W）を取り付けます。（図35）

※ **重りの違いにより四種類のハンマーがあります。取り付けの際に気をつけてください。**

28-2. **スプリング**

GHD鍵盤を表側にして、端が二本に分かれているスプリングの先をハンマー白鍵（黒鍵）の切り込みに合わせて、一度下に押し込んでフレームのフックに取り付けます。（図36）

※ **スプリングの向きに注意してください。**

28-3. **白鍵（黒鍵）**

[C]部とキーガイドに白鍵（黒鍵）を加えさせ、鍵盤の支点内側のばね受け部に、スプリングが確実に入っていることを確認したら、[B]部の上を下方向にゆっくり押し込んで取り付けます。（図37）

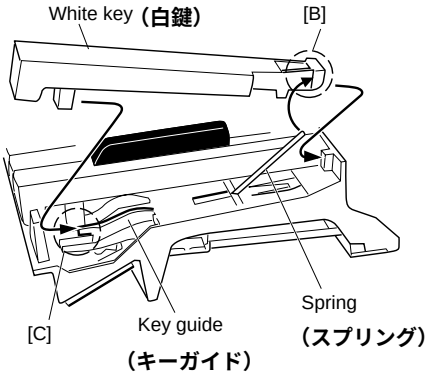


Fig. 37（図37）

28-4. **GH-D SW Lシート**

GH-D SW Lシートを取り付け、[260A]のネジ7本を取り付けます。(図30)

28-5. **GH-D SW Hシート**

GH-D SW Hシートを取り付け、[260B]のネジ10本を取り付けます。(図30)

※ **GH-D SW L/GH-D SW H基板シートを取り付ける際は、フレーム裏側にあるフックと基板の△マークがあっていることを確認してください。（図30-1）**

# ■ LSI PIN DESCRIPTION（LSI端子機能表）

**AD1854JRSRL** (XY782A00) **DAC** (Digital to Analog Converter) . . . . . 30
**AK5351-VF-E2** (XV510A00) **ADC** (Analog to Digital Converter) . . . . . 25
**HD63266F** (XI939A00) **FDC** (Floppy Disk Controller) . . . . . 29
**HD6417709F80B** (XV250B00) **CPU** . . . . . 26
**HG73C205AFD** (XU947C00) **SWX00B** (Tone Generator) . . . . . 27
**JG760082A** (XV481B00) **Gate Array** (Video Out) . . . . . 28
**M38K07M4L-300FP** (X3646100) **CPU** (USB) . . . . . 31
**MBCG46183-129PFV-G** (XV833A00) **SIO4** (Gate Array) . . . . . 28
**MN101C027YB** (XS711200) **CPU** . . . . . 25
**S1D13305F00B100** (XQ595A00) **LCDC** (LCD Controller) . . . . . 30
**YMZ702-D** (XR632A00) **KSN2** (Key Scanner) . . . . . 29

## ● **MN101C027YB** (XS711200) **CPU**

PNR: IC001

| PIN NO. | NAME | I/O | FUNCTION | PIN NO. | NAME | I/O | FUNCTION |
|---|---|---|---|---|---|---|---|
| 1 | S1 | I | Switch matrix data | 33 | S12 | I | Switch matrix data |
| 2 | S2 | I | | 34 | S13 | I | |
| 3 | S3 | I | | 35 | S14 | I | |
| 4 | S4 | I | | 36 | TXD | O | MIDI transmit data |
| 5 | S5 | I | | 37 | S15 | I | Switch matrix data |
| 6 | VREF+ | - | Power supply (+5V, analog) | 38 | S16 | I | |
| 7 | VDD | - | Power supply (+5V) | 39 | S17 | I | |
| 8 | OSC2 | O | Crystal oscillator (8MHz) | 40 | S18 | I | |
| 9 | OSC1 | I | Crystal oscillator (8MHz) | 41 | L16 | O | LED drive data |
| 10 | VSS | - | Ground | 42 | L17 | O | |
| 11 | XI | I | Not used | 43 | L18 | O | |
| 12 | XO | O | Not used | 44 | L19 | O | |
| 13 | MMOD | I | Memory mode select (Grounded) | 45 | L8 | O | |
| 14 | RD0 | O | Rotary encoder data | 46 | L9 | O | |
| 15 | RXD | I | MIDI receive data | 47 | L10 | O | |
| 16 | D0 | O | LED and switch drive data | 48 | L11 | O | |
| 17 | D1 | O | | 49 | L12 | O | |
| 18 | D2 | O | | 50 | L13 | O | |
| 19 | D3 | O | | 51 | L14 | O | |
| 20 | D4 | O | | 52 | L15 | O | |
| 21 | /RST | I | Reset | 53 | L7 | O | LED and switch drive data |
| 22 | D5 | O | LED and switch drive data | 54 | L6 | O | |
| 23 | D6 | O | | 55 | L5 | O | |
| 24 | D7 | O | | 56 | L4 | O | |
| 25 | D8 | O | | 57 | L3 | O | |
| 26 | D9 | O | | 58 | L2 | O | |
| 27 | S6 | I | Switch matrix data | 59 | L1 | O | |
| 28 | S7 | I | | 60 | L0 | O | |
| 29 | S8 | I | | 61 | VREF | - | Grounded |
| 30 | S9 | I | | 62 | AD0 | I | Analog input |
| 31 | S10 | I | | 63 | AD1 | I | Analog input |
| 32 | S11 | I | | 64 | S0 | I | Switch matrix data |

## ● **AK5351-VF-E2** (XV510A00) **ADC** (Analog to Digital Converter)

DM: IC030

| PIN NO. | NAME | I/O | FUNCTION | PIN NO. | NAME | I/O | FUNCTION |
|---|---|---|---|---|---|---|---|
| 1 | AINR+ | I | Analog signal input (R channel +) | 13 | DGND | - | Digital ground |
| 2 | AINR- | I | Analog signal input (R channel -) | 14 | TST4 | I/O | Test mode setting 4 |
| 3 | VREF | O | Reference voltage | 15 | AMODE2 | | Interface clock select 2 |
| 4 | VA | - | Analog power supply | 16 | /PD | I | Power-down mode |
| 5 | AGND | - | Analog ground | 17 | MCLK | I | Master clock input |
| 6 | AINL+ | I | Analog signal input (L channel +) | 18 | SCLK | I/O | Serial data clock |
| 7 | AINL- | I | Analog signal input (L channel -) | 19 | LRCK | I | Input/Output channel clock |
| 8 | TST1 | I/O | Test mode setting 1 | 20 | FSYNC | I/O | Frame synch. clock |
| 9 | HPFE | | HPF on/off | 21 | SDATA | O | Serial data output |
| 10 | TST2 | I/O | Test mode setting 2 | 22 | CMODE | I | Master clock select |
| 11 | TST3 | I/O | Test mode setting 3 | 23 | SMODE1 | I | Interface clock select 1 |
| 12 | VD | - | Digital power supply | 24 | VB | - | Digital power supply |

## ● **HD6417709F80B** (XV250B00) **CPU**

DM: IC018

| PIN NO. | NAME | I/O | FUNCTION | PIN NO. | NAME | I/O | FUNCTION |
|---|---|---|---|---|---|---|---|
| 1 | MD1 | I | Mode control | 105 | CKE/PTK5 | I/O | CK enable / Port K |
| 2 | MD2 | I | | 106 | /RAS3L/PTJ0 | I/O | 3L Row address strobe / Port J |
| 3 | Vcc(RTC) | - | Power supply +3.3V | 107 | /RAS2L/PTJ1 | I/O | 2L Row address strobe / Port J |
| 4 | XTAL2 | O | Crystal oscillator | 108 | /CASLL//CAS/PTJ2 | I/O | LL Column address strobe / Column address strobe / Port J |
| 5 | EXTAL2 | I | | 109 | Vss | - | Ground |
| 6 | Vss(RTC) | - | Ground | 110 | /CASLH/PTJ3 | I/O | LH Column address strobe / Port J |
| 7 | NMI | I | Non-maskable interrupt request | 111 | Vcc | - | Power supply +3.3V |
| 8 | IRQ0//IRL0/PTH0 | I | Interrupt request / Port H | 112 | /CASHL/PTJ4 | I/O | HL Column address strobe / Port J |
| 9 | IRQ1//IRL1/PTH1 | I | | 113 | /CASHH/PTJ5 | I/O | HH Column address strobe / Port J |
| 10 | IRQ2//IRL2/PTH2 | I | | 114 | DACK0/PTD5 | I/O | DMA acknowledge / Port D |
| 11 | IRQ3//IRL3/PTH3 | I | | 115 | DACK1/PTD7 | I/O | |
| 12 | IRQ4/PTH4 | I | | 116 | CAS2L/PTE6 | I/O | 2L Column address strobe / Port E |
| 13 | D31/PTB7 | I/O | Data bus / Port B | 117 | CAS2H/PTE3 | I/O | 2H Column address strobe / Port E |
| 14 | D30/PTB6 | I/O | | 118 | /RAS3U/PTE2 | I/O | 3U Row address strobe / Port E |
| 15 | D29/PTB5 | I/O | | 119 | /RAS2U/PTE1 | I/O | 2U Row address strobe / Port E |
| 16 | D28/PTB4 | I/O | | 120 | PTE0 | I/O | Port E |
| 17 | D27/PTB3 | I/O | | 121 | /BACK | O | Bus acknowledge |
| 18 | D26/PTB2 | I/O | | 122 | /BREQ | I | Bus request |
| 19 | Vss | - | Ground | 123 | /WAIT | I | Hardware wait request |
| 20 | D25/PTB1 | I/O | Data bus / Port B | 124 | /RESETM | I | Manual reset |
| 21 | Vcc | - | Power supply +3.3V | 125 | PTH5//ADTRG | I | Port H / Analog trigger |
| 22 | D24/PTB0 | I/O | Data bus / Port B | 126 | IOIS16/PTG7 | I | Write protect / Port G |
| 23 | D23/PTA7 | I/O | Data bus / Port A | 127 | PTG6 | I | Port G |
| 24 | D22/PTA6 | I/O | | 128 | PTG5 | I | |
| 25 | D21/PTA5 | I/O | | 129 | PTG4 | I | |
| 26 | D20/PTA4 | I/O | | 130 | PTG3 | I | |
| 27 | Vss | - | Ground | 131 | PTG2 | I | |
| 28 | D19/PTA3 | I/O | Data bus / Port A | 132 | VSS | - | Ground |
| 29 | Vcc | - | Power supply +3.3V | 133 | PTG1 | I | Port G |
| 30 | D18/PTA2 | I/O | Data bus / Port A | 134 | Vcc | - | Power supply +3.3V |
| 31 | D17/PTA1 | I/O | | 135 | PTG0 | I | Port G |
| 32 | D16/PTA0 | I/O | | 136 | PTF7/PINT15 | I | Port F / Port interruption |
| 33 | Vss | - | Ground | 137 | PTF6/PINT14 | I | |
| 34 | D15 | I/O | Data bus | 138 | PTF5/PINT13 | I | |
| 35 | Vcc | - | Power supply +3.3V | 139 | PTF4/PINT12 | I | |
| 36 | D14 | I/O | Data bus | 140 | PTF3/PINT11 | I | |
| 37 | D13 | I/O | | 141 | PTF2/PINT10 | I | |
| 38 | D12 | I/O | | 142 | PTF1/PINT9 | I | |
| 39 | D11 | I/O | | 143 | PTF0/PINT8 | I | |
| 40 | D10 | I/O | | 144 | MD0 | I | Mode control |
| 41 | D9 | I/O | | 145 | Vcc(PLL1) | - | Power supply +3.3V |
| 42 | D8 | I/O | | 146 | CAP1 | - | Capacitor |
| 43 | D7 | I/O | | 147 | Vss(PLL1) | - | Ground |
| 44 | D6 | I/O | | 148 | Vss(PLL2) | - | Ground |
| 45 | Vss | - | Ground | 149 | CAP2 | - | Capacitor |
| 46 | D5 | I/O | Data bus | 150 | VCC(PLL2) | - | Power supply +3.3V |
| 47 | Vcc | - | Power supply +3.3V | 151 | PTH6 | I | Port H |
| 48 | D4 | I/O | Data bus | 152 | Vss | - | Ground |
| 49 | D3 | I/O | | 153 | Vss | - | |
| 50 | D2 | I/O | | 154 | Vcc | - | Power supply +3.3V |
| 51 | D1 | I/O | | 155 | XTAL1 | O | Crystal oscillator |
| 52 | D0 | I/O | | 156 | EXTAL1 | I | |
| 53 | A0 | O | Address bus | 157 | STATUS0/PTJ6 | I/O | Processor status / Port J |
| 54 | A1 | O | | 158 | STATUS1/PTJ7 | I/O | |
| 55 | A2 | O | | 159 | TCLK/PTH7 | I/O | Timer clock / Port H |
| 56 | A3 | O | | 160 | /IRQOUT | O | Interrupt request output |
| 57 | Vss | - | Ground | 161 | Vss | - | Ground |
| 58 | A4 | O | Address bus | 162 | CKIO | I/O | System clock input / output |
| 59 | Vcc | - | Power supply +3.3V | 163 | Vcc | - | Power supply +3.3V |
| 60 | A5 | O | Address bus | 164 | TXD0/SCPT0 | O | Data transmission / SCI port |
| 61 | A6 | O | | 165 | SCK0/SCPT1 | I/O | Serial clock / SCI port |
| 62 | A7 | O | | 166 | TXD1/SCPT2 | O | Data transmission / SCI port |
| 63 | A8 | O | | 167 | SCK1/SCPT3 | I/O | Serial clock / SCI port |
| 64 | A9 | O | | 168 | TXD2/SCPT4 | O | Data transmission / SCI port |
| 65 | A10 | O | | 169 | SCK2/SCPT5 | I/O | Serial clock / SCI port |
| 66 | A11 | O | | 170 | RTS2/SCPT6 | I/O | Transmit request / SCI port |
| 67 | A12 | O | | 171 | RXD0/SCPT0 | I | Data reception / SCI port |
| 68 | A13 | O | | 172 | RXD1/SCPT2 | I | |
| 69 | Vss | - | Ground | 173 | Vss | - | Ground |
| 70 | A14 | O | Address bus | 174 | RXD2/SCPT4 | I | Data reception / SCI port |
| 71 | Vcc | - | Power supply +3.3V | 175 | Vcc | - | Power supply +3.3V |
| 72 | A15 | O | Address bus | 176 | CTS2//IRQ5/SCPT7 | I | Transmit request / Interrupt request / SCI port |
| 73 | A16 | O | | 177 | PTC7/PINT7 | I/O | Port C / Port interruption |
| 74 | A17 | O | | 178 | PTC6/PINT6 | I/O | |
| 75 | A18 | O | | 179 | PTC5/PINT5 | I/O | |
| 76 | A19 | O | | 180 | PTC4/PINT4 | I/O | |
| 77 | A20 | O | | 181 | Vss | - | Ground |
| 78 | A21 | O | | 182 | /WAKEUP/PTD3 | I/O | Standby mode Interrupt request output / port D |
| 79 | Vss | - | Ground | 183 | Vcc | - | Power supply +3.3V |
| 80 | A22 | O | Address bus | 184 | PTD2//RESETOUT | I/O | Port D / Reset output |
| 81 | Vcc | - | Power supply +3.3V | 185 | PTC3/PINT3 | I/O | Port C / Port interruption |
| 82 | A23 | O | Address bus | 186 | PTC2/PINT2 | I/O | |
| 83 | Vss | - | Ground | 187 | PTC1/PINT1 | I/O | |
| 84 | A24 | O | Address bus | 188 | PTC0/PINT0 | I/O | |
| 85 | Vcc | - | Power supply +3.3V | 189 | DRAK0/PTD1 | I/O | DMA acknowledge / Port D |
| 86 | A25 | O | Address bus | 190 | DRAK1/PTD0 | I/O | |
| 87 | /BS/PTK4 | I/O | Bus cycle / Port K | 191 | /DREQ0/PTD4 | I | DMA request / Port D |
| 88 | /RD | O | Read strobe | 192 | /DREQ1/PTD6 | I | |
| 89 | /WE0/DQMLL | O | | 193 | /RESETP | I | Power on reset |
| 90 | /WE1/DQMLU//WE | O | | 194 | /CA | I | Chip active |
| 91 | /WE2/DQMUL//ICRD/PTK6 | I/O | | 195 | MD3 | I | Mode control |
| 92 | /WE3/DQMUU//ICWR/PTK7 | I/O | | 196 | MD4 | I | |
| 93 | RD//WR | O | Read / Write | 197 | MD5 | I | |
| 94 | PTE7 | I/O | Port E | 198 | AVss | - | Analog ground |
| 95 | Vss | - | Ground | 199 | AN0/PTL0 | I | Analog input / Port L |
| 96 | /CS0 | O | Chip select | 200 | AN1/PTL1 | I | |
| 97 | Vcc | - | Power supply +3.3V | 201 | AN2/PTL2 | I | |
| 98 | /CS2/PTK0 | I/O | Chip select / Port K | 202 | AN3/PTL3 | I | |
| 99 | /CS3/PTK1 | I/O | | 203 | AN4/PTL4 | I | |
| 100 | /CS4/PTK2 | I/O | | 204 | AN5/PTL5 | I | |
| 101 | /CS5//CE1A/PTK3 | I/O | Chip select / Chip enable / Port K | 205 | AVcc | - | Analog power supply +3.3V |
| 102 | /CS6//CE1B | O | Chip select / Chip enable | 206 | AN6/DA1/PTL6 | I/O | Analog input / Analog output / Port L |
| 103 | /CE2A/PTE4 | I/O | Chip enable / Port E | 207 | AN7/DA0/PTL7 | I/O | |
| 104 | /CE2B/PTE5 | I/O | | 208 | AVss | - | Analog ground |

DM: IC036
SWX: IC001, 2

## ● **HG73C205AFD** (XU947C00) **SWX00B** (Tone Generator)

| PIN NO. | NAME | I/O | FUNCTION | PIN NO. | NAME | I/O | FUNCTION |
|---|---|---|---|---|---|---|---|
| 1 | ICN | I | Initial clear | 85 | CMA3 | O | Program address bus |
| 2 | RFCLKI | I | PLL Clock | 86 | CMA8 | O | Program address bus |
| 3 | TM2 | I | PLL Control | 87 | CMA2 | O | Program address bus |
| 4 | AVDD_PLL | | Power supply | 88 | CRD | O | read signal |
| 5 | AVSS_PLL | | Ground | 89 | CMA1 | O | Program address bus |
| 6 | MODE0 | I | SWX dual mode | 90 | CUB | O | high byte effective signal |
| 7 | VCC7 | | Power supply | 91 | VCC91 | | Power supply |
| 8 | GND8 | | Ground | 92 | GHND92 | | Ground |
| 9 | XIN | I | crystal oscillator | 93 | CS1 | O | CS signal |
| 10 | XOUT | O | crystal oscillator | 94 | CMA0 | O | Program address bus |
| 11 | MODE1 | I | SWX separate mode | 95 | CLB | O | low byte effective signal |
| 12 | TEST0 | I | TEST pin | 96 | CMA12 | O | Program address bus |
| 13 | TESTON | I | TEST pin | 97 | CMA11 | O | Program address bus |
| 14 | AN0-P40 | I | A/D converter | 98 | CMA10 | O | Program address bus |
| 15 | AN1-P41 | I | A/D converter | 99 | CMA9 | O | Program address bus |
| 16 | AN2-P42 | I | A/D converter | 100 | GND100 | | Ground |
| 17 | AN3-P43 | I | A/D converter | 101 | CWE | O | write signal |
| 18 | AVDD_AN | | Power supply | 102 | CMA16 | O | Program address bus |
| 19 | AVSS_AN | | Ground | 103 | CMA15 | O | Program address bus |
| 20 | TXD0 | O | for MIDI or TO-HOST | 104 | CMA14 | O | Program address bus |
| 21 | TXD1 | O | for MIDI | 105 | CMA13 | O | Program address bus |
| 22 | EXCLK | I | Crystal oscillator | 106 | CMD8 | I/O | Program memory Data bus |
| 23 | SMD11 | I/O | Wave memory data bus | 107 | CMD7 | I/O | Program memory Data bus |
| 24 | SMD4 | I/O | Wave memory data bus | 108 | CMD9 | I/O | Program memory Data bus |
| 25 | SMD3 | I/O | Wave memory data bus | 109 | CMD6 | I/O | Program memory Data bus |
| 26 | SMD12 | I/O | Wave memory data bus | 110 | CMD10 | I/O | Program memory Data bus |
| 27 | SMD10 | I/O | Wave memory data bus | 111 | CMD5 | I/O | Program memory Data bus |
| 28 | SMD5 | I/O | Wave memory data bus | 112 | CMD11 | I/O | Program memory Data bus |
| 29 | SMD2 | I/O | Wave memory data bus | 113 | CMD4 | I/O | Program memory Data bus |
| 30 | SMD13 | I/O | Wave memory data bus | 114 | CMD12 | I/O | Program memory Data bus |
| 31 | SMD9 | I/O | Wave memory data bus | 115 | CMD3 | I/O | Program memory Data bus |
| 32 | SMD6 | I/O | Wave memory data bus | 116 | CMD13 | I/O | Program memory Data bus |
| 33 | SMD1 | I/O | Wave memory data bus | 117 | CMD2 | I/O | Program memory Data bus |
| 34 | SMD14 | I/O | Wave memory data bus | 118 | CMD14 | I/O | Program memory Data bus |
| 35 | VCC35 | | Power supply | 119 | VCC119 | | Power supply |
| 36 | GND36 | | Ground | 120 | GND115 | | Ground |
| 37 | SMD8 | I/O | Wave memory data bus | 121 | CMD1 | I/O | Program memory Data bus |
| 38 | SMD7 | I/O | Wave memory data bus | 122 | CMD15 | I/O | Program memory Data bus |
| 39 | SMD0 | I/O | Wave memory data bus | 123 | CMD0 | I/O | Program memory Data bus |
| 40 | SMD15 | I/O | Wave memory data bus | 124 | CMA21 | O | Program address bus |
| 41 | SOE | O | read signal | 125 | PDT15 | I/O | SWX access data bus |
| 42 | SWE | O | write signal | 126 | PDT14 | I/O | SWX access data bus |
| 43 | SRAS | O | RAS signal | 127 | PDT13 | I/O | SWX access data bus |
| 44 | SCAS | O | CAS signal | 128 | PDT12 | I/O | SWX access data bus |
| 45 | REFRESH | O | REFRESH signal | 129 | PDT11 | I/O | SWX access data bus |
| 46 | CS0 | O | CS signal | 130 | PDT10 | I/O | SWX access data bus |
| 47 | SMA0 | O | Memory address bus | 131 | PDT9 | I/O | SWX access data bus |
| 48 | SMA16 | O | Memory address bus | 132 | PDT8 | I/O | SWX access data bus |
| 49 | VCC49 | | Power supply | 133 | VCC133 | | Power supply |
| 50 | GND50 | | Ground | 134 | GND134 | | Ground |
| 51 | SMA1 | O | Memory address bus | 135 | PDT7 | I/O | SWX access data bus |
| 52 | SMA15 | O | Memory address bus | 136 | PDT6 | I/O | SWX access data bus |
| 53 | SMA2 | O | Memory address bus | 137 | PDT5 | I/O | SWX access data bus |
| 54 | SMA14 | O | Memory address bus | 138 | PDT4 | I/O | SWX access data bus |
| 55 | SMA3 | O | Memory address bus | 139 | PDT3 | I/O | SWX access data bus |
| 56 | SMA13 | O | Memory address bus | 140 | PDT2 | I/O | SWX access data bus |
| 57 | SMA4 | O | Memory address bus | 141 | PDT1 | I/O | SWX access data bus |
| 58 | SMA12 | O | Memory address bus | 142 | PDT0 | I/O | SWX access data bus |
| 59 | SMA5 | O | Memory address bus | 143 | VCA143 | | Power supply |
| 60 | GND60 | | Ground | 144 | GND144 | | Ground |
| 61 | VCC61 | | Power supply | 145 | PAD2 | I | SWX access address bus |
| 62 | SMA11 | O | Memory address bus | 146 | PAD1 | I | SWX access address bus |
| 63 | SMA6 | O | Memory address bus | 147 | PAD0 | I | SWX access address bus |
| 64 | SMA10 | O | Memory address bus | 148 | VCC148 | | Power supply |
| 65 | SMA7 | O | Memory address bus | 149 | GND149 | | Ground |
| 66 | SMA9 | O | Memory address bus | 150 | PCS | I | Chip select |
| 67 | SMA17 | O | Memory address bus | 151 | PWR | I | write enable |
| 68 | SMA8 | O | Memory address bus | 152 | PRD | I | read enable |
| 69 | SMA18 | O | Memory address bus | 153 | RXD0 | I | for Midi or TO-HOST |
| 70 | SMA19 | O | Memory address bus | 154 | RXD1 | I | for Midi or Key scan |
| 71 | SMA20 | O | Memory address bus | 155 | SCLKI | I | EXT Clock |
| 72 | SMA21 | O | Memory address bus | 156 | ADIN | I | A/D converter |
| 73 | SMA22 | O | Memory address bus | 157 | ADLR | O | A/D converter LR clock |
| 74 | SMA23 | O | Memory address bus | 158 | DO0 | O | DAC |
| 75 | CMA20 | O | Program address bus | 159 | DO1 | O | DAC |
| 76 | CMA19 | O | Program address bus | 160 | SYSCLK | O | 1/2 clock |
| 77 | VCC77 | | Power supply | 161 | VCC161 | | Power supply |
| 78 | GND78 | O | Ground | 162 | GND162 | | Ground |
| 79 | CMA18 | O | Program address bus | 163 | WCLK | O | for DAC LR clock |
| 80 | CMA17 | O | Program address bus | 164 | QCLK | O | 1/12 clock |
| 81 | CMA5 | O | Program address bus | 165 | BCLK | O | IIS-DAC clock |
| 82 | CMA6 | O | Program address bus | 166 | SYI | I | Synch signal |
| 83 | CMA4 | O | Program address bus | 167 | IRQ0 | I | Interrupt request |
| 84 | CMA7 | O | Program address bus | 168 | NMI | I | Interrupt request |

## ● **JG760082A** (XV481B00) **Gate Array** (Video Out)

DM: IC019

| PIN NO. | NAME | I/O | FUNCTION | PIN NO. | NAME | I/O | FUNCTION |
|---|---|---|---|---|---|---|---|
| 1 | RESET | I | Reset (High/Low) | 33 | RD | O | Read strobe (High/Low) |
| 2 | TEST | I | Test mode setting (High/Low) | 34 | WR | O | Write strobe (High/Low) |
| 3 | MODE | I | Mode select (High/Low) | 35 | GND | - | Ground (Out buffer) |
| 4 | NTSC/PAL | I | NTSC/PAL signal input (High/Low) | 36 | A0 | O | |
| 5 | YD | I | Frame | 37 | A1 | O | |
| 6 | LP | I | Line latch pulse | 38 | A2 | O | |
| 7 | 5V | - | Power supply (5 v) | 39 | A3 | O | |
| 8 | XSCL | I | 4 Dot latch clock | 40 | A4 | O | |
| 9 | GND | - | Ground (In buffer) | 41 | A5 | O | |
| 10 | XD0 | I | | 42 | A6 | O | Address bus |
| 11 | XD1 | I | | 43 | A7 | O | |
| 12 | XD2 | I | Dot data | 44 | A8 | O | |
| 13 | XD3 | I | | 45 | A9 | O | |
| 14 | GND | - | Ground | 46 | A10 | O | |
| 15 | 5V | - | Power supply (In buffer 5 V) | 47 | A11 | O | |
| 16 | 5V | - | Power supply (Out buffer 5 V) | 48 | A12 | O | |
| 17 | LCD_CLK | O | LCD clock output (9 MHz) | 49 | 5V | - | Power supply (Out buffer 5 V) |
| 18 | GND | - | Ground (Out buffer) | 50 | A13 | O | |
| 19 | XA0 | I | OSC_NTSC signal input | 51 | A14 | O | Address bus |
| 20 | XA1 | O | OSC_NTSC signal output | 52 | A15 | O | |
| 21 | XB0 | I | OSC_PAL signal input | 53 | A16 | O | |
| 22 | XB1 | O | OSC_PAL signal output | 54 | SYNCOUT | O | Sync. signal output |
| 23 | GND | - | Ground (In buffer) | 55 | GND | - | Ground (Out buffer) |
| 24 | D0 | I/O | | 56 | SC_NTSC | O | SC_NTSC signal output |
| 25 | D1 | I/O | | 57 | SC_PAL | O | SC_PAL signal output |
| 26 | D2 | I/O | | 58 | GND | - | Ground (Out buffer) |
| 27 | D3 | I/O | Data bus | 59 | BOUT1 | O | |
| 28 | D4 | I/O | | 60 | BOUT0 | O | |
| 29 | D5 | I/O | | 61 | GOUT1 | O | Color data |
| 30 | D6 | I/O | | 62 | GOUT0 | O | |
| 31 | D7 | I/O | | 63 | ROUT1 | O | |
| 32 | GND | - | Ground | 64 | ROUT0 | O | |

## ● **MBCG46183-129PFV-G** (XV833A00) **SIO4** (Gate Array)

DM: IC026

| PIN NO. | NAME | I/O | FUNCTION | PIN NO. | NAME | I/O | FUNCTION |
|---|---|---|---|---|---|---|---|
| 1 | D5 | I/O | | 25 | TX31 | O | Transmit Data 31 |
| 2 | D6 | I/O | Data Bus | 26 | RX32 | I | Receive Data 32 |
| 3 | D7 | I/O | | 27 | TX32 | O | Transmit Data 32 |
| 4 | /IRQ0 | I/O | Interrupt Request Port 0 | 28 | RX33 | I | Receive Data 33 |
| 5 | /IRQ1 | I/O | Interrupt Request Port 1 | 29 | TX33 | I/O | Transmit Data 33 |
| 6 | Vss | | Ground | 30 | /IC | I | Initial Clear |
| 7 | /IRQ2 | I/O | Interrupt Request Port 2 | 31 | Vss | | Ground |
| 8 | IRQ3 | I/O | Interrupt Request Port 3 | 32 | XI | I | Quartz Crystal Input |
| 9 | /RD | I | Read Signal Input | 33 | Vss | | Ground |
| 10 | /WR | I | Write Signal Input | 34 | XO | I/O | Quartz Crystal Onput |
| 11 | /CE | I | Chip Enable Input | 35 | A0 | I | |
| 12 | /ASTB | I | Address Strobe (Not used: to ground) | 36 | A1 | I | |
| 13 | TESTSIO | I | Input with Pull-down Resistor (50 k) | 37 | A2 | I | |
| 14 | RX0 | I | Receive Data 0 | 38 | A3 | I | Address Bus |
| 15 | TX0 | O | Transmit Data 0 | 39 | A4 | I | |
| 16 | RX1 | I | Receive Data 1 | 40 | A5 | I | |
| 17 | TX1 | O | Transmit Data 1 | 41 | CPUCLK | I | CPU Clock |
| 18 | Vss | | Ground | 42 | Vss | | Ground |
| 19 | Vdd | | Power Supply | 43 | Vdd | | Power Supply |
| 20 | RX2 | I | Receive Data 2 | 44 | D0 | I/O | |
| 21 | TX2/BO2 | O | Transmit Data 2 | 45 | D1 | I/O | |
| 22 | RX30 | I | Receive Data 30 | 46 | D2 | I/O | Data Bus |
| 23 | TX30 | O | Transmit Data 30 | 47 | D3 | I/O | |
| 24 | TX31 | I | Receive Data 31 | 48 | D4 | I/O | |

## ● **HD63266F** (XI939A00) **FDC** (Floppy Disk Controller)

DM: IC009

| PIN NO. | NAME | I/O | FUNCTION | PIN NO. | NAME | I/O | FUNCTION |
|---|---|---|---|---|---|---|---|
| 1 | 8"//5" | I | Data transmission speed | 33 | /TRKO | I | Track 00 signal |
| 2 | XTALSET | I | Clock select | 34 | /INDEX | I | Index signal |
| 3 | /RESET | I | Rest | 35 | /RDATA | I | Read data input from FDD |
| 4 | E//RD | I | Enable/Read | 36 | XTAL2 | | Clock |
| 5 | RW//WR | I | Read/write/Write | 37 | EXTAL2 | | |
| 6 | /CS | I | Chip select | 38 | NC | | |
| 7 | /DACK | I | DMA acknowledge | 39 | XTAL1 | | Clock |
| 8 | RS0 | I | Register select | 40 | EXTAL1 | | |
| 9 | RS1 | I | | 41 | VSS4 | | Ground |
| 10 | VSS1 | | Ground | 42 | VSS5 | | |
| 11 | VSS2 | | | 43 | NC | | |
| 12 | D0 | I/O | Data bus | 44 | VCC2 | | Power supply |
| 13 | D1 | I/O | | 45 | VCC3 | | |
| 14 | D2 | I/O | | 46 | VCC4 | | |
| 15 | D3 | I/O | | 47 | /WGATE | O | Write control |
| 16 | D4 | I/O | | 48 | /WDATA | O | Writ data to FDD |
| 17 | D5 | I/O | | 49 | VSS6 | | Ground |
| 18 | D6 | I/O | | 50 | /STEP | O | Step signal to control head of FDD |
| 19 | D7 | I/O | | 51 | /HDIR | O | Direction |
| 20 | /DREQ | O | DMA request | 52 | /HLOAD | O | Head load |
| 21 | /IRQ | O | Interrupt request | 53 | /HSEL | O | Head select |
| 22 | /DEND | I | Data end | 54 | VSS7 | | Ground |
| 23 | VSS3 | | Ground | 55 | /DS0 | O | Drive select |
| 24 | 1/2 EX1 | | | 56 | /DS1 | O | |
| 25 | VCC1 | | Power supply | 57 | /DS2 | O | |
| 26 | NUM1 | I | | 58 | /DS3 | O | |
| 27 | NUM3 | I | | 59 | VSS8 | | Ground |
| 28 | IFS | I | Host interface select | 60 | /MON0 | O | Motor on |
| 29 | SFORM | I | Format data | 61 | /MON1 | O | |
| 30 | /INP | I | Index pulse | 62 | /MON2 | O | |
| 31 | /READY | I | Ready from FDD | 63 | /MON3 | O | |
| 32 | /WPRT | I | Write control signal | 64 | VSS9 | | Ground |

## ● **YMZ702-D** (XR632A00) **KSN2** (Key Scanner)

GH-D SW L: IC KSN2

| PIN NO. | NAME | I/O | FUNCTION | PIN NO. | NAME | I/O | FUNCTION |
|---|---|---|---|---|---|---|---|
| 1 | BK5 | O | Key block (open drein) | 21 | GND | | Ground |
| 2 | BK4 | O | | 22 | VDD | | Power supply |
| 3 | BK3 | O | | 23 | SO | O | Serial data |
| 4 | BK2 | O | | 24 | ACK | I | Acknowledge/mode select |
| 5 | BK1 | O | | 25 | XCK | I | Clock for serial data |
| 6 | BK0 | O | | 26 | /IC | I | Initial clear |
| 7 | MK15 | I | First make contact | 27 | TST1 | I | Test mode |
| 8 | MK14 | I | | 28 | TST2 | I | (L,L: normal mode, others: test) |
| 9 | MK13 | I | | 29 | XCKINH | I | Inhibit of serial clock |
| 10 | MK12 | I | | 30 | BK14 | O | Key block (open drein) |
| 11 | MK11 | I | | 31 | BK13 | O | |
| 12 | MK10 | I | | 32 | BK12 | O | |
| 13 | MK05 | I | Second make contact | 33 | BK11 | O | |
| 14 | MK04 | I | | 34 | BK10 | O | |
| 15 | MK03 | I | | 35 | BK9 | O | |
| 16 | MK02 | I | | 36 | BK8 | O | |
| 17 | MK01 | I | | 37 | BK7 | O | |
| 18 | MK00 | I | | 38 | BK6 | O | |
| 19 | XIN | I | Crystal osc. input (4 MHz) | 39 | GND | | Ground |
| 20 | XOUT | O | Crystal osc. output (4 MHz) | 40 | VDD | | Power supply |

## ● **S1D13305F00B100** (XQ595A00) **LCDC** (LCD Controller)

DM: IC008

| PIN NO. | NAME | I/O | FUNCTION | PIN NO. | NAME | I/O | FUNCTION |
|---|---|---|---|---|---|---|---|
| 1 | VA5 | O | VRAM address bus | 31 | XD2 | O | Data bus output for 4 bit dot |
| 2 | VA4 | O | | 32 | XD1 | O | |
| 3 | VA3 | O | | 33 | XD0 | O | |
| 4 | VA2 | O | | 34 | XECL | O | S driver enable, chain clock |
| 5 | VA1 | O | | 35 | XSCL | O | Data bus shift clock |
| 6 | VA0 | O | | 36 | Vss | - | Ground |
| 7 | /VWR | O | VRAM read/write | 37 | LP | O | X driver latch pulse |
| 8 | /VCE | O | Memory control | 38 | WF | O | Frame signal for X/Y driver |
| 9 | /VRD | - | Not used | 39 | YDIS | O | Power down signal for displaying off mode |
| 10 | /RES | I | Initial clear | 40 | YD | O | Scan start signal |
| 11 | NC | - | Not used | 41 | YSCL | O | Scan shift clock |
| 12 | NC | - | Not used | 42 | VD7 | I/O | VRAM data bus |
| 13 | /RD | I | Read strobe | 43 | VD6 | I/O | |
| 14 | /WR | I | Write strobe | 44 | VD5 | I/O | |
| 15 | SEL2 | I | Bus select | 45 | VD4 | I/O | |
| 16 | SEL1 | I | Bus select | 46 | VD3 | I/O | |
| 17 | OSC1 | I | Clock | 47 | VD2 | I/O | |
| 18 | OSC2 | O | Clock | 48 | VD1 | I/O | |
| 19 | /CS | I | Chip select | 49 | VD0 | I/O | |
| 20 | A0 | I | Data mode select | 50 | VA15 | O | VRAM address bus |
| 21 | Vdd | - | Power supply | 51 | VA14 | O | |
| 22 | D0 | I/O | Data bus | 52 | VA13 | O | |
| 23 | D1 | I/O | | 53 | VA12 | O | |
| 24 | D2 | I/O | | 54 | VA11 | O | |
| 25 | D3 | I/O | | 55 | VA10 | O | |
| 26 | D4 | I/O | | 56 | VA9 | O | |
| 27 | D5 | I/O | | 57 | VA8 | O | |
| 28 | D6 | I/O | | 58 | VA7 | O | |
| 29 | D7 | I/O | | 59 | VA6 | O | |
| 30 | XD3 | O | Data bus output for 4 bit dot | 60 | NC | - | Not used |

## ● **AD1854JRSRL** (XY782A00) **DAC** (Digital to Analog Converter)

DM: IC027

| PIN NO. | NAME | I/O | FUNCTION | PIN NO. | NAME | I/O | FUNCTION |
|---|---|---|---|---|---|---|---|
| 1 | DGND | I | Digital Ground | 15 | AGND | I | Analog Ground |
| 2 | MCLK | I | Master Clock Input. Connect to an external clock source at either 256, 384 or 512 Fs. | 16 | OUTL- | O | Left Channel Negative line level analog output. |
| 3 | CLATCH | I | Latch input for control data. This input is rising-edge sensitive. | 17 | OUTL+ | O | Left Channel Positive line level analog output. |
| 4 | CCLK | I | Control clock input for control data. Control input data must be valid on the rising edge of CCLK. CCLK may be continuous or gated. | 18 | AVDD | I | Analog Power Supply. Connect to analog 5 V supply. |
| | | | | 19 | FILTB | O | Filter Capacitor connection, connect 10 µF capacitor to AGND. |
| 5 | CDATA | I | Serial control input, MSB first, containing 16 bits of unsigned data per channel. Used for specifying channel-specific attenuation and mute. | 20 | IDPM1 | I | Input serial data port mode control one. With IDPM0, defines one of four serial modes. |
| 6 | 384//256 | I | Selects the master clock mode as either 384 times the intended sample frequency (HI) or 256 times the intended sample frequency (LO). The state of this input should be hardwired to logic HI or logic LO, or may be changed while the AD1854 is in power-down/reset. It must not be changed while the AD1854 is operational. | 21 | IDPM0 | I | Input serial data port mode control zero. With IDPM1, defines one of four serial modes. |
| | | | | 22 | ZEROL | O | Left Channel Zero Flag Output. This pin goes HI when Left Channel has no signal input for more than 1024 LR Clock Cycles. |
| 7 | X2MCLK | I | Selects internal clock doubler (LO) or internal clock = MCLK (HI). | 23 | MUTE | I | Mute. Assert HI to mute both stereo analog outputs. Deassert LO for normal operation. |
| 8 | ZEROR | O | Right Channel Zero Flag Output. This pin goes HI when Right Channel has no signal input for more than 1024 LR Clock Cycles. | 24 | /PD//RST | I | /Power-Down//Reset. The AD1854 is placed in a low power consumption mode when this pin is held LO. The AD1854 is reset on the rising edge of this signal. The serial control port registers are reset to the default values. Connect HI for normal operation. |
| 9 | DEEMP | I | De-Emphasis. Digital de-emphasis is enabled when this input signal is HI. This is used to impose a 50 µs/15 µs response characteristic on the output audio spectrum at an assumed 44.1 kHz sample rate. | 25 | L//RCLK | I | Left//Right clock input for input data. Must run continuously. |
| 10 | 96//48 | I | Selects 48 kHz (LO) or 96 kHz Sample Frequency Control. | 26 | BCLK | I | Bit clock input for input data. Need not run continuously; may be gated or used in a burst fashion. |
| 11 | AGND | I | Analog Ground | | | | |
| 12 | OUTR+ | O | Right Channel Positive line level analog output. | | | | |
| 13 | OUTR- | O | Right Channel Negative line level analog output. | 27 | SDATA | I | Serial input, MSB first, containing two channels of 16, 18, 20, and 24 bits of twos complement data per channel. |
| 14 | FILTR | O | Voltage Reference Filter Capacitor Connection. Bypass and decouple the voltage reference with parallel 10 µF and 0.1 µF capacitors to the AGND. | 28 | DVDD | I | Digital Power Supply Connect to digital 5 V supply. |

## ● **M38K07M4L-300FP** (X3646100) **CPU** (USB)

DJK: IC100

| PIN NO. | NAME | I/O | FUNCTION | PIN NO. | NAME | I/O | FUNCTION |
|---|---|---|---|---|---|---|---|
| 1 | $P1_2/DQ_2/AN_2$ | I/O | Port P1 (In/output) | 33 | $P2_6$ | I/O | Port P2 (In/output) |
| 2 | $P1_3/DQ_3/AN_3$ | I/O | | 34 | $P2_7$ | I/O | |
| 3 | $P1_4/DQ_4/AN_4$ | I/O | | 35 | $P5_0/INT_0$ | I/O | Port P5 (In/output)/Interruption input |
| 4 | $P1_5/DQ_5/AN_5$ | I/O | | 36 | $P5_1/CNTR_0$ | I/O | Port P5 (In/output)/ |
| 5 | $P1_6/DQ_6/AN_6$ | I/O | | 37 | $P5_2/INT_1$ | I/O | Port P5 (In/output)/Interrupution input |
| 6 | $P1_7/DQ_7/AN_7$ | I/O | | 38 | $P5_3$ | I/O | Port P5 (In/output) |
| 7 | CNVss | I | Chip active | 39 | $P5_4$ | I/O | |
| 8 | $\overline{\text{RESET}}$ | I | System reset input | 40 | $P5_5$ | I/O | |
| 9 | VccE | - | Analog power supply | 41 | $P5_6$ | I/O | |
| 10 | $V_{REF}$ | I | Reference voltage input | 42 | $P5_7$ | I/O | |
| 11 | Vss | - | Ground | 43 | $P0_0$ | I/O | Port P0 (In/output) |
| 12 | $X_{IN}$ | I | Clock input | 44 | $P0_1$ | I/O | |
| 13 | $X_{OUT}$ | O | Clock output | 45 | $P0_2$ | I/O | |
| 14 | Vcc | - | Power supply | 46 | $P0_3$ | I/O | |
| 15 | CNVss2 | I | Chip active | 47 | $P0_4$ | I/O | |
| 16 | $P6_0(LED_0)$ | I/O | Port P6 (In/output) | 48 | $P0_5$ | I/O | |
| 17 | $P6_1(LED_1)$ | I/O | | 49 | $P0_6$ | I/O | |
| 18 | $P6_2(LED_2)$ | I/O | | 50 | $P0_7$ | I/O | |
| 19 | $P6_3(LED_3)$ | I/O | | 51 | $P4_0$/ExDREQ/RxD | I/O | Port P4 (In/output)/Serial I/O/External bus interface |
| 20 | PVss | - | Analog power supply | 52 | $P4_1$/ExDACK/TxD | I/O | |
| 21 | PVcc | - | Analog power supply | 53 | $P4_2$/ExTC/$S_{CLK}$ | I/O | |
| 22 | DVcc | - | Analog power supply | 54 | $P4_3$/ExA1/$\overline{S_{RDY}}$ | I/O | |
| 23 | $USBV_{REF}$ | - | USB reference power supply | 55 | $P3_0$ | I/O | Port P3 (In/output) |
| 24 | TrON | O | USB reference voltage output | 56 | $P3_1$ | I/O | |
| 25 | D0+ | I/O | USB upstream in/output | 57 | $P3_2$ | I/O | |
| 26 | D0- | I/O | | 58 | $P3_3$/ExINT | I/O | Port P3 (In/output)/External bus interface |
| 27 | $P2_0$ | I/O | Port P2 (In/output) | 59 | $P3_4$/ExCS | I/O | |
| 28 | $P2_1$ | I/O | | 60 | $P3_5$/ExWR | I/O | |
| 29 | $P2_2$ | I/O | | 61 | $P3_6$/ExRD | I/O | |
| 30 | $P2_3$ | I/O | | 62 | $P3_7$/ExA0 | I/O | |
| 31 | $P2_4$ | I/O | | 63 | $P1_0/DQ_0/AN_0$ | I/O | Port P1 (In/output) |
| 32 | $P2_5$ | I/O | | 64 | $P1_1/DQ_1/AN_1$ | I/O | |

# ■ IC BLOCK DIAGRAM（IC ブロック図）

● **HD74LV08AFPEL** (IS000800)
Quad 2 Input AND
DM: IC002

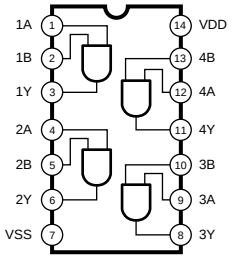


● **SN74HC132NSR** (XW792A00)
**MM74HC132SJX** (XY352A00)
Quad 2 Input NAND
DM: IC028,045

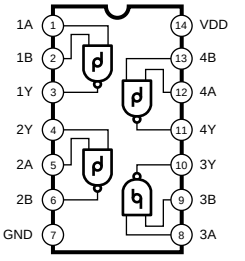


● **HD74LVC139FPEL** (XS048A00)
Dual 2 to 4 Demultiplexer
DM: IC021

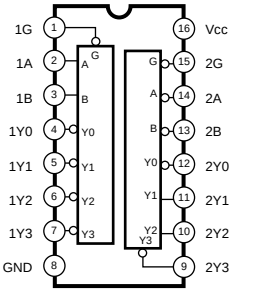


● **SN74HC157NSR** (XW110A00)
Quad 2 to 1 Multiplexer
DJK: IC080

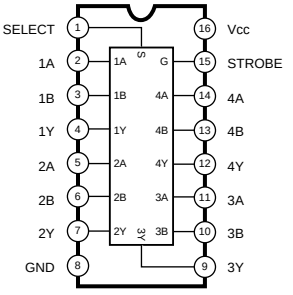


● **TC74VHCT245AFT** (XT744A00)
**74LVC245APW** (XZ286A00)
Octal 3-State Bus Transceiver
DM: IC001
IC011, 012

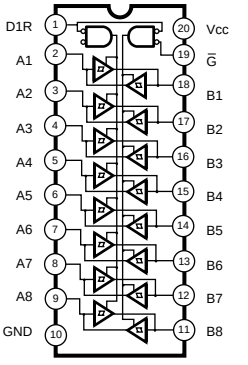


● **SN74AHCT1G08DCKR** (X0158A00)
**SN74AHC1G08DCKR** (X3833A00)
Single 2-Input Positive-AND Gate
DM: IC004, 039, 046
IC013

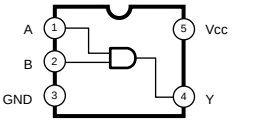


FUNCTION TABLE

| INPUTS | | OUTPUT |
|---|---|---|
| A | B | Y |
| H | H | H |
| L | X | L |
| X | L | L |

● **TC4069UBF-EL** (XE054A00)
Hex Inverter
DM: IC007

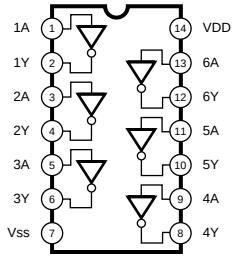


● **TC7SH04FU** (XS775A00)
Inverter Gate
SWX: IC009

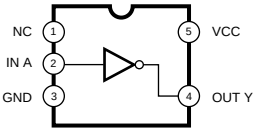


● **M5229FP** (XY487A00)
7 Band Graphic Equalizer
A-JACK: IC300, 400

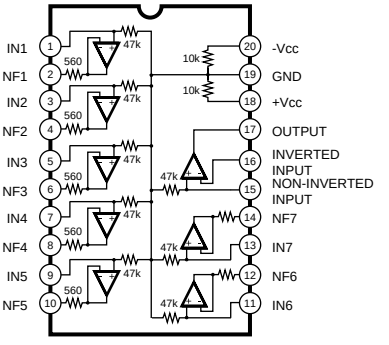

● **M5233FP-600D** (X0506A00)
Comparator
DM: IC044

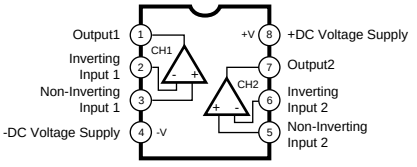


● **µPC4570G2** (XF291A00)
Dual Operational Amplifier
DM: IC031, 032
A-JACK: IC100
MIC: IC100

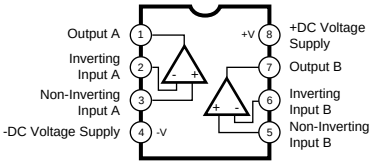


● **LA6517M-TE-R** (XT131A00)
Dual Power Operational Amplifier
A-JACK: IC200

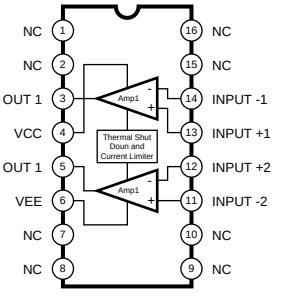


● **CXA1645M-T6** (XN431A00)
RGB Encorder
DM: IC014

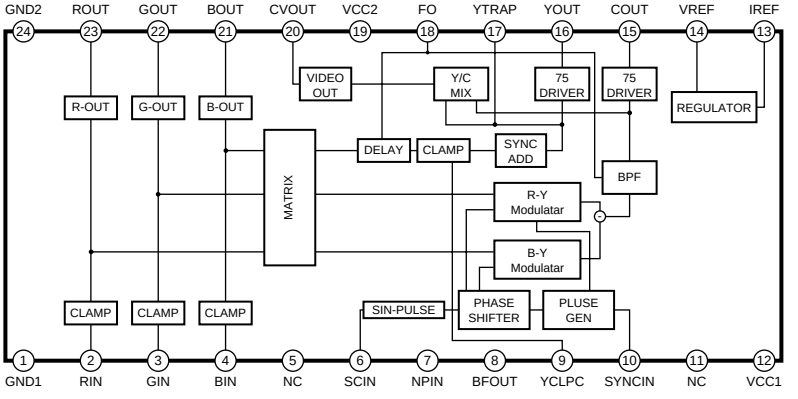


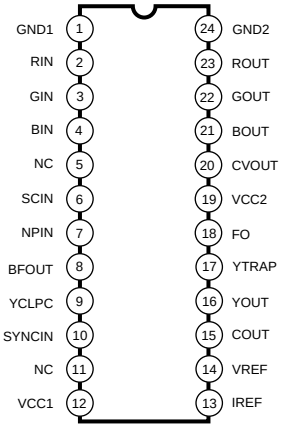


## ■ CIRCUIT BOARDS CONTENTS（シート基板図目次）

**A-JACK** (XZ888B0) . . . . . 44
**DJK** (X3632C0) . . . . . 45
**DM** (X3789B0) . . . . . 34/35
**FU60** (XQ395A0) . . . . . 42
**GLC** (XZ883C0) . . . . . 46
**GLL** (XZ883C0) . . . . . 47
**GLR** (XZ883C0) . . . . . 48
**HP** (XQ795A0) . . . . . 45
**INV** (XZ881C0) . . . . . 36
**MA60** (XQ393E0) . . . . . 50
**MIC** (XV507D0) . . . . . 43
**MV** (XZ881C0) . . . . . 51
**NET1** (XT123B0) . . . . . 50
**PEDAL (DJK)** (X3632C0) . . . . . 45
**PEDAL (SW)** (XR780B0) . . . . . 51
**PEDAL VR** (XR780B0) . . . . . 51
**PNCB** (XZ881C0) . . . . . 40
**PNCL** (X0080C0) . . . . . 42
**PNCR** (X0080C0) . . . . . 43
**PNL** (XZ881C0) . . . . . 40
**PNR (ENC)** (XZ882E0) . . . . . 36/39
**PNR (PNR)** (XZ882E0) . . . . . 36/38
**SWX** (XZ895D0) . . . . . 49

**Note :** See parts list for details of circuit board conponent parts.
**注：シートの部品詳細は、パーツリストをご参照ください。**

# ■ CIRCUIT BOARDS（シート基板図）

● DM Circuit Board

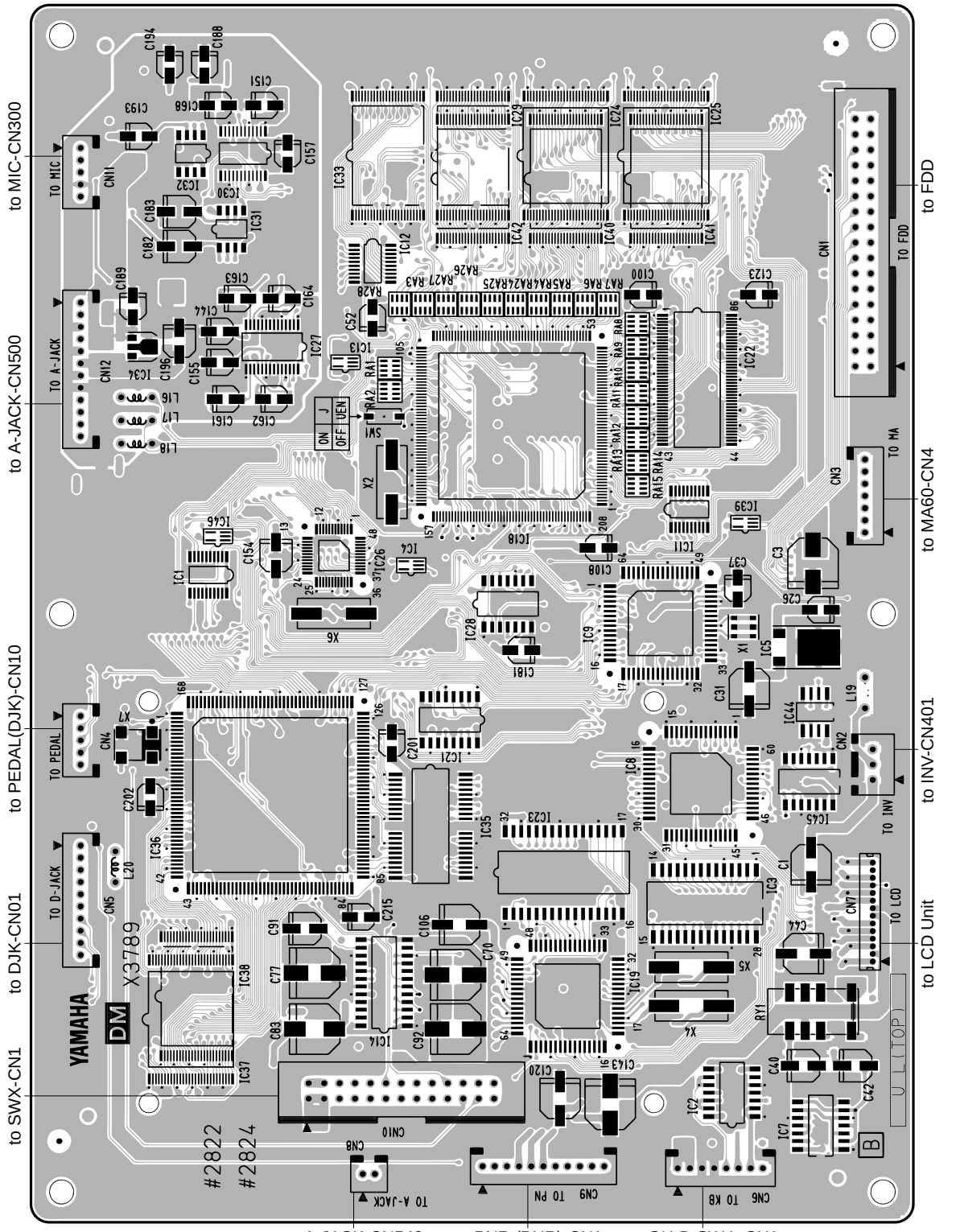


2NA-WA45470-1 1

● DM Circuit Board

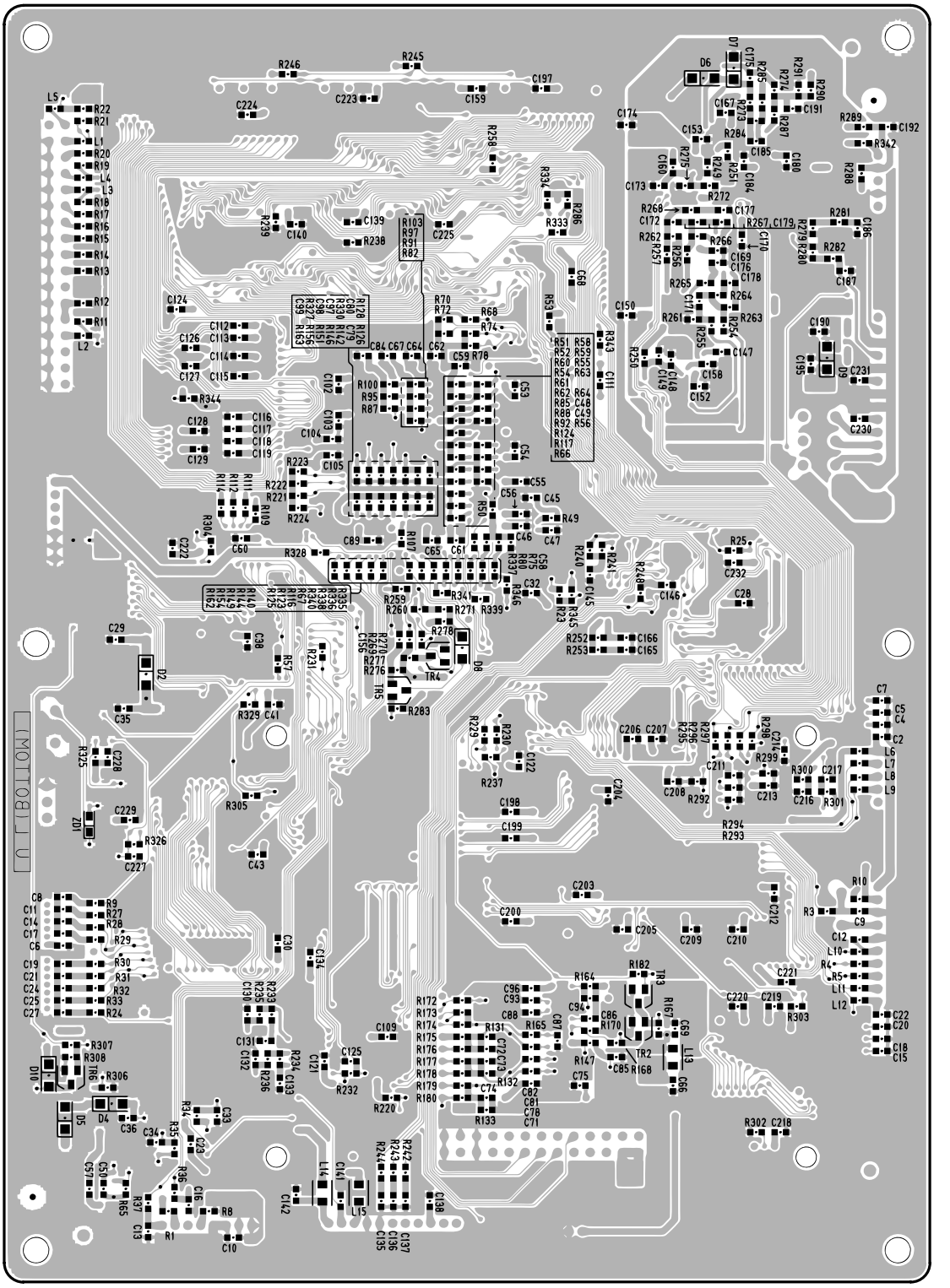

**Pattern side**
**(パターン側)**

● PNR (PNR) Circuit Board

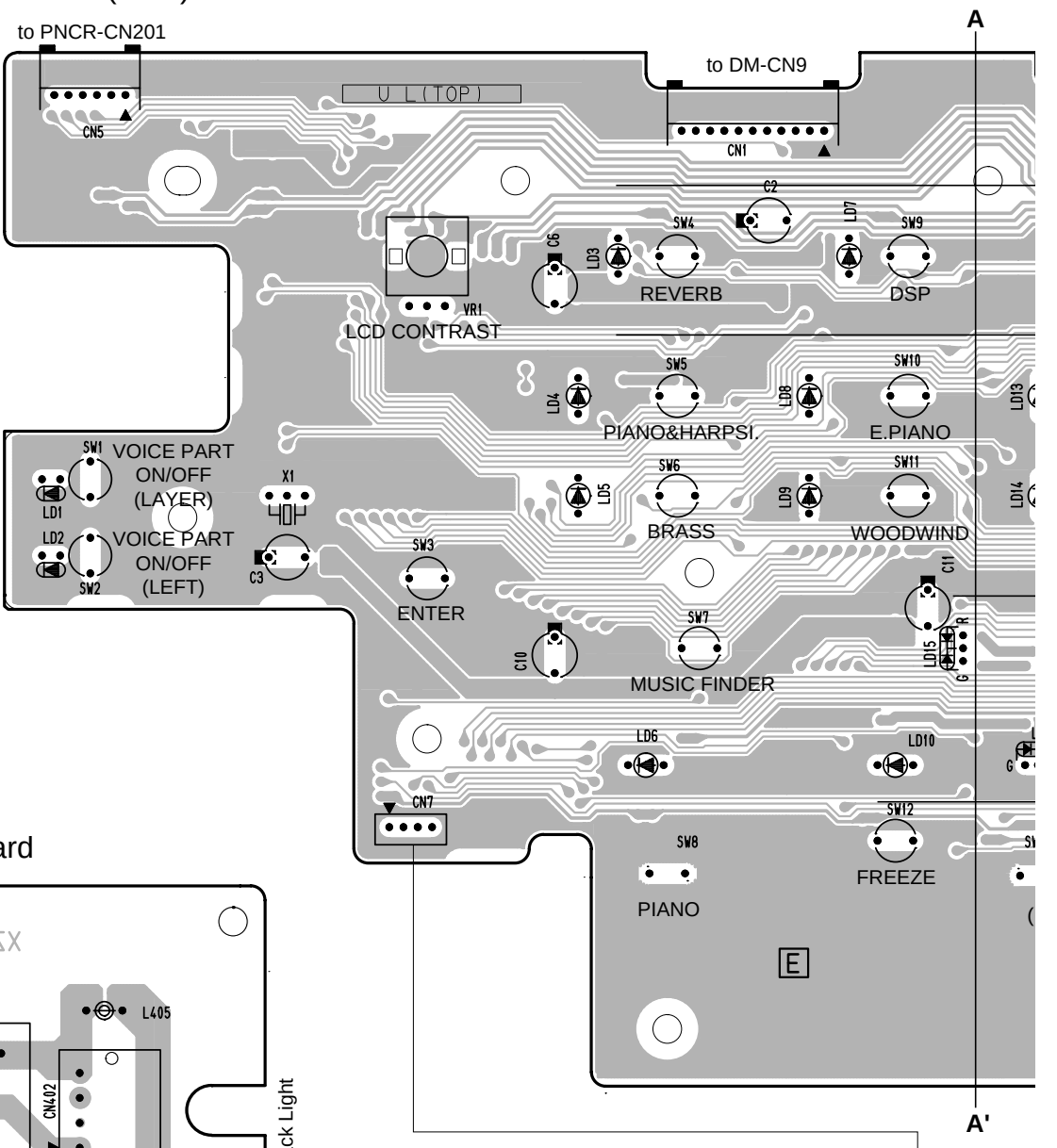


● INV Circuit Board

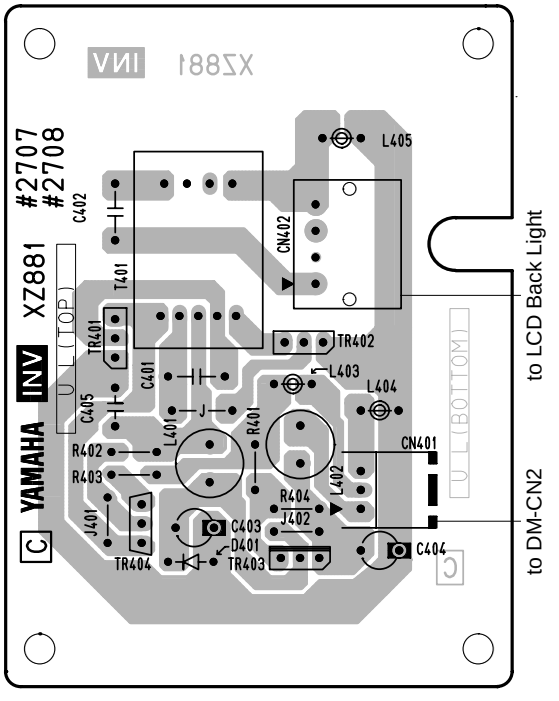


Component side
（部品側）

● PNR (ENC) Circuit Board

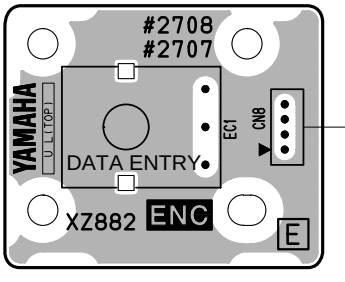


Component side
（部品側）

PNR, ENC: 2NA-V713520-1 △3
INV : 2NA-V713450 △3

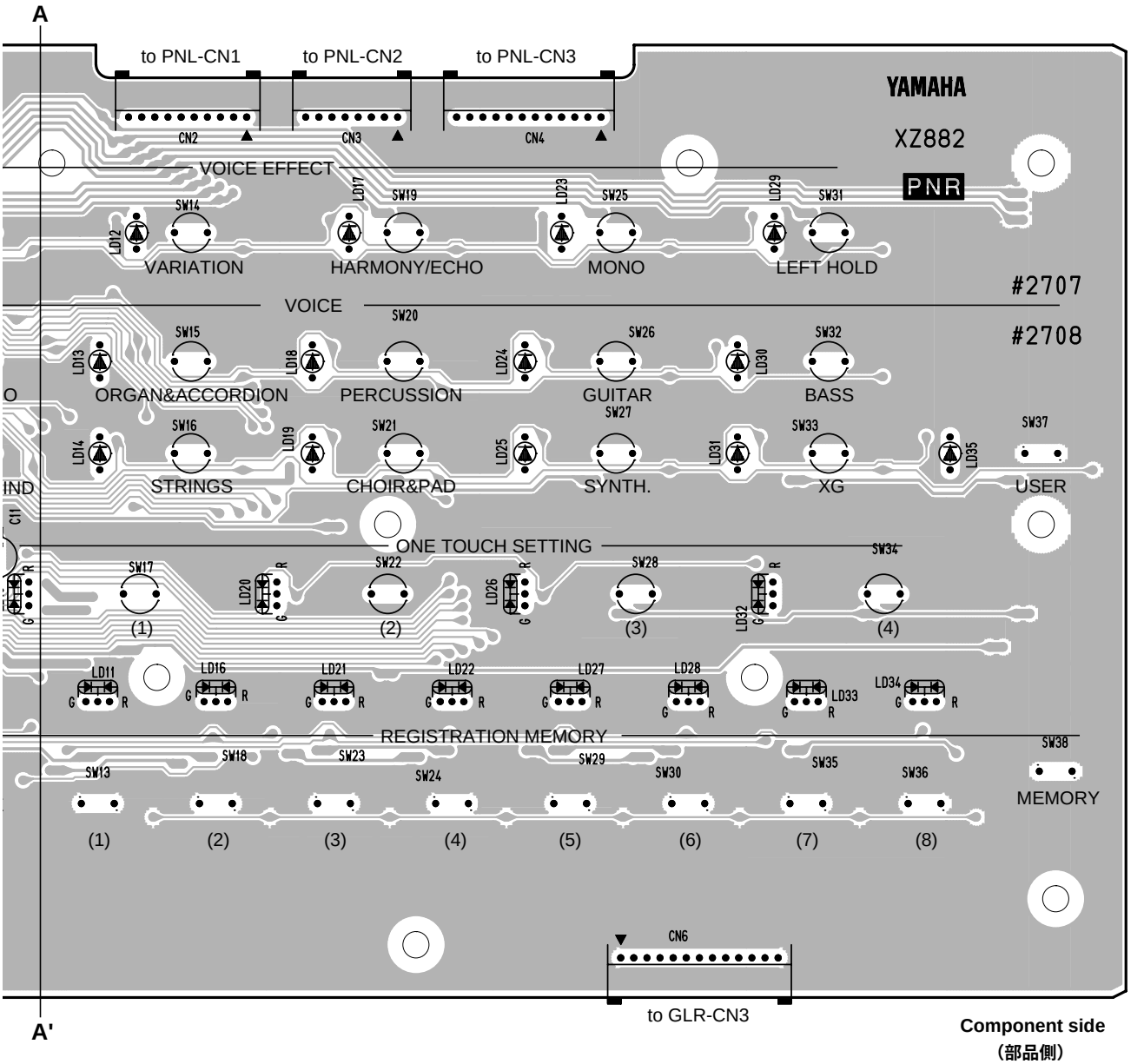
A
A'
to PNL-CN1
to PNL-CN2
to PNL-CN3
CN2
CN3
CN4
YAMAHA
XZ882
PNR
#2707
#2708
VOICE EFFECT
VARIATION
HARMONY/ECHO
MONO
LEFT HOLD
VOICE
ORGAN&ACCORDION
PERCUSSION
GUITAR
BASS
STRINGS
CHOIR&PAD
SYNTH.
XG
USER
ONE TOUCH SETTING
REGISTRATION MEMORY
MEMORY
CN6
to GLR-CN3
Component side
（部品側）

● PNR (PNR) Circuit Board

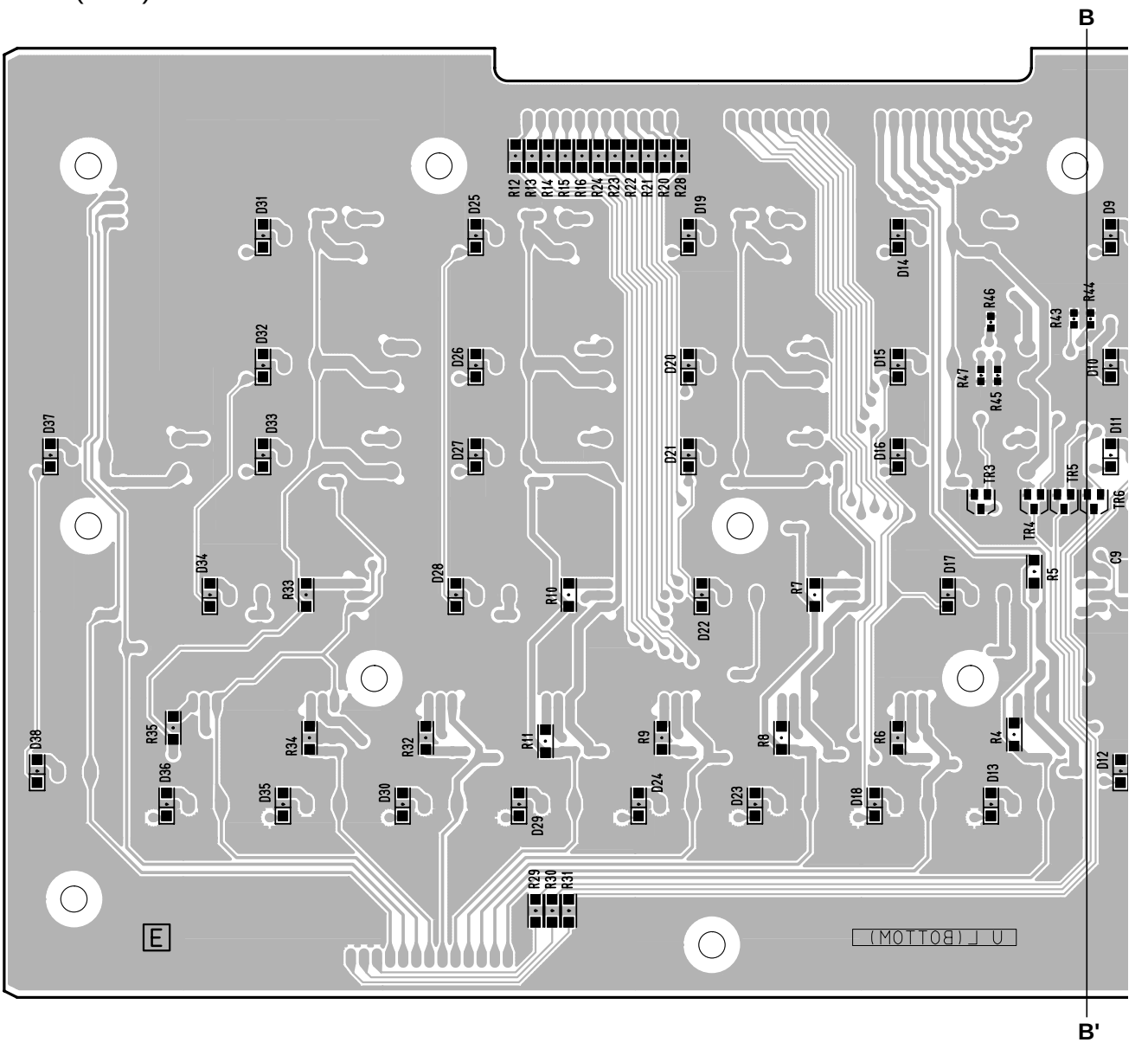


2NA-V713520-2 1

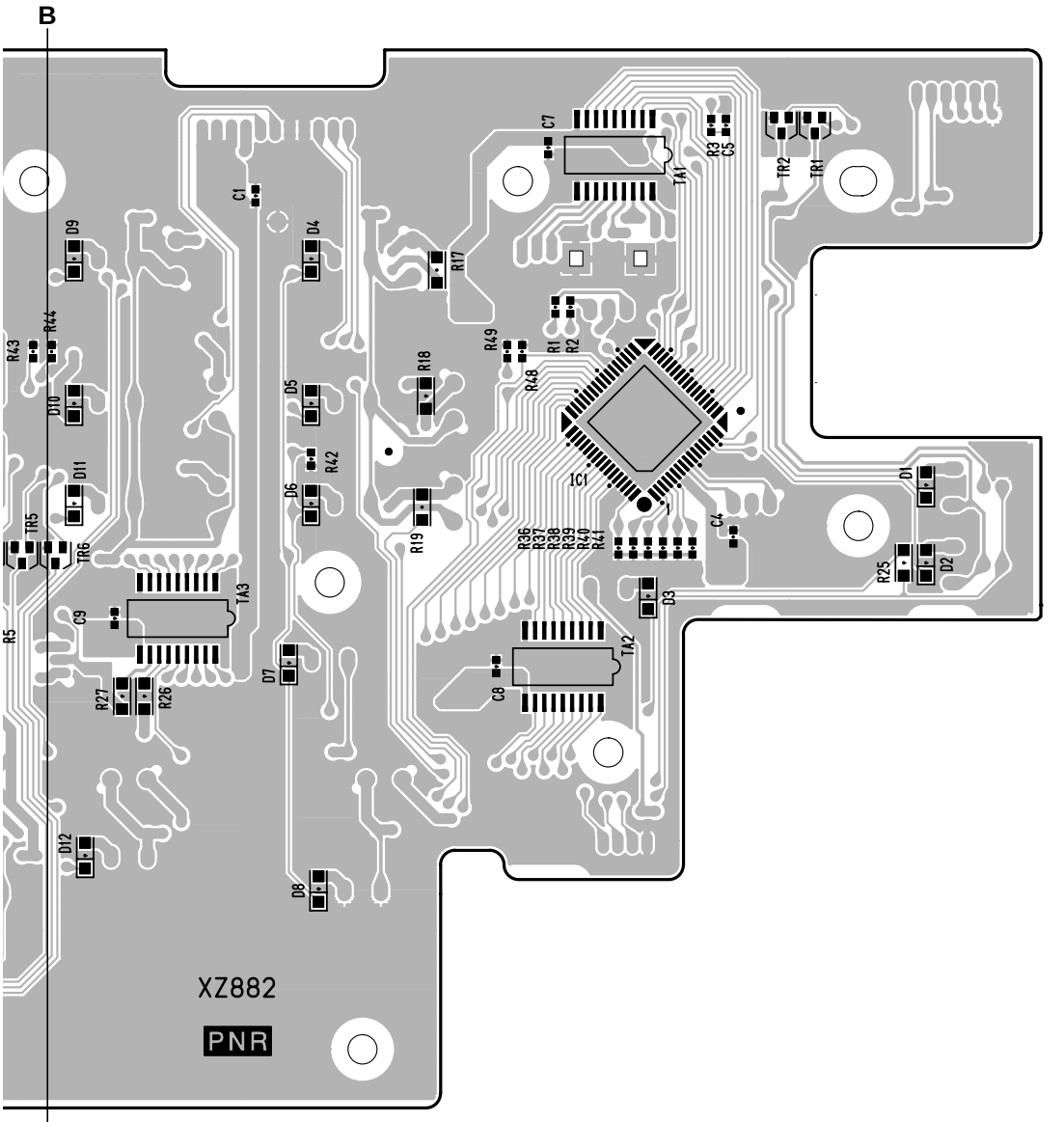


**Pattern side**
**(パターン側)**

● PNR (ENC) Circuit Board

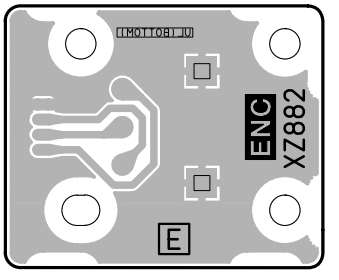


**Pattern side**
**(パターン側)**

PNR, ENC: 2NA-V713520-2 ⚠1

● PNL Circuit Board

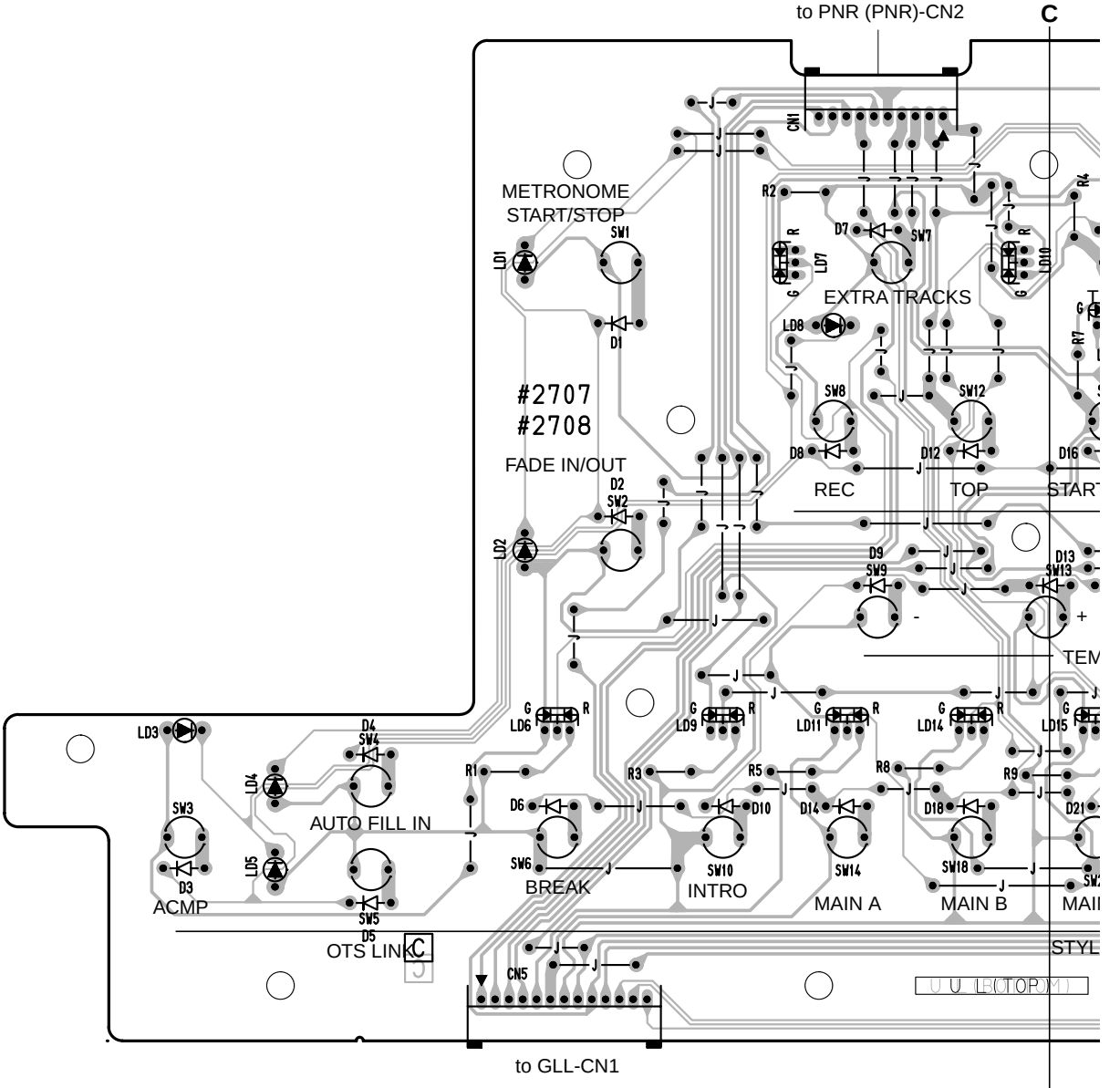


● PNCB Circuit Board

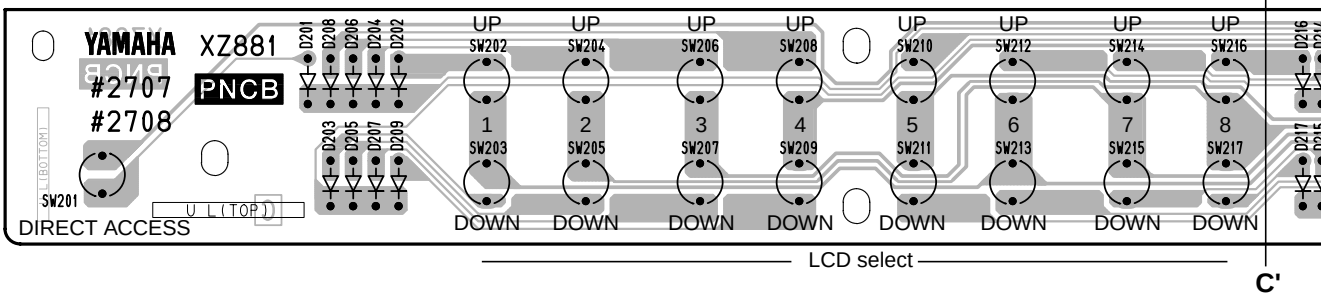


PNL, PNCB: 2NA-V713450 3

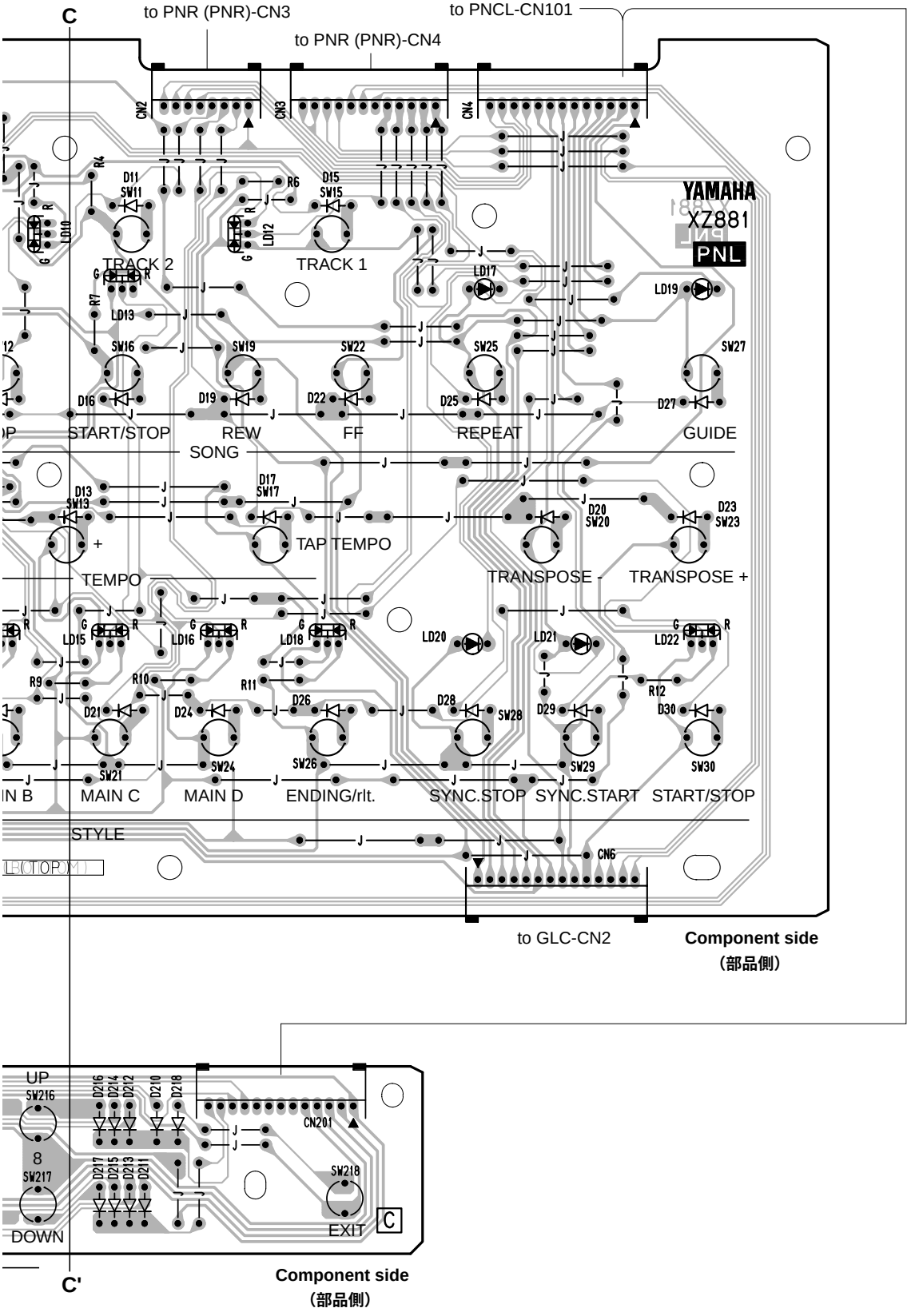


PNL, PNCB: 2NA-V713450 ⚠3

## ● PNCL Circuit Board

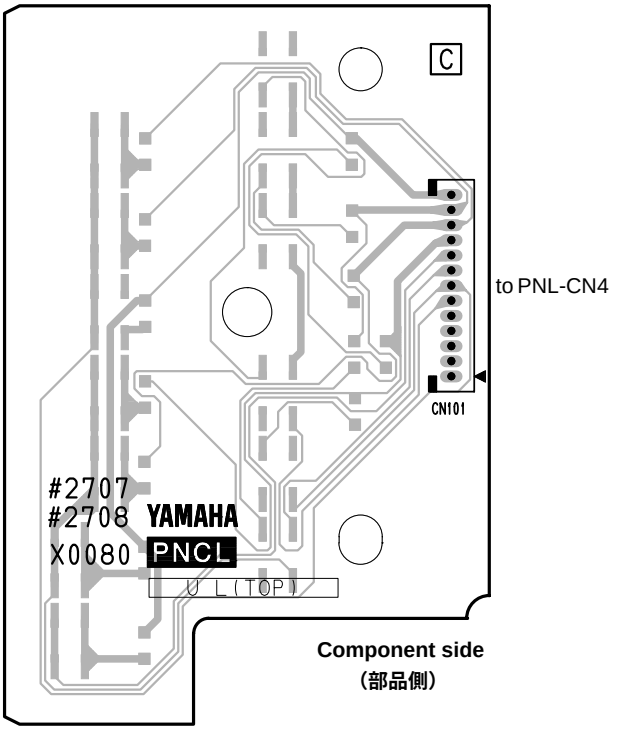


Component side
(部品側)

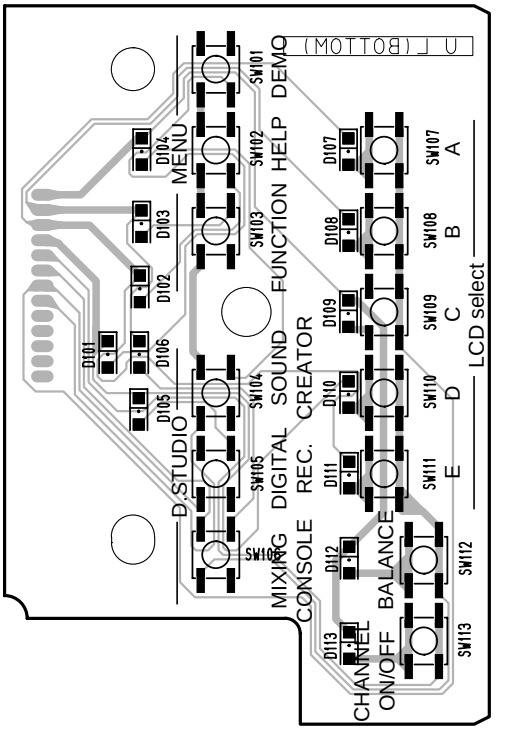


Pattern side
(パターン側)

## ● FU60 Circuit Board

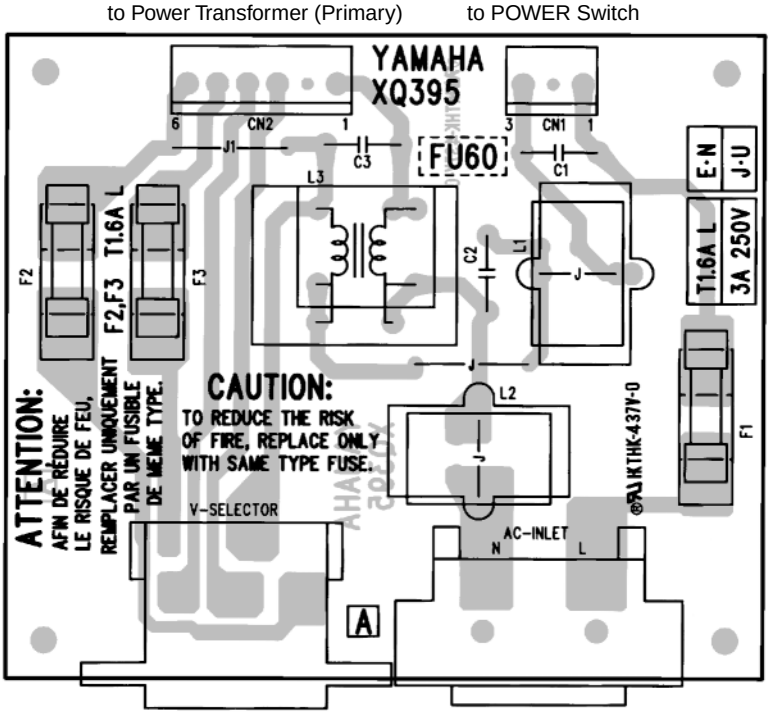


VOLTAGE SELECTOR

AC INLET

Component side
(部品側)

PARTS SPECIFICATIONS

| | | J | U | E,B,K | N |
|---|---|---|---|---|---|
| C1 | | 0.01uF | 0.01uF/125V | 0.01uF/400V | 0.01uF/400V |
| C2, C3 | | 0.0047 | 0.0047uF/125V | 0.0047uF/400V | 0.0047uF/400V |
| J1 | | ○ | ○ | ○ | × |
| FU60 | F1 | 3A | 3A | T 1.6A L | 3A |
| | F2 | × | × | × | T 1.6A L |
| | F3 | × | × | × | T 1.6A L |
| V-SEL | | × | × | × | ○ |

○: installed ×: not installed

PNCL: 2NA-V713500 ⚠1
FU60: 2NA-VT47830

● PNCR Circuit Board

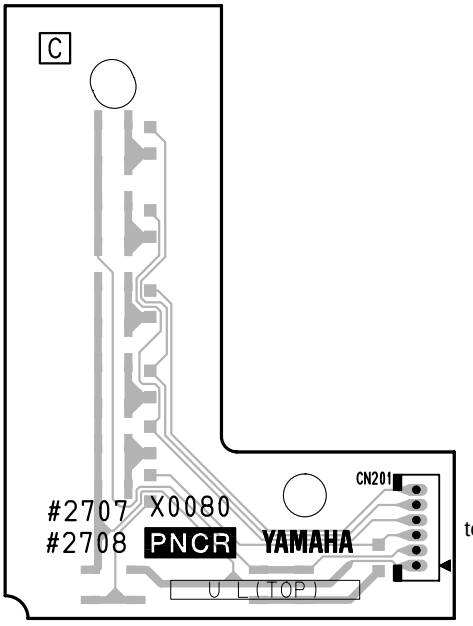


Component side
(部品側)

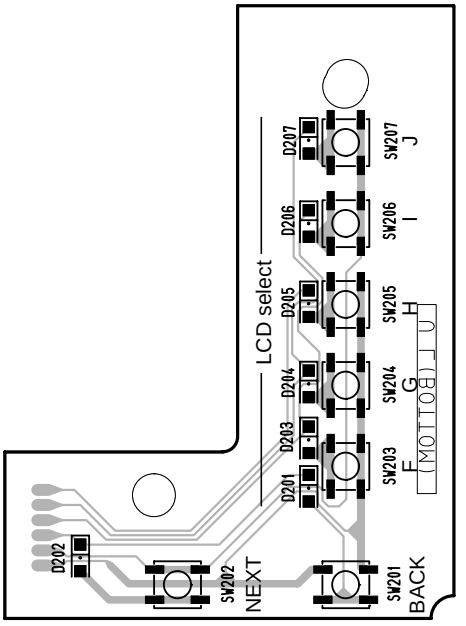


Pattern side
(パターン側)

● MIC Circuit Board

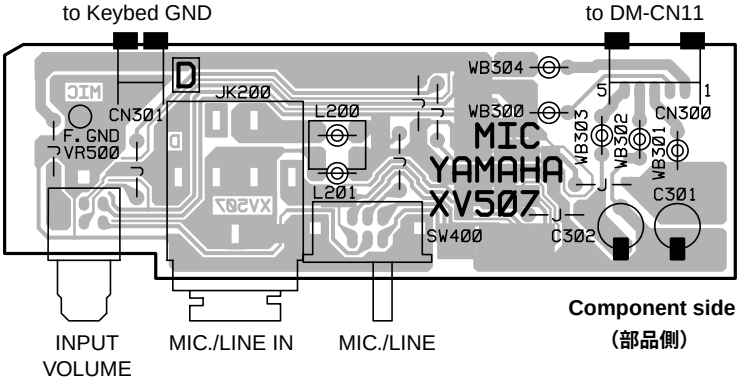


Component side
(部品側)

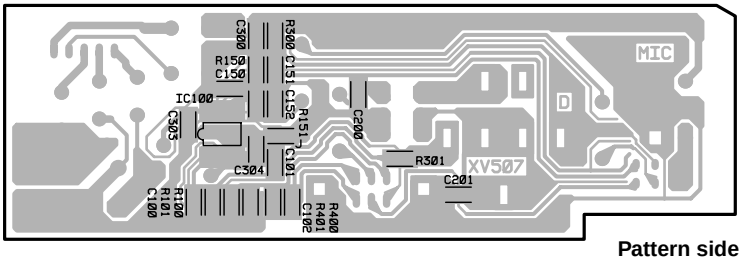


Pattern side
(パターン側)

PNCR: 2NA-V713500 (1)
MIC: 2NA-V313580 (3)

● A-JACK Circuit Board

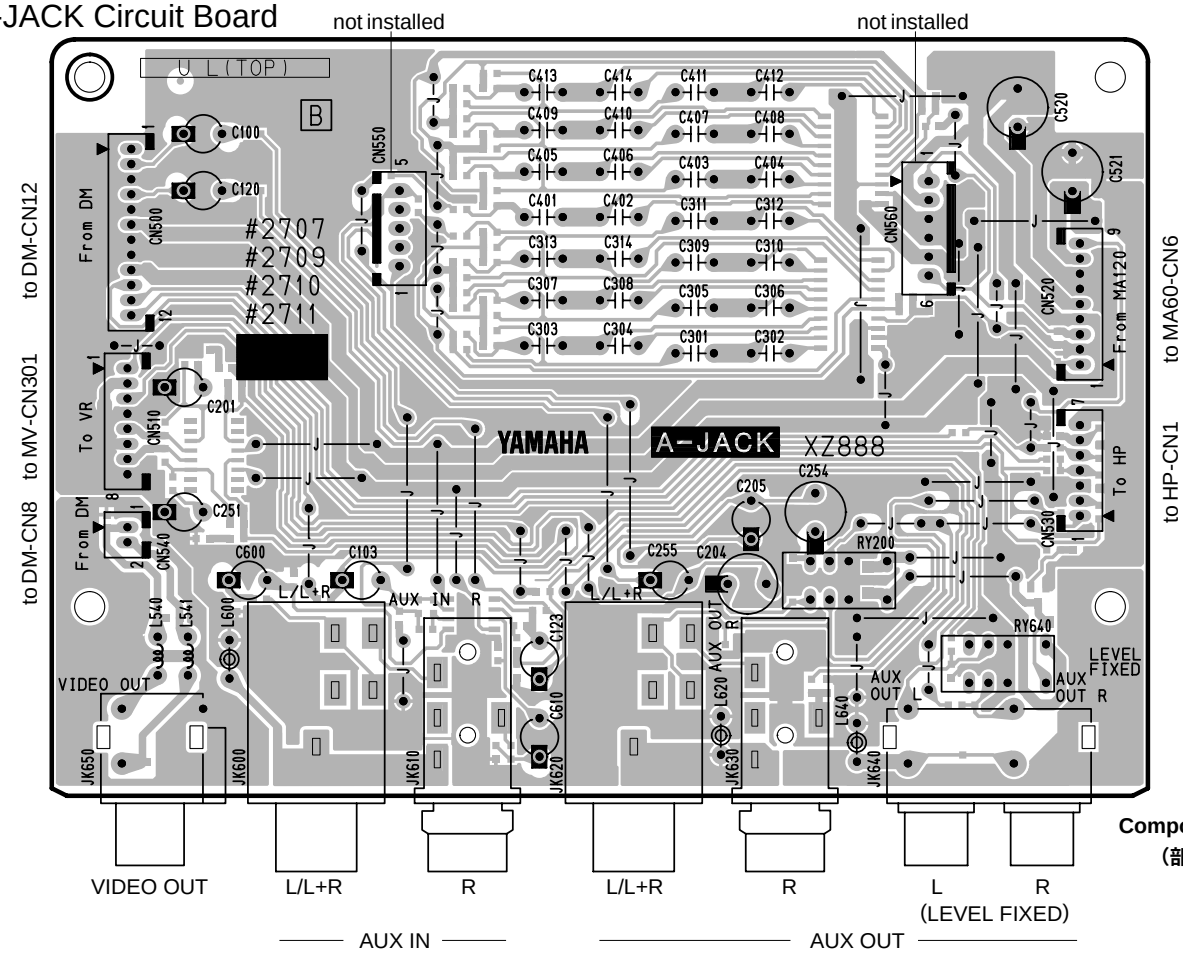


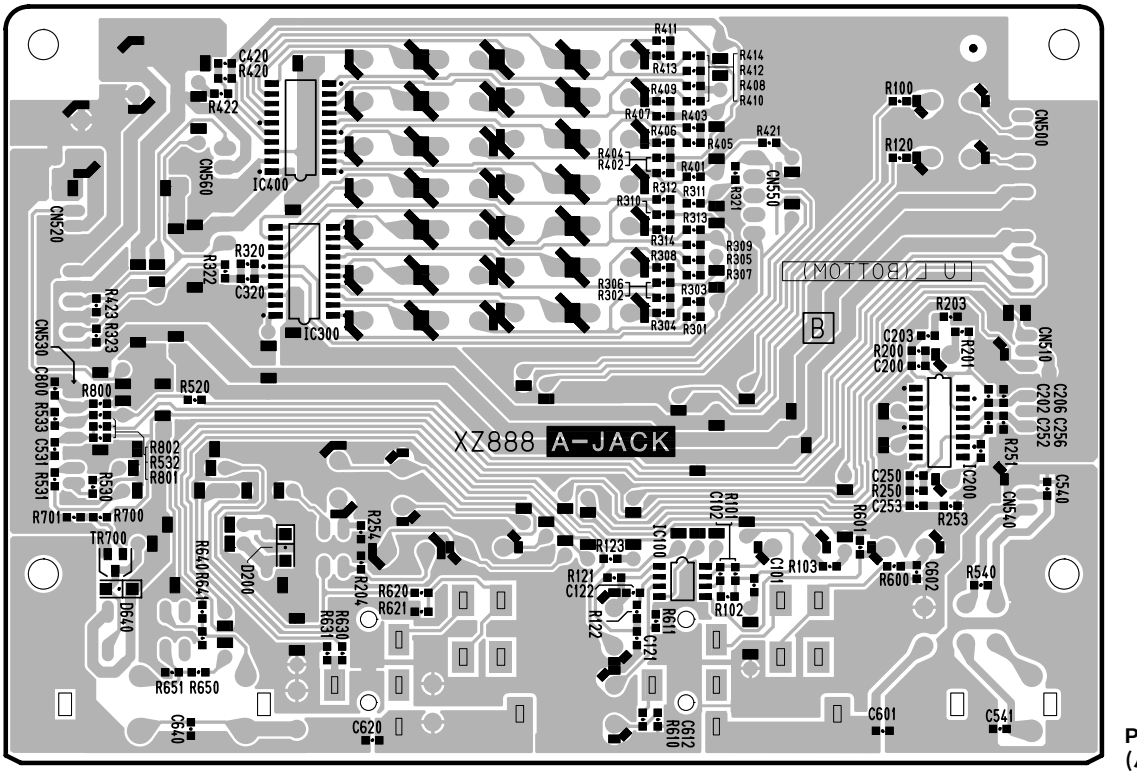


2NA-V714700 2

## ●DJK Circuit Board

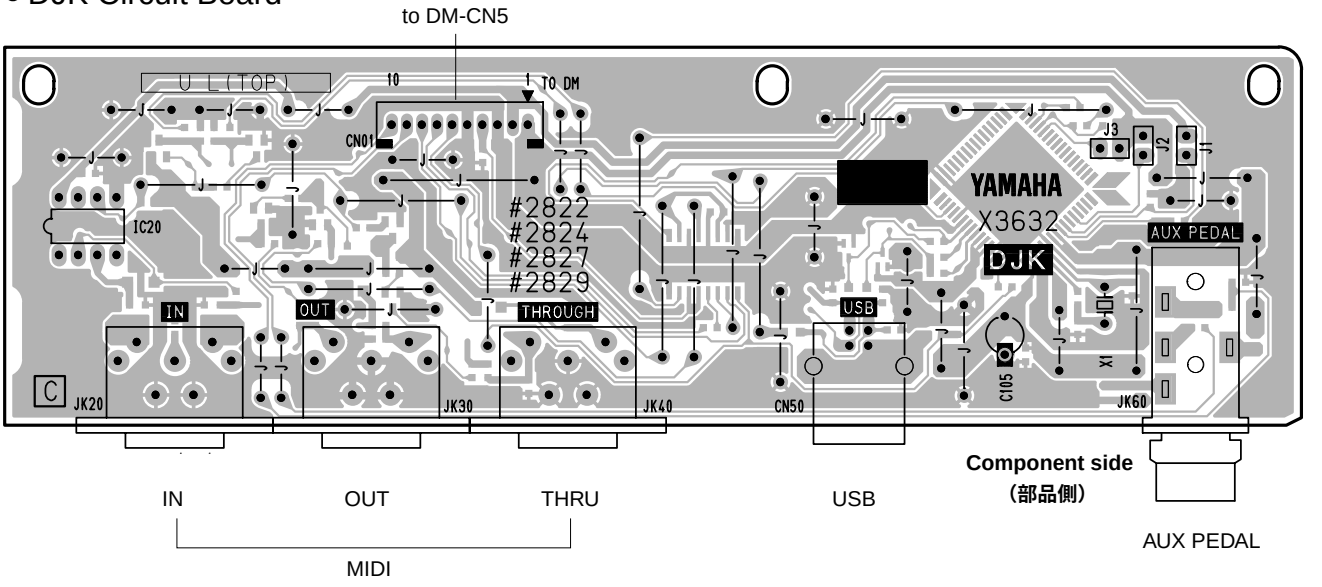


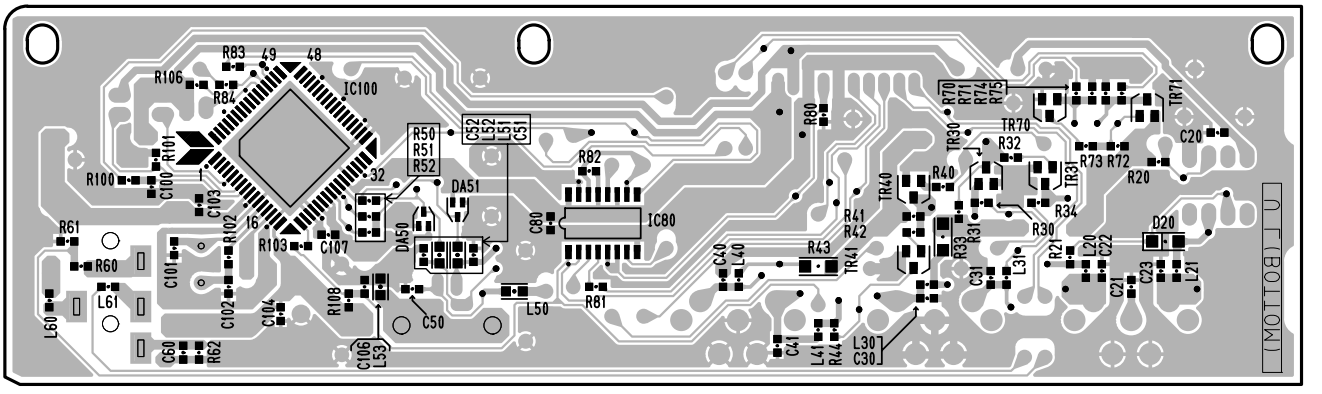


## ●PEDAL (DJK) Circuit Board

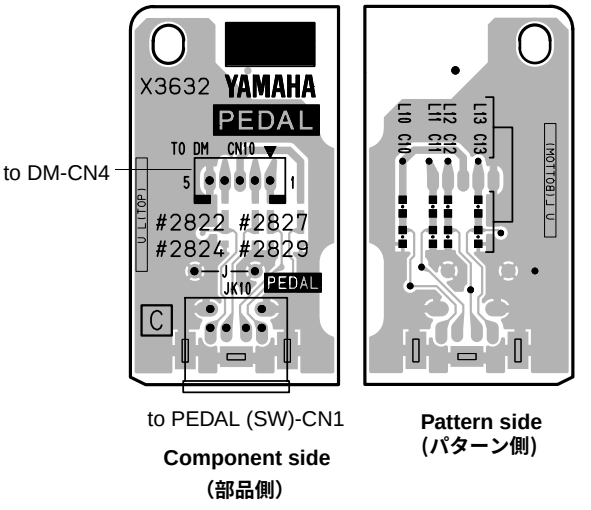


## ●HP Circuit Board

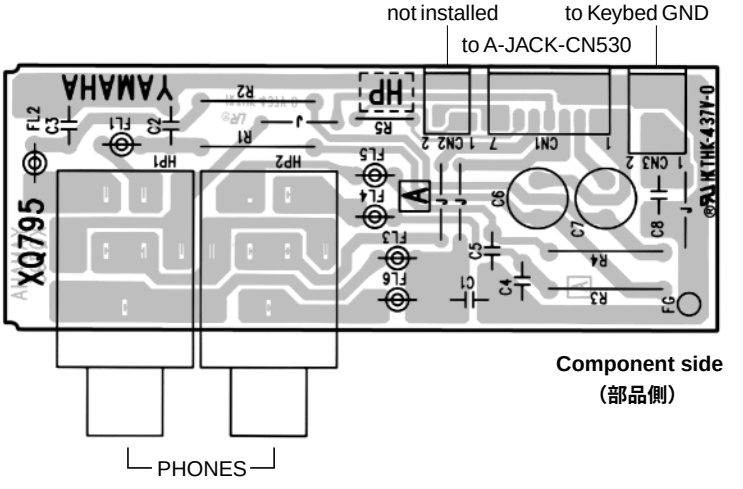


DJK, PEDAL (DJK): 2NA-WA18240 ⚠1
HP: 2NA-VT47830

## ● GLC Circuit Board

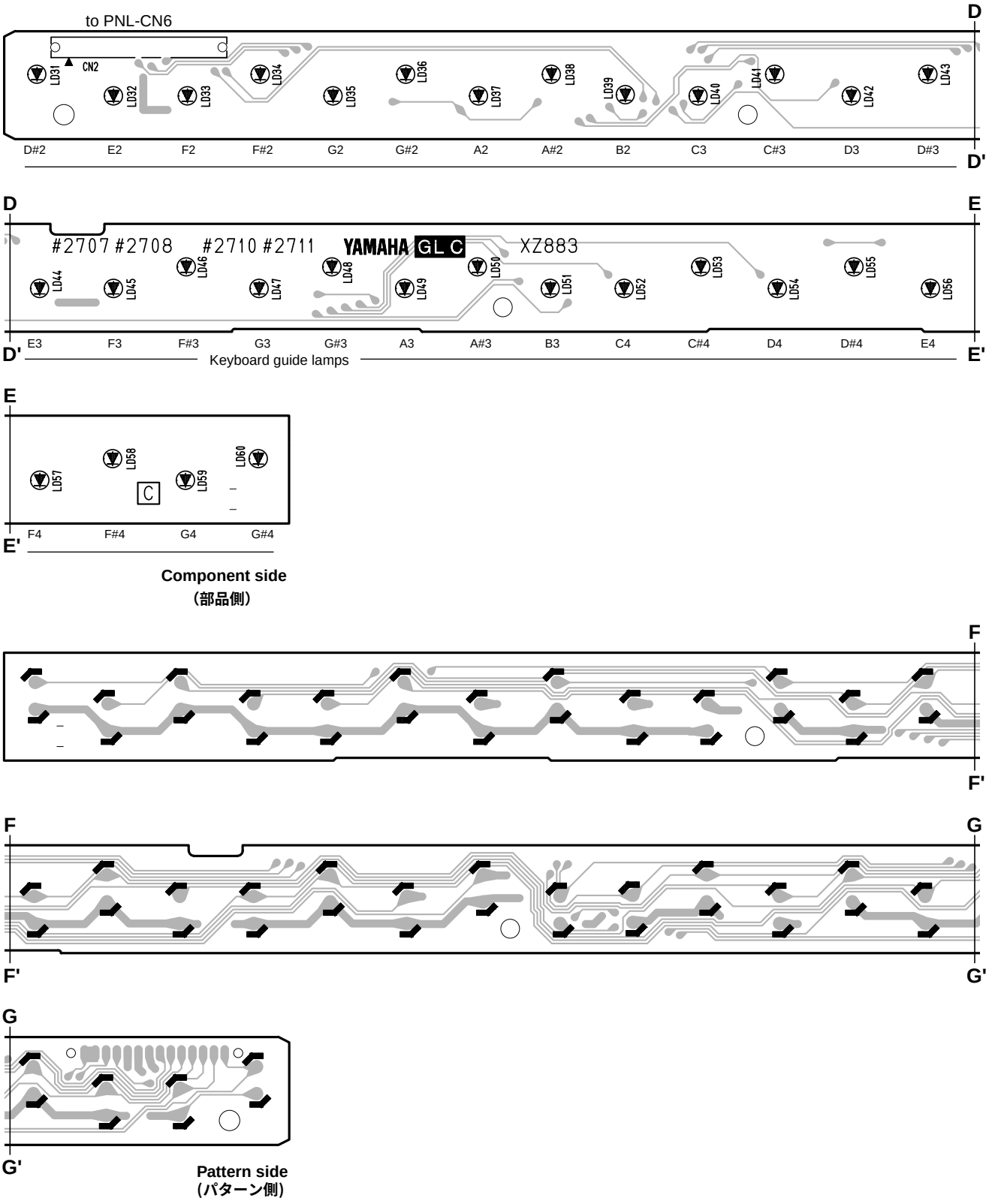


**Component side**
**（部品側）**

**Pattern side**
**（パターン側）**

2NA-V713570 2

● GLL Circuit Board

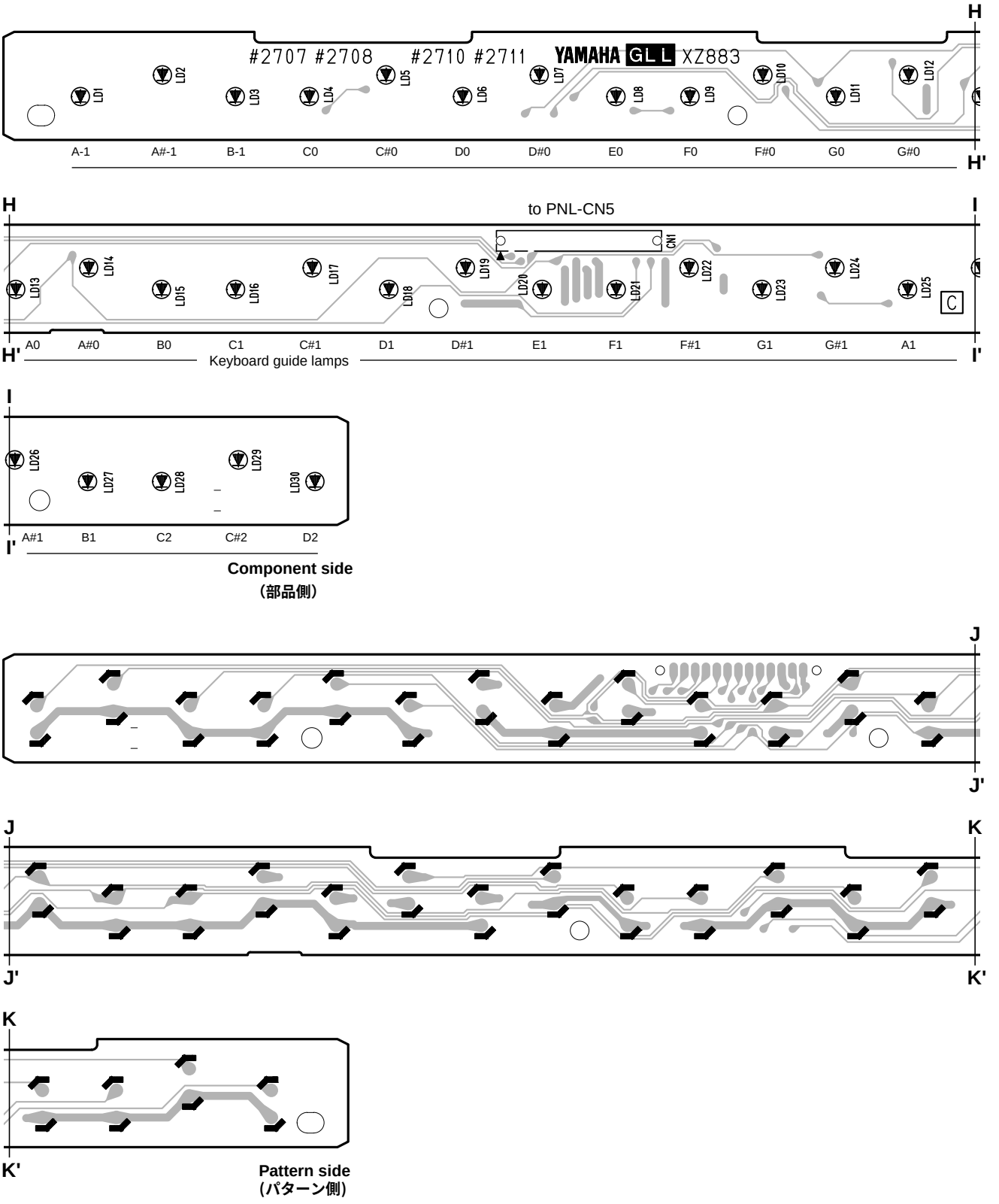


2NA-V713570 2

## ● GLR Circuit Board

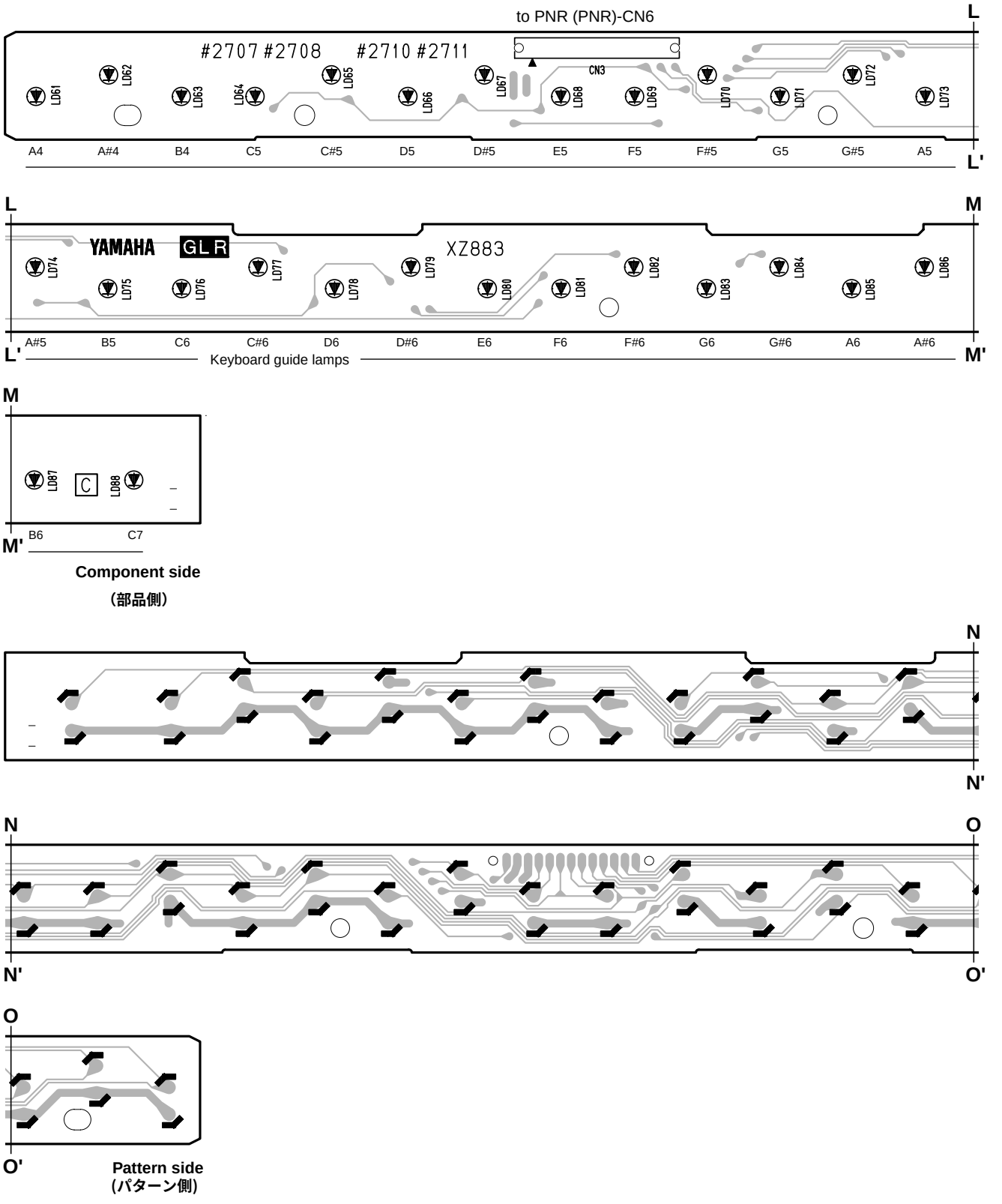

● SWX Circuit Board

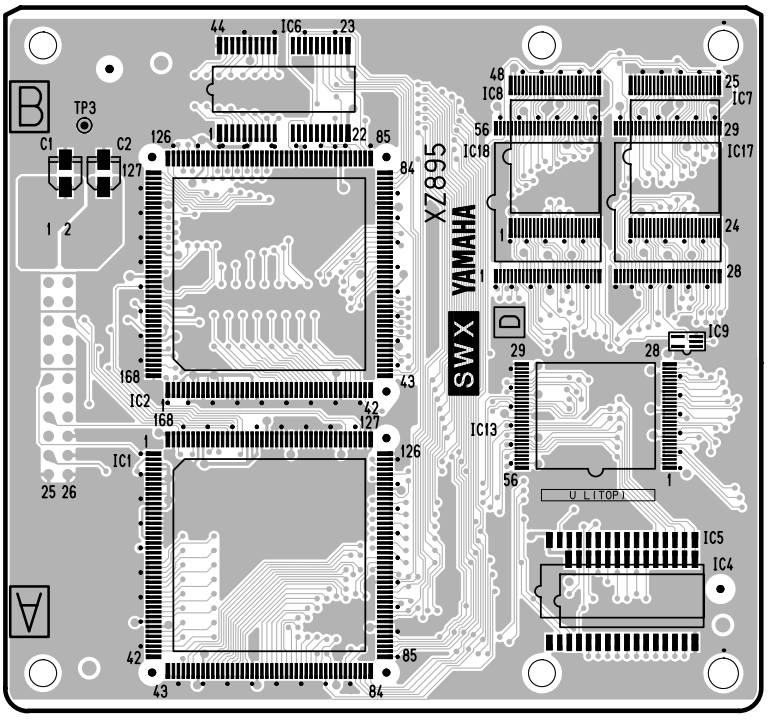


**Component side**
**（部品側）**

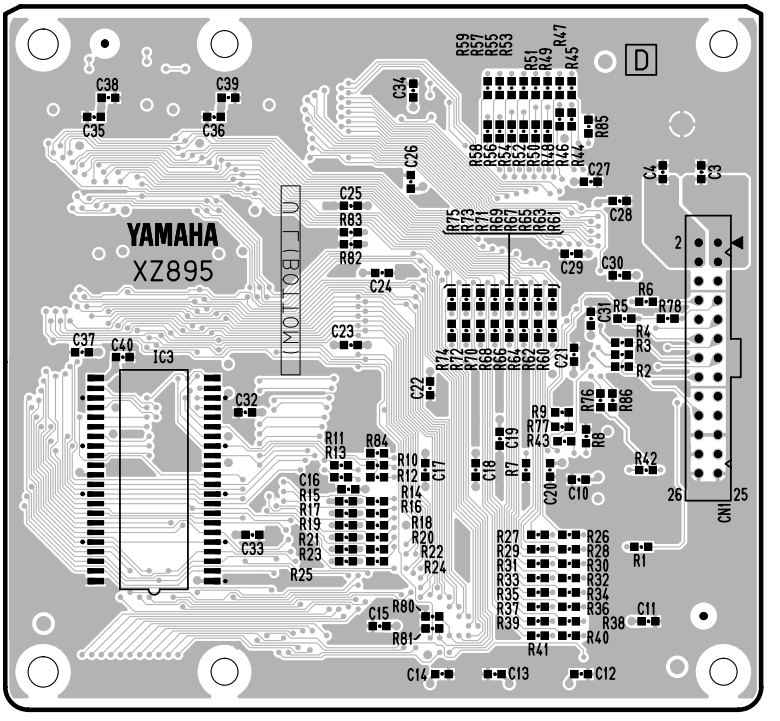


to DM-CN10

**Pattern side**
**(パターン側)**

2NA-V716050 3

## ● MA60 Circuit Board

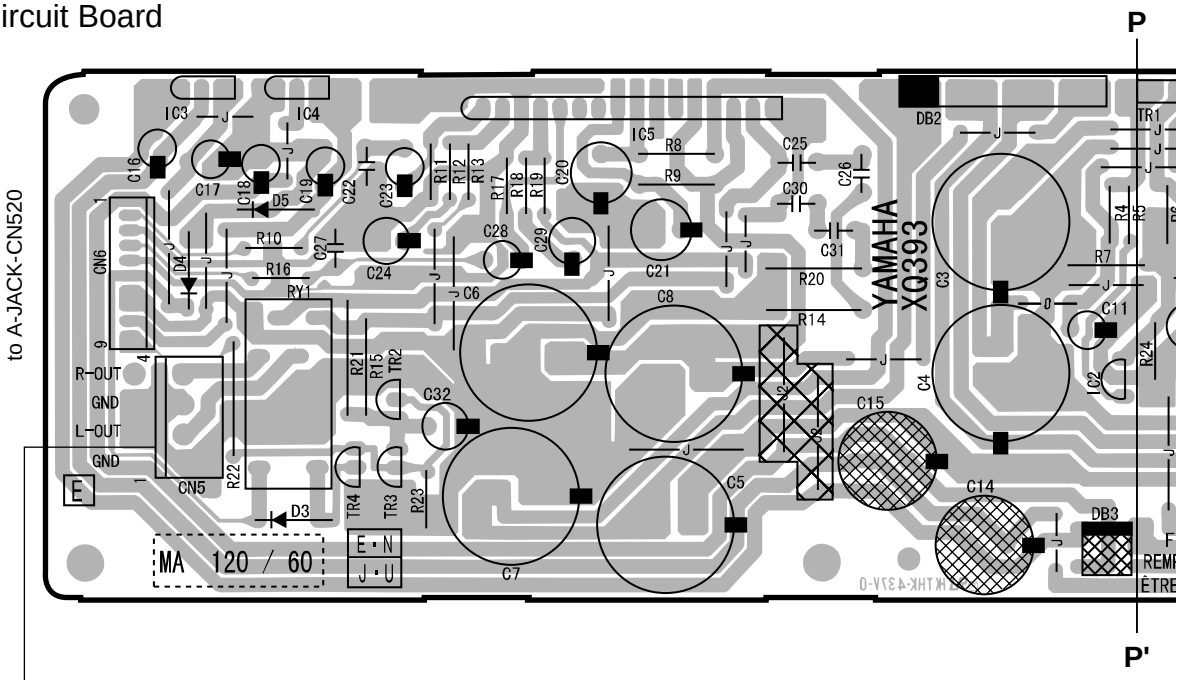


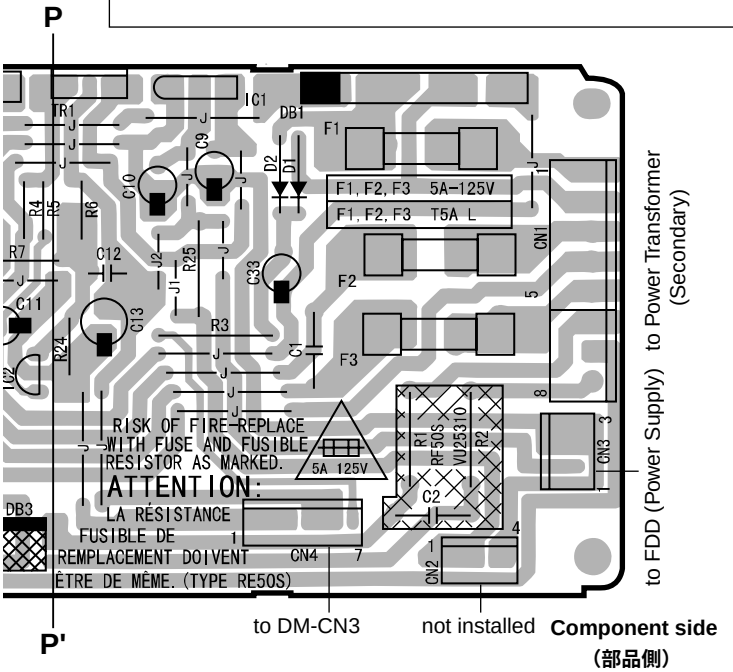


## ● NET1 Circuit Board

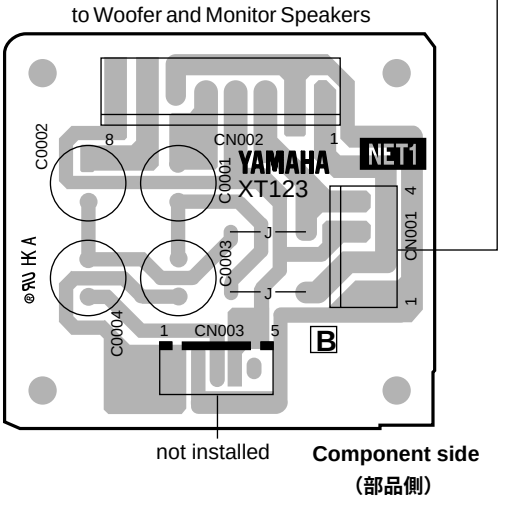


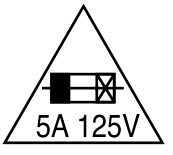


CAUTION: REPLACE WITH SAME TYPE 5A 125V FUSE.

ATTENTION: UTILISER UN FUSIBLE DE RECHANGE DE MÉME TYPE DE 5A 125V.

NOTE : The symbol ( ▬▮▬ ) shows Slow operating fuse.

MA60: 2NA-VT14340 △3

NET1: 2NA-VY64290 △1

## ● PEDAL (SW) Circuit Board

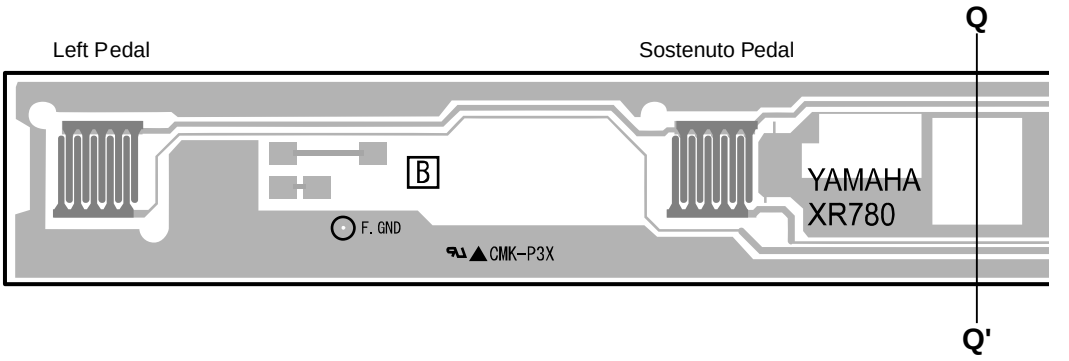


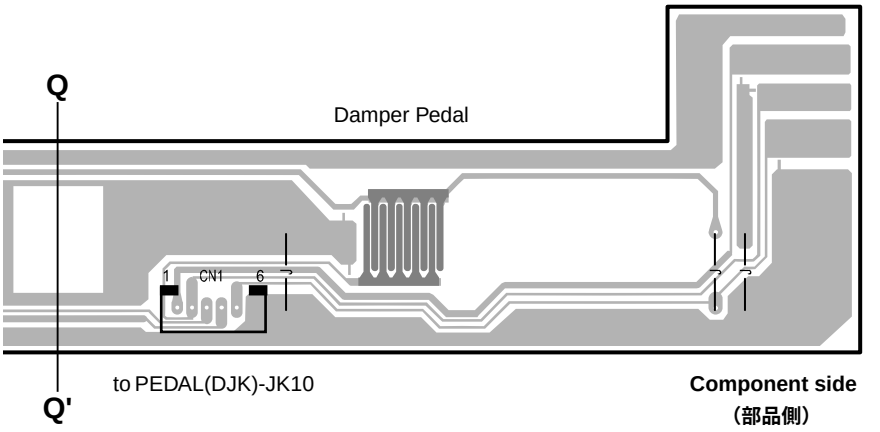


## ● PEDAL VR Circuit Board

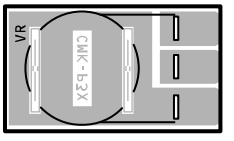


Damper Volume

**Component side**
**（部品側）**

## ● MV Circuit Board

to A-JACK-CN510

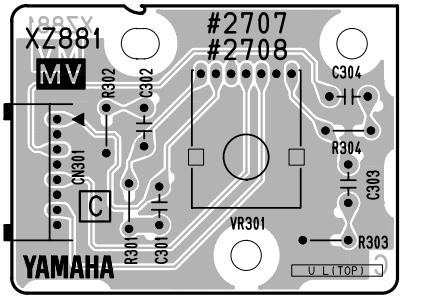


MASTER VOLUME

**Component side**
**（部品側）**

PEDAL (SW), PEDAL VR : 2NA-V233730 △1
MV : 2NA-V713450 △3

# ■ TEST PROGRAM

## 1. Preparation

1) The volume is usually moved to the use position when no volume change is required.
2) Measuring instruments: frequency counter, level meter (with JIS-C filter)
Note: Connect a stereo plug to the [PHONES] jack at 33 ohms.
3) Jigs: foot volume (FC-7), MIDI cable, floppy disk (2HD & 2DD), TV, USB cable
4) PC (Personal Computer): DOS/V type

**Note: In advance, install a MIDI-USB driver in the PC. Set to the Thru On position on the PC side.**




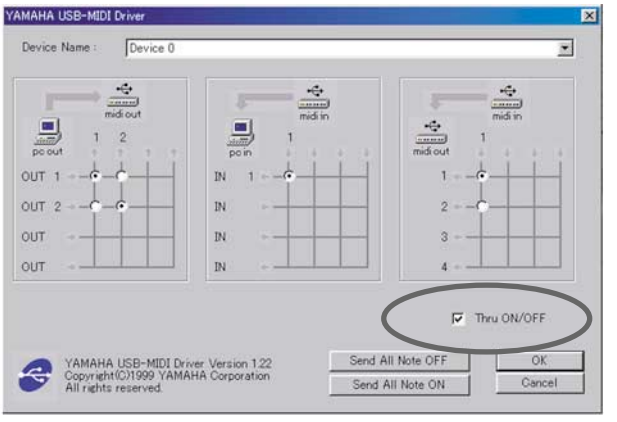


* ***Download the MIDI-USB driver from the YSISS Home Page.***
***(YSISS URL >>http://plaza.yamaha.co.jp/ysiss/exindex.nsf)***

## 2. How to enter the Test Program

While pressing the [C#2], [F2] and [G#2] keys, turn on the [POWER ON/OFF] switch.

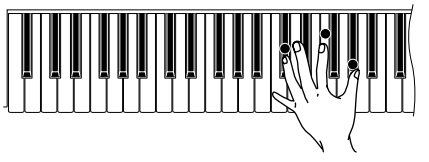

## 3. Proceeding through the Test Program

When the test program is activated, the sign “TEST” is indicated on the LCD display.
Select the test program item to be executed by pressing the [TEMPO-] or [TEMPO+] button.
Press the [START/STOP] button of [STYLE CONTROL] to execute testing. When the test result is OK, press the [START/STOP] button of [STYLE CONTROL] to return to the test item name on display. Proceed to the next test by pressing the [TEMPO-] or [TEMPO+] button. When the test result is OK, an asterisk (*) is added in front of its item name on display.
When the test result is NG, press the [DEMO] button or the lowest (leftmost) white key on the keyboard to return to the test item name on display and then turn off the [POWER ON/OFF] switch to end the test program.

## 4. Test program list

| No. | LCD | Test Function and Judgment criteria |
|---|---|---|
| 1 | 001: Version | Displays each ROM version.<br>ROM versions are displayed alternately on the LCD. |
| 2 | 002: ROM Check1 | Checks the ROMs that are connected to the CPU bus.<br>The test results appear on the LCD. Check the LCD “ROM Check1 OK” |
| 3 | 003: RAM Check1 | Checks the RAMs that are connected to the CPU bus.<br>The test results appear on the LCD. Check the LCD “RAM Check1 OK” |
| 4 | 004:Flash Check1 | Checks the Flash Memories that are connected to the CPU bus.<br>The test results appear on the LCD. Check the LCD “Flash Check1 OK” |
| 5 | 005: Wave ROM Check1 | Checks the Wave ROMs.<br>The test results appear on the LCD. Check the LCD “XG Wave ROM Check OK”<br>“Natural Wave ROM1 Check OK” |
| 6 | 006: Wave RAM Check1 | Checks the Wave RAMs.<br>The test results appear on the LCD. Check the LCD “XG Wave RAM Check OK”<br>“Natural Wave RAM1 Check OK” |
| 7 | 007: FDD Check | Checks the floppy disk drive unit.<br>Insert the floppy disks one bye one (2HD or 2DD).<br>The test will be executed immediately if an FD is inserted in the drive. After completing the test for one FD, replace it with another to continue the test.<br>Displays “FDD Check OK” if the test result is OK.<br>Displays “NO FD” and stands by for FD insertion if an FD is drawn out before completion of the test. Displays “PROTECT FD” if the write-protect switch of FD is on.<br>Displays “UNFORMAT FD” if non-formatted FD is inserted. |
| 8 | 008: Effect1 RAM Check | Checks the Reverb (Natural voice) RAM.<br>Outputs the sine wave (C3).<br>Check the sound by hearing that there is not noise or abnormal sound. |
| 10 | 010: Effect3 RAM Check | Checks the XG1 RAM.<br>Outputs the sine wave (C3).<br>Check the sound by hearing that there is not noise or abnormal sound. |
| 12 | 012: TG 1 Check | Checks the Sound Source 1 (Autoscale) (XG)<br>Sequentially outputs the sine wave starting from the low keys (from C2 to G4) by switching the channel of the sound source. |
| 13 | 013: TG 2 Check | Check the sound by hearing that there is not noise or abnormal sound.<br>Checks the Sound Source 2 (Autoscale) (Natural Voice 1)<br>Sequentially outputs the sine wave starting from the low keys (from C2 to G4) by switching the channel of the sound source.<br>Check the sound by hearing that there is not noise or abnormal sound. |
| 15 | 015: Pitch Check | Pitch check: Connect the frequency counter to the [PHONES] jack (33 ohm load).<br>Outputs the sine wave at 440 +/-0.2 Hz. (PAN = Center) |
| 16 | 016: Output R Check | Connect the level meter (with a JIS-C filter) to each terminal (PHONES, AUX OUT L/L+R, R, AUX OUT (LEVEL FIXED) L, R).<br>Set the [MASTER VOLUME] at MAX and check the R channel output level. (1 kHz sine wave, PAN=R) (PHONES L, R: 33 ohm load AUX OUT L/L+R, R: 10 kohm load AUX OUT (LEVEL FIXED) L, R: 10 kohm load)<br>PHONES L: less than -32.0 dBm PHONES R: +8.0 dBm +/-2 dB<br>AUX OUT L/L+R: less than -38.5 dBm AUX OUT R: +11.5 dBm +/-2 dB<br>AUX OUT (LEVEL FIXED) L: less than -40.0 dBm AUX OUT (LEVEL FIXED) R: +10.0 dBm +/-2 dB |

| No. | LCD | Test Function and Judgment criteria |
|---|---|---|
| 17 | 017: Output L Check | Connect the level meter (with a JIS-C filter) to each terminal (PHONES, AUX OUT L/L+R, R, AUX OUT (LEVEL FIXED) L, R).<br>Set the [MASTER VOLUME] at MAX and check the L channel output level. (1 kHz sine wave, PAN=L) (PHONES L, R: 33 ohm load AUX OUT L/L+R, R: 10 kohm load AUX OUT (LEVEL FIXED) L, R: 10 kohm load)<br>PHONES L: +8.0 dBm +/-2 dB PHONES R: less than -32.0 dBm<br>AUX OUT L/L+R: +11.5 dBm +/-2 dB AUX OUT R: less than -38.5 dBm<br>AUX OUT (LEVEL FIXED) L: +10.0 dBm +/-2 dB AUX OUT (LEVEL FIXED) R: less than -40.0 dBm |
| 18 | 018: EQ Low Check | Check the EQ-Low frequency. Measured value: +4.0 dBm +/-2 dB<br>Outputs the sine wave at about 65.4 Hz (C1). (PAN=Center) |
| 19 | 019: EQ Mid Check | Check the EQ-Mid frequency. Measured value: + 3.0 dBm +/-2 dB<br>Outputs the sine wave at about 523 Hz (C4). (PAN=Center) |
| 20 | 020: EQ High Check | Check the EQ-High frequency. Measured value: +2.5 dBm +/-2 dB<br>Outputs the sine wave at about 4186 Hz (C7). (PAN=Center) |
| | | Measurement terminal<br>MA60-CN6<br>1 pin : L ch<br>3 pin : R ch<br>2, 4 pin : GND |
| 22 | 022: D/A Noise Check | There must not be no noise generating by bit lack at the time of the pronunciation by the keyboard. |
| 23 | 023: SW, LED Check | Check the switches on the panel and LED.<br>Press the switches on the LCD as instructed. A pre-assigned note is output when the switch is pressed. (See 60-page table 1). When the switch with LED is pressed, that LED will light up. As the check result appears on the LCD when all the switches are pressed as instructed. Check that OK is displayed. For the dial check, confirm that the turning the data dial clockwise will increase the numerical value from 50 to 100 and turning it counterclockwise will reduce it from 100 to 0. |
| 24 | 024: All Panel LED On Check | Check that all panel LEDs are on. The 2-colors LED light up in orange. |
| 25 | 025: Red LED On Check | Check that all red LEDs are on. The 2-colors LED light up in red. |
| 26 | 026: Green LED On Check | Check that all green LEDs are on. The 2-colors LED light up in green. |
| 27 | 027: All Key LED On Check | Check that all key LEDs are on. |
| 28 | 028: All LCD On Check | Check that all LCD dots are on. |
| 29 | 029: All LCD Off Check | Check that all LCD dots are off. |
| 31 | 031: LCD Brightness Check | Press the [1] to [4] switches of [ONE TOUCH SETTING] in order. The brightness of the LCD grows lighter every time a switch is pressed. |
| 32 | 032: Soft Pedal Check | Check that the C3 note is output when pressing the soft pedal, and that the C4 note is output when releasing. For the check result, check that “Soft Test OK” is displayed on the LCD display. |
| 33 | 033: Sostenuto Pedal Check | Check that the C3 note is output when pressing the sostenuto pedal, and that the C4 note is output when releasing. For the check result, check that “Sostenute Test OK” is displayed on the LCD display. |
| 34 | 034: Damper Pedal Check | Check that the C3 note is output when pressing the damper pedal, and that the C4 note is output when releasing. For the check result, check that “Damper Test OK” is displayed on the LCD display. |
| 35 | 035: Aux Pedal Check | Connect the foot volume (FC-7) to the [AUX PEDAL] jack.<br>Check that the C3 note is output when fully pressing the pedal to the back (to maximum), and that the C4 note is output when fully pressing the pedal to rhe front (to minimum). For the check result, check that “Aux Pedal Check OK” is displayed on the LCD display. |
| 40 | 040: MIDI Check | After connecting the [MIDI IN] jack and [MIDI OUT] jack with a MIDI cable, execute the test. Check that the C4 note is output and that the LCD displays “MIDI Check OK”. If there is no input after one second since signal output, it is judged NG. |
| 41 | 041: USB Check | Checks the USB jack.<br>Connect the [USB] jack and the personal computer with a USB cable.<br>**Note: In advance, install a MIDI-USB driver in the PC. Set to the Thru On position on the PC side.**<br>When the test is executed, “USB Chk In” is displayed on the LCD display. For the check result, check that the C4 tone is output and “USB Chk OK” is displayed. When the cable is disconnected, “USB Chk Out” is displayed on the LCD display. |

| No. | LCD | Test Function and Judgment criteria |
|---|---|---|
| **42** | 042: MIC Check | Check the MIC output level.<br>Connect the level meter (with a JIS-C filter) to the [PHONES] jack. (PHONES L, R: 33 ohm load)<br>Apply a 1 kHz, - 50 dBm sine wave to the [MIC/LINE IN] jack.<br>Set the [MIC/LINE] select switch to [MIC] and set the [INPUT VOLUME] at maximum.<br>Set the [MASTER VOLUME] at the MAX. position and check the output level.<br>PHONES L, R: +12.0 dBm +/-2 dB |
| **43** | 043: ROM Check2 | Checks the ROMs that are connected to the CPU bus.<br>Check the LCD “ROM Check2 OK”. It takes about 25 seconds. |
| **44** | 044: RAM Check2 | Checks the RAMs that are connected to the CPU bus.<br>Check the LCD “RAM Check2 OK”. |
| **45** | 045: Flash Check2 | Checks the Flash Memories that are connected to the CPU bus.<br>Check the LCD “Flash Check2 OK”. It takes about 70 seconds. |
| **46** | 046: Wave ROM Check2 | Checks the Wave ROMs.<br>Check the LCD “XG Wave ROM Check OK”. It takes about 16 minutes 30 seconds. |
| **47** | 047: Wave RAM Check2 | Checks the Wave RAMs.<br>Check the LCD “XG Wave RAM Check OK” “Natural Wave RAM1 Check OK” |
| **48** | 048: VIDEO OUT NTSC RED<br>(J, U and K models only) | Checks the NTSC red signal of “VIDEO OUT”.<br>Connect the TV to the [VIDEO OUT] jack and check that TV characters become red. |
| **49** | 049: VIDEO OUT NTSC GREEN<br>(J, U and K models only) | Checks the NTSC green signal of “VIDEO OUT”.<br>Connect the TV to the [VIDEO OUT] jack and check that TV characters become green. |
| **50** | 050: VIDEO OUT NTSC BLUE<br>(J, U and K models only) | Checks the NTSC blue signal of “VIDEO OUT”.<br>Connect the TV to the [VIDEO OUT] jack and check that TV characters become blue. |
| **51** | 051: VIDEO OUT PAL RED<br>(B, E, N models only) | Checks the PAL red signal of “VIDEO OUT”.<br>Connect the TV to the [VIDEO OUT] jack and check that TV characters become red. |
| **52** | 052: VIDEO OUT PAL GREEN<br>(B, E, N models only) | Checks the PAL green signal of “VIDEO OUT”.<br>Connect the TV to the [VIDEO OUT] jack and check that TV characters become green. |
| **53** | 053: VIDEO OUT PAL BLUE<br>(B, E, N models only) | Checks the PAL blue signal of “VIDEO OUT”.<br>Connect the TV to the [VIDEO OUT] jack and check that TV characters become blue. |
| **55** | 055: Factory Set | If this test is executed, the Flash ROMs will be initialized when the power is turned on in the next time. |
| **56** | 056: Test Exit | Exit from the test program after executing this test. |

Note: 0 dBm = 0.775 V

Time is required to complete the checks performed by test No. 43–47.

# ■ テストプログラム

## 1. 準備

1)測定器:周波数カウンター、レベルメーター(JIS‐C フィルター使用)
注)特に指示のない限りステレオプラグを用い、33 Ω負荷を接続して[ PHONES] 端子にて測定します。
2)治具:フットボリューム(F C ‐ 7)MIDI ケーブル、フロッピーディスク(2HD&2DD 各1 枚)、TV、USBケーブル
3)パーソナルコンピューター(PC): DOS/V機

**注:PC には MIDI-USB ドライバーをインストールし、PC 側は Thru On にしておきます。**




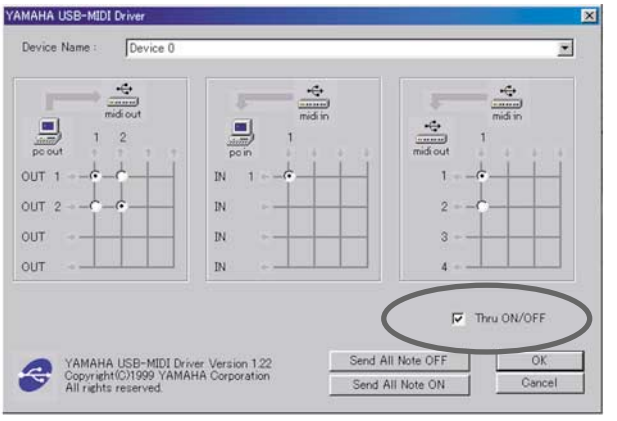


*** MIDI-USBドライバーは、ヤマハCSセンターホームページのダウンロードページからダウンロードしてください。**
***(URL >>http://plaza.yamaha.co.jp/ysiss/index.nsf)***

## 2. テストプログラムの起動

[ C2# ] と[ F2 ] と[ G2# ] の鍵盤を同時に押さえながら、[ POWER ON/OFF ] スイッチをON にします。

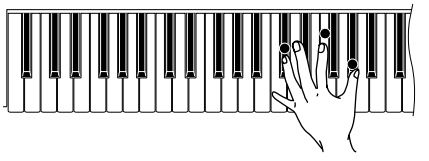

## 3. テストの進め方

テストプログラムが起動されると、LCD に“ TEST ”と表示されます。
[ TEMPO‐ ] /[ TEMPO+] ボタンを押して、テストプログラムの項目を選択します。
[ STYLE CONTROL ] の [ START/STOP] ボタンを押してテストを実行します。
**結果がOK の場合**は、再度 [ STYLE CONTROL ] の [ START/STOP] ボタンを押して項目選択表示に戻ります。
[ TEMPO‐ ] /[ TEMPO+] ボタンを押して、次のテスト項目を選択します。
テスト結果がOK だった項目名の先頭に“ ＊ ”が表示されます。
**テスト結果がNG の場合**、[ DEMO] ボタンまたは一番左端の白鍵を押して、項目選択表示に戻ります。その後、[ POWER ON/OFF] スイッチをOFF にして、テストプログラムを終了します。

## 4. テスト一覧

| No. | LCD 表示 | テスト内容及び判定条件など |
|---|---|---|
| 1 | 001: Version | ROM のバージョン表示.。各ROM のバージョンを表示します。 |
| 2 | 002: ROM Check1 | CPU のバスに接続されているROM をチェックします。<br>チェックの結果がLCD に表示されます。“ ROM Check1 OK ”が表示されることを確認します。 |
| 3 | 003: RAM Check1 | CPU のバスに接続されているRAM をチェックします。<br>チェックの結果がLCD に表示されます。“ RAM Check1 OK ”が表示されることを確認します。 |
| 4 | 004:Flash Check1 | CPU のバスに接続されているフラッシュメモリをチェックします。<br>チェックの結果がLCD に表示されます。“ Flash Check1 OK ”が表示されることを確認します。 |
| 5 | 005: Wave ROM Check1 | WAVE ROM をチェックします。<br>チェックの結果がLCD に表示されます。“ XG Wave ROM Check OK ”と“ Natural Wave ROM1 Check OK ”が表示されることを確認します。 |
| 6 | 006: Wave RAM Check1 | WAVE RAM をチェックします。<br>チェックの結果がLCD に表示されます。“ XG Wave RAM Check OK ”と“ Natural Wave RAM1 Check OK ”が表示されることを確認します。 |
| 7 | 007: FDD Check | フロッピーディスクドライブをチェックします。<br>2HD と2DD のフロッピーディスクを、1 枚ずつFDD に挿入して行います。<br>ディスクが挿入されている状態ならば、直ちにテストが行われます。途中、2DD と2HD を入れ替えて、両タイプのディスクのテストを行います。<br>正常な場合は、“ FDD Check OK ”が表示されます。テスト中にディスクを引き抜くと、“ NO FD ”が表示されてディスク挿入待ちの状態になります。<br>ライトプロテクトされたディスクを挿入した場合、“ PROTECT FD ”と表示されます。この状態ではテストには使用できません。未フォーマットのディスクを挿入した場合、“ UNFORMAT FD ”と表示されます。テストには使用できません。 |
| 8 | 008: Effect1 RAM Check | Effect1 (リバーブNatural Voice)RAM チェック<br>正弦波(C3 )を発音します。<br>異音、ノイズが無いことを確認します。 |
| 10 | 010: Effect3 RAM Check | Effect3 (XG1)RAM チェック<br>正弦波(C3 )を発音します。<br>異音、ノイズが無いことを確認します。 |
| 12 | 012: TG 1 Check | 音源1 チェック(オートスケール)(XG )<br>音源の音色を順番に切り替えながら、正弦波を低音から順次発音します。(C2 からG4 まで)<br>異音、ノイズが無いことを確認します。 |
| 13 | 013: TG 2 Check | 音源2 チェック(オートスケール)(Natural Voice 1 )<br>音源の音色を順番に切り替えながら、正弦波を低音から順次発音します。(C2 からG4 まで)<br>異音、ノイズが無いことを確認します。 |
| 15 | 015: Pitch Check | ピッチチェック:[ PHONES] 端子に周波数カウンターを接続します。<br>テストを実行すると正弦波(440 ±0.2 Hz )を発音します。(PAN=センター) |
| 16 | 016: Output R Check | R チャンネル出力チェック<br>各端子にレベルメーター(JIS‐ C フィルター使用)を接続します。<br>(PHONES, AUX OUT L/L+R, R, AUX OUT (LEVEL FIXED) L, R )<br>[ MASTER VOLUME] を最大にして、R チャンネルの出力レベルをチェックします。(1 kHz 正弦波, PAN = R )<br>(PHONES L,R:33 Ω負荷AUX OUT L/L+R,R:10 k Ω負荷AUX OUT (LEVEL FIXED)L,R:10 k Ω負荷)<br>PHONES L: ‐ 32.0 dBm 以下　PHONES R: +8.0 dBm ±2 dB<br>AUX OUT L/L+R: ‐ 38.5 dBm 以下　AUX OUT R: +11.5 dBm ±2 dB<br>AUX OUT (LEVEL FIXED)L: ‐ 40.0 dBm 以下　AUX OUT (LEVEL FIXED) R: +10.0 dBm ±2 dB |

| No. | LCD 表示 | テスト内容及び判定条件など | |
|---|---|---|---|
| 17 | 017: Output L Check | L チャンネル出力チェック<br>各端子にレベルメーター(JIS‐C フィルター使用)を接続します。<br>(PHONES,AUX OUT L/L+R, R, AUX OUT (LEVEL FIXED) L, R )<br>[ MASTER VOLUME] を最大にして、L チャンネルの出力レベルをチェックします。(1 kHz 正弦波, PAN= R )<br>(PHONES L, R: 33 Ω負荷AUX OUT L/L+R, R: 10 k Ω負荷AUX OUT (LEVEL FIXED)L, R: 10 k Ω負荷)<br>PHONES L: +8.0 dBm ±2 dB　PHONES R: ‐ 32.0 dBm 以下<br>AUX OUT L/L+R: +11.5 dBm ±2 dB　AUX OUT R: ‐ 38.5 dBm 以下<br>AUX OUT (LEVEL FIXED)L: +10.0 dBm ±2 dB　AUX OUT (LEVEL FIXED)R: ‐ 40.0 dBm 以下 | |
| 18 | 018: EQ Low Check | EQ‐LOW 周波数チェック　測定値: +4.0 dBm ±2 dB<br>65.4 Hz (C1 )の正弦波をPAN=センターで出力します。 | 測定端子<br>MA60-CN6<br>1 pin : L ch<br>3 pin : R ch<br>2, 4 pin : GND |
| 19 | 019: EQ Mid Check | EQ‐MID 周波数チェック　測定値: +3.0 dBm ±2 dB<br>523 Hz (C4 )の正弦波をPAN=センターで出力します。 | |
| 20 | 020: EQ High Check | EQ‐HIGH 周波数チェック　測定値: +2.5 dBm ±2 dB<br>4186 Hz (C7 )の正弦波をPAN=センターで出力します。 | |
| 22 | 022: D/A Noise Check | 押鍵発音時、ビット落ちノイズ等が無いことを確認します。 | |
| 23 | 023: SW, LED Check | パネルスイッチ、LED チェック<br>LCD に表示されるスイッチ名を見てそのスイッチを順にON すると、それぞれ決められた音程で発音します。(P.60 の表1 参照)また、LED のあるスイッチの場合は、LED も点灯します。すべてのスイッチを押し終えると、LCD に“ SW,LED check OK ”と表示されます。<br>ダイアルのチェックも行います。データダイアルを時計回りに回すと、LCD に表示される数字が50 ～100 まで変化していき、続いて反時計回りに回すと、数字が100 ～0 に変化していく事を確認します。 | |
| 24 | 024: All Panel LED On Check | すべてのLED が点灯することを確認します。2 色LED はオレンジ色に点灯します。 | |
| 25 | 025: Red LED On Check | すべての赤色LED が点灯することを確認します。2 色LED は赤色に点灯します。 | |
| 26 | 026: Green LED On Check | すべての緑色LED が点灯することを確認します。2 色LED は緑色に点灯します。 | |
| 27 | 027: All Key LED On Check | すべての鍵盤LED が点灯することを確認します。 | |
| 28 | 028: All LCD On Check | すべてのLCD ドットが点灯することを確認します。 | |
| 29 | 029: All LCD Off Check | すべてのLCD ドットが消灯することを確認します。 | |
| 31 | 031: LCD Brightness Check | [ ONE TOUCH SETTING ] の[ 1 ] から[ 4 ] のスイッチを指示に従って押します。スイッチを押すごとにLCD が明るくなることを確認します。 | |
| 32 | 032: Soft Pedal Check | ソフトペダルチェック<br>テストを実行し、ソフトペダルを踏むとC3 を発音し、離すとC4 を発音することを確認します。チェックの結果がLCD に表示されます。“ Soft Test OK ”が表示されることを確認します。 | |
| 33 | 033: Sostenuto Pedal Check | ソステヌートペダルチェック。テストを実行し、ソステヌートペダルを踏むとC3 を発音し、離すとC4 を発音することを確認します。チェックの結果がLCD に表示されます。“ Sostenuto Test OK ”が表示されることを確認します。 | |
| 34 | 034: Damper Pedal Check | ダンパーペダルチェック。テストを実行し、ダンパーペダルを踏むとC3 を発音し、離すとC4 を発音することを確認します。チェックの結果がLCD に表示されます。“ Damper Test OK ”が表示されることを確認します。 | |
| 35 | 035: Aux Pedal Check | [ AUX PEDAL] 端子にフットボリューム(FC‐7 )を接続します。<br>ペダルを奥までいっぱいに踏む(DOWN )とC3 を発音し、手前いっぱいに踏む(UP )とC4 を発音することを確認します。チェックの結果がLCD に表示されます。“ Aux Pedal Check OK ”が表示されることを確認します。 | |
| 40 | 040: MIDI Check | [ MIDI IN] 端子と[ MIDI OUT] 端子をMIDI ケーブルで接続した後、テストを実行します。C4 を発音し、LCD に“ MIDI Check OK ”が表示されることを確認します。 | |
| 41 | 041: USB Check | USB 端子チェック<br>[USB] 端子とパーソナルコンピューターを USB ケーブルで接続します。<br>**注：PC には USB-MIDI ドライバーをインストールし、PC 側は Thru On にしておきます。**<br>テストを実行すると、LCD に“ USB Chk In ”が表示されます。チェックの結果が LCD に表示されます。C4 を発音して、“ USB Chk OK ”が表示されることを確認します。<br>ケーブルを抜き取ると、LCD に“ USB Chk Out ”が表示されます。 | |

| No. | LCD 表示 | テスト内容及び判定条件など |
|---|---|---|
| 42 | 042: MIC Check | MIC出力チェック。<br>[ PHONES ]端子にレベルメーター(JIS- C フィルター使用)を接続します。<br>(PHONES L, R: 33 Ω負荷)<br>[ MIC/LINE IN ] 端子に1kHz、-50 dBmの正弦波を入力します。(このとき、[ MIC/LINE ] セレクトスイッチは[ MIC ] に、[ INPUT VOLUME ] は最大にしておきます。)<br>[ MASTER VOLUME ] を最大にして、出力レベルをチェックします。<br>PHONES L/R: +12.0 dBm ±2 dB |
| 43 | 043: ROM Check2 | CPU のバスに接続されているすべてのROM をチェックします。<br>チェックの結果がLCD に表示されます。“ ROM Check2 OK ”が表示されることを確認します。<br>約25 秒かかります。 |
| 44 | 044: RAM Check2 | CPU のバスに接続されているすべてのRAM をチェックします。<br>チェックの結果がLCD に表示されます。“ RAM Check2 OK ”が表示されることを確認します。 |
| 45 | 045: Flash Check2 | CPU のバスに接続されているすべてのフラッシュメモリをチェックします。<br>チェックの結果がLCD に表示されます。“ Flash Check2 OK ”が表示されることを確認します。<br>約70 秒かかります。 |
| 46 | 046: Wave ROM Check2 | WAVE ROM をチェックします。<br>チェックの結果がLCD に表示されます。“ XG Wave ROM Check OK ”が表示されることを確認します。<br>約16分30 秒かかります。 |
| 47 | 047: Wave RAM Check2 | WAVE RAM をチェックします。<br>チェックの結果がLCD に表示されます。“ XG Wave RAM Check OK ”と“ Natural Wave RAM1 Check OK ”が表示されることを確認します。 |
| 48 | 048: VIDEO OUT NTSC RED<br>(J, U, K 仕向のみ) | VIDEO OUT のNTSC 赤色信号のチェックをします。<br>[ VIDEO OUT] 端子にテレビを接続した後テストを実行し、テレビの文字が赤色になることを確認します。 |
| 49 | 049: VIDEO OUT NTSC GREEN<br>(J, U, K 仕向のみ) | VIDEO OUT のNTSC 緑色信号のチェックをします。<br>[ VIDEO OUT] 端子にテレビを接続した後テストを実行し、テレビの文字が緑色になることを確認します。 |
| 50 | 050: VIDEO OUT NTSC BLUE<br>(J, U, K 仕向のみ) | VIDEO OUT のNTSC 青色信号のチェックをします。<br>[ VIDEO OUT] 端子にテレビを接続した後テストを実行し、テレビの文字が青色になることを確認します。 |
| 51 | 051: VIDEO OUT PAL RED<br>(B, E, N 仕向のみ) | VIDEO OUT のPAL 赤色信号のチェックをします。<br>[ VIDEO OUT] 端子にテレビを接続した後テストを実行し、テレビの文字が赤色になることを確認します。 |
| 52 | 052: VIDEO OUT PAL GREEN<br>(B, E, N 仕向のみ) | VIDEO OUT のPAL 緑色信号のチェックをします。<br>[ VIDEO OUT] 端子にテレビを接続した後テストを実行し、テレビの文字が緑色になることを確認します。 |
| 53 | 053: VIDEO OUT PAL BLUE<br>(B, E, N 仕向のみ) | VIDEO OUT のPAL 青色信号のチェックをします。<br>[ VIDEO OUT] 端子にテレビを接続した後テストを実行し、テレビの文字が青色になることを確認します。 |
| 55 | 055: Factory Set | テストを実行すると、次回電源投入時Flash ROM に工場出荷状態のデータをセットします。<br>LCD に“ Factory Set OK ”と表示されることを確認します。 |
| 56 | 056: Test Exit | テストを実行すると、テストプログラムから抜けて、プレイモードになります。 |

※ 0 dBm = 0.775 V
※ No.43 ～47 のテストについては、時間がかかりますので、時間がない場合は[ TEMPO+] ボタンを数回押して、テストNo.48に進んでください。

## Table 1 （表1）

| ORDER | SWITCH | NOTE | ORDER | SWITCH | NOTE |
|---|---|---|---|---|---|
| 1 | METRONOME | C2 | 54 | 5-L | E2 |
| 2 | EXTRA TRACKS | C#2 | 55 | 6-U | F2 |
| 3 | TRACK2 | D2 | 56 | 6-L | F#2 |
| 4 | TRACK1 | D#2 | 57 | 7-U | G2 |
| 5 | REC | E2 | 58 | 7-L | G#2 |
| 6 | TOP | F2 | 59 | 8-U | A2 |
| 7 | START/STOP (SONG) | F#2 | 60 | 8-L | A#2 |
| 8 | RW | G2 | 61 | EXIT | B2 |
| 9 | FF | G#2 | 62 | BACK | C3 |
| 10 | REPEAT | A2 | 63 | NEXT | C#3 |
| 11 | GUIDE | A#2 | 64 | F | D3 |
| 12 | FADE IN/OUT | B2 | 65 | G | D#3 |
| 13 | TEMPO - | C3 | 66 | H | E3 |
| 14 | TEMPO + | C#3 | 67 | I | F3 |
| 15 | TAP TEMPO | D3 | 68 | J | F#3 |
| 16 | TRANSPOSE - | D#3 | 69 | LAYER | G3 |
| 17 | TRANSPOSE + | E3 | 70 | LEFT | G#3 |
| 18 | ACCOMP. ON/OFF | F3 | 71 | ENTER | A3 |
| 19 | AUTO FILL IN | F#3 | 72 | REVERB | A#3 |
| 20 | OTS LINK | G3 | 73 | DSP | B3 |
| 21 | BREAK | G#3 | 74 | SLOW/FAST | C4 |
| 22 | INTRO | A3 | 75 | HARMONY/ECHO | C#4 |
| 23 | MAIN A | A#3 | 76 | POLY/MONO | D4 |
| 24 | MAIN B | B3 | 77 | LEFT HOLD | D#4 |
| 25 | MAIN C | C4 | 78 | PIANO & HARPSI. | E4 |
| 26 | MAIN D | C#4 | 79 | E.PIANO | F4 |
| 27 | ENDING | D4 | 80 | PERCUSSION | F#4 |
| 28 | SYNC STOP | D#4 | 81 | GUITAR | G4 |
| 29 | SYNC START | E4 | 82 | BASS | G#4 |
| 30 | START/STOP (STYLE) | F4 | 83 | ORGAN FLUTES | A4 |
| 31 | DEMO | F#4 | 84 | BRASS | A#4 |
| 32 | HELP | G4 | 85 | W.WIND | B4 |
| 33 | FUNCTION | G#4 | 86 | STRINGS | C5 |
| 34 | SOUND CREATOR | A4 | 87 | CHOIR & PAD | C#5 |
| 35 | DIGITAL RECORDING | A#4 | 88 | SYNTH. | D5 |
| 36 | MIXING CONSOLE | B4 | 89 | XG | D#5 |
| 37 | A | C5 | 90 | USER | E5 |
| 38 | B | C#5 | 91 | MUSIC FINDER | F5 |
| 39 | C | D5 | 92 | OTS1 | F#5 |
| 40 | D | D#5 | 93 | OTS2 | G5 |
| 41 | E | E5 | 94 | OTS3 | G#5 |
| 42 | BALANCE | F5 | 95 | OTS4 | A5 |
| 43 | PART ON/OFF | F#5 | 96 | PIANO | A#5 |
| 44 | DIRECT ACCESS | G5 | 97 | FREEZE | B5 |
| 45 | 1-U | G#5 | 98 | REGIST1 | C6 |
| 46 | 1-L | A5 | 99 | REGIST2 | C2 |
| 47 | 2-U | A#5 | 100 | REGIST3 | C#2 |
| 48 | 2-L | B5 | 101 | REGIST4 | D2 |
| 49 | 3-U | C6 | 102 | REGIST5 | D#2 |
| 50 | 3-L | C2 | 103 | REGIST6 | E2 |
| 51 | 4-U | C#2 | 104 | REGIST7 | F2 |
| 52 | 4-L | D2 | 105 | REGIST8 | F#2 |
| 53 | 5-U | D#2 | 106 | MEMORY | G2 |

# ■ SYSTEM RESET

This operation lets you restore the CVP-206/CVP-206M/CVP-206C to its original factory settings. These settings include System Setup, MIDI Setup, User Effect, Music Finder, and Files & Folders.

Restores the System Setup parameters to the original factory settings. You can also restore only the System Setup settings by simultaneously holding down the highest key on the keyboard (C7) and turning on the power.

Restores the MIDI templates to the original factory settings.

Restores the User Effects to the original factory settings.

Restores the Music Finder data to the original factory

Deletes all files and folders stored in the User page.

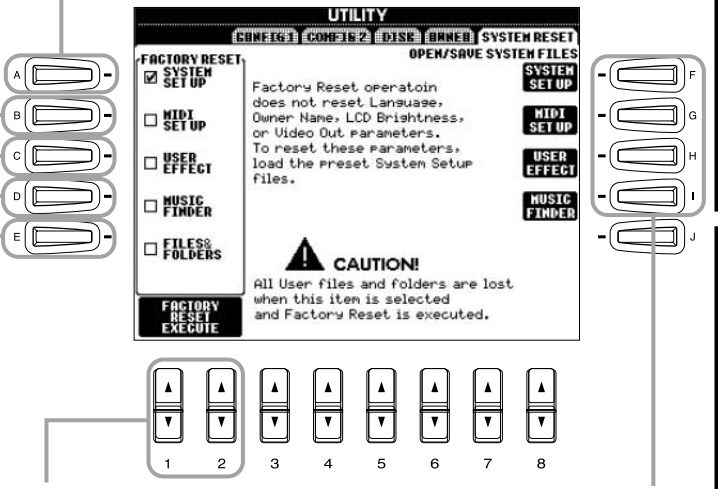


Executes the Factory Reset operation for all items checkmarked above.

These call up the corresponding Open/Save displays. These let you store the corresponding data as files to disk, for future recall. Pressing each of these buttons calls up the corresponding Open/Save display, from which you can select the corresponding PRESETpage. From this PRESET page, you can save the relevant data.

**NOTE**

The functions and settings below do not apply to the Factory Reset operation. However, you can restore these to their original settings by calling up the preset System Setup files, using the Open/Save System Files function.
Language
Owner Name
LCD Brightness
Video Out settings (NTSC/PAL, Size, Character Color,Background Color)

**NOTE**

All Music Finder records can be stored together as a single file. When calling up a stored file, a message appears prompting you to replace or append the records as desired.
**Replace:**
All Music Finder records currently in the instrument are deleted and replaced with the records of the selected file.
**Append:**
The records called up are added to the vacant record numbers.

# ■ システムリセット

**SYSTEM SETUPの項目(別冊データリストのパラメーター一覧)を工場出荷時の状態に戻します。一番右側の鍵盤(C7)を押しながら電源をONにしても「System Setup」の項目だけを工場出荷時の状態に戻すことができます。**

**MIDIのユーザー設定を工場出荷時の状態に戻しま**

**USER EFFECTを、工場出荷時の状態に戻します。**

**ミュージックファインダーのデータを工場出荷時の状態に戻します。**

**Userページに保存したすべてのファイル/フォルダーを消去します。**

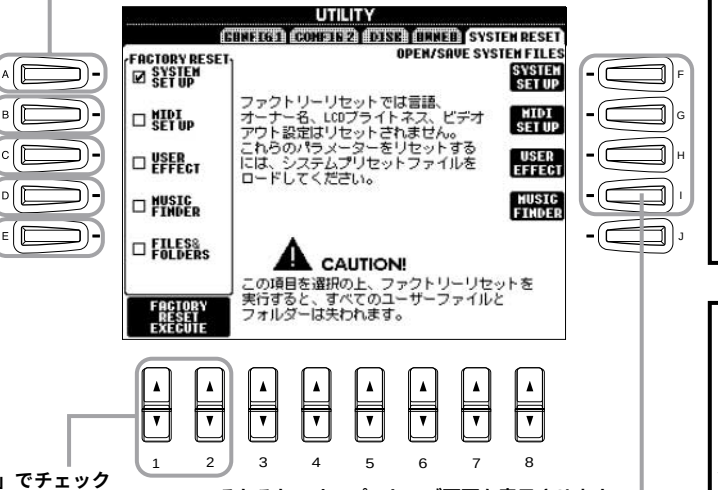


**「FACTORY RESET」でチェックマークを付けた項目を、工場出荷時の状態に戻します。**

**それぞれのオープンセーブ画面を表示させます。**
**SYSYTEM SETUP～MUSIC FINDERの設定をファイルとして保存します。保存したファイルは必要に応じて呼び出すことができます。それぞれの「PRESET」の中には工場出荷時のデータが入っていて、これを呼び出すとそれぞれの項目を工場出荷時の状態に戻すことができます(「FACTORY RESET」と同様)。**

**NOTE**

**以下の機能は、「SYSTEMSETUP」をリセットしても工場出荷時の状態に戻りません。**
- LANGUAGE
- OWNERNAME
- LCD BRIGHTNESS
- VIDEO OUT**関連項目**(NTSC/PAL、SIZE、CHARACTER COLOR BACKGROUND COLOR )

**ただし、「OPEN/SAVE SYSTEM FILES」で「SYSTEM SETUP」のプリセットファイルを呼び出すと、上記の機能を含むすべての機能を工場出荷時の状態に戻すことができます。**

**NOTE**

MUSIC FINDERを保存する場合は、全レコードがまとめて保存されます。保存したMUSIC FINDERファイルを呼び出すと、レコードの置き換え/追加を選ぶメッセージが表示されます。
**REPLACE**
**現在のミュージックファインダー全レコードが消去され、ファイルから呼び出されたレコードに置き替えられます。**
**APPEND**
**ファイルから呼び出されたレコードは、空きレコード番号に追加されます。**

# ■ MIDI IMPLEMENTATION CHART

YAMAHA [ Clavinova ] Date : 10 Sep,2002
Model CVP-206 MIDI Implementation Chart Version : 1.00
(Natural sound source)

| Function... | | Transmitted | Recognized | Remarks |
|---|---|---|---|---|
| Basic Channel | Default | 1 - 16 | 1 - 16 | |
| | Changed | 1 - 16 | 1 - 16 | |
| Mode | Default | 3 | 3 | |
| | Messages | X | X | |
| | Altered | ********** | X | |
| Note Number : True voice | | 0 - 127<br>********** | 0 - 127<br>0 - 127 | |
| Velocity | Note ON | O 9nH,v=1-127 | O 9nH,v=1-127 | |
| | Note OFF | X 9nH,v=0 | X | |
| After Touch | Key's | X | X | |
| | Ch's | X | X | |
| Pitch Bend | | O | O 0 - 24 semi | |
| Control Change | 0,32 | O | O | Bank Select |
| | 1,5 | X | X | |
| | 7,10,11 | O | O | |
| | 6,38 | O | O | Data Entry |
| | 64,66,67 | O | O | |
| | 65 | X | X | Portamento |
| | 71-74 | X | X | Sound Controller |
| | 84 | X | X | Portament Cntrl |
| | 91,93 | O | O | |
| | 94 | X | X | |
| | 96-97 | X | O | RPN Inc,Dec |
| | 98-99 | X | X | NRPN LSB,MSB |
| | 100-101 | O | O | RPN LSB,MSB |
| | 120 | X | O | All Sound Off |
| | 121 | X | O | Reset All Cntrls |
| Prog Change : True # | | O 0 - 127<br>********** | O 0 - 127 | |
| System Exclusive | | O | O | |
| Common : Song Pos. | | X | X | |
| : Song Sel. | | X | X | |
| : Tune | | X | X | |
| System : Clock | | O | O | |
| Real Time : Commands | | O | O | |
| : All Sound Off | | X | O (120,126-127) | |
| Aux : Reset All Cntrls | | X | O (121) | |
| : Local ON/OFF | | X | O | |
| Mes- : All Notes OFF | | X | O (123-125) | |
| sages: Active Sense | | O | O | |
| : Reset | | X | X | |
| Notes: | | | | |

Mode 1 : OMNI ON , POLY Mode 2 : OMNI ON ,MONO O: Yes
Mode 3 : OMNI OFF, POLY Mode 4 : OMNI OFF,MONO X: No

YAMAHA [ Clavinova ]
Model CVP-206 MIDI Implementation Chart
(XG sound source)

Date : 10 Sep,2002
Version : 1.00

| Function... | | Transmitted | Recognized | Remarks |
|---|---|---|---|---|
| Basic | Default | 1 - 16 | 1 - 16 | |
| Channel | Changed | 1 - 16 | 1 - 16 | |
| Mode | Default | 3 | 3 | |
| | Messages | x | x | |
| | Altered | ********** | x | |
| Note Number : True voice | | 0 - 127<br>********** | 0 - 127<br>0 - 127 | |
| Velocity | Note ON | o 9nH,v=1-127 | o 9nH,v=1-127 | |
| | Note OFF | x 9nH,v=0 | x | |
| After Touch | Key's | x | x | |
| | Ch's | x | o | |
| Pitch Bend | | o | o 0 - 24 semi | |
| Control Change | 0,32 | o | o | Bank Select |
| | 1,5,7,10,11 | o | o | |
| | 6,38 | o | o | Data Entry |
| | 64,65,66,67 | o | o | |
| | 71-74 | o | o | Sound Controller |
| | 84 | o | o | Portament Cntrl |
| | 91,93,94 | o | o | Effect Depth |
| | 96-97 | x | o | RPN Inc,Dec |
| | 98-99 | o | o | NRPN LSB,MSB |
| | 100-101 | o | o | RPN LSB,MSB |
| | 120 | x | o | All Sound Off |
| | 121 | x | o | Reset All Cntrls |
| Prog Change : True # | | o 0 - 127<br>********** | o 0 - 127 | |
| System Exclusive | | o | o | |
| Common : Song Pos. | | x | x | |
| : Song Sel. | | x | x | |
| : Tune | | x | x | |
| System : Clock | | o | o | |
| Real Time : Commands | | o | o | |
| : All Sound Off | | x | o (120,126-127) | |
| Aux : Reset All Cntrls | | x | o (121) | |
| : Local ON/OFF | | x | o | |
| Mes- : All Notes OFF | | x | o (123-125) | |
| sages: Active Sense | | o | o | |
| : Reset | | x | x | |
| Notes: | | | | |

Mode 1 : OMNI ON , POLY
Mode 2 : OMNI ON ,MONO
Mode 3 : OMNI OFF, POLY
Mode 4 : OMNI OFF,MONO

o: Yes
x: No

# ■ MIDI DATA FORMAT

To enter data/values, refer to the table below.

| Decimal | Hexadecimal | Binary | Decimal | Hexadecimal | Binary | Decimal | Hexadecimal | Binary | Decimal | Hexadecimal | Binary |
|---|---|---|---|---|---|---|---|---|---|---|---|
| 0 | 00 | 0000 0000 | 32 | 20 | 0010 0000 | 64 | 40 | 0100 0000 | 96 | 60 | 0110 0000 |
| 1 | 01 | 0000 0001 | 33 | 21 | 0010 0001 | 65 | 41 | 0100 0001 | 97 | 61 | 0110 0001 |
| 2 | 02 | 0000 0010 | 34 | 22 | 0010 0010 | 66 | 42 | 0100 0010 | 98 | 62 | 0110 0010 |
| 3 | 03 | 0000 0011 | 35 | 23 | 0010 0011 | 67 | 43 | 0100 0011 | 99 | 63 | 0110 0011 |
| 4 | 04 | 0000 0100 | 36 | 24 | 0010 0100 | 68 | 44 | 0100 0100 | 100 | 64 | 0110 0100 |
| 5 | 05 | 0000 0101 | 37 | 25 | 0010 0101 | 69 | 45 | 0100 0101 | 101 | 65 | 0110 0101 |
| 6 | 06 | 0000 0110 | 38 | 26 | 0010 0110 | 70 | 46 | 0100 0110 | 102 | 66 | 0110 0110 |
| 7 | 07 | 0000 0111 | 39 | 27 | 0010 0111 | 71 | 47 | 0100 0111 | 103 | 67 | 0110 0111 |
| 8 | 08 | 0000 1000 | 40 | 28 | 0010 1000 | 72 | 48 | 0100 1000 | 104 | 68 | 0110 1000 |
| 9 | 09 | 0000 1001 | 41 | 29 | 0010 1001 | 73 | 49 | 0100 1001 | 105 | 69 | 0110 1001 |
| 10 | 0A | 0000 1010 | 42 | 2A | 0010 1010 | 74 | 4A | 0100 1010 | 106 | 6A | 0110 1010 |
| 11 | 0B | 0000 1011 | 43 | 2B | 0010 1011 | 75 | 4B | 0100 1011 | 107 | 6B | 0110 1011 |
| 12 | 0C | 0000 1100 | 44 | 2C | 0010 1100 | 76 | 4C | 0100 1100 | 108 | 6C | 0110 1100 |
| 13 | 0D | 0000 1101 | 45 | 2D | 0010 1101 | 77 | 4D | 0100 1101 | 109 | 6D | 0110 1101 |
| 14 | 0E | 0000 1110 | 46 | 2E | 0010 1110 | 78 | 4E | 0100 1110 | 110 | 6E | 0110 1110 |
| 15 | 0F | 0000 1111 | 47 | 2F | 0010 1111 | 79 | 4F | 0100 1111 | 111 | 6F | 0110 1111 |
| 16 | 10 | 0001 0000 | 48 | 30 | 0011 0000 | 80 | 50 | 0101 0000 | 112 | 70 | 0111 0000 |
| 17 | 11 | 0001 0001 | 49 | 31 | 0011 0001 | 81 | 51 | 0101 0001 | 113 | 71 | 0111 0001 |
| 18 | 12 | 0001 0010 | 50 | 32 | 0011 0010 | 82 | 52 | 0101 0010 | 114 | 72 | 0111 0010 |
| 19 | 13 | 0001 0011 | 51 | 33 | 0011 0011 | 83 | 53 | 0101 0011 | 115 | 73 | 0111 0011 |
| 20 | 14 | 0001 0100 | 52 | 34 | 0011 0100 | 84 | 54 | 0101 0100 | 116 | 74 | 0111 0100 |
| 21 | 15 | 0001 0101 | 53 | 35 | 0011 0101 | 85 | 55 | 0101 0101 | 117 | 75 | 0111 0101 |
| 22 | 16 | 0001 0110 | 54 | 36 | 0011 0110 | 86 | 56 | 0101 0110 | 118 | 76 | 0111 0110 |
| 23 | 17 | 0001 0111 | 55 | 37 | 0011 0111 | 87 | 57 | 0101 0111 | 119 | 77 | 0111 0111 |
| 24 | 18 | 0001 1000 | 56 | 38 | 0011 1000 | 88 | 58 | 0101 1000 | 120 | 78 | 0111 1000 |
| 25 | 19 | 0001 1001 | 57 | 39 | 0011 1001 | 89 | 59 | 0101 1001 | 121 | 79 | 0111 1001 |
| 26 | 1A | 0001 1010 | 58 | 3A | 0011 1010 | 90 | 5A | 0101 1010 | 122 | 7A | 0111 1010 |
| 27 | 1B | 0001 1011 | 59 | 3B | 0011 1011 | 91 | 5B | 0101 1011 | 123 | 7B | 0111 1011 |
| 28 | 1C | 0001 1100 | 60 | 3C | 0011 1100 | 92 | 5C | 0101 1100 | 124 | 7C | 0111 1100 |
| 29 | 1D | 0001 1101 | 61 | 3D | 0011 1101 | 93 | 5D | 0101 1101 | 125 | 7D | 0111 1101 |
| 30 | 1E | 0001 1110 | 62 | 3E | 0011 1110 | 94 | 5E | 0101 1110 | 126 | 7E | 0111 1110 |
| 31 | 1F | 0001 1111 | 63 | 3F | 0011 1111 | 95 | 5F | 0101 1111 | 127 | 7F | 0111 1111 |

- Except the table above, for example 144-159(decimal)/9nH/1001 0000-1001 1111(binary) denotes the Note On Message for each channel (1-16). 176-191/BnH/1011 0000-1011 1111 denotes the Control Change Message for each channel (1-16). 192-207/CnH/1100 0000-1100 1111 denotes the Program Change Message for each channel (1-16). 240/FOH/1111 0000 denotes the start of a System Exclusive Message. 247/F7H/1111 0111 denotes the end of a System Exclusive Message.
- aaH (hexidecimal)/0aaaaaaa (binary) denotes the data address. The address contains High, Mid, and Low.
- bbH/0bbbbbbb denotes the byte count.
- ccH/0ccccccc denotes the check sum.
- ddH/0ddddddd denotes the data/value.

O: available

| | CVP-210 | CVP-208 | CVP-206 | CVP-204 |
|---|---|---|---|---|
| Regular Voice | O | O | O | O |
| Organ (Organ Flutes) Voice | O | O | - | - |
| Mic | O | O | O | - |
| Vocal Harmony | O | O | - | - |
| Natural Voice | O | O | O | O |

# MIDI CHANNEL MESSAGE (1)

O: available

| MIDI Events | Status byte | | 1st Data byte | | | 2nd Data byte | | | Corresponding Voice/Part | | | MIDI Reception (respond/ignore) | | | | | MIDI Transmission (generated data) | | | | |
|---|---|---|---|---|---|---|---|---|---|---|---|---|---|---|---|---|---|---|---|---|---|
| | Status | | Data | (HEX) | Parameter | Data | (HEX) | Parameter | Regular/ Organ Voice | Mic/Vocal Harmony | Natural Voice | Song | Main Layer Left | Keyboard | Style | Extra | Panel (main generation method) | Upper Lower | Style | Song | MIDI |
| Key Off | 8nH | (n: Channel Number) | kk | | Key no. (0 – 127) | vv | | Velocity (0 – 127) | O | O (Harmony Channel/ Melody Channel) | O | O | O | O | O | O | X | X | X | O | X |
| Key On | 9nH | (n: Channel Number) | kk | | Key no. (0 – 127) | vv | | Key On: vv=1 – 127 Key Off: vv=0 | O | O (Harmony Channel/ Melody Channel) | O | O | O | O | O | O | O (Keyboard) | O | O | O | X |
| Control Change | BnH | (n: Channel Number) | 0 | (00H) | Bank Select MSB | 0<br>64<br>126<br>127 | (00H)<br>(40H)<br>(7EH)<br>(7FH) | Normal<br>SFX voice<br>SFX kit<br>Drum kit | O | X | O | O | O | O (Main) | O | O | O (Voice) | X | O | O | X |
| | | | 1 | (01H) | Modulation | 0 – 127 | (00H – 7FH) | Data | O | X | X | O | O | O (Main/Layer/ Left) | O | O | O (Pedal) | O | O | O | X |
| | | | 5 | (05H) | Portamento Time | 0 – 127 | (00H – 7FH) | Data | O | X | X | O | O | O (Main/Layer/ Left) | X | O | O (Mixing Console) | X | X | O | X |
| | | | 6 | (06H) | Data Entry MSB | 0 – 127 | (00H – 7FH) | Data | O | O (Harmony Channel/ Melody Channel) | O | O | O | O (Main/Layer/ Left) | O | O | O (Mixing Console) | X | O | O | X |
| | | | 7 | (07H) | Main Volume | 0 – 127 | (00H – 7FH) | Data | O | O (Mic) | O | O | O | O (Main/Layer/ Left) | O | O | O (Mixing Console) | X | O | O | X |
| | | | 10 | (0AH) | Panpot | 0 – 127 | (00H – 7FH) | L64 – C – R63 | O | O (Mic) | O | O | O | O (Main/Layer/ Left) | O | O | O (Mixing Console) | X | O | O | X |
| | | | 11 | (0BH) | Expression | 0 – 127 | (00H – 7FH) | Data | O | X | O | O | O | O (Main/Layer/ Left) | O | O | O (Pedal) | O | O | O | X |
| | | | 32 | (20H) | Bank Select LSB | 0 – 127 | (00H – 7FH) | Data | O | X | O | O | O | O (Main) | O | O | O (Voice) | X | O | O | X |
| | | | 38 | (26H) | Data Entry LSB | 0 – 127 | (00H – 7FH) | Data | O | O (Harmony Channel/ Melody Channel) | O | O | O | O (Main/Layer/ Left) | X | O | O (Mixing Console) | X | X | O | X |
| | | | 64 | (40H) | Sustain (Damper) | 0 – 127 | (00H – 7FH) | Data | O | O (Harmony Channel/ Melody Channel) | O | O | O | O (Main/Layer/ Left) | X | O | O (Pedal) | O | X | O | X |
| | | | 65 | (41H) | Portamento | 0 – 127 | (00H – 7FH) | 0 – 63, 64 – 127 (OFF, ON) | O | X | X | O | O | O (Main/Layer/ Left) | X | O | O (Poly/Mono Sw) | O | X | O | X |
| | | | 66 | (42H) | Sostenuto | 0 – 127 | (00H – 7FH) | 0 – 63, 64 – 127 (OFF, ON) | O | X | O | O | O | O (Main/Layer/ Left) | X | O | O (Pedal) | O | X | O | X |
| | | | 67 | (43H) | Soft Pedal | 0 – 127 | (00H – 7FH) | 0 – 63, 64 – 127 (OFF, ON) | O | X | O | O | O | O (Main/Layer/ Left) | X | O | O (Pedal) | O | X | O | X |
| | | | 71 | (47H) | Harmonic Content | 0 – 127 | (00H – 7FH) | -64 – 0 – +63 | O | X | X | O | O | O (Main/Layer/ Left) | O | O | O (Mixing Console) | X | O | O | X |
| | | | 72 | (48H) | Release Time | 0 – 127 | (00H – 7FH) | -64 – 0 – +63 | O | X | X | O | O | O (Main/Layer/ Left) | O | O | O (Sound Creator) | X | O | O | X |
| | | | 73 | (49H) | Attack Time | 0 – 127 | (00H – 7FH) | -64 – 0 – +63 | O | X | X | O | O | O (Main/Layer/ Left) | O | O | O (Sound Creator) | X | O | O | X |
| | | | 74 | (4AH) | Brightness | 0 – 127 | (00H – 7FH) | -64 – 0 – +63 | O | X | X | O | O | O (Main/Layer/ Left) | X | O | O (Sound Creator) | X | O | O | X |
| | | | 84 | (54H) | Portamento Control | 0 – 127 | (00H – 7FH) | Key no. (0 – 127) | O | X | X | O | O | X | O | O | O (Auto Accompaniment) | X | X | O | X |
| | | | 91 | (5BH) | Effect1 Depth (Reverb Send Level) | 0 – 127 | (00H – 7FH) | Data | O | O (Mic) | O | O | O | O (Main/Layer/ Left) | O | O | O (Mixing Console) | X | O | O | X |
| | | | 93 | (5DH) | Effect3 Depth (Chorus Send Level) | 0 – 127 | (00H – 7FH) | Data | O | O (Mic) | O | O | O | O (Main/Layer/ Left) | O | O | O (Mixing Console) | X | O | O | X |
| | | | 94 | (5EH) | Effect4 Depth (Variation Send Level) | 0 – 127 | (00H – 7FH) | Data | O | O (Mic) | X | O | O | O (Main/Layer/ Left) | O | O | O (Mixing Console) | X | O | O | X |
| | | | 96 | (60H) | RPN Increment | - | - | *1 | O | O (Harmony Channel/ Melody Channel) | O | O | O | X | O | O | X | X | X | O | X |
| | | | 97 | (61H) | RPN Decrement | - | - | *1 | O | O (Harmony Channel/ Melody Channel) | O | O | O | X | O | O | X | X | X | O | X |
| | | | 98 | (62H) | NRPN LSB | 0 – 127 | (00H – 7FH) | Data | O | O (Harmony Channel/ Melody Channel) | X | O | O | X | O | O | O (Sound Creator) | X | O | O | X |
| | | | 99 | (63H) | NRPN MSB | 0 – 127 | (00H – 7FH) | Data | O | O (Harmony Channel/ Melody Channel) | X | O | O | X | O | O | O (Sound Creator) | X | O | O | X |
| | | | 100 | (64H) | RPN LSB | 0 – 127 | (00H – 7FH) | Data | O | O (Harmony Channel/ Melody Channel) | O | O | O | O (Main/Layer/ Left) | O | O | O (Mixing Console) | X | O | O | X |
| | | | 101 | (65H) | RPN MSB | 0 – 127 | (00H – 7FH) | Data | O | O (Harmony Channel/ Melody Channel) | O | O | O | O (Main/Layer/ Left) | O | O | O (Mixing Console) | X | O | O | X |
| Mode Message | BnH | (n: Channel Number) | 120 | (78H) | All Sound Off | 0 | (00H) | Data | O | X | O | O | O | O (Main/Layer/ Left) | O | O | X | X | X | O | X |
| | | | 121 | (79H) | Reset All Controllers | 0 | (00H) | Data | O | X | O | O | X | X | X | X | X | X | X | O | X |
| | | | 122 | (7AH) | Local Control | 0<br>127 | (00H)<br>(7FH) | OFF<br>ON | - | - | - | O | O | O | O | O | X | X | X | X | X |
| | | | 123 | (7BH) | All Note Off | 0 | (00H) | Data | O | O (Harmony Channel/ Melody Channel) | O | O | O | O (Main/Layer/ Left) | O | O | X | X | X | O | X |
| | | | 124 | (7CH) | Omni Off | 0 | (00H) | Data | O | X | X | O | X | X | X | X | X | X | X | O | X |
| | | | 125 | (7DH) | Omni On | 0 | (00H) | Data | O | X | X | O | X | X | X | X | X | X | X | O | X |
| | | | 126 | (7EH) | Mono | 0 – 16 | (00H – 10H) | Data | O | X | X | O | X | X | X | X | X | X | X | O | X |
| | | | 127 | (7FH) | Poly | 0 | (00H) | Data | O | X | X | O | X | X | X | X | X | X | X | O | X |

| MIDI Events | Status byte | | 1st Data byte | | 2nd Data byte | | Corresponding Voice/Part | | | MIDI Reception (respond/ignore) | | | | | MIDI Transmission (generated data) | | | | |
|---|---|---|---|---|---|---|---|---|---|---|---|---|---|---|---|---|---|---|---|
| | Status | | Data (HEX) | Parameter | Data (HEX) | Parameter | Regular/ Organ Voice | Mic/Vocal Harmony | Natural Voice | Song | Main Layer Left | Keyboard | Style | Extra | Panel (main generation method) | Upper Lower | Style | Song | MIDI |
| Program Change | CnH | (n: Channel Number) | pp (00H – 7FH) | Voice Number (0 – 127) | - - | - | O | X | O | O | O | O (Main) | O | O | O (Voice) | X | O | O | X |
| Channel After Touch | DnH | (n: Channel Number) | vv (00H – 7FH) | Data | - - | - | O | X | X | O | O | O (Main/Layer/ Left) | X | O | X | X | X | O | X |
| Polyphonic After Touch | AnH | (n: Channel Number) | kk (00H – 7FH) | Key no. (0 – 127) | vv (00H – 7FH) | Data | X | X | X | X | X | X | X | X | X | X | X | O | X |
| Pitch Bend Change | EnH | (n: Channel Number) | cc (00H – 7FH) | LSB | dd (00H – 7FH) | MSB | O | O (Harmony Channel/ Melody Channel) | O | O | O | O (Main/Layer/ Left) | O | O | O (Pedal) | O | O | O | X |
| Realtime Message | F8H | MIDI Clock | - | - | - | - | - | - | - | O (*2) | | | | | O (*3) | | | | |
| | FAH | Start | - | - | - | - | - | - | - | O (*2) | | | | | O (*4) | | | | |
| | FBH | Continue | - | - | - | - | - | - | - | X | | | | | X | | | | |
| | FCH | Stop | - | - | - | - | - | - | - | O (*2) | | | | | O (*4) | | | | |
| | FEH | Active Sens | - | - | - | - | - | - | - | O | | | | | O | | | | |
| | FFH | System Reset | - | - | - | - | - | - | - | X | | | | | X | | | | |

*1 The data byte is ignored.
*2 Received when the Clock is set to External.
*3 Transmitted when the Clock is set to Internal and Transmit Clock is set to on.
*4 Transmitted when the Transmit Clock is set to on.

About Mic/Vocal Harmony column:
The relevant parameters are received by the song part designated by the Effect's Harmony Channel Parameter or Melody Parameter.

# MIDI CHANNEL MESSAGE (2)

## NRPN

| NRPN | | Data Entry | | Parameter | Data Range | Corresponding Voice/Part | | | MIDI Reception (respond/ignore) | | | | | MIDI Transmission (generated data) | | | | |
|---|---|---|---|---|---|---|---|---|---|---|---|---|---|---|---|---|---|---|
| MSB | LSB | MSB | LSB | | | Regular/ Organ Voice | Mic/Vocal Harmony | Natural Voice | Song | Main Layer Left | Keyboard | Style | Extra | Panel (main generation method) | Upper Lower | Style | Song | MIDI |
| 01H | 08H | mmH | -- | Vibrato Rate | mm: 00H – 40H – 7FH (-64 – 0 – +63) | O | O (Harmony Channel/ Melody Channel) | X | O | O | X | O | O | O (Sound Creator) | X | O | O | X |
| 01H | 09H | mmH | -- | Vibrato Depth | mm: 00H – 40H – 7FH (-64 – 0 – +63) | O | O (Harmony Channel/ Melody Channel) | X | O | O | X | O | O | O (Sound Creator) | X | O | O | X |
| 01H | 0AH | mmH | -- | Vibrato Delay | mm: 00H – 40H – 7FH (-64 – 0 – +63) | O | O (Harmony Channel/ Melody Channel) | X | O | O | X | O | O | O (Sound Creator) | X | O | O | X |
| 01H | 20H | mmH | -- | Low Pass Filter Cutoff Frequency | mm: 00H – 40H – 7FH (-64 – 0 – +63) | O | X | X | O | X | X | O | X | X | X | X | O | X |
| 01H | 21H | mmH | -- | Low Pass Filter Resonance | mm: 00H – 40H – 7FH (-64 – 0 – +63) | O | X | X | O | X | X | O | X | X | X | X | O | X |
| 01H | 30H | mmH | -- | EQ BASS (*1) | mm: 00H – 40H – 7FH (-64 – 0 – +63) | O | X | X | O | X | X | O | X | X | X | X | O | X |
| 01H | 31H | mmH | -- | EQ TREBLE (*1) | mm: 00H – 40H – 7FH (-64 – 0 – +63) | O | X | X | O | X | X | O | X | X | X | X | O | X |
| 01H | 34H | mmH | -- | EQ BASS Frequency (*1) | mm: 04H – 28H (32 – 2.0k[Hz]) | O | X | X | O | X | X | X | X | X | X | X | O | X |
| 01H | 35H | mmH | -- | EQ TREBLE Frequency (*1) | mm: 1CH – 3AH (500 – 16.0k[Hz]) | O | X | X | O | X | X | X | X | X | X | X | O | X |
| 01H | 63H | mmH | -- | EG Attack Time | mm: 00H – 40H – 7FH (-64 – 0 – +63) | O | X | X | O | X | X | O | X | X | X | X | O | X |
| 01H | 64H | mmH | -- | EG Decay Time | mm: 00H – 40H – 7FH (-64 – 0 – +63) | O | X | X | O | O | X | O | O | O (Sound Creator) | X | O | O | X |
| 01H | 66H | mmH | -- | EG Release | mm: 00H – 40H – 7FH (-64 – 0 – +63) | O | X | X | O | X | X | O | X | X | X | X | O | X |
| 14H | rrH | mmH | -- | Drum Low Pass Filter Cutoff Frequency | rr: drum instrument note number mm: 00H – 40H – 7FH (-64 – 0 – +63) | O (Drum Only) | X | X | O | X | X | X | X | X | X | X | O | X |
| 15H | rrH | mmH | -- | Drum Low Pass Filter Resonance | rr: drum instrument note number mm: 00H – 40H – 7FH (-64 – 0 – +63) | | X | X | O | X | X | X | X | X | X | X | O | X |
| 16H | rrH | mmH | -- | Drum EG Attack Rate | rr: drum instrument note number mm: 00H – 40H – 7FH (-64 – 0 – +63) | | X | X | O | X | X | X | X | X | X | X | O | X |
| 17H | rrH | mmH | -- | Drum EG Decay Rate | rr: drum instrument note number mm: 00H – 40H – 7FH (-64 – 0 – +63) | | X | X | O | X | X | X | X | X | X | X | O | X |
| 18H | rrH | mmH | -- | Drum Pitch Coarse | rr: drum instrument note number mm: 00H – 40H – 7FH (-64 – 0 – +63) | | X | X | O | X | X | X | X | X | X | X | O | X |
| 19H | rrH | mmH | -- | Drum Pitch Fine | rr: drum instrument note number mm: 00H – 40H – 7FH (-64 – 0 – +63) | | X | X | O | X | X | X | X | X | X | X | O | X |
| 1AH | rrH | mmH | -- | Drum Level | rr: drum instrument note number mm: 00H – 7FH (0 – 127) | | X | X | O | X | X | X | X | X | X | X | O | X |
| 1CH | rrH | mmH | -- | Drum Pan | rr: drum instrument note number mm: 00H, 01H – 40H – 7FH (RND, L63 – C – R63) | | X | X | O | X | X | X | X | X | X | X | O | X |
| 1DH | rrH | mmH | -- | Drum Reverb Send Level | rr: drum instrument note number mm: 00H – 7FH (0 – 127) | | X | X | O | X | X | X | X | X | X | X | O | X |
| 1EH | rrH | mmH | -- | Drum Chorus Send Level | rr: drum instrument note number mm: 00H – 7FH (0 – 127) | | X | X | O | X | X | X | X | X | X | X | O | X |
| 1FH | rrH | mmH | -- | Drum Variation Send Level | rr: drum instrument note number mm: 00H – 7FH (0 – 127) (Variation Connection=SYSTEM) mm: 00H, 01H – 7FH (OFF, ON) (Variation Connection= INSERTION) | | X | X | O | X | X | X | X | X | X | X | O | X |

NRPN MSB: 14H – 1FH (for drums) message is accepted as long as the channel is set with a drum voice.
Data Entry LSB: Ignored.

## NRPN (Vocal Harmony)

| NRPN | | Data Entry | | Parameter | Data Range | Corresponding Voice/Part | | | MIDI Reception (respond/ignore) | | | | | MIDI Transmission (generated data) | | | | |
|---|---|---|---|---|---|---|---|---|---|---|---|---|---|---|---|---|---|---|
| MSB | LSB | MSB | LSB | | | Regular/ Organ Voice | Mic/Vocal Harmony | Natural Voice | Song | Main Layer Left | Keyboard | Style | Extra | Panel (main generation method) | Upper Lower | Style | Song | MIDI |
| 00H | 00H | mmH | -- | Harmony Mute (*1) | 0 – 63, 64 – 127 (Off, On) | X | O (Harmony Channel) | X | X | X | X | X | X | X | X | X | O | X |
| 01H | 1AH | mmH | -- | Detune Modulation (*1) | mm: 00H – 7FH (0 – 127) | X | O (Harmony Channel) | X | X | X | X | X | X | X | X | X | O | X |
| 02H | 10H | mmH | -- | Harmony1 Volume (*1) | mm: 00H – 7FH (0 – 127) | X | O (Harmony Channel) | X | X | X | X | X | X | O (Vocal Harmony Type Edit) | X | X | O | X |
| 02H | 11H | mmH | -- | Harmony2 Volume (*1) | mm: 00H – 7FH (0 – 127) | X | O (Harmony Channel) | X | X | X | X | X | X | O (Vocal Harmony Type Edit) | X | X | O | X |
| 02H | 12H | mmH | -- | Harmony3 Volume (*2) | mm: 00H – 7FH (0 – 127) | X | O (Harmony Channel) | X | X | X | X | X | X | O (Vocal Harmony Type Edit) | X | X | O | X |
| 02H | 20H | mmH | -- | Harmony1 Pan (*1) | mm: 00H, 01H – 40H – 7FH (RND, L63 – C – R63) | X | O (Harmony Channel) | X | X | X | X | X | X | O (Vocal Harmony Type Edit) | X | X | O | X |
| 02H | 21H | mmH | -- | Harmony2 Pan (*1) | mm: 00H, 01H – 40H – 7FH (RND, L63 – C – R63) | X | O (Harmony Channel) | X | X | X | X | X | X | O (Vocal Harmony Type Edit) | X | X | O | X |
| 02H | 22H | mmH | -- | Harmony3 Pan (*2) | mm: 00H, 01H – 40H – 7FH (RND, L63 – C – R63) | X | O (Harmony Channel) | X | X | X | X | X | X | O (Vocal Harmony Type Edit) | X | X | O | X |
| 02H | 30H | mmH | -- | Harmony1 Detune (*1) | mm: 00H – 40H – 7FH (-64 – 0 – +63) | X | O (Harmony Channel) | X | X | X | X | X | X | O (Vocal Harmony Type Edit) | X | X | O | X |
| 02H | 31H | mmH | -- | Harmony2 Detune (*1) | mm: 00H – 40H – 7FH (-64 – 0 – +63) | X | O (Harmony Channel) | X | X | X | X | X | X | O (Vocal Harmony Type Edit) | X | X | O | X |
| 02H | 32H | mmH | -- | Harmony3 Detune (*2) | mm: 00H – 40H – 7FH (-64 – 0 – +63) | X | O (Harmony Channel) | X | X | X | X | X | X | O (Vocal Harmony Type Edit) | X | X | O | X |

Data Entry LSB: Ignored.

## RPN

| NRPN | | Data Entry | | Parameter | Data Range | Corresponding Voice/Part | | | MIDI Reception (respond/ignore) | | | | | MIDI Transmission (generated data) | | | | |
|---|---|---|---|---|---|---|---|---|---|---|---|---|---|---|---|---|---|---|
| MSB | LSB | MSB | LSB | | | Regular/ Organ Voice | Mic/Vocal Harmony | Natural Voice | Song | Main Layer Left | Keyboard | Style | Extra | Panel (main generation method) | Upper Lower | Style | Song | MIDI |
| 00H | 00H | mmH | -- | Pitch Bend Sensitivity | mm: 00H – 18H (0 – +24[semitones]) | O | O (Harmony Channel/ Melody Channel) | O | O | O | O (Main/ Layer/ Left) | O | O | O (Mixing Console) | X | O | O | X |
| 00H | 01H | mmH | llH | Fine Tune | mm ll : 00H 00H -100[cent]<br>...<br>mm ll : 40H 00H 0[cent]<br>...<br>mm ll : 7FH 7FH 100[cent] | O | X | O | O | O | O (Main/ Layer/ Left) | O | O | O (Mixing Console) | X | O | O | X |
| 00H | 02H | mmH | -- | Coarse Tune | mm: 28H – 40H – 58H (-24 – 0 – +24[semitones]) | O | X | O | O | O | O (Main/ Layer/ Left) | O | O | X | X | O | O | X |
| 7FH | 7FH | -- | -- | Null | - | O | O | O | O | O | O (Main/ Layer/ Left) | O | O | X | X | O | O | X |

*1 CVP-210/208 only
*2 CVP-210 only

About Mic/Vocal Harmony column:
The relevant parameters are received by the song part designated by the Effect's Harmony Channel Parameter or Melody Parameter.

# MIDI PARAMETER CHANGE TABLE

* Not Received when Receive System Exclusive Message Parameters is set to off.
* Not transmitted when Transmit System Exclusive Message Parameters is set to off.

## MIDI Parameter Change table (XG SYSTEM)

O: available

| Address (H) | | | Size (H) | Data (H) | Parameter | Description | XG Default (H) | Corresponding Voice/Part | | | MIDI Reception (effective or not for each part) | | | | | MIDI Transmission (generated data) | | | |
|---|---|---|---|---|---|---|---|---|---|---|---|---|---|---|---|---|---|---|---|
| | | | | | | | | Regular/ Organ Voice | Mic/Vocal Harmony | Natural Voice | Song | Main Layer Left | Keyboard | Style | Extra | Panel (main generation method) | Style | Song | MIDI |
| 00 | 00 | 00 | 4 | 00 – 0F | MASTER TUNE | -102.4 – 0 – +102.3[cent] | *Panel setting value | O | X | O | O | | | | | O (Function) | X | O | X |
| | | 01 | | 00 – 0F | | 1st bit 3-0→bit 15-12 | | | | | | | | | | | | | |
| | | 02 | | 00 – 0F | | 2nd bit 3-0→bit 11-8 | | | | | | | | | | | | | |
| | | 03 | | 00 – 0F | | 3rd bit 3-0→bit 7-4 | | | | | | | | | | | | | |
| | | | | | | 4th bit 3-0→bit 3-0 | | | | | | | | | | | | | |
| | | 04 | 1 | 00 – 7F | MASTER VOLUME | 0 – 127 | 7F | O | X | O | O | X | X | X | X | X | X | O | X |
| | | 05 | 1 | 00 – 7F | MASTER ATTENUATOR | 0 – 127 | 00 | X | X | X | X | X | X | X | X | X | X | X | X |
| | | 06 | 1 | 28 – 58 | TRANSPOSE | -24 – 0 – +24[semitones] | 40 | O | X | O | O | X | X | X | X | X | X | O | X |
| | | 7D | 1 | N | DRUM SETUP RESET | N: Drum setup number | - | O (Drum only) | X | X | O | X | X | X | X | X | X | O | X |
| | | 7E | 1 | 00 | XG SYSTEM ON | 00=XG system ON | - | O | X | O | O | X | X | X | O | X | X | O | X |
| | | 7F | 1 | 00 | ALL PARAMETER RESET | 00=ON | - | O | X | O | O | X | X | X | O | X | X | O | X |

TOTAL SIZE 07

## MIDI Parameter Change table (SYSTEM INFORMATION)

| Address (H) | | | Size (H) | Data (H) | Parameter | Description | Corresponding Voice/Part | | | MIDI Reception (effective or not for each part) | | | | | MIDI Transmission (generated data) | | | |
|---|---|---|---|---|---|---|---|---|---|---|---|---|---|---|---|---|---|---|
| | | | | | | | Regular/Organ Voice | Mic/Vocal Harmony | Natural Voice | Song | Main Layer Left | Keyboard | Style | Extra | Panel (main generation method) | Style | Song | MIDI |
| 01 | 00 | 00 | E | 20 – 7F | Model Name 1 | 32 – 127 (ASCII CHARACTER) | - | - | - | - | - | - | - | - | X | X | X | O |
| | | ... | | ... | ... | ... | | | | | | | | | | | | |
| | | 0D | | 20 – 7F | Model Name 14 | 32 – 127 (ASCII CHARACTER) | | | | | | | | | | | | |
| | | 0E | 1 | | NOT USED | | | | | | | | | | | | | |
| | | 0F | 1 | | NOT USED | | | | | | | | | | | | | |

TOTAL SIZE 10

Transmitted in response to Dump Request. Not received.

## MIDI Parameter Change table (EFFECT1)

| Address (H) | | | Size (H) | Data (H) | Parameter | Description | XG Default (H) | Corresponding Voice/Part | | | MIDI Reception (effective or not for each part) | | | | | MIDI Transmission (generated data) | | | |
|---|---|---|---|---|---|---|---|---|---|---|---|---|---|---|---|---|---|---|---|
| | | | | | | | | Regular/ Organ Voice | Mic/Vocal Harmony | Natural Voice | Song | Main Layer Left | Keyboard | Style | Extra | Panel (main generation method) | Style | Song | MIDI |
| 02 | 01 | 00 | 2 | 00 – 7F | REVERB TYPE MSB | Refer to Effect Parameter List | 01 (=HALL1) | O | O | X | O | | | | | O (Mixing Console) | O | O | X |
| | | | | 00 – 7F | REVERB TYPE LSB | 〃 | 00 | | | | | | | | | | | | |
| | | 02 | 1 | 00 – 7F | REVERB PARAMETER 1 | 〃 | Depends on Reverb Type | O | O | X | O (*Depends on Reverb Type) | | | | | O (Mixing Console | O | O | X |
| | | 03 | 1 | 00 – 7F | REVERB PARAMETER 2 | 〃 | Depends on Reverb Type | O | O | X | O (*Depends on Reverb Type) | | | | | O (Mixing Console *Depends on Reverb Type) | O | O | X |
| | | 04 | 1 | 00 – 7F | REVERB PARAMETER 3 | 〃 | Depends on Reverb Type | O | O | X | O (*Depends on Reverb Type) | | | | | O (Mixing Console *Depends on Reverb Type) | O | O | X |
| | | 05 | 1 | 00 – 7F | REVERB PARAMETER 4 | 〃 | Depends on Reverb Type | O | O | X | O (*Depends on Reverb Type) | | | | | O (Mixing Console *Depends on Reverb Type) | O | O | X |
| | | 06 | 1 | 00 – 7F | REVERB PARAMETER 5 | 〃 | Depends on Reverb Type | O | O | X | O (*Depends on Reverb Type) | | | | | O (Mixing Console *Depends on Reverb Type) | O | O | X |
| | | 07 | 1 | 00 – 7F | REVERB PARAMETER 6 | 〃 | Depends on Reverb Type | O | O | X | O (*Depends on Reverb Type) | | | | | O (Mixing Console *Depends on Reverb Type) | O | O | X |
| | | 08 | 1 | 00 – 7F | REVERB PARAMETER 7 | 〃 | Depends on Reverb Type | O | O | X | O (*Depends on Reverb Type) | | | | | O (Mixing Console *Depends on Reverb Type) | O | O | X |
| | | 09 | 1 | 00 – 7F | REVERB PARAMETER 8 | 〃 | Depends on Reverb Type | O | O | X | O (*Depends on Reverb Type) | | | | | O (Mixing Console *Depends on Reverb Type) | O | O | X |
| | | 0A | 1 | 00 – 7F | REVERB PARAMETER 9 | 〃 | Depends on Reverb Type | O | O | X | O (*Depends on Reverb Type) | | | | | O (Mixing Console *Depends on Reverb Type) | O | O | X |
| | | 0B | 1 | 00 – 7F | REVERB PARAMETER 10 | 〃 | Depends on Reverb Type | O | O | X | O (*Depends on Reverb Type) | | | | | O (Mixing Console *Depends on Reverb Type) | O | O | X |
| | | 0C | 1 | 00 – 7F | REVERB RETURN | -∞dB – 0dB – +6dB (0 – 96 – 127) | 40 | O | O | X | O | | | | | O (Mixing Console) | O | O | X |
| | | 0D | 1 | 01 – 7F | REVERB PAN | L63 – C – R63 | 40 | O | O | X | O | | | | | X | O | O | X |

TOTAL SIZE 0E

| Address (H) | | | Size (H) | Data (H) | Parameter | Description | XG Default (H) | Corresponding Voice/Part | | | MIDI Reception (effective or not for each part) | | | | | MIDI Transmission (generated data) | | | |
|---|---|---|---|---|---|---|---|---|---|---|---|---|---|---|---|---|---|---|---|
| | | | | | | | | Regular/ Organ Voice | Mic/Vocal Harmony | Natural Voice | Song | Main Layer Left | Keyboard | Style | Extra | Panel (main generation method) | Style | Song | MIDI |
| 02 | 01 | 10 | 1 | 00 – 7F | REVERB PARAMETER 11 | Refer to Effect Parameter List | Depends on Reverb Type | O | O | X | O (*Depends on Reverb Type) | | | | | O (Mixing Console *Depends on Reverb Type) | O | O | X |
| | | 11 | 1 | 00 – 7F | REVERB PARAMETER 12 | 〃 | Depends on Reverb Type | O | O | X | O (*Depends on Reverb Type) | | | | | O (Mixing Console *Depends on Reverb Type) | O | O | X |
| | | 12 | 1 | 00 – 7F | REVERB PARAMETER 13 | 〃 | Depends on Reverb Type | O | O | X | O (*Depends on Reverb Type) | | | | | O (Mixing Console *Depends on Reverb Type) | O | O | X |
| | | 13 | 1 | 00 – 7F | REVERB PARAMETER 14 | 〃 | Depends on Reverb Type | O | O | X | O (*Depends on Reverb Type) | | | | | O (Mixing Console *Depends on Reverb Type) | O | O | X |
| | | 14 | 1 | 00 – 7F | REVERB PARAMETER 15 | 〃 | Depends on Reverb Type | O | O | X | O (*Depends on Reverb Type) | | | | | O (Mixing Console *Depends on Reverb Type) | O | O | X |
| | | 15 | 1 | 00 – 7F | REVERB PARAMETER 16 | 〃 | Depends on Reverb Type | O | O | X | O (*Depends on Reverb Type) | | | | | O (Mixing Console *Depends on Reverb Type) | O | O | X |

TOTAL SIZE 06

| Address (H) | | | Size (H) | Data (H) | Parameter | Description | XG Default (H) | Corresponding Voice/Part | | | MIDI Reception (effective or not for each part) | | | | | MIDI Transmission (generated data) | | | |
|---|---|---|---|---|---|---|---|---|---|---|---|---|---|---|---|---|---|---|---|
| | | | | | | | | Regular/ Organ Voice | Mic/Vocal Harmony | Natural Voice | Song | Main Layer Left | Keyboard | Style | Extra | Panel (main generation method) | Style | Song | MIDI |
| 02 | 01 | 20 | 2 | 00 – 7F | CHORUS TYPE MSB | Refer to Effect Parameter List | 41 (=CHORUS1) | O | O | X | O | | | | | O (Mixing Console) | O | O | X |
| | | | | 00 – 7F | CHORUS TYPE LSB | 〃 | 00 | | | | | | | | | | | | |
| | | 22 | 1 | 00 – 7F | CHORUS PARAMETER 1 | 〃 | Depends on Chorus Type | O | O | X | O (*Depends on Chorus Type) | | | | | O (Mixing Console *Depends on Chorus Type) | O | O | X |
| | | 23 | 1 | 00 – 7F | CHORUS PARAMETER 2 | 〃 | Depends on Chorus Type | O | O | X | O (*Depends on Chorus Type) | | | | | O (Mixing Console *Depends on Chorus Type) | O | O | X |
| | | 24 | 1 | 00 – 7F | CHORUS PARAMETER 3 | 〃 | Depends on Chorus Type | O | O | X | O (*Depends on Chorus Type) | | | | | O (Mixing Console *Depends on Chorus Type) | O | O | X |

| Address (H) | | | Size (H) | Data (H) | Parameter | Description | XG Default (H) | Corresponding Voice/Part | | | MIDI Reception (effective or not for each part) | | | | | MIDI Transmission (generated data) | | | |
|---|---|---|---|---|---|---|---|---|---|---|---|---|---|---|---|---|---|---|---|
| | | | | | | | | Regular/ Organ Voice | Mic/Vocal Harmony | Natural Voice | Song | Main Layer Left | Keyboard | Style | Extra | Panel (main generation method) | Style | Song | MIDI |
| | | 25 | 1 | 00 – 7F | CHORUS PARAMETER 4 | 〃 | Depends on Chorus Type | O | O | X | O (*Depends on Chorus Type) | | | | | O (Mixing Console *Depends on Chorus Type) | O | O | X |
| | | 26 | 1 | 00 – 7F | CHORUS PARAMETER 5 | 〃 | Depends on Chorus Type | O | O | X | O (*Depends on Chorus Type) | | | | | O (Mixing Console *Depends on Chorus Type) | O | O | X |
| | | 27 | 1 | 00 – 7F | CHORUS PARAMETER 6 | 〃 | Depends on Chorus Type | O | O | X | O (*Depends on Chorus Type) | | | | | O (Mixing Console *Depends on Chorus Type) | O | O | X |
| | | 28 | 1 | 00 – 7F | CHORUS PARAMETER 7 | 〃 | Depends on Chorus Type | O | O | X | O (*Depends on Chorus Type) | | | | | O (Mixing Console *Depends on Chorus Type) | O | O | X |
| | | 29 | 1 | 00 – 7F | CHORUS PARAMETER 8 | 〃 | Depends on Chorus Type | O | O | X | O (*Depends on Chorus Type) | | | | | O (Mixing Console *Depends on Chorus Type) | O | O | X |
| | | 2A | 1 | 00 – 7F | CHORUS PARAMETER 9 | 〃 | Depends on Chorus Type | O | O | X | O (*Depends on Chorus Type) | | | | | O (Mixing Console *Depends on Chorus Type) | O | O | X |
| | | 2B | 1 | 00 – 7F | CHORUS PARAMETER 10 | 〃 | Depends on Chorus Type | O | O | X | O (*Depends on Chorus Type) | | | | | O (Mixing Console *Depends on Chorus Type) | O | O | X |
| | | 2C | 1 | 00 – 7F | CHORUS RETURN | -∞dB – 0dB – +6dB (0 – 96 – 127) | 40 | O | O | X | O | | | | | O (Mixing Console) | O | O | X |
| | | 2D | 1 | 01 – 7F | CHORUS PAN | L63 – C – R63 | 40 | O | O | X | O | | | | | X | X | O | X |
| | | 2E | 1 | 00 – 7F | SEND CHORUS TO REVERB | -∞dB – 0dB – +6dB (0 – 96 – 127) | 00 | O | O | X | O | | | | | X | X | O | X |
| TOTAL SIZE | | 0F | | | | | | | | | | | | | | | | | |
| 02 | 01 | 30 | 1 | 00 – 7F | CHORUS PARAMETER 11 | Refer to Effect Parameter List | Depends on Chorus Type | O | O | X | O (*Depends on Chorus Type) | | | | | O (Mixing Console *Depends on Chorus Type) | O | O | X |
| | | 31 | 1 | 00 – 7F | CHORUS PARAMETER 12 | 〃 | Depends on Chorus Type | O | O | X | O (*Depends on Chorus Type) | | | | | O (Mixing Console *Depends on Chorus Type) | O | O | X |
| | | 32 | 1 | 00 – 7F | CHORUS PARAMETER 13 | 〃 | Depends on Chorus Type | O | O | X | O (*Depends on Chorus Type) | | | | | O (Mixing Console *Depends on Chorus Type) | O | O | X |
| | | 33 | 1 | 00 – 7F | CHORUS PARAMETER 14 | 〃 | Depends on Chorus Type | O | O | X | O (*Depends on Chorus Type) | | | | | O (Mixing Console *Depends on Chorus Type) | O | O | X |
| | | 34 | 1 | 00 – 7F | CHORUS PARAMETER 15 | 〃 | Depends on Chorus Type | O | O | X | O (*Depends on Chorus Type) | | | | | O (Mixing Console *Depends on Chorus Type) | O | O | X |
| | | 35 | 1 | 00 – 7F | CHORUS PARAMETER 16 | 〃 | Depends on Chorus Type | O | O | X | O (*Depends on Chorus Type) | | | | | O (Mixing Console *Depends on Chorus Type) | O | O | X |
| TOTAL SIZE | | 06 | | | | | | | | | | | | | | | | | |
| 02 | 01 | 40 | 2 | 00 – 7F<br>00 – 7F | VARIATION TYPE MSB<br>VARIATION TYPE LSB | Refer to Effect Parameter List<br>〃 | 05 (=DELAY L, C, R)<br>00 | O | O | X | O | | | | | O (Mixing Console) | O | O | X |
| | | 42 | 2 | 00 – 7F<br>00 – 7F | VARIATION PARAMETER 1 MSB<br>VARIATION PARAMETER 1 LSB | 〃<br>〃 | Depends on Variation Type | O | O | X | O (*Depends on Variation Type) | | | | | O (Mixing Console *Depends on Variation Type) | O | O | X |
| | | 44 | 2 | 00 – 7F<br>00 – 7F | VARIATION PARAMETER 2 MSB<br>VARIATION PARAMETER 2 LSB | 〃<br>〃 | Depends on Variation Type | O | O | X | O (*Depends on Variation Type) | | | | | O (Mixing Console *Depends on Variation Type) | O | O | X |
| | | 46 | 2 | 00 – 7F<br>00 – 7F | VARIATION PARAMETER 3 MSB<br>VARIATION PARAMETER 3 LSB | 〃<br>〃 | Depends on Variation Type | O | O | X | O (*Depends on Variation Type) | | | | | O (Mixing Console *Depends on Variation Type) | O | O | X |
| | | 48 | 2 | 00 – 7F<br>00 – 7F | VARIATION PARAMETER 4 MSB<br>VARIATION PARAMETER 4 LSB | 〃<br>〃 | Depends on Variation Type | O | O | X | O (*Depends on Variation Type) | | | | | O (Mixing Console *Depends on Variation Type) | O | O | X |
| | | 4A | 2 | 00 – 7F<br>00 – 7F | VARIATION PARAMETER 5 MSB<br>VARIATION PARAMETER 5 LSB | 〃<br>〃 | Depends on Variation Type | O | O | X | O (*Depends on Variation Type) | | | | | O (Mixing Console *Depends on Variation Type) | O | O | X |
| | | 4C | 2 | 00 – 7F<br>00 – 7F | VARIATION PARAMETER 6 MSB<br>VARIATION PARAMETER 6 LSB | 〃<br>〃 | Depends on Variation Type | O | O | X | O (*Depends on Variation Type) | | | | | O (Mixing Console *Depends on Variation Type) | O | O | X |
| | | 4E | 2 | 00 – 7F<br>00 – 7F | VARIATION PARAMETER 7 MSB<br>VARIATION PARAMETER 7 LSB | 〃<br>〃 | Depends on Variation Type | O | O | X | O (*Depends on Variation Type) | | | | | O (Mixing Console *Depends on Variation Type) | O | O | X |
| | | 50 | 2 | 00 – 7F<br>00 – 7F | VARIATION PARAMETER 8 MSB<br>VARIATION PARAMETER 8 LSB | 〃<br>〃 | Depends on Variation Type | O | O | X | O (*Depends on Variation Type) | | | | | O (Mixing Console *Depends on Variation Type) | O | O | X |
| | | 52 | 2 | 00 – 7F<br>00 – 7F | VARIATION PARAMETER 9 MSB<br>VARIATION PARAMETER 9 LSB | 〃<br>〃 | Depends on Variation Type | O | O | X | O (*Depends on Variation Type) | | | | | O (Mixing Console *Depends on Variation Type) | O | O | X |
| | | 54 | 2 | 00 – 7F<br>00 – 7F | VARIATION PARAMETER 10 MSB<br>VARIATION PARAMETER 10 LSB | 〃<br>〃 | Depends on Variation Type | O | O | X | O (*Depends on Variation Type) | | | | | O (Mixing Console *Depends on Variation Type) | O | O | X |
| | | 56 | 1 | 00 – 7F | VARIATION RETURN | -∞dB – 0dB – +6dB (0 – 96 – 127) | 40 | O | O | X | O | | | | | O (Mixing Console) | O | O | X |
| | | 57 | 1 | 01 – 7F | VARIATION PAN | L63 – C – R63 | 40 | O | O | X | O | | | | | X | O | O | X |
| | | 58 | 1 | 00 – 7F | SEND VARIATION TO REVERB | -∞dB – 0dB – +6dB (0 – 96 – 127) | 00 | O | O | X | O | | | | | X | O | O | X |
| | | 59 | 1 | 00 – 7F | SEND VARIATION TO CHORUS | -∞dB – 0dB – +6dB (0 – 96 – 127) | 00 | O | O | X | O | | | | | X | O | O | X |
| | | 5A | 1 | 00 – 01 | VARIATION CONNECTION | INSERTION, SYSTEM | 00 | O | O | X | O | | | | | X | O | O | X |
| | | 5B | 1 | 00 – 7F | VARIATION PART NUMBER | Reception:<br>Part 1 – 16 (0 – 15)<br>Transmission:<br>Part 1 – 16 (0 – 15)<br>AD (64)<br>OFF (127) | 7F | O | O | X | O | | | | | O (Mixing Console) | O | O | X |
| | | 5C | 1 | 00 – 7F | MW VARIATION CONTROL DEPTH | -64 – 0 – +63 | 40 | O | O | X | O | | | | | X | O | O | X |
| | | 5D | 1 | 00 – 7F | BEND VARIATION CONTROL DEPTH | -64 – 0 – +63 | 40 | O | O | X | O | | | | | X | O | O | X |
| | | 5E | 1 | 00 – 7F | CAT VARIATION CONTROL DEPTH | -64 – 0 – +63 | 40 | O | O | X | O | | | | | X | O | O | X |
| | | 5F | 1 | 00 – 7F | AC1 VARIATION CONTROL DEPTH | -64 – 0 – +63 | 40 | X | X | X | X | | | | | X | X | X | X |
| | | 60 | 1 | 00 – 7F | AC2 VARIATION CONTROL DEPTH | -64 – 0 – +63 | 40 | X | X | X | X | | | | | X | X | X | X |
| TOTAL SIZE | | 21 | | | | | | | | | | | | | | | | | |

| Address (H) | | | Size (H) | Data (H) | Parameter | Description | XG Default (H) | Corresponding Voice/Part | | | MIDI Reception (effective or not for each part) | | | | | MIDI Transmission (generated data) | | | |
|---|---|---|---|---|---|---|---|---|---|---|---|---|---|---|---|---|---|---|---|
| | | | | | | | | Regular/ Organ Voice | Mic/Vocal Harmony | Natural Voice | Song | Main Layer Left | Keyboard | Style | Extra | Panel (main generation method) | Style | Song | MIDI |
| | | 72 | 1 | 00 – 7F | VARIATION PARAMETER 13 | 〃 | Depends on Variation Type | O | O | X | O (*Depends on Variation Type) | | | | | O (Mixing Console *Depends on Variation Type) | O | O | X |
| | | 73 | 1 | 00 – 7F | VARIATION PARAMETER 14 | 〃 | Depends on Variation Type | O | O | X | O (*Depends on Variation Type) | | | | | O (Mixing Console *Depends on Variation Type) | O | O | X |
| | | 74 | 1 | 00 – 7F | VARIATION PARAMETER 15 | 〃 | Depends on Variation Type | O | O | X | O (*Depends on Variation Type) | | | | | O (Mixing Console *Depends on Variation Type) | O | O | X |
| | | 75 | 1 | 00 – 7F | VARIATION PARAMETER 16 | 〃 | Depends on Variation Type | O | O | X | O (*Depends on Variation Type) | | | | | O (Mixing Console *Depends on Variation Type) | O | O | X |

TOTAL SIZE 06

### MIDI Parameter Change table (MULTI EQ) (CVP-210/208 only)

| Address (H) | | | Size (H) | Data (H) | Parameter | Description | Corresponding Voice/Part | | | MIDI Reception (effective or not for each part) | | | | | MIDI Transmission (generated data) | | | |
|---|---|---|---|---|---|---|---|---|---|---|---|---|---|---|---|---|---|---|
| | | | | | | | Regular/ Organ Voice | Mic/Vocal Harmony | Natural Voice | Song | Main Layer Left | Keyboard | Style | Extra | Panel (main generation method) | Style | Song | MIDI |
| 02 | 40 | 00 | 1 | 00 – 04 | EQ TYPE | flat, jazz, pops, rock, classic | O | O | X | O | | | | | X | X | O | X |
| | | 01 | 1 | 34 – 4C | EQ GAIN1 | -12 – 0 – +12[dB] | O | O | X | O | | | | | O (Mixing Console) | X | O | X |
| | | 02 | 1 | 04 – 28 | EQ FREQUENCY1 | 32 – 2.0k[Hz] | O | O | X | O | | | | | O (Mixing Console) | X | O | X |
| | | 03 | 1 | 01 – 78 | EQ Q1 | 0.1 – 12.0 | O | O | X | O | | | | | O (Mixing Console) | X | O | X |
| | | 04 | 1 | 00 – 01 | EQ SHAPE1 | shelving, peaking | O | O | X | O | | | | | X | X | O | X |
| | | 05 | 1 | 34 – 4C | EQ GAIN2 | -12 – 0 – +12[dB] | O | O | X | O | | | | | O (Mixing Console) | X | O | X |
| | | 06 | 1 | 0E – 36 | EQ FREQUENCY2 | 100 – 10.0k[Hz] | O | O | X | O | | | | | O (Mixing Console) | X | O | X |
| | | 07 | 1 | 01 – 78 | EQ Q2 | 0.1 – 12.0 | O | O | X | O | | | | | O (Mixing Console) | X | O | X |
| | | 08 | 1 | | NOT USED | | - | - | - | - | | | | | - | - | - | - |
| | | 09 | 1 | 34 – 4C | EQ GAIN3 | -12 – 0 – +12[dB] | O | O | X | O | | | | | O (Mixing Console) | X | O | X |
| | | 0A | 1 | 0E – 36 | EQ FREQUENCY3 | 100 – 10.0k[Hz] | O | O | X | O | | | | | O (Mixing Console) | X | O | X |
| | | 0B | 1 | 01 – 78 | EQ Q3 | 0.1 – 12.0 | O | O | X | O | | | | | O (Mixing Console) | X | O | X |
| | | 0C | 1 | | NOT USED | | - | - | - | - | | | | | - | - | - | - |
| | | 0D | 1 | 34 – 4C | EQ GAIN4 | -12 – 0 – +12[dB] | O | O | X | O | | | | | O (Mixing Console) | X | O | X |
| | | 0E | 1 | 0E – 36 | EQ FREQUENCY4 | 100 – 10.0k[Hz] | O | O | X | O | | | | | O (Mixing Console) | X | O | X |
| | | 0F | 1 | 01 – 78 | EQ Q4 | 0.1 – 12.0 | O | O | X | O | | | | | O (Mixing Console) | X | O | X |
| | | 10 | 1 | | NOT USED | | - | - | - | - | | | | | - | - | - | - |
| | | 11 | 1 | 34 – 4C | EQ GAIN5 | -12 – 0 – +12[dB] | O | O | X | O | | | | | O (Mixing Console) | X | O | X |
| | | 12 | 1 | 1C – 3A | EQ FREQUENCY5 | 0.5k – 16.0k[Hz] | O | O | X | O | | | | | O (Mixing Console) | X | O | X |
| | | 13 | 1 | 01 – 78 | EQ Q5 | 0.1 – 12.0 | O | O | X | O | | | | | O (Mixing Console) | X | O | X |
| | | 14 | 1 | 00 – 01 | EQ SHAPE5 | shelving, peaking | O | O | X | O | | | | | X | X | O | X |

TOTAL SIZE 5

The MULTI EQ Parameter cannot be reset to its factory setting with XG SYSTEM ON.

### MIDI Parameter Change table (EFFECT2) (CVP-210/208 only)

| Address (H) | | | Size (H) | Data (H) | Parameter | Description | Corresponding Voice/Part | | | MIDI Reception (effective or not for each part) | | | | | MIDI Transmission (generated data) | | | |
|---|---|---|---|---|---|---|---|---|---|---|---|---|---|---|---|---|---|---|
| | | | | | | | Regular/ Organ Voice | Mic/Vocal Harmony | Natural Voice | Song | Main Layer Left | Keyboard | Style | Extra | Panel (main generation method) | Style | Song | MIDI |
| 03 | n | 00 | 2 | 00 – 7F<br>00 – 7F | INSERTION EFFECT TYPE MSB<br>INSERTION EFFECT TYPE LSB | Refer to Effect Parameter List<br>〃 | O | O | X | O | | | | | O (Mixing Console) | X | O | X |
| | | 02 | 1 | 00 – 7F | INSERTION EFFECT PARAMETER 1 | 〃 | O | O | X | O (*Depends on Insertion Type) | | | | | O (Mixing Console *Depends on Insertion Type) | X | O | X |
| | | 03 | 1 | 00 – 7F | INSERTION EFFECT PARAMETER 2 | 〃 | O | O | X | O (*Depends on Insertion Type) | | | | | O (Mixing Console *Depends on Insertion Type) | X | O | X |
| | | 04 | 1 | 00 – 7F | INSERTION EFFECT PARAMETER 3 | 〃 | O | O | X | O (*Depends on Insertion Type) | | | | | O (Mixing Console *Depends on Insertion Type) | X | O | X |
| | | 05 | 1 | 00 – 7F | INSERTION EFFECT PARAMETER 4 | 〃 | O | O | X | O (*Depends on Insertion Type) | | | | | O (Mixing Console *Depends on Insertion Type) | X | O | X |
| | | 06 | 1 | 00 – 7F | INSERTION EFFECT PARAMETER 5 | 〃 | O | O | X | O (*Depends on Insertion Type) | | | | | O (Mixing Console *Depends on Insertion Type) | X | O | X |
| | | 07 | 1 | 00 – 7F | INSERTION EFFECT PARAMETER 6 | 〃 | O | O | X | O (*Depends on Insertion Type) | | | | | O (Mixing Console *Depends on Insertion Type) | X | O | X |
| | | 08 | 1 | 00 – 7F | INSERTION EFFECT PARAMETER 7 | 〃 | O | O | X | O (*Depends on Insertion Type) | | | | | O (Mixing Console *Depends on Insertion Type) | X | O | X |
| | | 09 | 1 | 00 – 7F | INSERTION EFFECT PARAMETER 8 | 〃 | O | O | X | O (*Depends on Insertion Type) | | | | | O (Mixing Console *Depends on Insertion Type) | X | O | X |
| | | 0A | 1 | 00 – 7F | INSERTION EFFECT PARAMETER 9 | 〃 | O | O | X | O (*Depends on Insertion Type) | | | | | O (Mixing Console *Depends on Insertion Type) | X | O | X |
| | | 0B | 1 | 00 – 7F | INSERTION EFFECT PARAMETER 10 | 〃 | O | O | X | O (*Depends on Insertion Type) | | | | | O (Mixing Console *Depends on Insertion Type) | X | O | X |
| | | 0C | 1 | 00 – 7F | INSERTION EFFECT PART NUMBER | Reception:<br>Part 1 – 16 (0 – 15)<br>Transmission:<br>Part 1 – 16 (0 – 15)<br>AD (64)<br>OFF (127) | O | O | X | O | | | | | O (Mixing Console) | X | O | X |
| | | 0D | 1 | 00 – 7F | MW INSERTION CONTROL DEPTH | -64 – 0 – +63 | O | O | X | O | | | | | X | X | O | X |
| | | 0E | 1 | 00 – 7F | BEND INSERTION CONTROL DEPTH | -64 – 0 – +63 | O | O | X | O | | | | | X | X | O | X |
| | | 0F | 1 | 00 – 7F | CAT INSERTION CONTROL DEPTH | -64 – 0 – +63 | O | O | X | O | | | | | X | X | O | X |
| | | 10 | 1 | 00 – 7F | AC1 INSERTION CONTROL DEPTH | -64 – 0 – +63 | X | X | X | X | | | | | X | X | X | X |
| | | 11 | 1 | 00 – 7F | AC2 INSERTION CONTROL DEPTH | -64 – 0 – +63 | X | X | X | X | | | | | X | X | X | X |

TOTAL SIZE 12

| | | | | | | | | | | | | | | | | | | |
|---|---|---|---|---|---|---|---|---|---|---|---|---|---|---|---|---|---|---|
| 03 | n | 20 | 1 | 00 – 7F | INSERTION EFFECT PARAMETER 11 | Refer to Effect Parameter List | O | O | X | O (*Depends on Insertion Type) | | | | | O (Mixing Console *Depends on Insertion Type) | X | O | X |
| | | 21 | 1 | 00 – 7F | INSERTION EFFECT PARAMETER 12 | 〃 | O | O | X | O (*Depends on Insertion Type) | | | | | O (Mixing Console *Depends on Insertion Type) | X | O | X |
| | | 22 | 1 | 00 – 7F | INSERTION EFFECT PARAMETER 13 | 〃 | O | O | X | O (*Depends on Insertion Type) | | | | | O (Mixing Console *Depends on Insertion Type) | X | O | X |
| | | 23 | 1 | 00 – 7F | INSERTION EFFECT PARAMETER 14 | 〃 | O | O | X | O (*Depends on Insertion Type) | | | | | O (Mixing Console *Depends on Insertion Type) | X | O | X |
| | | 24 | 1 | 00 – 7F | INSERTION EFFECT PARAMETER 15 | 〃 | O | O | X | O (*Depends on Insertion Type) | | | | | O (Mixing Console *Depends on Insertion Type) | X | O | X |
| | | 25 | 1 | 00 – 7F | INSERTION EFFECT PARAMETER 16 | 〃 | O | O | X | O (*Depends on Insertion Type) | | | | | O (Mixing Console *Depends on Insertion Type) | X | O | X |

TOTAL SIZE 6

| Address (H) | | | Size (H) | Data (H) | Parameter | Description | Corresponding Voice/Part | | | MIDI Reception (effective or not for each part) | | | | | MIDI Transmission (generated data) | | | |
|---|---|---|---|---|---|---|---|---|---|---|---|---|---|---|---|---|---|---|
| | | | | | | | Regular/ Organ Voice | Mic/Vocal Harmony | Natural Voice | Song | Main Layer Left | Keyboard | Style | Extra | Panel (main generation method) | Style | Song | MIDI |
| 03 | n | 30 | 2 | 00 – 7F | INSERTION EFFECT PARAMETER 1 MSB | Refer to Effect Parameter List | O | O | X | O (*Depends on Insertion Type) | | | | | O (Mixing Console *Depends on Insertion Type) | X | O | X |
| | | | | 00 – 7F | INSERTION EFFECT PARAMETER 1 LSB | 〃 | | | | | | | | | | | | |
| | | 32 | 2 | 00 – 7F | INSERTION EFFECT PARAMETER 2 MSB | 〃 | O | O | X | O (*Depends on Insertion Type) | | | | | O (Mixing Console *Depends on Insertion Type) | X | O | X |
| | | | | 00 – 7F | INSERTION EFFECT PARAMETER 2 LSB | 〃 | | | | | | | | | | | | |
| | | 34 | 2 | 00 – 7F | INSERTION EFFECT PARAMETER 3 MSB | 〃 | O | O | X | O (*Depends on Insertion Type) | | | | | O (Mixing Console *Depends on Insertion Type) | X | O | X |
| | | | | 00 – 7F | INSERTION EFFECT PARAMETER 3 LSB | 〃 | | | | | | | | | | | | |
| | | 36 | 2 | 00 – 7F | INSERTION EFFECT PARAMETER 4 MSB | 〃 | O | O | X | O (*Depends on Insertion Type) | | | | | O (Mixing Console *Depends on Insertion Type) | X | O | X |
| | | | | 00 – 7F | INSERTION EFFECT PARAMETER 4 LSB | 〃 | | | | | | | | | | | | |
| | | 38 | 2 | 00 – 7F | INSERTION EFFECT PARAMETER 5 MSB | 〃 | O | O | X | O (*Depends on Insertion Type) | | | | | O (Mixing Console *Depends on Insertion Type) | X | O | X |
| | | | | 00 – 7F | INSERTION EFFECT PARAMETER 5 LSB | 〃 | | | | | | | | | | | | |
| | | 3A | 2 | 00 – 7F | INSERTION EFFECT PARAMETER 6 MSB | 〃 | O | O | X | O (*Depends on Insertion Type) | | | | | O (Mixing Console *Depends on Insertion Type) | X | O | X |
| | | | | 00 – 7F | INSERTION EFFECT PARAMETER 6 LSB | 〃 | | | | | | | | | | | | |
| | | 3C | 2 | 00 – 7F | INSERTION EFFECT PARAMETER 7 MSB | 〃 | O | O | X | O (*Depends on Insertion Type) | | | | | O (Mixing Console *Depends on Insertion Type) | X | O | X |
| | | | | 00 – 7F | INSERTION EFFECT PARAMETER 7 LSB | 〃 | | | | | | | | | | | | |
| | | 3E | 2 | 00 – 7F | INSERTION EFFECT PARAMETER 8 MSB | 〃 | O | O | X | O (*Depends on Insertion Type) | | | | | O (Mixing Console *Depends on Insertion Type) | X | O | X |
| | | | | 00 – 7F | INSERTION EFFECT PARAMETER 8 LSB | 〃 | | | | | | | | | | | | |
| | | 40 | 2 | 00 – 7F | INSERTION EFFECT PARAMETER 9 MSB | 〃 | O | O | X | O (*Depends on Insertion Type) | | | | | O (Mixing Console *Depends on Insertion Type) | X | O | X |
| | | | | 00 – 7F | INSERTION EFFECT PARAMETER 9 LSB | 〃 | | | | | | | | | | | | |
| | | 42 | 2 | 00 – 7F | INSERTION EFFECT PARAMETER 10 MSB | 〃 | O | O | X | O (*Depends on Insertion Type) | | | | | O (Mixing Console *Depends on Insertion Type) | X | O | X |
| | | | | 00 – 7F | INSERTION EFFECT PARAMETER 10 LSB | 〃 | | | | | | | | | | | | |
| TOTAL SIZE | | | 14 | | | | | | | | | | | | | | | |

The EFFECT 2 Parameter cannot be reset to its factory setting with XG SYSTEM ON.

The second byte of the address is considered as an Insertion effect number.
n: insertion effect number

For effect types that do not require MSB, the Parameters for Address 02 – 0B will be received and the Parameters for Address 30 – 42 will not be received.
For effect types that require MSB, the Parameters for Address 30 – 42 will be received and the Parameters for Address 02 – 0B will not be received.
When Bulk Dumps that include Effect Type data are transmitted, the Parameters for Address 02 – 0B will always be transmitted. But, effects that require MSB, when the bulk dump is received the Parameters for Address 02 – 0B will not be received.

CVP-210: n=0 – 4
CVP-208: n=0 – 2

## MIDI Parameter Change table (SPECIAL EFFECT) (CVP-210/208 only)

| Address (H) | | | Size (H) | Data (H) | Parameter | Description | Corresponding Voice/Part | | | MIDI Reception (effective or not for each part) | | | | | MIDI Transmission (generated data) | | | |
|---|---|---|---|---|---|---|---|---|---|---|---|---|---|---|---|---|---|---|
| | | | | | | | Regular/ Organ Voice | Mic/Vocal Harmony | Natural Voice | Song | Main Layer Left | Keyboard | Style | Extra | Panel (main generation method) | Style | Song | MIDI |
| 04 | 00 | 00 | 2 | 00 – 7F | INSERTION EFFECT TYPE MSB | Vocoder (89), Chordal (90), Detune (91), Chromatic (92), Thru (0 – 88, 93 – 127) | X | O | X | X | X | X | X | X | O (VH Type Select) | X | O | X |
| | | | | 00 – 7F | INSERTION EFFECT TYPE LSB | | | | | | | | | | | | | |
| | | 02 | 1 | 00 – 7F | INSERTION EFFECT PARAMETER 1 Harmony Mode | | X | O | X | X | X | X | X | X | O (VH Type Select) | X | O | X |
| | | 03 | 1 | 00 – 7F | INSERTION EFFECT PARAMETER 2 Harmony Gender Type | Off (0), Auto (1) | X | O | X | X | X | X | X | X | O (VH Type Select) | X | O | X |
| | | 04 | 1 | 00 – 7F | INSERTION EFFECT PARAMETER 3 Lead Gender Type | Off (0), Unison (1), Male (2), Female (3) | X | O | X | X | X | X | X | X | O (VH Type Select) | X | O | X |
| | | 05 | 1 | 00 – 7F | INSERTION EFFECT PARAMETER 4 Lead Gender Depth | -64 – 0 – +63 (0 – 127) | X | O | X | X | X | X | X | X | O (VH Type Select) | X | O | X |
| | | 06 | 1 | 00 – 7F | INSERTION EFFECT PARAMETER 5 Lead Pitch Correction | Free (0), Correct (1) | X | O | X | X | X | X | X | X | O (VH Type Select) | X | O | X |
| | | 07 | 1 | 00 – 7F | INSERTION EFFECT PARAMETER 6 Auto Upper Gender Threshold | 0 – 12 (0 – 12) | X | O | X | X | X | X | X | X | O (VH Type Select) | X | O | X |
| | | 08 | 1 | 00 – 7F | INSERTION EFFECT PARAMETER 7 Auto Lower Gender Threshold | 0 – 12 (0 – 12) | X | O | X | X | X | X | X | X | O (VH Type Select) | X | O | X |
| | | 09 | 1 | 00 – 7F | INSERTION EFFECT PARAMETER 8 Upper Gender Depth | -64 – 0 – +63 (0 – 127) | X | O | X | X | X | X | X | X | O (VH Type Select) | X | O | X |
| | | 0A | 1 | 00 – 7F | INSERTION EFFECT PARAMETER 9 Lower Gender Depth | -64 – 0 – +63 (0 – 127) | X | O | X | X | X | X | X | X | O (VH Type Select) | X | O | X |
| | | 0B | 1 | 00 – 7F | INSERTION EFFECT PARAMETER 10 | L63>H – L=H – L<H63 (1 – 64 – 127) | X | O | X | X | X | X | X | X | O (MicSetting) | X | O | X |
| | | 0C | 1 | 00 – 7F | INSERTION EFFECT PART NUMBER | AD (64), OFF (0 – 63, 65 – 127) | X | O | X | X | X | X | X | X | O (Vocal Harmony Sw) | X | O | X |
| | | 0D | 1 | 00 – 7F | MW INSERTION CONTROL DEPTH | -64 – 0 – +63 | X | X | X | X | X | X | X | X | X | X | X | X |
| | | 0E | 1 | 00 – 7F | BEND INSERTION CONTROL DEPTH | -64 – 0 – +63 | X | X | X | X | X | X | X | X | X | X | X | X |
| | | 0F | 1 | 00 – 7F | CAT INSERTION CONTROL DEPTH | -64 – 0 – +63 | X | X | X | X | X | X | X | X | X | X | X | X |
| | | 10 | 1 | 00 – 7F | AC1 INSERTION CONTROL DEPTH | -64 – 0 – +63 | X | X | X | X | X | X | X | X | X | X | X | X |
| | | 11 | 1 | 00 – 7F | AC2 INSERTION CONTROL DEPTH | -64 – 0 – +63 | X | X | X | X | X | X | X | X | X | X | X | X |
| TOTAL SIZE | | | 12 | | | | | | | | | | | | | | | |

| Address (H) | | | Size (H) | Data (H) | Parameter | Description | Corresponding Voice/Part | | | MIDI Reception (effective or not for each part) | | | | | MIDI Transmission (generated data) | | | |
|---|---|---|---|---|---|---|---|---|---|---|---|---|---|---|---|---|---|---|
| | | | | | | | Regular/ Organ Voice | Mic/Vocal Harmony | Natural Voice | Song | Main Layer Left | Keyboard | Style | Extra | Panel (main generation method) | Style | Song | MIDI |
| 04 | 00 | 14 | 1 | 00 – 7F | UNIQUE INSERTION EFFECT EXTERNAL CONTROL CH1 (HARMONY CHANNEL) | 1 – 16 (0 – 15), OFF (127) | X | O | X | X | X | X | X | X | O (MicSetting) | X | O | X |
| | | 15 | 1 | 00 – 7F | UNIQUE INSERTION EFFECT EXTERNAL CONTROL CH1 (MELODY CHANNEL) | 1 – 16 (0 – 15), OFF (127) | X | O | X | X | X | X | X | X | X | X | O | X |
| TOTAL SIZE | | | 2 | | | | | | | | | | | | | | | |

| | | | | | | | | | | | | | | | | | | |
|---|---|---|---|---|---|---|---|---|---|---|---|---|---|---|---|---|---|---|
| 04 | 00 | 20 | 1 | 00 – 7F | INSERTION EFFECT PARAMETER 11 Vibrate Depth | 0 – 100cent (0 – 127) | X | O | X | X | X | X | X | X | O (VH Type Select) | X | O | X |
| | | 21 | 1 | 00 – 7F | INSERTION EFFECT PARAMETER 12 Vibrate Rate | 0Hz (0), 0.1 – 12.7Hz (1 – 127) | X | O | X | X | X | X | X | X | O (VH Type Select) | X | O | X |
| | | 22 | 1 | 00 – 7F | INSERTION EFFECT PARAMETER 13 Vibrate Delay | 0 – 2.54sec (0 – 127) | X | O | X | X | X | X | X | X | O (VH Type Select) | X | O | X |
| | | 23 | 1 | 00 – 7F | INSERTION EFFECT PARAMETER 14 | | X | X | X | X | X | X | X | X | X | X | X | X |
| | | 24 | 1 | 00 – 7F | INSERTION EFFECT PARAMETER 15 | | X | X | X | X | X | X | X | X | X | X | X | X |
| | | 25 | 1 | 00 – 7F | INSERTION EFFECT PARAMETER 16 | | X | X | X | X | X | X | X | X | X | X | X | X |
| TOTAL SIZE | | | 6 | | | | | | | | | | | | | | | |

The SPECIAL EFFECT Parameter cannot be reset to its factory setting with XG SYSTEM ON.

### MIDI Parameter Change table (MULTI PART)

| Address (H) | | | Size (H) | Data (H) | Parameter | Description | XG Default (H) | Corresponding Voice/Part | | | MIDI Reception (effective or not for each part) | | | | | MIDI Transmission (generated data) | | | |
|---|---|---|---|---|---|---|---|---|---|---|---|---|---|---|---|---|---|---|---|
| | | | | | | | | Regular/ Organ Voice | Mic/Vocal Harmony | Natural Voice | Song | Main Layer Left | Keyboard | Style | Extra | Panel (main generation method) | Style | Song | MIDI |
| 08 | nn | 00 | 1 | 00 – 20 | ELEMENT RESERVE | 0 – 32 | part10=00, other parts=02 | O | X | X | O | X | X | X | X | X | X | O | X |
| | | 01 | 1 | 00 – 7F | BANK SELECT MSB | 0 – 127 | part10=7F, other parts =00 | O | X | O | O | O | X | O | O | X | X | O | X |
| | | 02 | 1 | 00 – 7F | BANK SELECT LSB | 0 – 127 | 00 | O | X | O | O | O | X | O | O | X | X | O | X |
| | | 03 | 1 | 00 – 7F | PROGRAM NUMBER | 0 – 127 | 00 | O | X | O | O | O | X | O | O | X | X | O | X |
| | | 04 | 1 | 00 – 0F, 7F | Rcv CHANNEL | 1 – 16, OFF | Part No. | O | X | X | O | X | X | X | X | X | X | O | X |
| | | 05 | 1 | 00 – 01 | MONO/POLY MODE | MONO, POLY | 01 | O | X | X | O | X | X | X | X | X | X | O | X |
| | | 06 | 1 | 00 – 02 | SAME NOTE NUMBER KEY ON ASSIGN | SINGLE, MULTI, INST (for Drum) | 01 | O | X | X | O | X | X | O | X | X | X | O | X |
| | | 07 | 1 | 00 – 03 | PART MODE | NORMAL, DRUM, DRUMS1 – 2 | part10=02, other parts=00 | O | X | O | O | X | X | X | X | O (Drum Voice) | X | O | X |
| | | 08 | 1 | 00 – 7F | CHANNEL TRANSPOSE | -24 – 0 – +24[semitones] | 40 | O | X | O | O | O | X | O | O | X | X | O | X |
| | | 09<br>0A | 2 | 00 – 0F<br>00 – 0F | DETUNE | -12.8 – 0 – +12.7[Hz]<br>1st bit3-0→bit7-4<br>2nd bit3-0→bit3-0 | 08 00 | O | X | O | O | O | X | O | O | X | X | O | X |
| | | 0B | 1 | 00 – 7F | VOLUME | 0 – 127 | 64 | O | X | O | O | O | X | O | O | X | X | O | X |
| | | 0C | 1 | 00 – 7F | VELOCITY SENSE DEPTH | 0 – 127 | 40 | O | X | O | O | O | X | X | O | O (Sound Creator) | X | O | X |
| | | 0D | 1 | 00 – 7F | VELOCITY SENSE OFFSET | 0 – 127 | 40 | O | X | O | O | O | X | X | O | O (Sound Creator) | X | O | X |
| | | 0E | 1 | 00 – 7F | PAN | RND, L63 – C – R63 | 40 | O | X | O | O | O | X | O | O | X | X | O | X |
| | | 0F | 1 | 00 – 7F | NOTE LIMIT LOW | C-2 – G8 | 00 | O | X | X | O | X | X | X | X | X | X | O | X |
| | | 10 | 1 | 00 – 7F | NOTE LIMIT HIGH | C-2 – G8 | 7F | O | X | X | O | X | X | X | X | X | X | O | X |
| | | 11 | 1 | 00 – 7F | DRY LEVEL | 0 – 127 | 7F | O | X | X | O | O | X | O | O | O (Sound Creator) | X | O | X |
| | | 12 | 1 | 00 – 7F | CHORUS SEND | 0 – 127 | 00 | O | X | O | O | O | X | O | O | X | X | O | X |
| | | 13 | 1 | 00 – 7F | REVERB SEND | 0 – 127 | 28 | O | X | O | O | O | X | O | O | X | X | O | X |
| | | 14 | 1 | 00 – 7F | VARIATION SEND | 0 – 127 | 00 | O | X | X | O | O | X | O | O | X | X | O | X |
| | | 15 | 1 | 00 – 7F | VIBRATO RATE | -64 – 0 – +63 | 40 | O | X | X | O | O | X | O | O | X | X | O | X |
| | | 16 | 1 | 00 – 7F | VIBRATO DEPTH | -64 – 0 – +63 | 40 | O | X | X | O | O | X | O | O | X | X | O | X |
| | | 17 | 1 | 00 – 7F | VIBRATO DELAY | -64 – 0 – +63 | 40 | O | X | X | O | O | X | O | O | X | X | O | X |
| | | 18 | 1 | 00 – 7F | FILTER CUTOFF FREQUENCY | -64 – 0 – +63 | 40 | O | X | X | O | O | X | O | O | X | X | O | X |
| | | 19 | 1 | 00 – 7F | FILTER RESONANCE | -64 – 0 – +63 | 40 | O | X | X | O | O | X | O | O | X | X | O | X |
| | | 1A | 1 | 00 – 7F | EG ATTACK TIME | -64 – 0 – +63 | 40 | O | X | X | O | O | X | O | O | X | X | O | X |
| | | 1B | 1 | 00 – 7F | EG DECAY TIME | -64 – 0 – +63 | 40 | O | X | X | O | O | X | O | O | X | X | O | X |
| | | 1C | 1 | 00 – 7F | EG RELEASE TIME | -64 – 0 – +63 | 40 | O | X | X | O | O | X | O | O | X | X | O | X |
| | | 1D | 1 | 28 – 58 | MW PITCH CONTROL | -24 – 0 – +24[semitones] | 40 | O | X | X | O | O | X | O | O | X | X | O | X |
| | | 1E | 1 | 00 – 7F | MW LOW PASS FILTER CONTROL | -9600 – 0 – +9450[cent] | 40 | O | X | X | O | O | X | O | O | X | X | O | X |
| | | 1F | 1 | 00 – 7F | MW AMPLITUDE CONTROL | -100 – 0 – +100[%] | 40 | O | X | X | O | O | X | O | O | X | X | O | X |
| | | 20 | 1 | 00 – 7F | MW LFO PMOD DEPTH | 0 – 127 | 0A | O | X | X | O | O | X | O | O | X | X | O | X |
| | | 21 | 1 | 00 – 7F | MW LFO FMOD DEPTH | 0 – 127 | 00 | O | X | X | O | O | X | O | O | X | X | O | X |
| | | 22 | 1 | 00 – 7F | MW LFO AMOD DEPTH | 0 – 127 | 00 | O | X | X | O | O | X | O | O | X | X | O | X |
| | | 23 | 1 | 28 – 58 | BEND PITCH CONTROL | -24 – 0 – +24[semitones] | 42 | O | X | O | O | O | X | O | O | X | X | O | X |
| | | 24 | 1 | 00 – 7F | BEND LOW PASS FILTER CONTROL | -9600 – 0 – +9450[cent] | 40 | O | X | X | O | O | X | O | O | X | X | O | X |
| | | 25 | 1 | 00 – 7F | BEND AMPLITUDE CONTROL | -100 – 0 – +100[%] | 40 | O | X | X | O | O | X | O | O | X | X | O | X |
| | | 26 | 1 | 00 – 7F | BEND LFO PMOD DEPTH | 0 – 127 | 00 | O | X | X | O | O | X | O | O | X | X | O | X |
| | | 27 | 1 | 00 – 7F | BEND LFO FMOD DEPTH | 0 – 127 | 00 | O | X | X | O | O | X | O | O | X | X | O | X |
| | | 28 | 1 | 00 – 7F | BEND LFO AMOD DEPTH | 0 – 127 | 00 | O | X | X | O | O | X | O | O | X | X | O | X |
| TOTAL SIZE | | | 29 | | | | | | | | | | | | | | | | |

| | | | | | | | | | | | | | | | | | | |
|---|---|---|---|---|---|---|---|---|---|---|---|---|---|---|---|---|---|---|
| 08 | nn | 30 | 1 | 00 – 01 | Rcv PITCH BEND | OFF, ON | 01 | X | X | X | X | X | X | X | X | X | X | X | X |
| | | 31 | 1 | 00 – 01 | Rcv CH AFTER TOUCH (CAT) | OFF, ON | 01 | X | X | X | X | X | X | X | X | X | X | X | X |
| | | 32 | 1 | 00 – 01 | Rcv PROGRAM CHANGE | OFF, ON | 01 | X | X | X | X | X | X | X | X | X | X | X | X |
| | | 33 | 1 | 00 – 01 | Rcv CONTROL CHANGE | OFF, ON | 01 | X | X | X | X | X | X | X | X | X | X | X | X |
| | | 34 | 1 | 00 – 01 | Rcv POLY AFTER TOUCH (PAT) | OFF, ON | 01 | X | X | X | X | X | X | X | X | X | X | X | X |
| | | 35 | 1 | 00 – 01 | Rcv NOTE MESSAGE | OFF, ON | 01 | O | X | O | O | X | X | X | X | X | X | O | X |
| | | 36 | 1 | 00 – 01 | Rcv RPN | OFF, ON | 01 | X | X | X | X | X | X | X | X | X | X | X | X |
| | | 37 | 1 | 00 – 01 | Rcv NRPN | OFF, ON | XG mode=01, GM mode=00 | X | X | X | X | X | X | X | X | X | X | X | X |
| | | 38 | 1 | 00 – 01 | Rcv MODULATION | OFF, ON | 01 | X | X | X | X | X | X | X | X | X | X | X | X |
| | | 39 | 1 | 00 – 01 | Rcv VOLUME | OFF, ON | 01 | X | X | X | X | X | X | X | X | X | X | X | X |
| | | 3A | 1 | 00 – 01 | Rcv PAN | OFF, ON | 01 | X | X | X | X | X | X | X | X | X | X | X | X |
| | | 3B | 1 | 00 – 01 | Rcv EXPRESSION | OFF, ON | 01 | X | X | X | X | X | X | X | X | X | X | X | X |

| Address (H) | | | Size (H) | Data (H) | Parameter | Description | XG Default (H) | Corresponding Voice/Part | | | MIDI Reception (effective or not for each part) | | | | | MIDI Transmission (generated data) | | | |
|---|---|---|---|---|---|---|---|---|---|---|---|---|---|---|---|---|---|---|---|
| | | | | | | | | Regular/ Organ Voice | Mic/Vocal Harmony | Natural Voice | Song | Main Layer Left | Keyboard | Style | Extra | Panel (main generation method) | Style | Song | MIDI |
| | | 3C | 1 | 00 – 01 | Rcv HOLD1 | OFF, ON | 01 | X | X | X | X | X | X | X | X | X | X | X | X |
| | | 3D | 1 | 00 – 01 | Rcv PORTAMENTO | OFF, ON | 01 | X | X | X | X | X | X | X | X | X | X | X | X |
| | | 3E | 1 | 00 – 01 | Rcv SOSTENUTO | OFF, ON | 01 | X | X | X | X | X | X | X | X | X | X | X | X |
| | | 3F | 1 | 00 – 01 | Rcv SOFT PEDAL | OFF, ON | 01 | X | X | X | X | X | X | X | X | X | X | X | X |
| | | 40 | 1 | 00 – 01 | Rcv BANK SELECT | OFF, ON | 01 | X | X | X | X | X | X | X | X | X | X | X | X |
| | | 41 | 1 | 00 – 7F | SCALE TUNING C | -63 – 0 – +63[cent] | 40 | O | X | O | O | O | X | O | O | O (Function) | X | O | X |
| | | 42 | 1 | 00 – 7F | SCALE TUNING C♯ | -63 – 0 – +63[cent] | 40 | O | X | O | O | O | X | O | O | O (Function) | X | O | X |
| | | 43 | 1 | 00 – 7F | SCALE TUNING D | -63 – 0 – +63[cent] | 40 | O | X | O | O | O | X | O | O | O (Function) | X | O | X |
| | | 44 | 1 | 00 – 7F | SCALE TUNING D♯ | -63 – 0 – +63[cent] | 40 | O | X | O | O | O | X | O | O | O (Function) | X | O | X |
| | | 45 | 1 | 00 – 7F | SCALE TUNING E | -63 – 0 – +63[cent] | 40 | O | X | O | O | O | X | O | O | O (Function) | X | O | X |
| | | 46 | 1 | 00 – 7F | SCALE TUNING F | -63 – 0 – +63[cent] | 40 | O | X | O | O | O | X | O | O | O (Function) | X | O | X |
| | | 47 | 1 | 00 – 7F | SCALE TUNING F♯ | -63 – 0 – +63[cent] | 40 | O | X | O | O | O | X | O | O | O (Function) | X | O | X |
| | | 48 | 1 | 00 – 7F | SCALE TUNING G | -63 – 0 – +63[cent] | 40 | O | X | O | O | O | X | O | O | O (Function) | X | O | X |
| | | 49 | 1 | 00 – 7F | SCALE TUNING G♯ | -63 – 0 – +63[cent] | 40 | O | X | O | O | O | X | O | O | O (Function) | X | O | X |
| | | 4A | 1 | 00 – 7F | SCALE TUNING A | -63 – 0 – +63[cent] | 40 | O | X | O | O | O | X | O | O | O (Function) | X | O | X |
| | | 4B | 1 | 00 – 7F | SCALE TUNING A♯ | -63 – 0 – +63[cent] | 40 | O | X | O | O | O | X | O | O | O (Function) | X | O | X |
| | | 4C | 1 | 00 – 7F | SCALE TUNING B | -63 – 0 – +63[cent] | 40 | O | X | O | O | O | X | O | O | O (Function) | X | O | X |
| | | 4D | 1 | 28 – 58 | CAT PITCH CONTROL | -24 – 0 – +24[semitones] | 40 | O | X | X | O | O | X | X | O | X | X | O | X |
| | | 4E | 1 | 00 – 7F | CAT LOW PASS FILTER CONTROL | -9600 – 0 – +9450[cent] | 40 | O | X | X | O | O | X | X | O | X | X | O | X |
| | | 4F | 1 | 00 – 7F | CAT AMPLITUDE CONTROL | -100 – 0 – +100[%] | 40 | O | X | X | O | O | X | X | O | X | X | O | X |
| | | 50 | 1 | 00 – 7F | CAT LFO PMOD DEPTH | 0 – 127 | 00 | O | X | X | O | O | X | X | O | X | X | O | X |
| | | 51 | 1 | 00 – 7F | CAT LFO FMOD DEPTH | 0 – 127 | 00 | O | X | X | O | O | X | X | O | X | X | O | X |
| | | 52 | 1 | 00 – 7F | CAT LFO AMOD DEPTH | 0 – 127 | 00 | O | X | X | O | O | X | X | O | X | X | O | X |
| | | 53 | 1 | 28 – 58 | PAT PITCH CONTROL | -24 – 0 – +24[semitones] | 40 | X | X | X | X | X | X | X | X | X | X | X | X |
| | | 54 | 1 | 00 – 7F | PAT LOW PASS FILTER CONTROL | -9600 – 0 – +9450[cent] | 40 | X | X | X | X | X | X | X | X | X | X | X | X |
| | | 55 | 1 | 00 – 7F | PAT AMPLITUDE CONTROL | -100 – 0 – +100[%] | 40 | X | X | X | X | X | X | X | X | X | X | X | X |
| | | 56 | 1 | 00 – 7F | PAT LFO PMOD DEPTH | 0 – 127 | 00 | X | X | X | X | X | X | X | X | X | X | X | X |
| | | 57 | 1 | 00 – 7F | PAT LFO FMOD DEPTH | 0 – 127 | 00 | X | X | X | X | X | X | X | X | X | X | X | X |
| | | 58 | 1 | 00 – 7F | PAT LFO AMOD DEPTH | 0 – 127 | 00 | X | X | X | X | X | X | X | X | X | X | X | X |
| | | 59 | 1 | 00 – 5F | AC1 CONTROLLER NUMBER | 0 – 95 | 10 | X | X | X | X | X | X | X | X | X | X | X | X |
| | | 5A | 1 | 28 – 58 | AC1 PITCH CONTROL | -24 – 0 – +24[semitones] | 40 | X | X | X | X | X | X | X | X | X | X | X | X |
| | | 5B | 1 | 00 – 7F | AC1 LOW PASS FILTER CONTROL | -9600 – 0 – +9450[cent] | 40 | X | X | X | X | X | X | X | X | X | X | X | X |
| | | 5C | 1 | 00 – 7F | AC1 AMPLITUDE CONTROL | -100 – 0 – +100[%] | 40 | X | X | X | X | X | X | X | X | X | X | X | X |
| | | 5D | 1 | 00 – 7F | AC1 LFO PMOD DEPTH | 0 – 127 | 00 | X | X | X | X | X | X | X | X | X | X | X | X |
| | | 5E | 1 | 00 – 7F | AC1 LFO FMOD DEPTH | 0 – 127 | 00 | X | X | X | X | X | X | X | X | X | X | X | X |
| | | 5F | 1 | 00 – 7F | AC1 LFO AMOD DEPTH | 0 – 127 | 00 | X | X | X | X | X | X | X | X | X | X | X | X |
| | | 60 | 1 | 00 – 5F | AC2 CONTROLLER NUMBER | 0 – 95 | 11 | X | X | X | X | X | X | X | X | X | X | X | X |
| | | 61 | 1 | 28 – 58 | AC2 PITCH CONTROL | -24 – 0 – +24[semitones] | 40 | X | X | X | X | X | X | X | X | X | X | X | X |
| | | 62 | 1 | 00 – 7F | AC2 LOW PASS FILTER CONTROL | -9600 – 0 – +9450[cent] | 40 | X | X | X | X | X | X | X | X | X | X | X | X |
| | | 63 | 1 | 00 – 7F | AC2 AMPLITUDE CONTROL | -100 – 0 – +100[%] | 40 | X | X | X | X | X | X | X | X | X | X | X | X |
| | | 64 | 1 | 00 – 7F | AC2 LFO PMOD DEPTH | 0 – 127 | 00 | X | X | X | X | X | X | X | X | X | X | X | X |
| | | 65 | 1 | 00 – 7F | AC2 LFO FMOD DEPTH | 0 – 127 | 00 | X | X | X | X | X | X | X | X | X | X | X | X |
| | | 66 | 1 | 00 – 7F | AC2 LFO AMOD DEPTH | 0 – 127 | 00 | X | X | X | X | X | X | X | X | X | X | X | X |
| | | 67 | 1 | 00 – 01 | PORTAMENTO SWITCH | OFF, ON | 00 | O | X | X | O | O | X | X | O | X | X | O | X |
| | | 68 | 1 | 00 – 7F | PORTAMENTO TIME | 0 – 127 | 00 | O | X | X | O | O | X | X | O | X | X | O | X |
| | | 69 | 1 | 00 – 7F | PITCH EG INITIAL LEVEL | -64 – 0 – +63 | 40 | X | X | X | X | X | X | X | X | X | X | X | X |
| | | 6A | 1 | 00 – 7F | PITCH EG ATTACK TIME | -64 – 0 – +63 | 40 | X | X | X | X | X | X | X | X | X | X | X | X |
| | | 6B | 1 | 00 – 7F | PITCH EG RELEASE LEVEL | -64 – 0 – +63 | 40 | X | X | X | X | X | X | X | X | X | X | X | X |
| | | 6C | 1 | 00 – 7F | PITCH EG RELEASE TIME | -64 – 0 – +63 | 40 | X | X | X | X | X | X | X | X | X | X | X | X |
| | | 6D | 1 | 01 – 7F | VELOCITY LIMIT LOW | 1 – 127 | 01 | X | X | X | X | X | X | X | X | X | X | X | X |
| | | 6E | 1 | 01 – 7F | VELOCITY LIMIT HIGH | 1 – 127 | 7F | X | X | X | X | X | X | X | X | X | X | X | X |
| TOTAL SIZE | | | 3F | | | | | | | | | | | | | | | | |

| | | | | | | | | | | | | | | | | | | | |
|---|---|---|---|---|---|---|---|---|---|---|---|---|---|---|---|---|---|---|---|
| 08 | nn | 70 | 1 | | NOT USED | | - | - | - | - | - | - | - | - | - | - | - | - | - |
| | | 71 | 1 | | NOT USED | | - | - | - | - | - | - | - | - | - | - | - | - | - |
| | | 72 | 1 | 00 – 7F | EQ BASS GAIN | -12dB – +12dB | 40 | O (*1) | X | X | O (*1) | O (*1) | X | O (*1) | O (*1) | O (Mixing Console) (*1) | O | O | X |
| | | 73 | 1 | 00 – 7F | EQ TREBLE GAIN | -12dB – +12dB | 40 | O (*1) | X | X | O (*1) | O (*1) | X | O (*1) | O (*1) | O (Mixing Console) (*1) | O | O | X |
| TOTAL SIZE | | | 04 | | | | | | | | | | | | | | | | |

| | | | | | | | | | | | | | | | | | | | |
|---|---|---|---|---|---|---|---|---|---|---|---|---|---|---|---|---|---|---|---|
| 08 | nn | 74 | 1 | | NOT USED | | - | - | - | - | - | - | - | - | - | - | - | - | - |
| | | 75 | 1 | | NOT USED | | - | - | - | - | - | - | - | - | - | - | - | - | - |
| | | 76 | 1 | 04 – 28 | EQ BASS FREQUENCY | 32 – 2.0k[Hz] | 0C | O (*1) | X | X | O (*1) | O (*1) | X | X | O (*1) | O (Sound Creator) (*1) | X | O | X |
| | | 77 | 1 | 1C – 3A | EQ TREBLE FREQUENCY | 500 – 16.0k[Hz] | 36 | O (*1) | X | X | O (*1) | O (*1) | X | X | O (*1) | O (Sound Creator) (*1) | X | O | X |
| | | 78 | 1 | | NOT USED | | - | - | - | - | - | - | - | - | - | - | - | - | - |
| | | 79 | 1 | | NOT USED | | - | - | - | - | - | - | - | - | - | - | - | - | - |
| | | 7A | 1 | | NOT USED | | - | - | - | - | - | - | - | - | - | - | - | - | - |
| | | 7B | 1 | | NOT USED | | - | - | - | - | - | - | - | - | - | - | - | - | - |
| | | 7C | 1 | | NOT USED | | - | - | - | - | - | - | - | - | - | - | - | - | - |
| | | 7D | 1 | | NOT USED | | - | - | - | - | - | - | - | - | - | - | - | - | - |
| | | 7E | 1 | | NOT USED | | - | - | - | - | - | - | - | - | - | - | - | - | - |
| | | 7F | 1 | | NOT USED | | - | - | - | - | - | - | - | - | - | - | - | - | - |
| TOTAL SIZE | | | 0C | | | | | | | | | | | | | | | | |

nn = PART NUMBER

If there is a Drum Voice assigned to the part, the following parameters are ineffective.
- BANK SELECT LSB
- MONO/POLY MODE
- SCALE TUNING
- PORTAMENTO
- PITCH EG
- FILTER MODULATION DEPTH (FMOD DEPTH)
- AMPLITUDE MODULATION DEPTH (AMOD DEPTH)

*1 On CVP-206/204 the following parameters are not accepted, or are not transmitted by the Panel operations.
- EQ BASS GAIN
- EQ TREBLE GAIN
- EQ BASS FREQUENCY
- EQ TREBLE FREQUENCY

### MIDI Parameter Change table (A/D PART) (CVP-210/208/206 only)

| Address (H) | | | Size (H) | Data (H) | Parameter | Description | Corresponding Voice/Part | | | MIDI Reception (effective or not for each part) | | | | | MIDI Transmission (generated data) | | | |
|---|---|---|---|---|---|---|---|---|---|---|---|---|---|---|---|---|---|---|
| | | | | | | | Regular/ Organ Voice | Mic/Vocal Harmony | Natural Voice | Song | Main Layer Left | Keyboard | Style | Extra | Panel (main generation method) | Style | Song | MIDI |
| 10 | 00 | 00 | 1 | 00 – 01 | INPUT GAIN | MIC, LINE | X | X | X | X | X | X | X | X | X | X | X | X |
| | | 01 | 1 | 00 – 7F | BANK SELECT MSB | 0 – 127 | X | X | X | X | X | X | X | X | X | X | X | X |
| | | 02 | 1 | 00 – 7F | BANK SELECT LSB | 0 – 127 | X | X | X | X | X | X | X | X | X | X | X | X |
| | | 03 | 1 | 00 – 7F | PROGRAM NUMBER | 0 – 127 | X | X | X | X | X | X | X | X | X | X | X | X |
| | | 04 | 1 | 00 – 1F, 7F | Rcv CHANNEL | 1 – 16, OFF | X | O | X | X | X | X | X | X | X | X | O | X |
| | | 05 | 1 | | NOT USED | | - | - | - | - | - | - | - | - | - | - | - | - |
| | | 06 | 1 | | NOT USED | | - | - | - | - | - | - | - | - | - | - | - | - |
| | | 07 | 1 | | NOT USED | | - | - | - | - | - | - | - | - | - | - | - | - |
| | | 08 | 1 | | NOT USED | | - | - | - | - | - | - | - | - | - | - | - | - |
| | | 09 | 1 | | NOT USED | | - | - | - | - | - | - | - | - | - | - | - | - |
| | | 0A | 1 | | NOT USED | | - | - | - | - | - | - | - | - | - | - | - | - |
| | | 0B | 1 | 00-7F | VOLUME | 0 – 127 | X | O | X | X | X | X | X | X | O (Mixing Console) | X | O | X |
| | | 0C | 1 | | NOT USED | | - | - | - | - | - | - | - | - | - | - | - | - |
| | | 0D | 1 | | NOT USED | | - | - | - | - | - | - | - | - | - | - | - | - |
| | | 0E | 1 | 01-7F | PAN | L63 – C – R63 | X | O | X | X | X | X | X | X | O (Mixing Console) | X | O | X |
| | | 0F | 1 | | NOT USED | | - | - | - | - | - | - | - | - | - | - | - | - |
| | | 10 | 1 | | NOT USED | | - | - | - | - | - | - | - | - | - | - | - | - |
| | | 11 | 1 | 00-7F | DRY LEVEL | | X | O | X | X | X | X | X | X | O (Mixing Console) (CVP-206 only) | X | O | X |
| | | 12 | 1 | 00-7F | CHORUS SEND | | X | O | X | X | X | X | X | X | O (Mixing Console) | X | O | X |
| | | 13 | 1 | 00-7F | REVERB SEND | | X | O | X | X | X | X | X | X | O (Mixing Console) | X | O | X |
| | | 14 | 1 | 00-7F | VARIATION SEND | | X | O | X | X | X | X | X | X | O (Mixing Console) (CVP-206 only) | X | O | X |
| TOTAL SIZE | | | 15 | | | | | | | | | | | | | | | |

| | | | | | | | | | | | | | | | | | | |
|---|---|---|---|---|---|---|---|---|---|---|---|---|---|---|---|---|---|---|
| 10 | 0n | 30 | 1 | | NOT USED | | - | - | - | - | - | - | - | - | - | - | - | - |
| | | 31 | 1 | | NOT USED | | - | - | - | - | - | - | - | - | - | - | - | - |
| | | 32 | 1 | 00-01 | Rcv PROGRAM CHANGE | OFF, ON | X | X | X | X | X | X | X | X | X | X | X | X |
| | | 33 | 1 | 00-01 | Rcv CONTROL CHANGE | OFF, ON | X | X | X | X | X | X | X | X | X | X | X | X |
| | | 34 | 1 | | NOT USED | | - | - | - | - | - | - | - | - | - | - | - | - |
| | | 35 | 1 | 00-01 | MUTE | ON, OFF | X | X | X | X | X | X | X | X | X | X | X | X |
| | | 36 | 1 | | NOT USED | | - | - | - | - | - | - | - | - | - | - | - | - |
| | | 37 | 1 | | NOT USED | | - | - | - | - | - | - | - | - | - | - | - | - |
| | | 38 | 1 | | NOT USED | | - | - | - | - | - | - | - | - | - | - | - | - |
| | | 39 | 1 | 00-01 | Rcv VOLUME | OFF, ON | X | X | X | X | X | X | X | X | X | X | X | X |
| | | 3A | 1 | 00-01 | Rcv PAN | OFF, ON | X | X | X | X | X | X | X | X | X | X | X | X |
| | | 3B | 1 | 00-01 | Rcv EXPRESSION | OFF, ON | X | X | X | X | X | X | X | X | X | X | X | X |
| | | 3C | 1 | | NOT USED | | - | - | - | - | - | - | - | - | - | - | - | - |
| | | 3D | 1 | | NOT USED | | - | - | - | - | - | - | - | - | - | - | - | - |
| | | 3E | 1 | | NOT USED | | - | - | - | - | - | - | - | - | - | - | - | - |
| | | 3F | 1 | | NOT USED | | - | - | - | - | - | - | - | - | - | - | - | - |
| | | 40 | 1 | 00-01 | Rcv BANK SELECT | OFF, ON | X | X | X | X | X | X | X | X | X | X | X | X |
| | | 41 | 1 | | NOT USED | | - | - | - | - | - | - | - | - | - | - | - | - |
| | | 42 | 1 | | NOT USED | | - | - | - | - | - | - | - | - | - | - | - | - |
| | | 43 | 1 | | NOT USED | | - | - | - | - | - | - | - | - | - | - | - | - |
| | | 44 | 1 | | NOT USED | | - | - | - | - | - | - | - | - | - | - | - | - |
| | | 45 | 1 | | NOT USED | | - | - | - | - | - | - | - | - | - | - | - | - |
| | | 46 | 1 | | NOT USED | | - | - | - | - | - | - | - | - | - | - | - | - |
| | | 47 | 1 | | NOT USED | | - | - | - | - | - | - | - | - | - | - | - | - |
| | | 48 | 1 | | NOT USED | | - | - | - | - | - | - | - | - | - | - | - | - |
| | | 49 | 1 | | NOT USED | | - | - | - | - | - | - | - | - | - | - | - | - |
| | | 4A | 1 | | NOT USED | | - | - | - | - | - | - | - | - | - | - | - | - |
| | | 4B | 1 | | NOT USED | | - | - | - | - | - | - | - | - | - | - | - | - |
| | | 4C | 1 | | NOT USED | | - | - | - | - | - | - | - | - | - | - | - | - |
| | | 4D | 1 | | NOT USED | | - | - | - | - | - | - | - | - | - | - | - | - |
| | | 4E | 1 | | NOT USED | | - | - | - | - | - | - | - | - | - | - | - | - |
| | | 4F | 1 | | NOT USED | | - | - | - | - | - | - | - | - | - | - | - | - |
| | | 50 | 1 | | NOT USED | | - | - | - | - | - | - | - | - | - | - | - | - |
| | | 51 | 1 | | NOT USED | | - | - | - | - | - | - | - | - | - | - | - | - |
| | | 52 | 1 | | NOT USED | | - | - | - | - | - | - | - | - | - | - | - | - |
| | | 53 | 1 | | NOT USED | | - | - | - | - | - | - | - | - | - | - | - | - |
| | | 54 | 1 | | NOT USED | | - | - | - | - | - | - | - | - | - | - | - | - |
| | | 55 | 1 | | NOT USED | | - | - | - | - | - | - | - | - | - | - | - | - |
| | | 56 | 1 | | NOT USED | | - | - | - | - | - | - | - | - | - | - | - | - |
| | | 57 | 1 | | NOT USED | | - | - | - | - | - | - | - | - | - | - | - | - |
| | | 58 | 1 | | NOT USED | | - | - | - | - | - | - | - | - | - | - | - | - |
| | | 59 | 1 | 00 – 5F | AC1 CONTROLLER NUMBER | 0 – 95 | X | X | X | X | X | X | X | X | X | X | X | X |
| | | 5A | 1 | | NOT USED | | - | - | - | - | - | - | - | - | - | - | - | - |
| | | 5B | 1 | | NOT USED | | - | - | - | - | - | - | - | - | - | - | - | - |
| | | 5C | 1 | | NOT USED | | - | - | - | - | - | - | - | - | - | - | - | - |
| | | 5D | 1 | | NOT USED | | - | - | - | - | - | - | - | - | - | - | - | - |
| | | 5E | 1 | | NOT USED | | - | - | - | - | - | - | - | - | - | - | - | - |
| | | 5F | 1 | | NOT USED | | - | - | - | - | - | - | - | - | - | - | - | - |
| | | 60 | 1 | 00 – 5F | AC2 CONTROLLER NUMBER | 0 – 95 | X | X | X | X | X | X | X | X | X | X | X | X |
| TOTAL SIZE | | | 31 | | | | | | | | | | | | | | | |

The A/D PART Parameter cannot be reset to its factory setting with XG SYSTEM ON.

### MIDI Parameter Change table (DRUM SETUP)

| Address (H) | | | Size (H) | Data (H) | Parameter | Description | XG Default (H) | Corresponding Voice/Part | | | MIDI Reception (effective or not for each part) | | | | | MIDI Transmission (generated data) | | | |
|---|---|---|---|---|---|---|---|---|---|---|---|---|---|---|---|---|---|---|---|
| | | | | | | | | Regular/ Organ Voice | Mic/Vocal Harmony | Natural Voice | Song | Main Layer Left | Keyboard | Style | Extra | Panel (main generation method) | Style | Song | MIDI |
| 3n | rr | 00 | 1 | 00 – 7F | PITCH COARSE | -64 – 0 – +63 | 40 | O (Drum only) | X | X | O | X | X | X | X | X | X | O | O | X |
| | | 01 | 1 | 00 – 7F | PITCH FINE | -64 – 0 – +63[cent] | 40 | O (Drum only) | X | X | O | X | X | X | X | X | X | O | O | X |
| | | 02 | 1 | 00 – 7F | LEVEL | 0 – 127 | Depends on the note | O (Drum only) | X | X | O | X | X | X | X | X | X | O | O | X |
| | | 03 | 1 | 00 – 7F | ALTERNATE GROUP | OFF, 1 – 127 | Depends on the note | O (Drum only) | X | X | O | X | X | X | X | X | X | X | O | X |
| | | 04 | 1 | 00 – 7F | PAN | RND, L63 – C – R63 | Depends on the note | O (Drum only) | X | X | O | X | X | X | X | X | X | O | O | X |
| | | 05 | 1 | 00 – 7F | REVERB SEND | 0 – 127 | Depends on the note | O (Drum only) | X | X | O | X | X | X | X | X | X | O | O | X |
| | | 06 | 1 | 00 – 7F | CHORUS SEND | 0 – 127 | Depends on the note | O (Drum only) | X | X | O | X | X | X | X | X | X | O | O | X |

| Address (H) | | | Size (H) | Data (H) | Parameter | Description | XG Default (H) | Corresponding Voice/Part | | | MIDI Reception (effective or not for each part) | | | | | MIDI Transmission (generated data) | | | |
|---|---|---|---|---|---|---|---|---|---|---|---|---|---|---|---|---|---|---|---|
| | | | | | | | | Regular/ Organ Voice | Mic/Vocal Harmony | Natural Voice | Song | Main Layer Left | Keyboard | Style | Extra | Panel (main generation method) | Style | Song | MIDI |
| | | 07 | 1 | 00 – 7F | VARIATION SEND | 0 – 127 | 7F | O (Drum only) | X | X | O | X | X | X | X | X | O | O | X |
| | | 08 | 1 | 00 – 01 | KEY ASSIGN | SINGLE, MULTI | 00 | O (Drum only) | X | X | O | X | X | X | X | X | X | O | X |
| | | 09 | 1 | 00 – 01 | Rcv NOTE OFF | OFF, ON | Depends on the note | O (Drum only) | X | X | O | X | X | X | X | X | X | O | X |
| | | 0A | 1 | 00 – 01 | Rcv NOTE ON | OFF, ON | 01 | O (Drum only) | X | X | O | X | X | X | X | X | X | O | X |
| | | 0B | 1 | 00 – 7F | LOW PASS FILTER CUTOFF FREQUENCY | -64 – 0 – +63 | 40 | O (Drum only) | X | X | O | X | X | X | X | X | O | O | X |
| | | 0C | 1 | 00 – 7F | LOW PASS FILTER RESONANCE | -64 – 0 – +63 | 40 | O (Drum only) | X | X | O | X | X | X | X | X | O | O | X |
| | | 0D | 1 | 00 – 7F | EG ATTACK RATE | -64 – 0 – +63 | 40 | O (Drum only) | X | X | O | X | X | X | X | X | O | O | X |
| | | 0E | 1 | 00 – 7F | EG DECAY1 RATE | -64 – 0 – +63 | 40 | O (Drum only) | X | X | O | X | X | X | X | X | O | O | X |
| | | 0F | 1 | 00 – 7F | EG DECAY2 RATE | -64 – 0 – +63 | 40 | O (Drum only) | X | X | O | X | X | X | X | X | O | O | X |
| TOTAL SIZE | | | 10 | | | | | | | | | | | | | | | | |

| | | | | | | | | | | | | | | | | | | | |
|---|---|---|---|---|---|---|---|---|---|---|---|---|---|---|---|---|---|---|---|
| | | 20 | 1 | 00 – 7F | EQ BASS GAIN | -12 – +12[dB] | 40 | X | X | X | X | X | X | X | X | X | X | X | X |
| | | 21 | 1 | 00 – 7F | EQ TREBLE GAIN | -12 – +12[dB] | 40 | X | X | X | X | X | X | X | X | X | X | X | X |
| | | 22 | 1 | | NOT USED | | - | - | - | - | - | - | - | - | - | - | - | - | - |
| | | 23 | 1 | | NOT USED | | - | - | - | - | - | - | - | - | - | - | - | - | - |
| | | 24 | 1 | 04 – 28 | EQ BASS FREQUENCY | 32 – 2.0k[Hz] | 0C | X | X | X | X | X | X | X | X | X | X | X | X |
| | | 25 | 1 | 1C – 3A | EQ TREBLE FREQUENCY | 500 – 16.0k[Hz] | 36 | X | X | X | X | X | X | X | X | X | X | X | X |
| | | 26 | 1 | | NOT USED | | - | - | - | - | - | - | - | - | - | - | - | - | - |
| | | 27 | 1 | | NOT USED | | - | - | - | - | - | - | - | - | - | - | - | - | - |
| | | 28 | 1 | | NOT USED | | - | - | - | - | - | - | - | - | - | - | - | - | - |
| | | 29 | 1 | | NOT USED | | - | - | - | - | - | - | - | - | - | - | - | - | - |
| | | 2A | 1 | | NOT USED | | - | - | - | - | - | - | - | - | - | - | - | - | - |
| | | 2B | 1 | | NOT USED | | - | - | - | - | - | - | - | - | - | - | - | - | - |
| | | 2C | 1 | | NOT USED | | - | - | - | - | - | - | - | - | - | - | - | - | - |
| | | 2D | 1 | | NOT USED | | - | - | - | - | - | - | - | - | - | - | - | - | - |
| TOTAL SIZE | | | 0E | | | | | | | | | | | | | | | | |

n: Drum Setup Number (0 – 1)
rr: note number (0D – 5B)

In the following cases, the Clavinova will initialize all Drum Setups.
XG SYSTEM ON received
GM SYSTEM ON received
DRUM SETUP RESET received (only when in XG mode)

[Note]
When a part to which a Drum Setup is assigned receives a program change, the assigned Drum Setup will be initialized.
If the same Drum Setup is assigned to two or more parts, changes in Drum Setup parameters (including program changes) will apply to all parts to which it is assigned.

# SYSTEM EXCLUSIVE MESSAGES

* Not received when the Receive System Exclusive Message is set to off.
* Not transmitted when the Transmit System Exclusive Message is set to off.

## System Exclusive Messages

O: available

| MIDI Event | Data Format | Corresponding Voice/Part | | | MIDI Reception (effective or not for each part) | | | | | MIDI Reception (affecting the panel) | MIDI Transmission (generated data) | | | |
|---|---|---|---|---|---|---|---|---|---|---|---|---|---|---|
| | | Regular/ Organ Voice | Mic/Vocal Harmony | Natural Voice | Song | Main Layer Left | Keyboard | Style | Extra | | Panel (main generation method) | Style | Song | MIDI |
| Section Control | F0 43 7E 00 ss dd F7<br>11110000 F0 = Exclusive status<br>01000011 43 = YAMAHA ID<br>01111110 7E = Style<br>00000000 00 =<br>0sssssss ss = Switch No.<br>00H INTRO A<br>01H INTRO B<br>02H INTRO C<br>03H INTRO D<br>08H MAIN A<br>09H MAIN B<br>0AH MAIN C<br>0BH MAIN D<br>10H FILL IN AA<br>11H FILL IN BB<br>12H FILL IN CC<br>13H FILL IN DD<br>18H BREAK FILL<br>20H ENDING A<br>21H ENDING B<br>22H ENDING C<br>23H ENDING D<br>0ddddddd dd = Switch On/Off<br>00H (Off)<br>7HF (On)<br>11110111 F7 = End of Exclusive | - | - | - | - | - | - | - | - | O (Section LED) | O (Section Sw) | X | O | X |
| Tempo Control | F0 43 7E 01 t4 t3 t2 t1 F7<br>11110000 F0 = Exclusive status<br>01000011 43 = YAMAHA ID<br>01111110 7E = Style<br>00000001 01 =<br>0ttttttt t4 = tempo4<br>0ttttttt t3 = tempo3<br>0ttttttt t2 = tempo2<br>0ttttttt t1 = tempo1<br>11110111 F7 = End of Exclusive | - | - | - | - | - | - | - | - | O (Tempo indication) | O (Tempo Sw) | X | O | X |
| Chord Control | F0 43 7E tt d1 d2 d3 d4 F7<br>Type 1 (tt=2)<br>11110000 F0 = Exclusive status<br>01000011 43 = YAMAHA ID<br>01111110 7E = Style<br>00000010 02 = type 1<br>0ddddddd d1 = chord root(cr)<br>0ddddddd d2 = chord type(ct)<br>0ddddddd d3 = bass note(bn)<br>0ddddddd d4 = bass type(bt)<br>11110111 F7 = End of Exclusive<br><br>cr: Chord Root 0fffnnnn<br>fff: b or #, nnn: note(root)<br>0000nnnn 0n bbb 0fff0000 x0 reserved<br>0001nnnn 1n bb 0fff0001 x1 C<br>0010nnnn 2n b 0fff0010 x2 D<br>0011nnnn 3n natural 0fff0011 x3 E<br>0100nnnn 4n # 0fff0100 x4 F<br>0101nnnn 5n ## 0fff0101 x5 G<br>0110nnnn 6n ### 0fff0110 x6 A<br>0fff0111 x7 B<br><br>ct: Chord Type 0 – 34,127<br>00000000 00 0 Maj 00010010 12 18 dim7<br>00000001 01 1 Maj6 00010011 13 19 7th<br>00000010 02 2 Maj7 00010100 14 20 7sus4<br>00000011 03 3 Maj7(#11) 00010101 15 21 7b5<br>00000100 04 4 Maj(9) 00010110 16 22 7(9)<br>00000101 05 5 Maj7(9) 00010111 17 23 7(#11)<br>00000110 06 6 Maj6(9) 00011000 18 24 7(13)<br>00000111 07 7 aug 00011001 19 25 7(b9)<br>00001000 08 8 min 00011010 1A 26 7(b13)<br>00001001 09 9 min6 00011011 1B 27 7(#9)<br>00001010 0A 10 min7 00011100 1C 28 Maj7aug<br>00001011 0B 11 min7b5 00011101 1D 29 7aug<br>00001100 0C 12 min(9) 00011110 1E 30 1+8<br>00001101 0D 13 min7(9) 00011111 1F 31 1+5<br>00001110 0E 14 min7(11) 00100000 20 32 sus4<br>00001111 0F 15 minMaj7 00100001 21 33 1+2+5<br>00010000 10 16 minMaj7(9) 00100010 22 34 cc<br>00010001 11 17 dim<br><br>bn : On Bass Chord Same as Chord root<br>127: No bass chord<br>bt : Bass Chord Same as Chord type<br>127: No bass chord<br><br>* Not received when Receive Chord System Exclusive Message is set to off.<br>* Not transmitted when Transmit Chord System Exclusive Message is set to on. | - | - | - | - | - | - | - | - | O (Chord indication) | O (Keyboard) | X | O | X |
| | Type2 (tt=3)<br>11110000 F0 = Exclusive status<br>01000011 43 = YAMAHA ID<br>01111110 7E = Style<br>00000011 03 = type 2<br>0ddddddd dd = note1<br>0ddddddd dd = note2<br>0ddddddd dd = note3<br>: :<br>0ddddddd dd = ... note10<br>11110111 F7 = End of Exclusive | - | - | - | - | - | - | - | - | O (Chord indication) | X | X | X | X |

## System Exclusive Messages (Universal Realtime messages)

| MIDI Event | Data Format | Corresponding Voice/Part | | | MIDI Reception (effective or not for each part) | | | | | MIDI Reception (affecting the panel) | MIDI Transmission (generated data) | | | |
|---|---|---|---|---|---|---|---|---|---|---|---|---|---|---|
| | | Regular/ Organ Voice | Mic/Vocal Harmony | Natural Voice | Song | Main Layer Left | Keyboard | Style | Extra | | Panel (main generation method) | Style | Song | MIDI |
| Master Volume | F0 7F 7F 04 01 ll mm F7<br>11110000 F0 = Exclusive status<br>01111111 7F = Universal Real Time<br>01111111 7F = ID of target device<br>00000100 04 = Sub-ID #1=Device Control Message<br>00000001 01 = Sub-ID #2=Master Volume<br>0lllllll ll = Volume LSB<br>0mmmmmmm mm= Volume MSB<br>11110111 F7 = End of Exclusive<br>or<br>F0 7F XN 04 01 ll mm F7<br>11110000 F0 = Exclusive status<br>01111111 7F = Universal Real Time<br>0xxxnnnn XN = When N is received N=0 – F, whichever is received. X=ignored<br>00000100 04 = Sub-ID #1=Device Control Message<br>00000001 01 = Sub-ID #2=Master Volume<br>0lllllll ll = Volume LSB<br>0mmmmmmm mm= Volume MSB<br>11110111 F7 = End of Exclusive | O | - | O | O | X | X | X | X | X | X | X | X (Output as XG Master Volume ) | X |

## System Exclusive Messages (Universal Non Realtime messages)

| MIDI Event | Data Format | Corresponding Voice/Part | | | MIDI Reception (effective or not for each part) | | | | | MIDI Reception (affecting the panel) | MIDI Transmission (generated data) | | | |
|---|---|---|---|---|---|---|---|---|---|---|---|---|---|---|
| | | Regular/ Organ Voice | Mic/Vocal Harmony | Natural Voice | Song | Main Layer Left | Keyboard | Style | Extra | | Panel (main generation method) | Style | Song | MIDI |
| General MIDI System On | F0 7E 7F 09 01 F7<br>11110000 F0 = Exclusive status<br>01111110 7E = Universal Non-Real Time<br>01111111 7F = ID of target device<br>00001001 09 = Sub-ID #1=General MIDI Message<br>00000001 01 = Sub-ID #2=General MIDI On<br>11110111 F7 = End of Exclusive<br>or<br>F0 7E XN 09 01 F7<br>11110000 F0 = Exclusive status<br>01111110 7E = Universal Non-Real Time<br>0xxxnnnn XN = When N is received N=0 – F,whichever is received. X=ignored<br>00001001 09 = Sub-ID #1=General MIDI Message<br>00000001 01 = Sub-ID #2=General MIDI On<br>11110111 F7 = End of Exclusive | O | - | O | O | X | X | X | O | O (Mixing Console) | X | X | O | X |

## System Exclusive Messages (XG)

| MIDI Event | Data Format | Corresponding Voice/Part | | | MIDI Reception (effective or not for each part) | | | | | MIDI Reception (affecting the panel) | MIDI Transmission (generated data) | | | |
|---|---|---|---|---|---|---|---|---|---|---|---|---|---|---|
| | | Regular/ Organ Voice | Mic/Vocal Harmony | Natural Voice | Song | Main Layer Left | Keyboard | Style | Extra | | Panel (main generation method) | Style | Song | MIDI |
| XG Parameter Change | F0 43 1n 4C hh mm ll dd ... F7<br>11110000 F0 = Exclusive status<br>01000011 43 = YAMAHA ID<br>0001nnnn 1n = Device Number n=always 0 (when transmit), n=0 – F (when recieve)<br>01001100 4C = Model ID<br>0hhhhhhh hh = Address High<br>0mmmmmmm mm= Address Mid<br>0lllllll ll = Address Low<br>0ddddddd dd = Data<br>: :<br>11110111 F7 = End of Exclusive | *Refer to Parameter Change Table | | | *Refer to Parameter Change Table | | | | | - | *Refer to Parameter Change Table | | | O (When receiving the XG Parameter Request) |
| XG Bulk Dump | F0 43 0n 4C aa bb hh mm ll dd ... dd cc F7<br>11110000 F0 = Exclusive status<br>01000011 43 = YAMAHA ID<br>0000nnnn 0n = Device Number n=always 0 (when transmit), n=0 – F (when recieve)<br>01001100 4C = Model ID<br>0aaaaaaa aa = Byte Count MSB<br>0bbbbbbb bb = Byte Count LSB<br>0hhhhhhh hh = Address High<br>0mmmmmmm mm= Address Mid<br>0lllllll ll = Address Low<br>0ddddddd dd = Data<br>: :<br>0ddddddd dd = Data<br>0ccccccc cc = Checksum<br>11110111 F7 = End of Exclusive | *Refer to Parameter Change Table | | | *Refer to Parameter Change Table | | | | | - | X | X | X (Output as Parameter Change ) | O (When receiving the XG Dump Request) |
| XG Parameter Request | F0 43 3n 4C hh ll F7<br>11110000 F0 = Exclusive status<br>01000011 43 = YAMAHA ID<br>0011nnnn 3n = Device Number n=always 0 (when transmit), n=0 – F (when recieve)<br>01001100 4C = Model ID<br>0hhhhhhh hh = Address High<br>0mmmmmmm mm= Address Mid<br>0lllllll ll = Address Low<br>11110111 F7 = End of Exclusive | - | - | - | - | - | - | - | - | O (-) | X | X | X | X |
| XG Dump Request | F0 43 2n 4C hh mm ll F7<br>11110000 F0 = Exclusive status<br>01000011 43 = YAMAHA ID<br>0010nnnn 2n = Device Number n=always 0 (when transmit), n=0 – F (when recieve)<br>01001100 4C = Model ID<br>0hhhhhhh hh = Address High<br>0mmmmmmm mm= Address Mid<br>0lllllll ll = Address Low<br>11110111 F7 = End of Exclusive | - | - | - | - | - | - | - | - | O (-) | X | X | X | X |

## System Exclusive Messages (Clavinova compliance)

```
11110000 F0 = Exclusive status
01000011 43 = YAMAHA ID
01110011 73 = Clavinova ID
    :            :
11110111 F7 = End of Exclusive
```

| MIDI Event | Data Format | Corresponding Voice/Part | | | MIDI Reception (effective or not for each part) | | | | | MIDI Reception (affecting the panel) | MIDI Transmission (generated data) | | | |
|---|---|---|---|---|---|---|---|---|---|---|---|---|---|---|
| | | Regular/ Organ Voice | Mic/Vocal Harmony | Natural Voice | Song | Main Layer Left | Keyboard | Style | Extra | | Panel (main generation method) | Style | Song | MIDI |
| Internal Clock | F0 43 73 01 02 F7<br>00000001 01 = Model ID (Clavinova common ID)<br>00000010 02 = Internal Clock Substatus | - | - | - | X | X | X | X | X | O (Function) | X | X | X | X |
| External Clock | F0 43 73 01 03 F7<br>00000001 01 = Model ID (Clavinova common ID)<br>00000011 03 = External Clock Substatus | - | - | - | X | X | X | X | X | O (Function) | X | X | X | X |
| Organ Flutes data Bulk Dump (CVP-210/ 208 only) | F0 43 73 01 06 0B 00 00 01 06 0n [Bulk Data] sum F7<br>01H Model ID (Clavinova common ID)<br>06H Bulk ID<br>0BH Bulk No. (Organ Flutes data Bulk Dump)<br>00H, 00H, 01H, 06H Data Length: 16bytes<br><br>1st Channel No. 0nH<br>2nd Footage [1'] 00 – mmH mm : maximum<br>3rd [1 1/3'] 00 – mmH<br>4th [1 3/5'] 00 – mmH (*CVP-210 only)<br>5th [2'] 00 – mmH<br>6th [2 2/3'] 00 – mmH<br>7th [4'] 00 – mmH<br>8th [5 1/3'] 00 – mmH<br>9th [8'] 00 – mmH<br>10th [16'] 00 – mmH<br>11th [Attack 2'] 00 – mmH<br>12th [Attack 2 2/3'] 00 – mmH<br>13th [Attack 4'] 00 – mmH<br>14th Settings [Attack Length] 00 – mmH<br>15th [Response] 00 – mmH<br>16th [Attack Mode] 00 – 01H 00H: Each, 01H: First<br>17th [Wave Variation] 00 – 01H 00H: Sine, 01H: Tone Wheel<br>18th [Volume] 01 – vvH vv: maximum<br>19th [aux] 00H<br>20th [aux] 00H<br>21th [aux] 00H<br>22th [aux] 00H<br>sum Check Sum = 0 – sum(BULK DATA)<br>CVP-210: mm=8, vv=8<br>CVP-208: mm=7, vv=9 | O (Organ Flute) | X | X | O | O | X | X | O | O (Sound Creator) | O (Sound Creator) | X | O | X |
| Natural Voice Reverb Type | F0 43 73 01 31 0n 00 dd F7<br>00000001 01 = Model ID (Clavinova common ID)<br>00110001 31 = Natural Voice Exclusive data<br>0000nnnn 0n = Channel No. (Always 00)<br>00000000 00 = Natural Voice Reverb Type Substatus<br>0ddddddd dd = data (0: Room, 1: Hall1, 2: Hall2, 3: Stage, 4: Plate) | X | X | O | O | | | | | O (Sound Creator) | O (Sound Creator) | O | O | X |
| Natural Voice Chorus Type | F0 43 73 01 31 0n 01 dd F7<br>00000001 01 = Model ID (Clavinova common ID)<br>00110001 31 = Natural Voice Exclusive data<br>0000nnnn 0n = Channel No. (Always 00)<br>00000001 01 = Natural Voice Chorus Type Substatus<br>0ddddddd dd = data (0: Chorus,1: Celeste, 2: Flanger) | X | X | O | O | | | | | O (Sound Creator) | O (Sound Creator) | O | O | X |
| Natural Voice Variation Type | F0 43 73 01 31 0n 02 dd F7<br>00000001 01 = Model ID (Clavinova common ID)<br>00110001 31 = Natural Voice Exclusive data<br>0000nnnn 0n = Channel No. (Always 00)<br>00000010 02 = Natural Voice Variation Type Substatus<br>0ddddddd dd = data (00H: DelayLCR, 01H: DelayLR, 02H: Echo,<br>03H: CrossDelay, 04H: Symphonic,<br>05H: RotarySpeaker, 06H:Tremolo, 07H: VibeRotor,<br>08H: AutoPan, 09H: Phaser, 0AH: AutoWah,<br>0BH: SoundBoardRev, 0CH: Off) | X | X | O | O | | | | | O (Sound Creator) | O (Sound Creator) | O | O | X |
| Natural Voice Vibe Rotor Control | F0 43 73 01 31 0n 08 dd F7<br>00000001 01 = Model ID (Clavinova common ID)<br>00110001 31 = Natural Voice Exclusive data<br>0000nnnn 0n = Channel No. (Always 00)<br>00001000 08 = Natural Voice Vibe Rotor Control Substatus<br>0ddddddd dd = data (00H:Off, 7FH:On) | X | X | O (If the Type is set to Vibe Rotor) | O | | | | | O (Sound Creator) | O (Sound Creator) | X | O | X |
| Natural Voice Variation Send Level | F0 43 73 01 50 11 0n 00 dd F7<br>00000001 01 = Model ID (Clavinova common ID)<br>01010000 50 = Common Model data<br>00010001 11 = Song Track related<br>0000nnnn 0n = Channel No.<br>00000000 00 = Natural Voice Variation Send Level Substatus<br>0ddddddd dd = data (00H – 7FH) | X | X | O | O | O | X | O | O | O (Mixing Console) | O (Mixing Console) | O | O | X |
| Natural Voice Dry Level | F0 43 73 01 50 11 0n 01 dd F7<br>00000001 01 = Model ID (Clavinova common ID)<br>01010000 50 = Common Model data<br>00010001 11 = Song Track related<br>0000nnnn 0n = Channel No.<br>00000001 01 = Natural Voice Dry Level Substatus<br>0ddddddd dd = data (00H – 7FH) | X | X | O | O | O | X | O | O | O (Mixing Console) | O (Mixing Console) | O | O | X |

## System Exclusive Messages Special Operators

| MIDI Event | Data Format | Corresponding Voice/Part | | | MIDI Reception (effective or not for each part) | | | | | MIDI Reception (affecting the panel) | MIDI Transmission (generated data) | | | |
|---|---|---|---|---|---|---|---|---|---|---|---|---|---|---|
| | | Regular/ Organ Voice | Mic/Vocal Harmony | Natural Voice | Song | Main Layer Left | Keyboard | Style | Extra | | Panel (main generation method) | Style | Song | MIDI |
| Volume & Expression & Pan Realtime control off (Voice Reserve) | F0 43 73 01 11 0n 45 dd F7<br>11110000 F0 = Exclusive status<br>01000011 43 = YAMAHA ID<br>01110011 73 = Clavinova ID<br>00000001 01 = Model ID (Clavinova common ID)<br>00010001 11 = Special Operators<br>0000nnnn 0n = Channel No.<br>01000101 45 = Volume & Expression Control No. Substatus<br>0ddddddd dd = data (00H : Realtime On, 7FH : Realtime Off)<br>11110111 F7 = End of Exclusive | O | - | O | O | X | X | X | X | X | X | X | O | X |
| MIDI Key LED Mode On/Off | F0 43 73 01 11 0n 47 dd F7<br>11110000 F0 = Exclusive status<br>01000011 43 = YAMAHA ID<br>01110011 73 = Clavinova ID<br>00000001 01 = Model ID (Clavinova common ID)<br>00010001 11 = Special Operators<br>0000nnnn 0n = Channel No.<br>01000111 47 = MIDI Key LED Mode On Off Substatus<br>0ddddddd dd = data 00H : Key LED Mode Off<br>01H : Key LED Mode On+no notes sound<br>02H : Key LED Mode On+notes sound<br>11110111 F7 = End of Exclusive<br><br>When Key LED Mode is set to On, key note on messages via designated channnel turns the LED on/off.<br>9n, note, Vel=0 : off<br>9n, note, Vel=1 : flush<br>9n, note, Vel=2 – : on<br><br>When selecting whether notes sound or not, you should turn off the Key LED Mode once. | - | - | - | - | - | - | - | - | O (Keyboard LED lights when receiving the note messages) | X | X | X | X |

## System Exclusive Messages Special Operators (Vocal Harmony Additional Parameters)

| MIDI Event | Data Format | Corresponding Voice/Part | | | MIDI Reception (effective or not for each part) | | | | | MIDI Reception (affecting the panel) | MIDI Transmission (generated data) | | | |
|---|---|---|---|---|---|---|---|---|---|---|---|---|---|---|
| | | Regular/ Organ Voice | Mic/Vocal Harmony | Natural Voice | Song | Main Layer Left | Keyboard | Style | Extra | | Panel (main generation method) | Style | Song | MIDI |
| Vocal Harmony Pitch to Note ON/OFF (CVP-210/ 208 only) | F0 43 73 01 11 0n 50 00 ss F7<br>11110000 F0 = Exclusive status<br>01000011 43 = YAMAHA ID<br>01110011 73 = Clavinova ID<br>00000001 01 = Model ID (Clavinova common ID)<br>00010001 11 = Special Operators<br>0000nnnn 0n = Channel No. (Always 00)<br>01010000 50 = Vocal Harmony Additional Parameter Control No.<br>00000000 00 = Pitch to Note Parameter No.<br>0ddddddd dd = data (00H: Off, 01H: On)<br>11110111 F7 = End of Exclusive | X | O | X | X | X | X | X | X | O (Vocal Harmony Edit) | O (Vocal Harmony Edit) | X | O | X |
| Vocal Harmony Pitch to Note Part (CVP-210/ 208 only) | F0 43 73 01 11 00 50 01 ss F7<br>11110000 F0 = Exclusive status<br>01000011 43 = YAMAHA ID<br>01110011 73 = Clavinova ID<br>00000001 01 = Model ID (Clavinova common ID)<br>00010001 11 = Special Operators<br>0000nnnn 0n = Channel No. (Always 00)<br>01010000 50 = Vocal Harmony Additional Parameter Control No.<br>00000001 01 = Pitch to Note Part Parameter No.<br>0ddddddd dd = data 00H: Main<br>01H: Layer<br>02H: Left<br>04H: Upper<br>11110111 F7 = End of Exclusive | X | O | X | X | X | X | X | X | O (Vocal Harmony Edit) | O (Vocal Harmony Edit) | X | O | X |
| Vocal Harmony Vocoder Part (Harmony Part (Panel)) (CVP-210/ 208 only) | F0 43 73 01 11 00 50 10 ss F7<br>11110000 F0 = Exclusive status<br>01000011 43 = YAMAHA ID<br>01110011 73 = Clavinova ID<br>00000001 01 = Model ID (Clavinova common ID)<br>00010001 11 = Special Operators<br>0000nnnn 0n = Channel No. (Always 00)<br>01010000 50 = Vocal Harmony Additional Parameter Control No.<br>00010000 10 = Vocoder Part Parameter No.<br>0ddddddd dd = data 00H: Off<br>01H: Upper<br>02H: Lower<br>11110111 F7 = End of Exclusive | X | O | X | X | X | X | X | X | O (Mic Setting) | O (Mic Setting) | X | O | X |

## System Exclusive Messages (Others)

| MIDI Event | Data Format | Corresponding Voice/Part | | | MIDI Reception (effective or not for each part) | | | | | MIDI Reception (affecting the panel) | MIDI Transmission (generated data) | | | |
|---|---|---|---|---|---|---|---|---|---|---|---|---|---|---|
| | | Regular/ Organ Voice | Mic/Vocal Harmony | Natural Voice | Song | Main Layer Left | Keyboard | Style | Extra | | Panel (main generation method) | Style | Song | MIDI |
| MIDI Master Tuning | F0 43 1n 27 30 00 00 mm ll cc F7<br>11110000 F0 = Exclusive status<br>01000011 43 = YAMAHA ID<br>0001nnnn 1n n= always 0(when transmit), n=0 – F(when receive)<br>00100111 27 = Model ID of TG100<br>00110000 30 = Address High<br>00000000 00 = Address Mid<br>00000000 00 = Address Low<br>0000mmmm 0m = Master Tune MSB<br>0000llll 0l = Master Tune LSB<br>0ccccccc cc = don't care<br>11110111 F7 = End of Exclusive | O | X | O | O | | | | | O (Function) | X | X | X | X |

Clavinova®

# CVP-206/CVP-206M/CVP-206C

# PARTS LIST

## ■ CONTENTS（目次）


OVERALL ASSEMBLY（総組立）..... 2
MAIN UNIT（メインユニット）..... 5
PANEL ASSEMBLY（パネル Ass'y）..... 10
GL CASE ASSEMBLY（GL ケース Ass'y）..... 13
LCD ASSEMBLY（LCD Ass'y）..... 14
TOP BOARD ASSEMBLY（屋根 Ass'y）..... 15
MUSIC REST ASSEMBLY（譜面板 Ass'y）..... 16
KEY COVER ASSEMBLY
（スライド蓋 Ass'y）..... 17
ARM ASSEMBLY（腕木 Ass'y）..... 18
MIC. & PHONES UNIT
（MIC-HPJ ユニット）..... 20
JACK UNIT（ジャックユニット）..... 21
SIDE BOARD ASSEMBLY（側板 Ass'y）..... 22
PEDAL BOX ASSEMBLY
（ペダル Box Ass'y）..... 24
PEDAL ASSEMBLY（ペダル Ass'y（H））..... 25
FRONT BOARD ASSEMBLY（前板 Ass'y）..... 26
MA60 ASSEMBLY（MA60 Ass'y）..... 27
FU ASSEMBLY（FU Ass'y）..... 28
FU60 ASSEMBLY（FU60 Ass'y）..... 29
KEYBOARD ASSEMBLY
（GHD 鍵盤 Ass'y）..... 30
FDD UNIT（FDD ユニット）..... 32
BENCH (BC-201DR)
（椅子）..... 33
BENCH (BC-102DR/BC-102MH/BC-102CH)
（椅子）..... 34
BENCH (BC-100DR/BC-100MH/BC-100CH)
（椅子）..... 35
ELECTRICAL PARTS（電気部品）..... 36~53


**Notes : DESTINATION ABBREVIATIONS**

| | |
|---|---|
| A : Australian model | M : South African model |
| B : British model | O : Chinese model |
| C : Canadian model | Q : South-east Asia model |
| D : German model | T : Taiwan model |
| E : European model | U : U.S.A. model |
| F : French model | V : General export model (110V) |
| H : North European model | W: General export model (220V) |
| I : Indonesian model | N,X: General export model |
| J : Japanese model | Y : Export model |
| K : Korean model | |

## ■ WARNING

Components having special characteristics are marked ⚠ and must be replaced with parts having specification equal to those originally installed.

**⚠ 印の部品は、安全を維持するために重要な部品です。交換する場合は、安全のために必ず指定の部品をご使用ください。**

- The numbers "QTY" show quantities for each unit.
- The parts with "--" in "**PART NO.**" are not available as spare parts.
- This mark " } " in the REMARKS column means these parts are interchangeable.
- The second letter of the shaded ( ) part number is O, not zero.
- The second letter of the shaded ( ) part number is I, not one.
- **部品価格ランクは、変更になることがあります。**
- **QTY欄に記されている数字は、各ユニット当たりの使用個数です。**
- **PART NO.が " -- " の部品は、サービス用部品として準備されておりません。**
- **REMARKS欄の「 } 」マークの部品は、併用部品です。**
- **網掛けの付いたPART NO. の2番目の文字は「ゼロ」ではなく「オー」です。**
- **網掛けの付いたPART NO. の2番目の文字は「イチ」ではなく、「アイ」です。**

# ■ OVERALL ASSEMBLY（総組立）

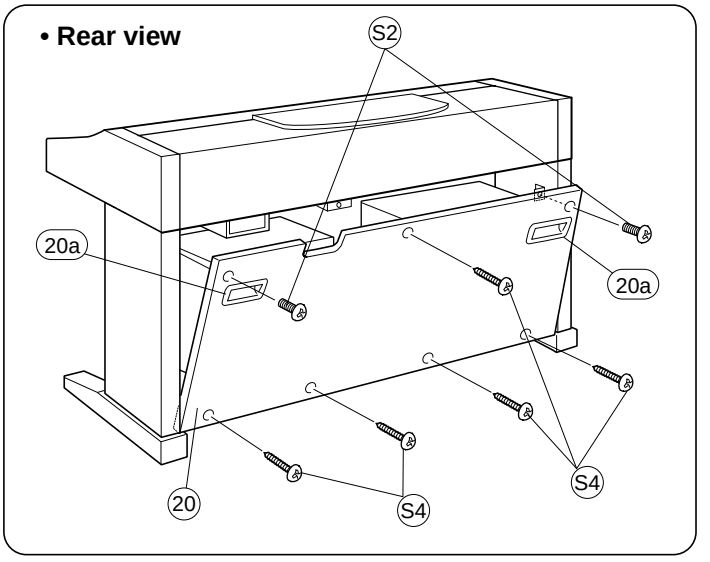


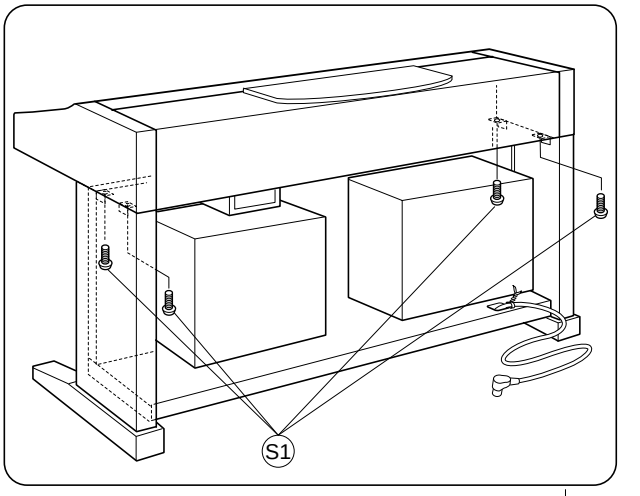


Main unit: See page 5.
（メインユニット）

Headphone hanger set
（ヘッドホンハンガーセット）

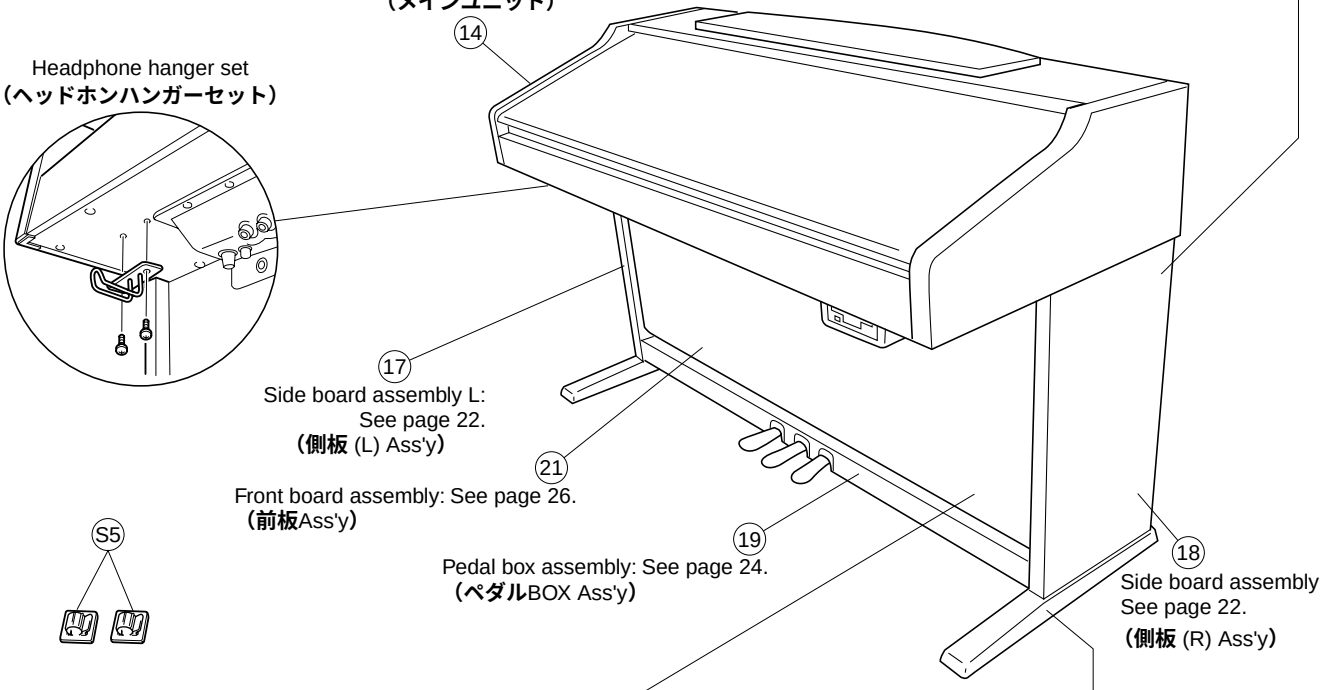


Side board assembly L: See page 22.
（側板 (L) Ass'y）

Front board assembly: See page 26.
（前板Ass'y）

Pedal box assembly: See page 24.
（ペダルBOX Ass'y）

Side board assembly R: See page 22.
（側板 (R) Ass'y）




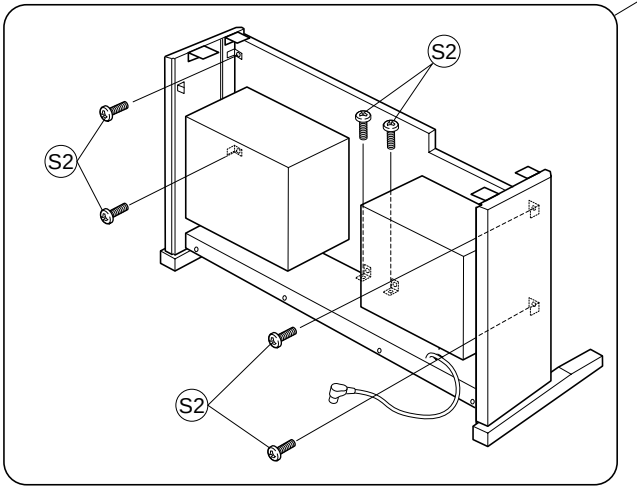


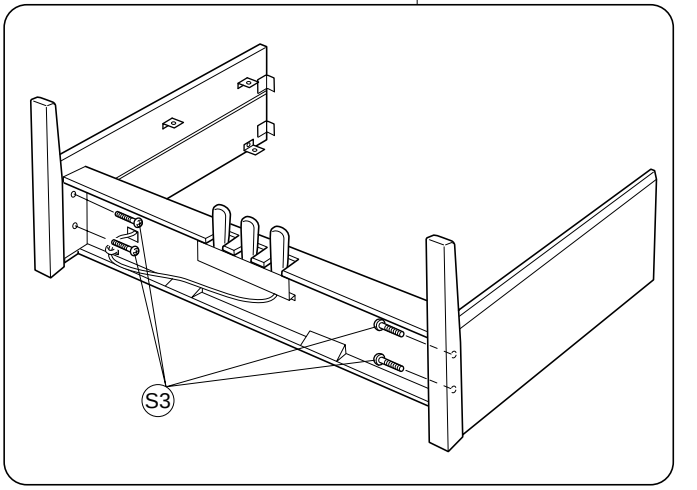

| | REF NO. | PART NO. | DESCRIPTION | | 部品名 | REMARKS | QTY | RANK |
|---|---|---|---|---|---|---|---|---|
| | | | OVERALL ASSEMBLY | | 総組立 | CVP-206CVP-206M/CVP-206C | | |
| | 14 | -- | Main Unit | | メインユニット | CVP-206 J (WA56990) | | |
| | 14 | -- | Main Unit | | メインユニット | CVP-206 U (WA57000) | | |
| | 14 | -- | Main Unit | | メインユニット | CVP-206 B,E (WA57010) | | |
| | 14 | -- | Main Unit | | メインユニット | CVP-206 N (WA57020) | | |
| | 14 | -- | Main Unit | | メインユニット | CVP-206 K (WA57030) | | |
| | 14 | -- | Main Unit | | メインユニット | CVP-206M U (WA57050) | | |
| | 14 | -- | Main Unit | | メインユニット | CVP-206M B,E (WA57060) | | |
| | 14 | -- | Main Unit | | メインユニット | CVP-206M N (WA57070) | | |
| | 14 | -- | Main Unit | | メインユニット | CVP-206M K (WA57080) | | |
| | 14 | -- | Main Unit | | メインユニット | CVP-206C U (WA57100) | | |
| | 14 | -- | Main Unit | | メインユニット | CVP-206C B,E (WA57110) | | |
| | 14 | -- | Main Unit | | メインユニット | CVP-206C N (WA57120) | | |
| | 14 | -- | Main Unit | | メインユニット | CVP-206C K (WA57130) | | |
| | 17 | **V7101200** | Side Board Assembly L | LEFT | 側板Ａｓｓ’ｙ（Ｌ） | CVP-206 | | 16 |
| | 17 | **V7101300** | Side Board Assembly L | LEFT | 側板Ａｓｓ’ｙ（Ｌ） | CVP-206M U,B,E,N,K | | 15 |
| * | 17 | **WA582300** | Side Board Assembly L | LEFT | 側板Ａｓｓ’ｙ（Ｌ） | CVP-206C U,B,E,N,K | | |
| | 18 | **V7101400** | Side Board Assembly R | RIGHT | 側板Ａｓｓ’ｙ（Ｒ） | CVP-206 | | 16 |
| | 18 | **V7101500** | Side Board Assembly R | RIGHT | 側板Ａｓｓ’ｙ（Ｒ） | CVP-206M U,B,E,N,K | | 15 |
| * | 18 | **WA582400** | Side Board Assembly R | RIGHT | 側板Ａｓｓ’ｙ（Ｒ） | CVP-206C U,B,E,N,K | | |
| | 19 | -- | Pedal Box Assembly | | ペダルＢｏｘＡｓｓ’ｙ | CVP-206 (V710160) | | |
| | 19 | -- | Pedal Box Assembly | | ペダルＢｏｘＡｓｓ’ｙ | CVP-206M U,B,E,N,K (V710170) | | |
| | 19 | -- | Pedal Box Assembly | | ペダルＢｏｘＡｓｓ’ｙ | CVP-206C U,B,E,N,K (WA58330) | | |
| * | 20 | **WA616400** | Back Board Assembly | ROSE | 裏板Ａｓｓ’ｙ | CVP-206 | | |
| * | 20 | **WA616500** | Back Board Assembly | MAHOGANY | 裏板Ａｓｓ’ｙ | CVP-206M U,B,E,N,K | | |
| * | 20 | **WA583600** | Back Board Assembly | CHERRY | 裏板Ａｓｓ’ｙ | CVP-206C U,B,E,N,K | | |
| | 20a | **V8901600** | Handle Black | YMMA | 裏蓋把手 | CVP-206/ CVP-206M U,B,E,N,K | 2 | 03 |
| | 20a | **V8901700** | Handle | CHERRY YMMA | 裏蓋把手 | CVP-206C U,B,E,N,K | 2 | 03 |
| | 21 | -- | Front Board Assembly | | 前板Ａｓｓ’ｙ | CVP-206 (V710200) | | |
| | 21 | -- | Front Board Assembly | | 前板Ａｓｓ’ｙ | CVP-206M U,B,E,N,K (V710210) | | |
| | 21 | -- | Front Board Assembly | | 前板Ａｓｓ’ｙ | CVP-206C U,B,E,N,K (WA58390) | | |
| | | | | | | | | |
| | | | ACCESSORIES | | 付属品 | | | |
| ⚠ | | **VT015700** | AC Cord | J 2P 2.5m 7A | 電源コードセット | J | | 05 |
| ⚠ | | **V2916900** | AC Cord | J 2P 7A 2.5m | 電源コードセット | J | | 05 |
| ⚠ | | **VT015800** | AC Cord | U 2P 2.44m 7A | 電源コードセット | U | | 06 |
| ⚠ | | **V2917000** | AC Cord | UC 2P 7A 2.44m | 電源コードセット | U | | 06 |
| ⚠ | | **V3126400** | AC Cord | U 2P 2.5m | 電源コードセット | U | | |
| ⚠ | | **VT016000** | AC Cord | B 2P 2.5m | 電源コードセット | B | | 08 |
| ⚠ | | **V3126500** | AC Cord | B 2P 2.5m | 電源コードセット | B | | |
| ⚠ | | **VT015900** | AC Cord | E 2P 2.5m | 電源コードセット | E,N | | 05 |
| ⚠ | | **V2917100** | AC Cord | E 2P 2.5m 2.5A | 電源コードセット | E,N | | 05 |
| ⚠ | | **V3126300** | AC Cord | E 2P 2.5m | 電源コードセット | E,N | | |
| ⚠ | | **V8911300** | AC Cord | K 2P 2.5A 2.5m | 電源コードセット | K | | 05 |
| * | | **V8029600** | Bench | BC-201DR | 同梱品セット椅子 | CVP-206 J | | |
| * | | **V7563900** | Bench | BC-102DR | 同梱品セット椅子 | CVP-206 U | | |
| * | | **V7564000** | Bench | BC-102MH | 同梱品セット椅子 | CVP-206M U | | |
| * | | **V8878700** | Bench | BC-102CH | 同梱品セット椅子 | CVP-206C U | | |
| * | | **V5531400** | Bench | BC-100DR | 同梱品セット椅子 | CVP-206 N,K | | |
| * | | **V5531500** | Bench | BC-100MH | 同梱品セット椅子 | CVP-206M N,K | | |
| * | | **V5531600** | Bench | BC-100CH | 同梱品セット椅子 | CVP-206C N,K | | |
| * | | **X4087A00** | Floppy Disk | PIANO 50PIECE U/E | 書込済みＦＤ | U,B,E,N,K | | 04 |
| * | | **X4088A00** | Floppy Disk | MUSIC FINDER FD | 書込済みＦＤ | J | | 04 |
| | | **V2384100** | Floppy Disk | 3.50inch 2000K BYT | フロッピーディスク | | | 03 |
| * | | **X3855B00** | CD-ROM | | ＣＤ－ＲＯＭ国内 | J | | |
| * | | **X3856A00** | CD-ROM | | ＣＤ－ＲＯＭ海外 | U,B,E,N,K | | |
| | | **V5771000** | Headphone | 059711 | ヘッドホーン | J | | 07 |
| | | **V7635700** | Screw Set | | ネジセット | CVP-206/ CVP-206M U,B,E,N,K | | 04 |
| * | | **WA569400** | Screw Set | | ネジセット | CVP-206C U,B,E,N,K | | |
| ⚠ | | **VK726100** | AC Adaptor | CCT-5902-0701 | ＡＣアダプタ | N | | 03 |
| | | **V8740600** | Headphone Hanger Set | | ヘッドホンハンガーセット | | | 07 |
| | | | | | | | | |
| | | **V7635700** | Screw Set | | ネジセット | CVP-206/ CVP-206M U,B,E,N,K | | 04 |

*: New Parts

RANK: Japan only

| | REF NO. | PART NO. | DESCRIPTION | | 部品名 | REMARKS | QTY | RANK |
|---|---|---|---|---|---|---|---|---|
| * | | **WA569400** | Screw Set | | ネジセット | CVP-206C U,B,E,N,K | | |
| | S1 | **EG360020** | Bind Head Screw | 6.0X16 MFZN2BL | ＋バインド小ネジ | | 4 | 01 |
| | S2 | **VB931700** | Truss Head Screw | 4.0X14 MFZN2BL | ＋トラス小ネジ | CVP-206/ CVP-206M U,B,E,N,K | 8 | 01 |
| * | S2 | **WA596100** | Truss Head Screw | 4.0X14 MFC2 BR | ＋トラス小ネジ | CVP-206C U,B,E,N,K | 8 | |
| | S3 | **VQ448400** | Truss Head Screw | 6.0X25 MFZN2BL | ＋トラス小ネジ | | 4 | 01 |
| | S4 | **03747290** | Truss Head Tapping Screw-1 | 4.0X20 MFZN2BL | ＋トラスＴＰ　１種 | CVP-206/ CVP-206M U,B,E,N,K | 5 | 01 |
| | S4 | **VB164600** | Truss Head Tapping Screw-1 | 4.0X20 MFC2 BR | ＋トラスＴＰ　１種 | CVP-206C U,B,E,N,K | 5 | 01 |
| | S5 | **VR410300** | Cord Clamp Set | DKN-5B(VHB) | コードクランプセット | | | 03 |
| | | | | | | | | |
| | | | JIGS | | 工具 | | | |
| | | **TX000670** | Rod | | ロッド | | | 99 |

*: New Parts

RANK: Japan only

# ■ MAIN UNIT（メインユニット）

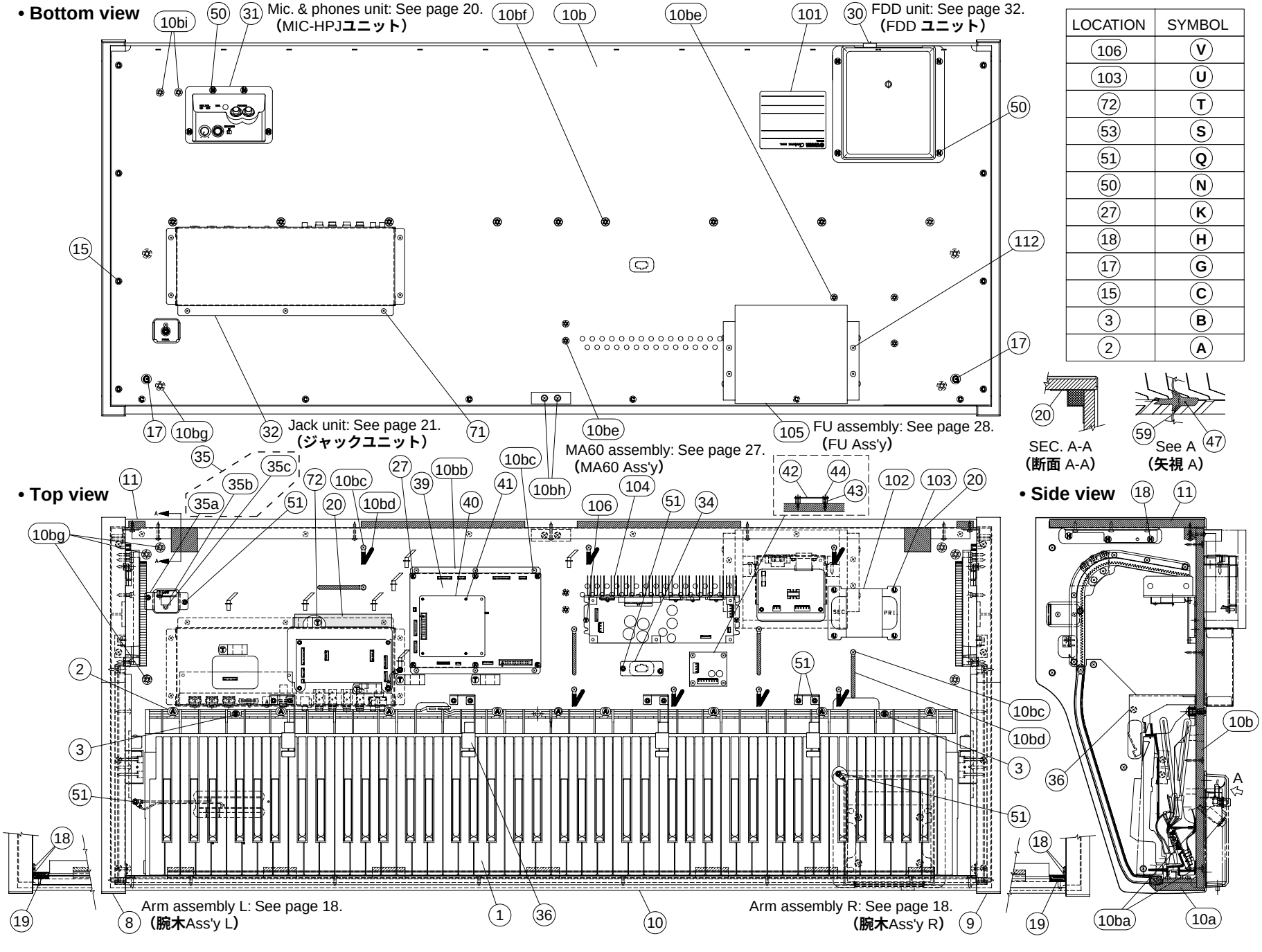


| LOCATION | SYMBOL |
|---|---|
| 106 | V |
| 103 | U |
| 72 | T |
| 53 | S |
| 51 | Q |
| 50 | N |
| 27 | K |
| 18 | H |
| 17 | G |
| 15 | C |
| 3 | B |
| 2 | A |

## • Rear view

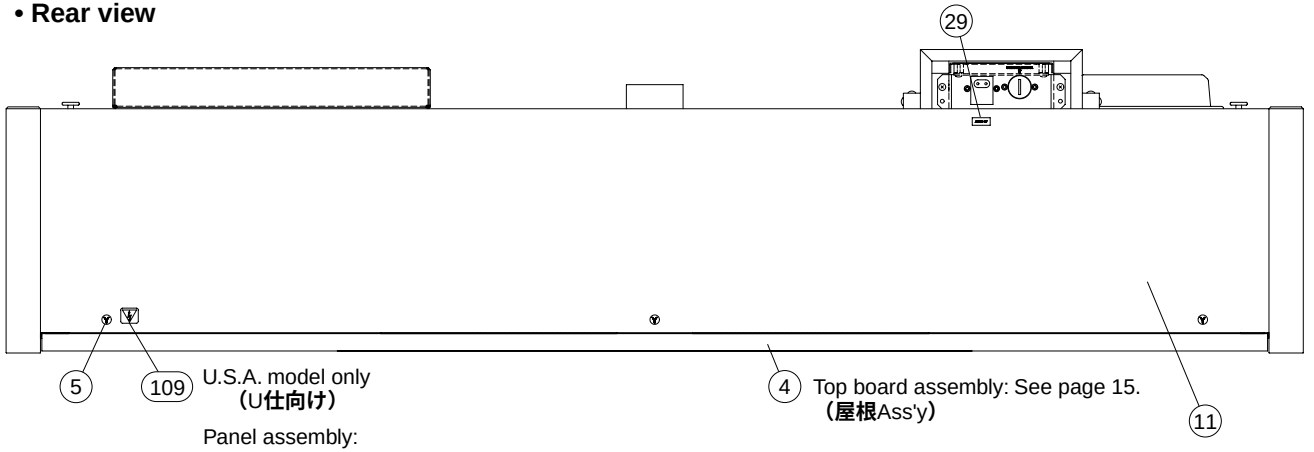


## • Speaker assembly L, R

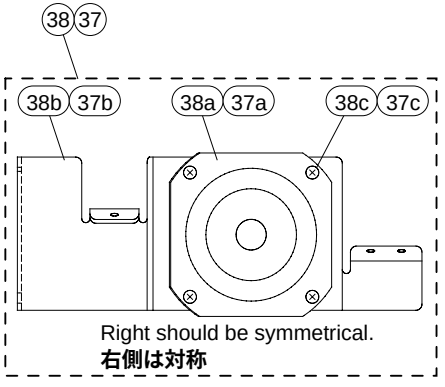


## • Top view

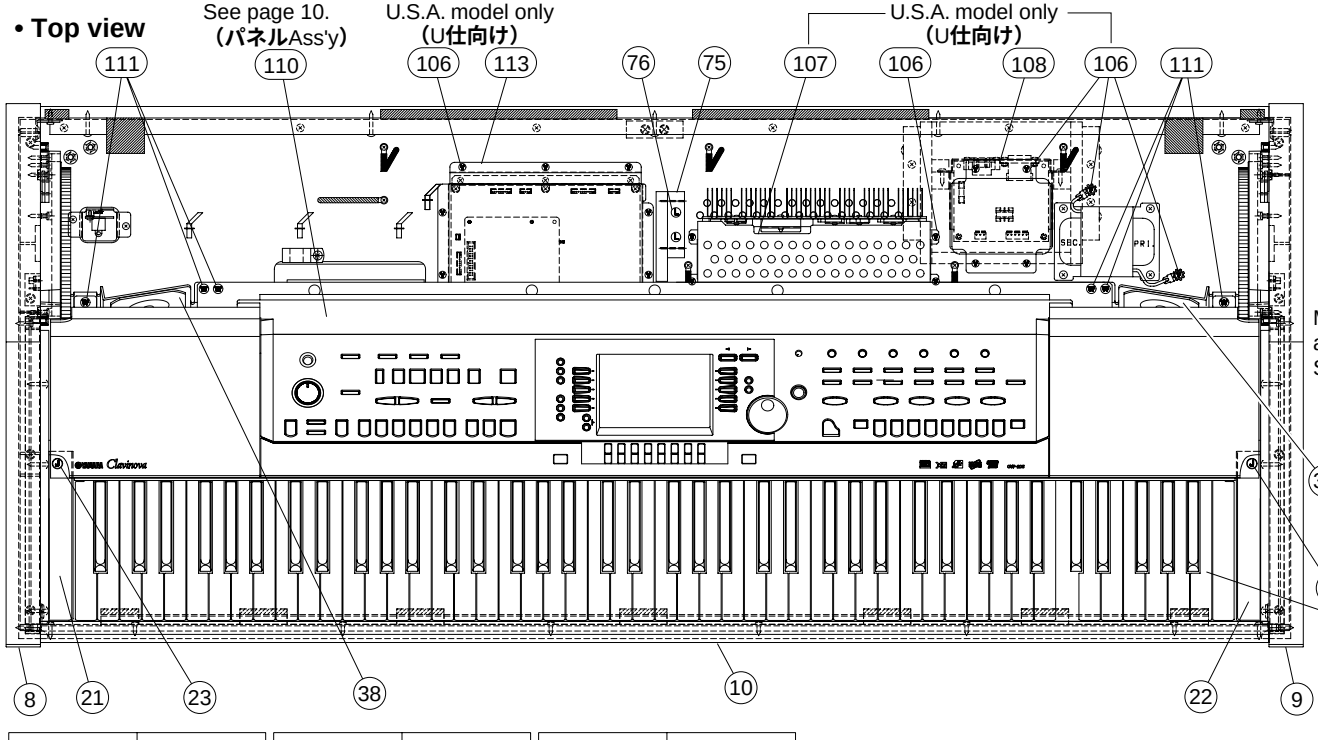


## • Side view

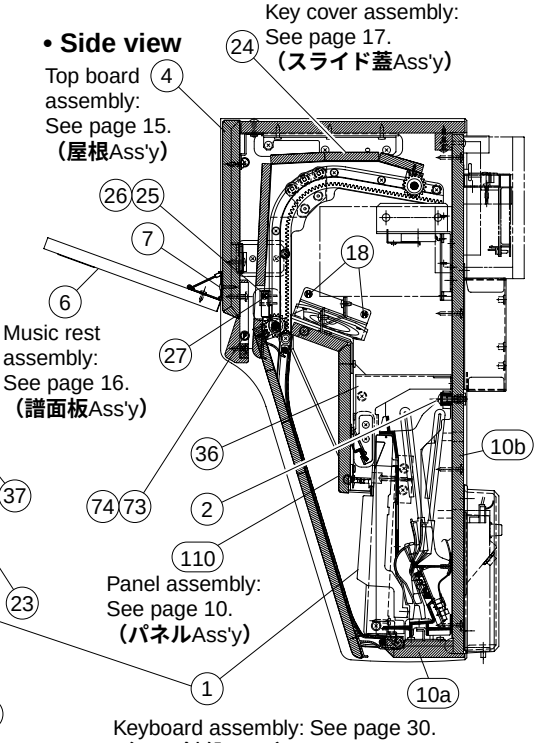


| LOCATION | SYMBOL |
|---|---|
| 111 | W |
| 106 | V |
| 76 | L |

| LOCATION | SYMBOL |
|---|---|
| 74 | F |
| 27 | K |
| 23 | J |

| LOCATION | SYMBOL |
|---|---|
| 18 | H |
| 5 | Y |

| | REF NO. | PART NO. | DESCRIPTION | | 部品名 | REMARKS | | QTY | RANK |
|---|---|---|---|---|---|---|---|---|---|
| | | | MAIN UNIT | | メインユニット | CVP-206/CVP-206M/CVP-206C | | | |
| | | -- | Main Unit | | メインユニット | CVP-206 J | (WA56990) | | |
| | | -- | Main Unit | | メインユニット | CVP-206 U | (WA57000) | | |
| | | -- | Main Unit | | メインユニット | CVP-206 B,E | (WA57010) | | |
| | | -- | Main Unit | | メインユニット | CVP-206 N | (WA57020) | | |
| | | -- | Main Unit | | メインユニット | CVP-206 K | (WA57030) | | |
| | | -- | Main Unit | | メインユニット | CVP-206M U | (WA57050) | | |
| | | -- | Main Unit | | メインユニット | CVP-206M B,E | (WA57060) | | |
| | | -- | Main Unit | | メインユニット | CVP-206M N | (WA57070) | | |
| | | -- | Main Unit | | メインユニット | CVP-206M K | (WA57080) | | |
| | | -- | Main Unit | | メインユニット | CVP-206C U | (WA57100) | | |
| | | -- | Main Unit | | メインユニット | CVP-206C B,E | (WA57110) | | |
| | | -- | Main Unit | | メインユニット | CVP-206C N | (WA57120) | | |
| | | -- | Main Unit | | メインユニット | CVP-206C K | (WA57130) | | |
| | 54 | -- | Connector Assembly | +5-LF KRD 7P-550 | ＋５－ＬＦ束線 | | (V807500) | | |
| | 54a | **VD947800** | Data Line Filter | ESD-R-25D-B | データラインフィルター | | | | 05 |
| | 56 | -- | Connector Assembly | DM-DJACK 10P-600 | ＤＭ－ＤＪＡＣＫ束線 | | (V810190) | | |
| | 56a | **VD947800** | Data Line Filter | ESD-R-25D-B | データラインフィルター | | | | 05 |
| | 58 | -- | Connector Assembly | DM-AJACK 12P-600 | ＤＭ－ＡＪＡＣＫ束線 | | (V810170) | | |
| | 58a | **VD947800** | Data Line Filter | ESD-R-25D-B | データラインフィルター | | | | 05 |
| | 61 | -- | Connector Assembly | HP-AJACK 7P-500 | ＨＰ－ＡＪＡＣＫ束線 | | (V810180) | | |
| | 61a | **VD947800** | Data Line Filter | ESD-R-25D-B | データラインフィルター | | | | 05 |
| | 72 | **EN630230** | Truss Head Tapping Screw-1 | 3.5X14 MFZN2Y | ＋トラスＴＰ　１種 | J | | 5 | 01 |
| | 72 | **EN630230** | Truss Head Tapping Screw-1 | 3.5X14 MFZN2Y | ＋トラスＴＰ　１種 | U | | 6 | 01 |
| | 72 | **EN630230** | Truss Head Tapping Screw-1 | 3.5X14 MFZN2Y | ＋トラスＴＰ　１種 | B,E,N,K | | 5 | 01 |
| | 100 | -- | Composite Common Parts | | 共通部品構成 | CVP-206 | (WA57140) | | |
| | 100 | -- | Composite Common Parts | | 共通部品構成 | CVP-206M U,B,E,N,K | (WA57150) | | |
| | 100 | -- | Composite Common Parts | | 共通部品構成 | CVP-206C U,B,E,N,K | (WA57160) | | |
| | 101 | -- | Name Plate | | 銘板 | CVP-206 J | (WA57170) | | |
| | 101 | -- | Name Plate | | 銘板 | CVP-206 U | (WA57180) | | |
| | 101 | -- | Name Plate | | 銘板 | CVP-206 B,E | (WA57200) | | |
| | 101 | -- | Name Plate | | 銘板 | CVP-206 N | (WA57210) | | |
| | 101 | -- | Name Plate | | 銘板 | CVP-206 K | (WA57220) | | |
| | 101 | -- | Name Plate | | 銘板 | CVP-206M U | (WA57240) | | |
| | 101 | -- | Name Plate | | 銘板 | CVP-206M B,E | (WA57260) | | |
| | 101 | -- | Name Plate | | 銘板 | CVP-206M N | (WA57270) | | |
| | 101 | -- | Name Plate | | 銘板 | CVP-206M K | (WA57280) | | |
| | 101 | -- | Name Plate | | 銘板 | CVP-206C U | (WA57300) | | |
| | 101 | -- | Name Plate | | 銘板 | CVP-206C B,E | (WA57320) | | |
| | 101 | -- | Name Plate | | 銘板 | CVP-206C N | (WA57330) | | |
| | 101 | -- | Name Plate | | 銘板 | CVP-206C K | (WA57340) | | |
| ⚠ | 102 | **XQ429A00** | Power Transformer | GA-60J | 電源トランス | J | | | 12 |
| ⚠ | 102 | **XQ429B00** | Power Transformer | GA-60J | 電源トランス | J | | | 12 |
| | 102 | **VU326500** | Power Transformer Assembly | UL CSA | トランスＡｓｓ’ｙ | U | | | 16 |
| ⚠ | 102a | **XQ430C00** | Power Transformer | 29WP243 UL/CSA | 電源トランス | U | | | 11 |
| | 102b | -- | Earth Wire | | アース束線 | U | (VG29670) | 2 | |
| | 102c | **EP600130** | Bind Head Tapping Screw-B | 3.0X6 MFZN2Y | ＋バインドＢタイト | U | | 2 | 01 |
| | 102d | **VA121600** | Bushing | | ゴムブッシュ | U | | 4 | 01 |
| | 102e | **VK431100** | FDD Spacer | | ＦＤＤスペーサー | U | | 4 | 01 |
| | 102f | **VA121400** | Spacer | | スペーサー | U | | 4 | 02 |
| ⚠ | 102 | **XQ431B00** | Power Transformer | GA-60 E EN60065 | 電源トランス | B,E,K | | | 12 |
| ⚠ | 102 | **XQ432A00** | Power Transformer | GA-60 N | 電源トランス | N | | | 14 |
| ⚠ | 102 | **XQ432B00** | Power Transformer | GA-60 N | 電源トランス | N | | | 14 |
| ⚠ | 102 | **XQ432C00** | Power Transformer | IEC65 GA-60 N | 電源トランス | N | | | |
| | 103 | **EG340210** | Bind Head Screw | 4.0X14 MFZN2Y | ＋バインド小ネジ | J,B,E,N,K | | 4 | 01 |
| | 103 | **VL445800** | Truss Head Screw | 4.0X20 MFZN2Y | ＋トラス小ネジ | U | | 4 | 01 |
| | 104 | **VT144300** | MA60 Assembly | | ＭＡ６０Ａｓｓ’ｙ | J,U | | | |
| | 104 | **VT144400** | MA60 Assembly | | ＭＡ６０Ａｓｓ’ｙ | B,E,N,K | | | |
| | 105 | -- | FU Assembly | | ＦＵ　Ａｓｓ’ｙ | J | (V775230) | | |
| | 105 | -- | FU Assembly | | ＦＵ　Ａｓｓ’ｙ | U | (V775240) | | |
| | 105 | -- | FU Assembly | | ＦＵ　Ａｓｓ’ｙ | B,E,K | (V775250) | | |
| | 105 | -- | FU Assembly | | ＦＵ　Ａｓｓ’ｙ | N | (V775260) | | |
| | 106 | **EP030240** | Bind Head Tapping Screw-1 | 3.5X12 MFZN2Y | ＋バインドＴＰ１種 | J,B,E,N,K | | 2 | 01 |
| | 106 | **EP030240** | Bind Head Tapping Screw-1 | 3.5X12 MFZN2Y | ＋バインドＴＰ１種 | U | | 18 | 01 |
| | 107 | **VT475700** | Cover, MA | SECC-T1 T0.8 | ＭＡカバー | U | | | 07 |
| | 108 | -- | Cover, FU | | ＦＵカバー | U | (V777160) | | |
| | 109 | **VB951400** | Graphic Mark | UL | グラフィックマーク | U | | | 03 |
| | 110 | -- | Panel Assembly | | パネルＡｓｓ’ｙ | CVP-206 J | (WA57550) | | |

∗: New Parts

RANK: Japan only

| | REF NO. | PART NO. | DESCRIPTION | | 部品名 | REMARKS | QTY | RANK |
|---|---|---|---|---|---|---|---|---|
| | 110 | -- | Panel Assembly | | パネルAss'y | CVP-206 U (WA57570) | | |
| | 110 | -- | Panel Assembly | | パネルAss'y | CVP-206 B,E,N,K (WA57560) | | |
| | 110 | -- | Panel Assembly | | パネルAss'y | CVP-206M U (WA83950) | | |
| | 110 | -- | Panel Assembly | | パネルAss'y | CVP-206M B,E,N,K (WA83940) | | |
| | 110 | -- | Panel Assembly | | パネルAss'y | CVP-206C U (WA57600) | | |
| | 110 | -- | Panel Assembly | | パネルAss'y | CVP-206C B,E,N,K (WA57590) | | |
| | 113 | -- | DM Cover Assembly | | DMカバーAss'y | U (V780050) | | |
| | 114 | VD947800 | Data Line Filter | ESD-R-25D-B | データラインフィルター | U | | 05 |
| | 114 | V3122900 | Data Line Filter | NFT-25 | データラインフィルター | U | | 06 |
| | 120 | VP834600 | Adhesive Tape | 12X50 | 粘着テープ | U | | 02 |
| | 121 | VP834600 | Adhesive Tape | 12X50 | 粘着テープ | U | | 02 |
| | 122 | VP834600 | Adhesive Tape | 12X50 | 粘着テープ | U | | 02 |
| | 123 | VP834600 | Adhesive Tape | 12X50 | 粘着テープ | U | | 02 |
| | | | | | | | | |
| | | -- | Composite Common Parts | | 共通部品構成 | CVP-206 (WA57140) | | |
| | | -- | Composite Common Parts | | 共通部品構成 | CVP-206M U,B,E,N,K (WA57150) | | |
| | | -- | Composite Common Parts | | 共通部品構成 | CVP-206C U,B,E,N,K (WA57160) | | |
| | 1 | VZ705400 | Keyboard Assembly | GHD A88 K6 | GHD鍵盤Ass'y | | | 63 |
| | 2 | VV040700 | Pan Head Screw | PW5.0X25 MFZN2Y | +ナベ小ネジ | | 9 | 01 |
| | 3 | EP040230 | Bind Head Tapping Screw-1 | 4.0X14 MFZN2Y | +バインドTP1種 | | 2 | 01 |
| * | 4 | WA857000 | Top Board Assembly | | 屋根Ass'y | CVP-206 | | |
| * | 4 | WA856700 | Top Board Assembly | | 屋根Ass'y | CVP-206M U,B,E,N,K | | |
| * | 4 | WA578400 | Top Board Assembly | | 屋根Ass'y | CVP-206C U,B,E,N,K | | |
| | 5 | V6207400 | Truss Head Screw | 4.0X16 MFZN2BL | +トラス小ネジ | CVP-206/CVP-206M U,B,E,N,K | 3 | 01 |
| | 5 | V9446400 | Truss Head Screw | 4.0X16 MFC2 BR | +トラス小ネジ | CVP-206C U,B,E,N,K | 3 | 01 |
| | 6 | V8388000 | Music Rest Assembly | | 譜面板Ass'y | CVP-206 | | 17 |
| | 6 | V8558200 | Music Rest Assembly | | 譜面板Ass'y | CVP-206M U,B,E,N,K | | 17 |
| | 6 | V8558500 | Music Rest Assembly | | 譜面板Ass'y | CVP-206C U,B,E,N,K | | 17 |
| | 7 | EP030310 | Bind Head Tapping Screw-1 | 3.0X16 MFZN2BL | +バインドTP1種 | | 4 | 01 |
| | 8 | V7115800 | Arm Assembly L | LEFT | 腕木Ass'y(L) | CVP-206 | | 12 |
| | 8 | V7115900 | Arm Assembly L | LEFT | 腕木Ass'y(L) | CVP-206M U,B,E,N,K | | 12 |
| * | 8 | WA579000 | Arm Assembly L | LEFT | 腕木Ass'y(L) | CVP-206C U,B,E,N,K | | |
| | 9 | V7116000 | Arm Assembly R | RIGHT | 腕木Ass'y(R) | CVP-206 | | 12 |
| | 9 | V7116100 | Arm Assembly R | RIGHT | 腕木Ass'y(R) | CVP-206M U,B,E,N,K | | 12 |
| * | 9 | WA579100 | Arm Assembly R | RIGHT | 腕木Ass'y(R) | CVP-206C U,B,E,N,K | | |
| * | 10 | AAX49530 | Keybed & F.Rail Assembly | (WA57510+V711960) | 棚板口棒Ass'y | CVP-206 | | |
| * | 10 | AAX49540 | Keybed & F.Rail Assembly | (WA57510+V711970) | 棚板口棒Ass'y | CVP-206M U,B,E,N,K | | |
| * | 10 | AAX49550 | Keybed & F.Rail Assembly | (WA57520+WA58050) | 棚板口棒Ass'y | CVP-206C U,B,E,N,K | | |
| | 10a | -- | Front Rail Assembly | | 口棒Ass'y | CVP-206 (V711960) | | |
| | 10a | -- | Front Rail Assembly | | 口棒Ass'y | CVP-206M U,B,E,N,K (V711970) | | |
| | 10a | -- | Front Rail Assembly | | 口棒Ass'y | CVP-206C U,B,E,N,K (WA58050) | | |
| | 10b | -- | Keybed Assembly | | 棚板集成 | CVP-206/CVP-206M U,B,E,N,K (WA57510) | | |
| | 10b | -- | Keybed Assembly | | 棚板集成 | CVP-206C U,B,E,N,K (WA57520) | | |
| | 10ba | VZ750500 | Cushion Black | GH | クッションGH | | 2 | 06 |
| | 10bb | -- | Holder, DM P.C.B. | | DMシート固定金具 | (V747700) | 2 | |
| | 10bc | EP030240 | Bind Head Tapping Screw-1 | 3.5X12 MFZN2Y | +バインドTP1種 | | 17 | 01 |
| | 10bd | CB817510 | Cord Binder | S-14B | 束線止め | | 11 | 03 |
| | 10be | VA789400 | Nut | 4X11.5 B MFZN2BL | 鬼目ナット | | 6 | 01 |
| | 10bf | VA127400 | Nut | 5.0X12 B MFZN2BL | 鬼目ナット | | 9 | 01 |
| | 10bg | V6008700 | Nut | 6X12.5 B MFZN2BL | 鬼目ナット | | 6 | 01 |
| | 10bh | VA076400 | Truss Head Tapping Screw-1 | 3.5X30 MFZN2Y | +トラスTP 1種 | | 2 | 01 |
| | 10bi | V9001100 | Nut | 4.0X12.5 I type | 鬼目ナット | | 2 | 01 |
| | 11 | V7121000 | Back Top Board Assembly | | 背面框Ass'y | CVP-206 | | 09 |
| | 11 | V7121100 | Back Top Board Assembly | | 背面框Ass'y | CVP-206M U,B,E,N,K | | 09 |
| * | 11 | WA580800 | Back Top Board Assembly | | 背面框Ass'y | CVP-206C U,B,E,N,K | | |
| | 15 | EN630190 | Truss Head Tapping Screw-1 | 3.5X25 MFZN2BL | +トラスTP 1種 | | 14 | 01 |
| | 17 | VN887900 | Guide Screw | 6.0X14 | ガイドスクリュー | | 2 | 03 |
| | 18 | EP030190 | Bind Head Tapping Screw-1 | 3.5X16 MFZN2Y | +バインドTP1種 | | 14 | 01 |
| | 19 | -- | Electrical Adhesive Tape | AL-40 25X20m | 導電性粘着テープ | (WA58770) | | |
| | 20 | -- | Electrical Adhesive Tape | AL-40 40X20m | 導電性粘着テープ | (WA53090) | | |
| | 21 | V7123200 | End Block Assembly L | LEFT | 拍子木Ass'y(L) | CVP-206 | | 04 |
| | 21 | V7123300 | End Block Assembly L | LEFT | 拍子木Ass'y(L) | CVP-206M U,B,E,N,K | | 04 |
| * | 21 | WA581000 | End Block Assembly L | LEFT | 拍子木Ass'y(L) | CVP-206C U,B,E,N,K | | |

*: New Parts

RANK: Japan only

| | REF NO. | PART NO. | DESCRIPTION | | 部品名 | REMARKS | QTY | RANK |
|---|---|---|---|---|---|---|---|---|
| | 22 | V7123400 | End Block Assembly R | RIGHT | 拍子木Ａｓｓ’ｙ（Ｒ） | CVP-206 | | 04 |
| | 22 | V7123500 | End Block Assembly R | RIGHT | 拍子木Ａｓｓ’ｙ（Ｒ） | CVP-206M U,B,E,N,K | | 04 |
| * | 22 | WA581100 | End Block Assembly R | RIGHT | 拍子木Ａｓｓ’ｙ（Ｒ） | CVP-206C U,B,E,N,K | | |
| | 23 | VA076400 | Truss Head Tapping Screw-1 | 3.5X30 MFZN2Y | ＋トラスＴＰ　１種 | | 2 | 01 |
| | 24 | V7125000 | Key Cover Assembly | | スライド蓋Ａｓｓ’ｙ | CVP-206 | | 21 |
| | 24 | V7125100 | Key Cover Assembly | | スライド蓋Ａｓｓ’ｙ | CVP-206M U,B,E,N,K | | 21 |
| * | 24 | WA581800 | Key Cover Assembly | | スライド蓋Ａｓｓ’ｙ | CVP-206C U,B,E,N,K | | |
| | 25 | V9535800 | Rack Cover L | LFET | ラックカバー（Ｌ） | | | 01 |
| | 26 | V9535900 | Rack Cover R | RIGHT | ラックカバー（Ｒ） | | | 01 |
| | 27 | EP600250 | Bind Head Tapping Screw-B | 3.0X8 MFZN2Y | ＋バインドＢタイト | | 8 | 01 |
| | 29 | VT501000 | Label | | ＡＣ　ＩＮＬＥＴラベル | | | 03 |
| | 30 | -- | FDD Unit | | ＦＤＤ　ＵＮＩＴ | (V706210) | | |
| | 31 | -- | Mic. & Phones Unit | | ＭＩＣ－ＨＰＪユニット | (V767590) | | |
| | 32 | -- | Jack Unit | | ジャックユニット | (WA57470) | | |
| | 34 | VN891200 | Connector Panel | | コネクターパネル | | | 03 |
| | 35 | -- | PK Connector | | ＰＫコネクタ | to Pedal Ass'y (WA52690) | | |
| | 35a | V7585400 | Angle, PK Connector | BEIGE-PRINT | ペダル接続金具塗装印刷品 | | | 05 |
| * | 35b | WA182600 | Circuit Board | PEDAL(DJK) | ＰＥＤＡＬシート | | | |
| | 35c | EP600190 | Bind Head Tapping Screw-B | 3.0X8 MFZN2BL | ＋バインドＢタイト | | 2 | 01 |
| | 36 | -- | Panel Holder | | パネル固定金具Ａ－１ＡＳ | (V717400) | 4 | |
| | 37 | -- | Speaker Assembly R | RIGHT | スピーカＡｓｓ’ｙ　Ｒ | (V773590) | | |
| | 37a | XC292A00 | Speaker | 5.0cm 8 ohm 60W | スピーカ | MONITOR | | 07 |
| | 37b | -- | Speaker Holder R | A-RIGHT | ＳＰ固定金具Ａ－Ｒ | (V715790) | | |
| | 37c | EP600190 | Bind Head Tapping Screw-B | 3.0X8 MFZN2BL | ＋バインドＢタイト | | 4 | 01 |
| | 38 | -- | Speaker Assembly L | LEFT | スピーカＡｓｓ’ｙ　Ｌ | (V773580) | | |
| | 38a | XC292A00 | Speaker | 5.0cm 8 ohm 60W | スピーカ | MONITOR | | 07 |
| | 38b | -- | Speaker Holder L | A-LEFT | ＳＰ固定金具Ａ－Ｌ | (V715780) | | |
| | 38c | EP600190 | Bind Head Tapping Screw-B | 3.0X8 MFZN2BL | ＋バインドＢタイト | | 4 | 01 |
| * | 39 | WA454800 | Circuit Board | DM | ＤＭシート | | | |
| * | 40 | WA455200 | Circuit Board | SWX | ＳＷＸシート | | | |
| | 41 | VU264400 | Board Spacer | | ボードスペーサー | | 4 | 03 |
| | 42 | V7747300 | Circuit Board | NET1 | ＮＥＴ１シート | | | 05 |
| | 43 | CB040950 | Spacer | | スペーサー | | 4 | 03 |
| | 44 | EP030470 | Bind Head Tapping Screw-1 | 3.5X20 MFZN2Y | ＋バインドＴＰ１種 | | 4 | 01 |
| | 47 | VP834600 | Adhesive Tape | 12X50 | 粘着テープ | | 14 | 02 |
| | 48 | -- | Adhesive Tape | 12X100 | 粘着テープ | (V296190) | 2 | |
| | 49 | CB069250 | Cord Holder | BK-1 | インシュロックタイ | | 3 | 01 |
| | 50 | EP030250 | Bind Head Tapping Screw-1 | 3.5X14 MFZN2BL | ＋バインドＴＰ１種 | | 8 | 01 |
| | 51 | EP030240 | Bind Head Tapping Screw-1 | 3.5X12 MFZN2Y | ＋バインドＴＰ１種 | | 15 | 01 |
| | 55 | VK113500 | Connector Assembly | KRD-KRD 5P-550 | ＫＲＤ－ＫＲＤ束線 | | | 03 |
| | 57 | -- | Connector Assembly | KRD-KRD 5P-850 | ＫＲＤ－ＫＲＤ束線 | (VK12250) | | |
| | 59 | V7565100 | Connector Assembly | MK-LF KRD 8P-500 | ＭＫ－ＬＦ束線 | | | |
| | 59a | VD947800 | Data Line Filter | ESD-R-25D-B | データラインフィルター | | | 05 |
| | 60 | VK113900 | Connector Assembly | KRD-KRD 9P-550 | ＫＲＤ－ＫＲＤ束線 | | | 03 |
| | 62 | V7530800 | Connector Assembly | V-OUT 2P | Ｖ－ＯＵＴ束線 | | | |
| | 63 | V7530900 | Connector Assembly | FDD-SIG RA 34P | ＦＤＤ－ＳＩＧ束線 | | | |
| | 64 | V4269800 | Connector Assembly | FDD2 XH 3P-530 | ＦＤＤ電源束線２ | | | |
| | 65 | -- | Connector Assembly | PU-NW VH 4P | ＰＵ－ＮＷ束線 | (V753110) | | |
| | 67 | -- | Connector Assembly | T-SP VH-8P | Ｔ－ＳＰ束線 | (V753140) | | |
| | 68 | -- | Connector Assembly | HP XH 2P | アース線ＨＰ | (VL50740) | | |
| | 69 | -- | Connector Assembly | MIC PH-2P | アース線ＭＩＣ | (V340590) | | |
| | 70 | -- | GND Wire | L=180 | ＧＮＤ線材 | (V756950) | | |
| | 71 | EP030340 | Bind Head Tapping Screw-1 | 3.5X12 MFZN2BL | ＋バインドＴＰ１種 | | 7 | 01 |
| | 73 | CB033070 | Stopper | | 回転止め | | 2 | 03 |
| | 74 | EM040080 | Flat Head Tapping Screw-1 | 4.0X20 MFZN2Y | ＋皿ＴＰ　１種 | | 2 | 01 |
| | 75 | -- | CP Stopper Assembly | | ＣＰストッパーＡｓｓ’ｙ | (V806930) | | |
| | 76 | V5877100 | Truss Head Screw | 4.0X30 MFZN2Y | ＋トラス小ネジ | | 2 | 01 |
| | 77 | -- | Nonwoven Fabric Cloth | 10X10X0.25 | 不織布 | (WB41340) | 4 | |
| | 111 | EP640130 | Bind Head Tapping Screw-B | 4.0X10 MFZN2Y | ＋バインドＢタイト | | 6 | 01 |
| | 112 | VA076400 | Truss Head Tapping Screw-1 | 3.5X30 MFZN2Y | ＋トラスＴＰ　１種 | | 4 | 01 |

*: New Parts

RANK: Japan only

# ■ PANEL ASSEMBLY (パネル Ass'y)

**• Top view**

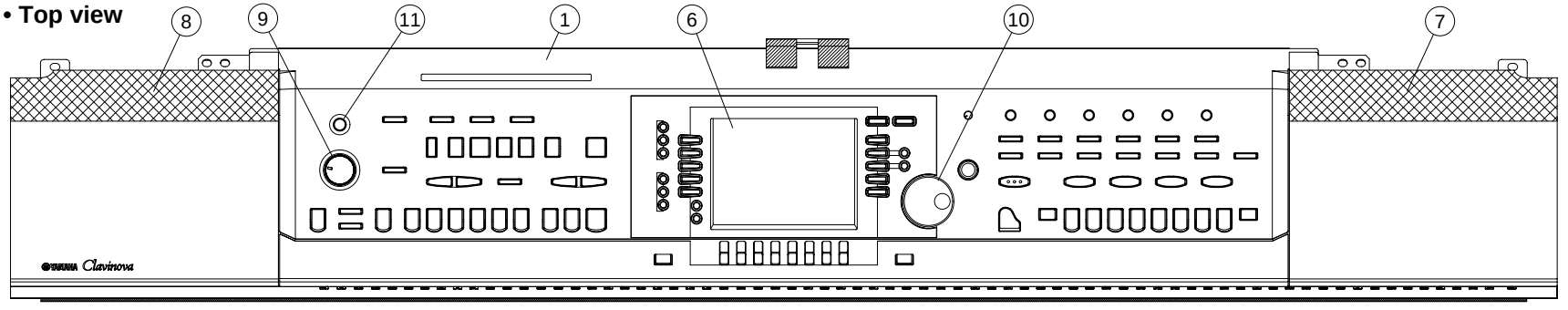


**• Bottom view**

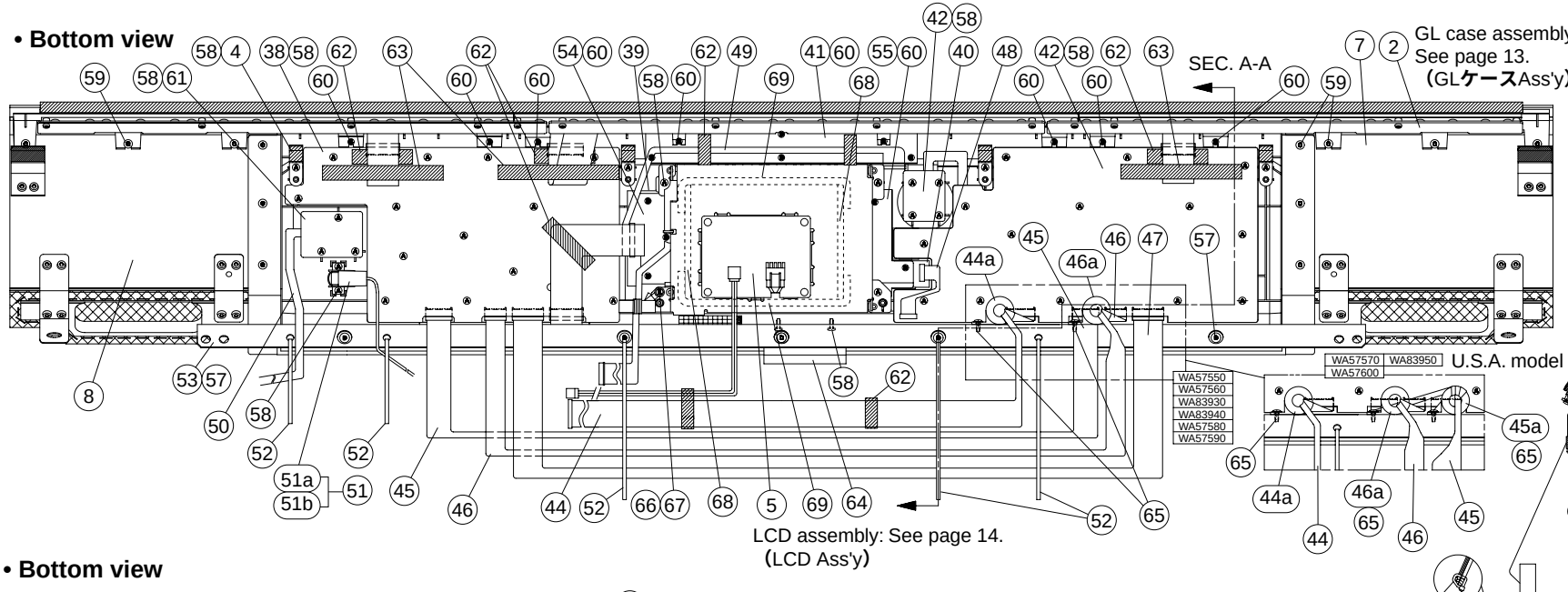


**• Bottom view**

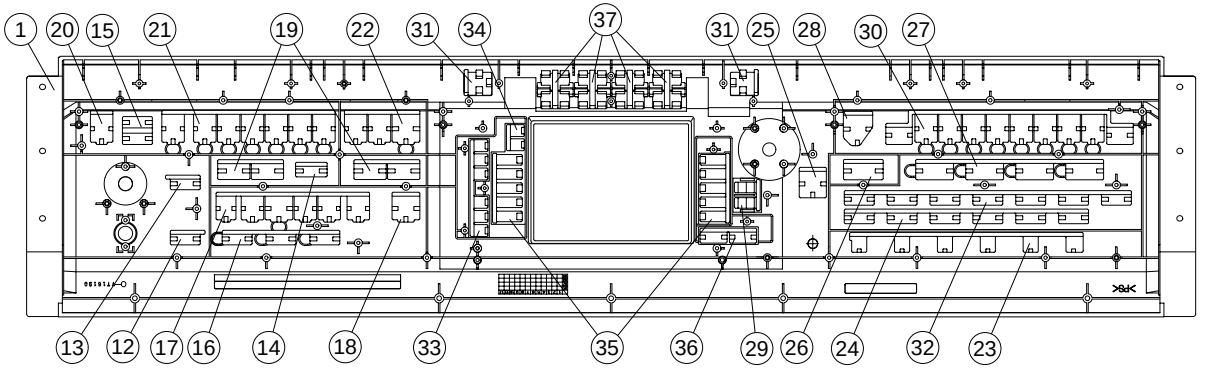

| LOCATION | SYMBOL |
|---|---|
| 66 | E |
| 57 | D |
| 59 | C |
| 60 | B |
| 58 | A |

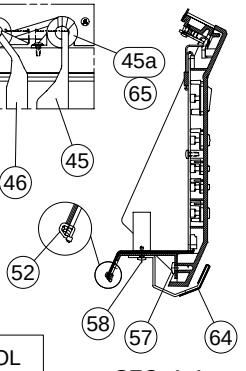

| | REF NO. | PART NO. | DESCRIPTION | | 部品名 | REMARKS | QTY | RANK |
|---|---|---|---|---|---|---|---|---|
| | | | PANEL ASSEMBLY | | パネルAss'y | CVP-206/CVP-206M/CVP-206C | | |
| | | -- | Panel Assembly | | パネルAss'y | CVP-206 J (WA57550) | | |
| | | -- | Panel Assembly | | パネルAss'y | CVP-206 U (WA57570) | | |
| | | -- | Panel Assembly | | パネルAss'y | CVP-206 B,E,N,K (WA57560) | | |
| | | -- | Panel Assembly | | パネルAss'y | CVP-206M U (WA83950) | | |
| | | -- | Panel Assembly | | パネルAss'y | CVP-206M B,E,N,K (WA83940) | | |
| | | -- | Panel Assembly | | パネルAss'y | CVP-206C U (WA57600) | | |
| | | -- | Panel Assembly | | パネルAss'y | CVP-206C B,E,N,K (WA57590) | | |
| * | 1 | WA576100 | Control Panel | | コントロールパネル印刷品 | CVP-206 J | | |
| * | 1 | WA576200 | Control Panel | | コントロールパネル印刷品 | CVP206/CVP206M U,B,E,N,K | | |
| * | 1 | WA576400 | Control Panel | | コントロールパネル印刷品 | CVP-206C U,B,E,N,K | | |
| | 2 | -- | GL Case Assembly | | GLケースAss'y | (V756820) | | |
| | 4 | VV651600 | CP Holder Assembly | | CP固定金具Ass'y | | 4 | 04 |
| | 5 | -- | LCD Assembly | | LCD Ass'y | J,B,E,N,K (WB10660) | | |
| | 5 | -- | LCD Assembly | | LCD Ass'y U | U (WB10710) | | |
| | 6 | V8009200 | LCD Cover | | LCDカバー印刷品 | J | | 10 |
| | 6 | V7162400 | LCD Cover | | LCDカバー印刷品 | U,B,E,N,K | | 10 |
| | 7 | V7160000 | Panel Sub Assembly R | RIGHT | パネルサブAss'y R | CVP-206 | | 09 |
| | 7 | V7171300 | Panel Sub Assembly R | RIGHT | パネルサブAss'y R | CVP-206M U,B,E,N,K | | 09 |
| * | 7 | WA576700 | Panel Sub Assembly R | RIGHT | パネルサブAss'y R | CVP-206C U,B,E,N,K | | |
| | 8 | V7159900 | Panel Sub Assembly L | LEFT | パネルサブAss'y L | CVP-206 | | 09 |
| | 8 | V7171200 | Panel Sub Assembly L | LEFT | パネルサブAss'y L | CVP-206M U,B,E,N,K | | 09 |
| * | 8 | WA577400 | Panel Sub Assembly L | LEFT | パネルサブAss'y L | CVP-206C U,B,E,N,K | | |
| | 9 | VU432400 | Knob Black | | VツマミMASTER VOLUME | MASTER VOLUME | | 01 |
| | 10 | VQ664100 | Encoder Knob Black | | エンコーダツマミ | DATA ENTRY | | 02 |
| | 11 | V7151200 | Push Knob Black | | プッシュツマミクロ | POWER ON/OFF | | 01 |
| | 12 | V7137100 | Push Button Green | 1A | ボタン1A | METRONOME(START/STOP) | | 01 |
| | 13 | V7137300 | Push Button Gray | 1B | ボタン1B | FADE IN/OUT | | 01 |
| | 14 | V7137400 | Push Button Brown | 1C | ボタン1C | TEMPO(TAP TEMPO) | | 01 |
| | 15 | V7137600 | Push Button Dark Gray | 1D x2 | ボタン1D | STYLE(AUTO FIL IN, OTS LINK) | | 01 |
| | 16 | V7137800 | Push Button Gray | 2 x3 | ボタン2 | SONG(EXTRA TRACKS,TRACK2, TARCK1) | | 01 |
| | 17 | V7512100 | Push Button Red/Green/Gray | 3 x6 | ボタン3印刷品 | SONG(REC,TOP,START/STOP, REW,FF,REPEAT) | | 02 |
| | 18 | V7138100 | Push Button Umber | 4 | ボタン4 | SONG(GUIDE) | | 01 |
| | 19 | V7512500 | Push Button Brown | 5 x2 | ボタン5印刷品 | TEMPO(+/-),TRANSPOSE(+/-) | 2 | 01 |
| | 20 | V7138300 | Push Button Dark Gray | 6 | ボタン6 | STYLE(ACMP) | | 01 |
| | 21 | V7512800 | Push Button Brown | 7 x7 | ボタン7印刷品 | STYLE(BREAK,INTRO,MAIN, ENDING/rlt.) | | 03 |
| | 22 | V7512900 | Push Button Brown | 8 x3 | ボタン8印刷品 | STYLE(SYNC.STOP, SYNC.START,START/STOP) | | 01 |
| | 23 | V7138700 | Push Button Gray | 9 x6 | ボタン9 | VOICE EFFECT(REVERB,DSP, VARIATION,HARMONY/ECHO, MONO,LEFT HOLD) | | 02 |
| | 24 | V7138900 | Push Button Gray | 10 x6 | ボタン10 | VOICE(PIANO&HARPSI., E.PIANO,ORGAN&ACCORDION, PERCUSSION,GUITAR,BASS) | | 02 |
| | 25 | V7139000 | Push Button Dark Gray | 11 | ボタン11 | ENTER | | 01 |
| | 26 | V7139300 | Push Button Gray | 12 | ボタン12 | MUSIC FINDER | | 01 |
| | 27 | V7513000 | Push Button Brown | 13 x4 | ボタン13印刷品 | ONE TOUCH SETTING(1-4) | | 02 |
| | 28 | V7139600 | Push Button Brown | 14 | ボタン14 | PIANO | | 01 |
| | 29 | V7139700 | Push Button White | 15 x2 | ボタン15 | LAYER,LEFT | | 01 |
| | 30 | V7140000 | Push Button Dark Gray/Red | 16 x10 | ボタン16 | REGISTRATION MEMORY (FREEZE,1-8,MEMORY) | | 03 |
| | 31 | V7140200 | Push Button Dark Gray | 17 | ボタン17 | DIRECT ACCESS,EXIT | 2 | 01 |
| | 32 | V7140400 | Push Button Gray | 18 x7 | ボタン18 | VOICE(BRASS,WOODWIND, STRINGS,CHOIR&PAD,SYNTH., XG,USER) | | 02 |
| | 33 | V7140500 | Push Button Umber/Beige | 19 x6 | ボタン19 | MENU(DEMO,HELP,FUNCTION), DIGITAL STUDIO(SOUND CREATOR,DIGITAL RECORDING, MIXING CONSOLE) | | 01 |
| | 34 | V7141000 | Push Button Gray | 21 x2 | ボタン21 | BALANCE,CHANNEL ON/OFF | | 01 |
| | 35 | V7141400 | Push Button Gray | 23 x5 | ボタン23 | LCD select(A-J) | 2 | 01 |
| | 36 | V7141600 | Push Button Gray | 25 x2 | ボタン25 | BACK,NEXT | | 01 |
| | 37 | V8012400 | Push Button Gray | 27 x2 | ボタン27印刷品 | LCD select(1-8) | 4 | 01 |
| | 38 | V7134600 | Circuit Board | PNL | PNLシート | | | 11 |
| | 39 | V7134800 | Circuit Board | PNCL | PNCLシート | | | 07 |
| | 40 | V7134900 | Circuit Board | PNCR | PNCRシート | | | 07 |

*: New Parts

RANK: Japan only

| | REF NO. | PART NO. | DESCRIPTION | | 部品名 | REMARKS | | QTY | RANK |
|---|---|---|---|---|---|---|---|---|---|
| | 41 | **V7135100** | Circuit Board | PNCB | ＰＮＣＢシート | | | | 05 |
| | 42 | **V7135200** | Circuit Board | PNR(PNR,ENC) | ＰＮＲシート | | | | 18 |
| | 44 | **--** | Connector Assembly | PND-LF KRD 11P-850 | ＰＮＤ－ＬＦ束線 | | (V801150) | | |
| | 44a | **VD947800** | Data Line Filter | ESD-R-25D-B | データラインフィルター | | | | 05 |
| | 45 | **--** | Connector Assembly | KRD-KRD 10P-650 | ＫＲＤ－ＫＲＤ束線 | J,B,E,N,K | (VK11700) | | |
| | 45 | **--** | Connector Assembly | PNL-LF 12/10P-900P | ＰＮＬ－ＬＦ束線 | U | (V812710) | | |
| | 45a | **VD947800** | Data Line Filter | ESD-R-25D-B | データラインフィルター | U | | | 05 |
| | 46 | **--** | Connector Assembly | PN-LF 8P-750 | ＰＮ－ＬＦ束線 | | (V801160) | | |
| | 46a | **VD947800** | Data Line Filter | ESD-R-25D-B | データラインフィルター | | | | 05 |
| | 47 | **--** | Connector Assembly | KRD-KRD 12P-650 | ＫＲＤ－ＫＲＤ束線 | J,B,E,N,K | (VK11720) | | |
| | 48 | **--** | Connector Assembly | KRD-KRD 6P-100 | ＫＲＤ－ＫＲＤ束線 | | (VK09800) | | |
| | 49 | **--** | Connector Assembly | KRD3 KRD 13P-300 | ＫＲＤ３束線 | | (V753010) | | |
| | 50 | **V2226200** | Connector Assembly | VOL 8P L=400 | ＶＯＬ束線 Ｌ＝４００ | | | | 05 |
| | 51 | **--** | Power Switch Assembly | PSW VH 3P-1400 | ＰＳＷ束線 | | (V753040) | | |
| ⚠ | 51a | **VC843500** | Push Switch | SDDLB1216A J.U.C.S | プッシュＳＷ | POWER ON/OFF | | | 03 |
| | 51b | **V5800800** | Switch Cover | | パワースイッチカバー | | | | 01 |
| | 52 | **CB069250** | Cord Holder | BK-1 | インシュロックタイ | | | 5 | 01 |
| | 53 | **--** | Panel Rail A | | パネル固定レール Ａ | | (V715860) | | |
| | 54 | **--** | Panel Holder L | PNCL A | ＰＮＣＬ金具Ａ | | (V750710) | | |
| | 55 | **--** | Panel Holder R | PNCR A | ＰＮＣＲ金具Ａ | | (V750720) | | |
| | 57 | **EP640130** | Bind Head Tapping Screw-B | 4.0X10 MFZN2Y | ＋バインドＢタイト | | | 5 | 01 |
| | 58 | **EP600250** | Bind Head Tapping Screw-B | 3.0X8 MFZN2Y | ＋バインドＢタイト | | | 49 | 01 |
| | 59 | **EP030230** | Bind Head Tapping Screw-1 | 3.5X10 MFZN2Y | ＋バインドＴＰ１種 | | | 12 | 01 |
| | 60 | **VB096700** | Bind Head Tapping Screw-B | 2.6X8 MFZN2BL | ＋バインドＢタイト | | | 17 | 01 |
| | 61 | **V7134700** | Circuit Board | MV | ＭＶシート | | | | 04 |
| | 62 | **VP834600** | Adhesive Tape | 12X50 | 粘着テープ | | | 8 | 02 |
| | 63 | **--** | Adhesive Tape | 12X100 | 粘着テープ | | (VV62740) | 3 | |
| | 64 | **--** | Holder Assembly, Cover | | 蓋受け金具Ａｓｓ’ｙ | | (V803880) | | |
| | 65 | **V2276900** | PW Head Tapping Screw-B | 3.0X8-8 MFZN2BL | ＋ＰＷＨＢタイト | J,B,E,N,K | | 2 | 01 |
| | 65 | **V2276900** | PW Head Tapping Screw-B | 3.0X8-8 MFZN2BL | ＋ＰＷＨＢタイト | U | | 3 | 01 |
| | 66 | **EP600140** | Bind Head Tapping Screw-B | 3.0X10 MFZN2BL | ＋バインドＢタイト | | | | 01 |
| | 67 | **CB817510** | Cord Binder | S-14B | 束線止め | | | | 03 |
| | 68 | **--** | Cushion | 204_S2 PUR-F2 | クッション（ＰＵＲ） | | (WB05360) | 2 | |
| | 69 | **--** | Cushion | 204_L3 PUR-F2 | クッション（ＰＵＲ） | | (WB36160) | 2 | |
| | 70 | **--** | GND Wire | L=180 | ＧＮＤ線材 | | (V756950) | | |

∗: New Parts

RANK: Japan only

# ■ GL CASE ASSEMBLY（GL ケース Ass'y）

**• Top view**

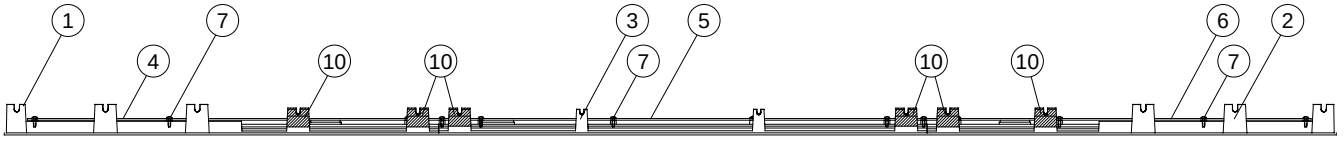


**• Front view**

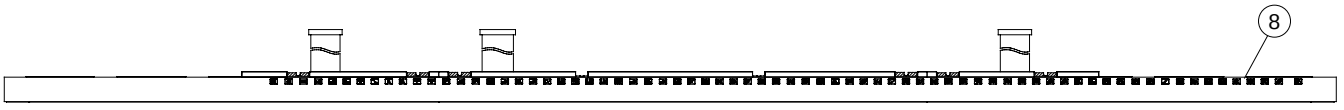


**• Bottom view**

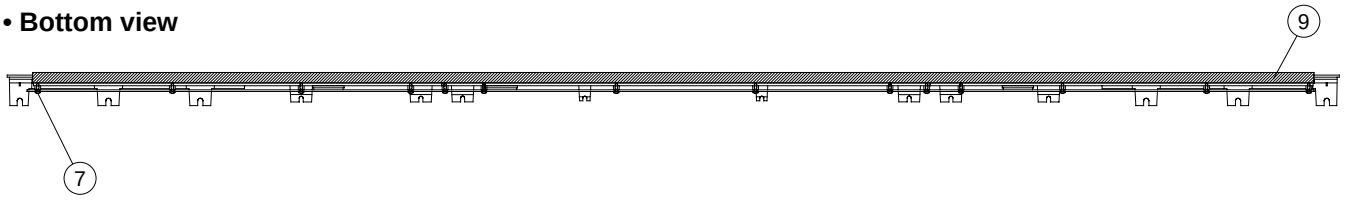


| REF NO. | PART NO. | DESCRIPTION | | 部品名 | REMARKS | QTY | RANK |
|---|---|---|---|---|---|---|---|
| | | GL CASE ASSEMBLY | | ＧＬケースＡｓｓ'ｙ | CVP-206/CVP-206M/CVP-206C | | |
| | -- | GL Case Assembly | | ＧＬケースＡｓｓ'ｙ | (V756820) | | |
| 1 | **V7162200** | GL Case L | LEFT | ＧＬケースＬ成形品 | | | 06 |
| 2 | **V7162300** | GL Case R | RIGHT | ＧＬケースＲ成形品 | | | 06 |
| 3 | **V7511800** | GL Case C | CENTER | ＧＬケースＣ成形品 | | | 07 |
| 4 | **V7135800** | Circuit Board | GLL | ＧＬＬシート | | | 08 |
| 5 | **V7135900** | Circuit Board | GLC | ＧＬＣシート | | | 08 |
| 6 | **V7136100** | Circuit Board | GLR | ＧＬＲシート | | | 08 |
| 7 | **VB096700** | Bind Head Tapping Screw-B | 2.6X8 MFZN2BL | ＋バインドＢタイト | | 14 | 01 |
| 8 | **V7162500** | GL Cover | | ＧＬカバー印刷品 | | | 10 |
| 9 | **V7555700** | Felt | MK | フェルト | | | 03 |
| 10 | -- | Nonwoven Fabric Cloth | 25X20X0.25 | 不織布 | (V810600) | 6 | |

∗: New Parts

RANK: Japan only

# ■ LCD ASSEMBLY（LCD Ass'y）

• **Bottom view**

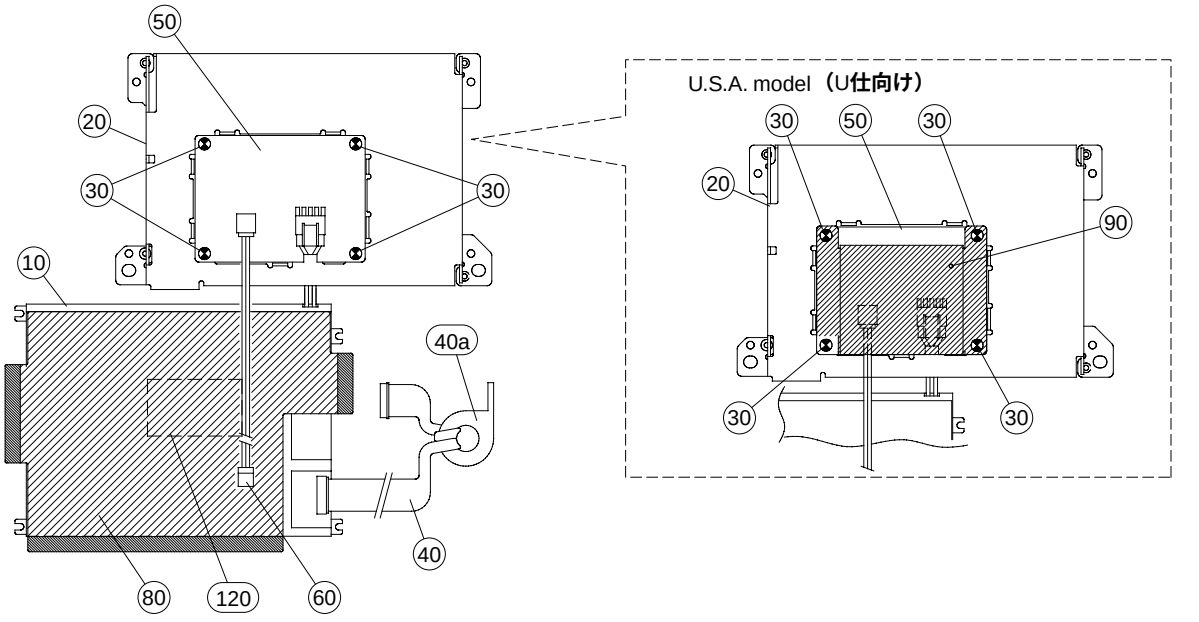


• **Bottom view**

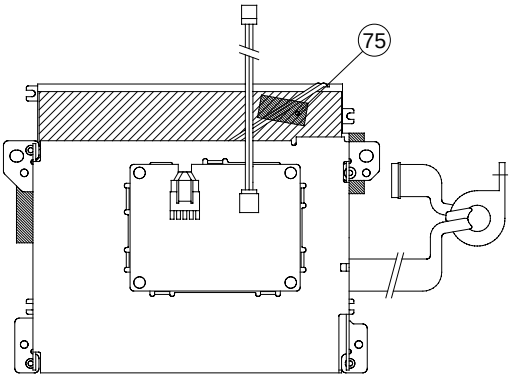


• **Top view**

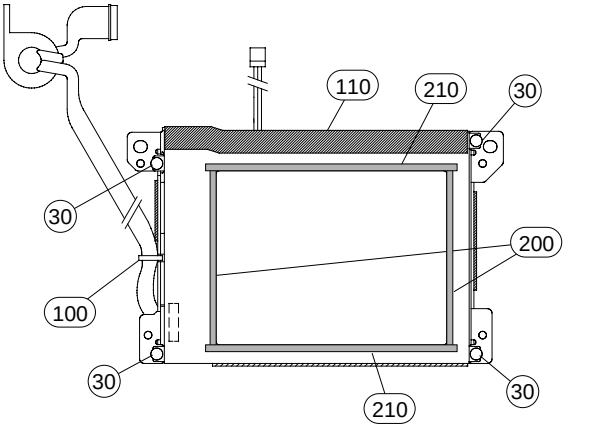


| REF NO. | PART NO. | DESCRIPTION | | 部品名 | REMARKS | QTY | RANK |
|---|---|---|---|---|---|---|---|
| | | LCD ASSEMBLY | | LCD Ass'y | CVP-206/CVP-206M/CVP-206C | | |
| | -- | LCD Assembly | | LCD Ass'y | J,B,E,N,K (WB10660) | | |
| | -- | LCD Assembly | | LCD Ass'y U | U (WB10710) | | |
| 10 | **V3331300** | LCD | EDMMPU3BCF | 液晶ディスプレイ | | | 23 |
| 20 | **VV615000** | Angle Bracket, LCD | | LCD金具 | | | 08 |
| 30 | **EP600250** | Bind Head Tapping Screw-B | 3.0X8 MFZN2Y | +バインドBタイト | | 8 | 01 |
| 40 | **V8011400** | Connector Assembly | LCD-LF DF 14P-450 | LCD－LF束線 | | | |
| 40a | **VB933800** | Ferrite Core | BP53RB310190100A | フェライトコア | | | 04 |
| 50 | **V7170200** | Circuit Board | INV | INVシート | | | 05 |
| 60 | -- | Connector Assembly | B.LIGHT XH 3P-450 | B.LIGHT束線 | (V753050) | | |
| 75 | **VA119300** | Adhesive Tape | 12X25 | 粘着テープ | | | 01 |
| 80 | **VY859400** | Insulation Sheet | | アルミ放熱シート | | | 06 |
| 90 | **VT361300** | Inverter Cover | | インバーターカバー | U | | 06 |
| 100 | **CB069250** | Cord Holder | BK-1 | インシュロックタイ | | | 01 |
| 110 | -- | Aluminum Tape | AT-80 30X50m | アルミテープ | (VY85950) | | |
| 120 | -- | Spacer Cushion | LC3000#2N | スペーサークッション | (VZ01110) | | |
| 200 | -- | Cushion | 204_S2 PUR-F2 | クッション（PUR） | (WB05360) | 2 | |
| 210 | -- | Cushion | 204_L2 PUR-F2 | クッション（PUR） | (WB05370) | 2 | |

∗: New Parts

RANK: Japan only

# ■ TOP BOARD ASSEMBLY（屋根 Ass'y）

• Top view

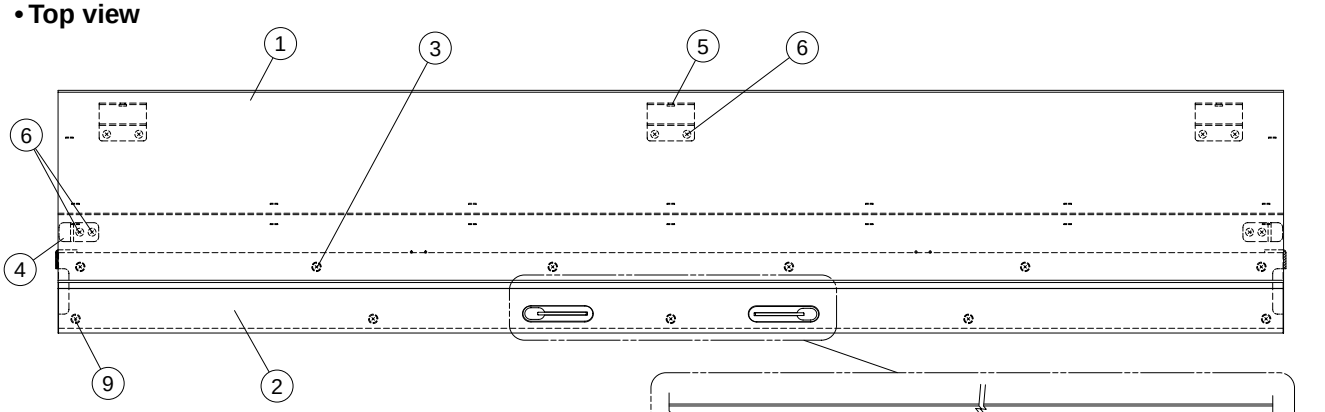


• Side view

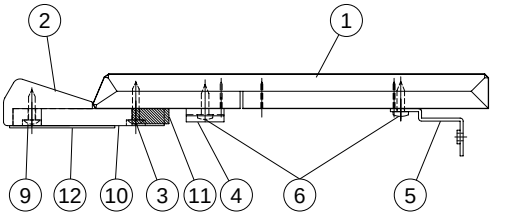


| | REF NO. | PART NO. | DESCRIPTION | | 部品名 | REMARKS | QTY | RANK |
|---|---|---|---|---|---|---|---|---|
| | | | TOP BOARD ASSEMBLY | | 屋根Ass'y | CVP-206/CVP-206M/CVP-206C | | |
| * | | **WA857000** | Top Board Assembly | | 屋根Ass'y | CVP-206 | | |
| * | | **WA856700** | Top Board Assembly | | 屋根Ass'y | CVP-206M U,B,E,N,K | | |
| * | | **WA578400** | Top Board Assembly | | 屋根Ass'y | CVP-206C U,B,E,N,K | | |
| | 1 | -- | Top Board Assembly | | 屋根集成 | CVP-206 (WA85710) | | |
| | 1 | -- | Top Board Assembly | | 屋根集成 | CVP-206M U,B,E,N,K (WA85680) | | |
| | 1 | -- | Top Board Assembly | | 屋根集成 | CVP-206C U,B,E,N,K (WA57850) | | |
| | 2 | -- | Stopper Rail, Music Score | | 屋根面棒 | CVP-206 (V711550) | | |
| | 2 | -- | Stopper Rail, Music Score | | 屋根面棒 | CVP-206M U,B,E,N,K (V711560) | | |
| | 2 | -- | Stopper Rail, Music Score | | 屋根面棒 | CVP-206C U,B,E,N,K (WA85680) | | |
| | 3 | **EN630260** | Truss Head Tapping Screw-1 | 3.5X20 MFZN2Y | ＋トラスＴＰ　１種 | | 6 | 01 |
| | 4 | **VQ485700** | Holder, Top Board F | FRONT | 屋根固定金具　F | | 2 | 03 |
| | 5 | **VQ485800** | Holder, Top Board R | REAR | 屋根固定金具　R | | 3 | 05 |
| | 6 | **EP040170** | Bind Head Tapping Screw-1 | 4.0X16 MFZN2Y | ＋バインドＴＰ１種 | | 10 | 01 |
| | 7 | **V7114400** | Music Stopper Assembly | | 譜面押えAss'y | CVP-206 | 2 | |
| | 7 | **V7567500** | Music Stopper Assembly | | 譜面押えAss'y | CVP-206M U,B,E,N,K | 2 | |
| | 7 | **V8902200** | Music Stopper Assembly | | 譜面押えAss'y | CVP-206C U,B,E,N,K | 2 | 07 |
| | 8 | **EP030320** | Bind Head Tapping Screw-1 | 3.5X10 MFZN2BL | ＋バインドＴＰ１種 | | 4 | 01 |
| | 9 | **03747330** | Truss Head Tapping Screw-1 | 4.0X16 MFZN2BL | ＋トラスＴＰ　１種 | | 5 | 01 |
| | 10 | -- | Support Cleat | | 補強桟（屋根） | (V718520) | | |
| | 11 | **VS349600** | Felt | 40X8X3 | フェルト | | 2 | 03 |
| | 12 | **V9568700** | Felt | 1270X50X1 | フェルト | | | 06 |

*: New Parts　　RANK: Japan only

# ■ MUSIC REST ASSEMBLY（譜面板 Ass'y）

• **Rear view**

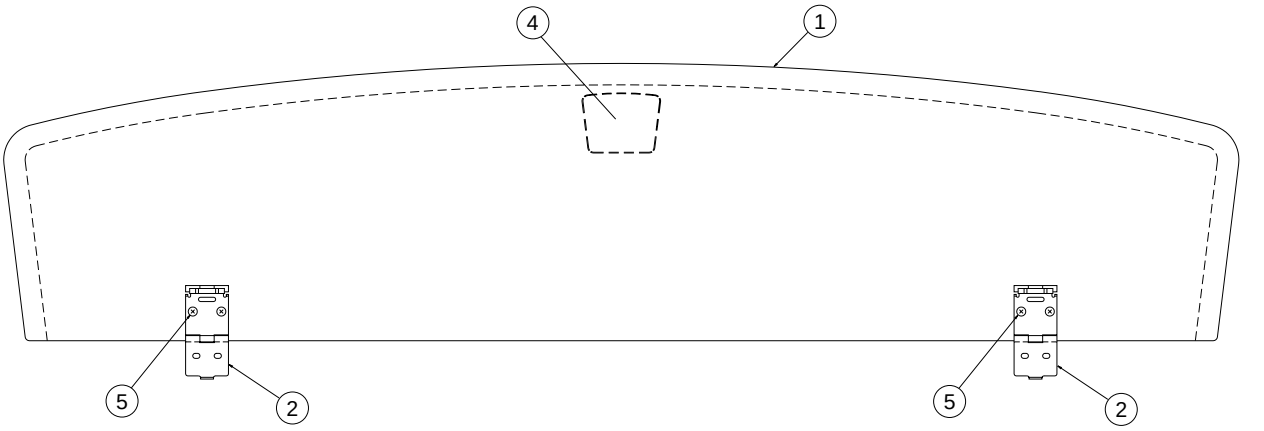


• **Side view**

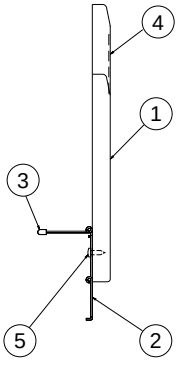


| REF NO. | PART NO. | DESCRIPTION | | 部品名 | REMARKS | QTY | RANK |
|---|---|---|---|---|---|---|---|
| | | MUSIC REST ASSEMBLY | | 譜面板Ass'y | CVP-206/CVP-206M/CVP-206C | | |
| | **V8388000** | Music Rest Assembly | | 譜面板Ass'y | CVP-206 | | 17 |
| | **V8558200** | Music Rest Assembly | | 譜面板Ass'y | CVP-206M U,B,E,N,K | | 17 |
| | **V8558500** | Music Rest Assembly | | 譜面板Ass'y | CVP-206C U,B,E,N,K | | 17 |
| 1 | **--** | Music Rest | | 譜面板塗装品 | CVP-206 (V842650) | | |
| 1 | **--** | Music Rest | | 譜面板塗装品 | CVP-206M U,B,E,N,K (V855680) | | |
| 1 | **--** | Music Rest | | 譜面板塗装品 | CVP-206C U,B,E,N,K (V855720) | | |
| 2 | **V8437600** | Hinge | 1.6mm YMMA | 譜面蝶番 | | 2 | 05 |
| 3 | **VV965900** | Cap | t=1.6mm | 蝶番キャップ | | 2 | 03 |
| 4 | **V5782300** | Badge | BRASS | バッジ（クラビノーバ） | | | 05 |
| 5 | **20404200** | Bind Head Tapping Screw-1 | 3.0X10 MFZN2BL | ＋バインドＴＰ１種 | | 4 | |

∗: New Parts

RANK: Japan only

# ■ KEY COVER ASSEMBLY（スライド蓋 Ass'y）

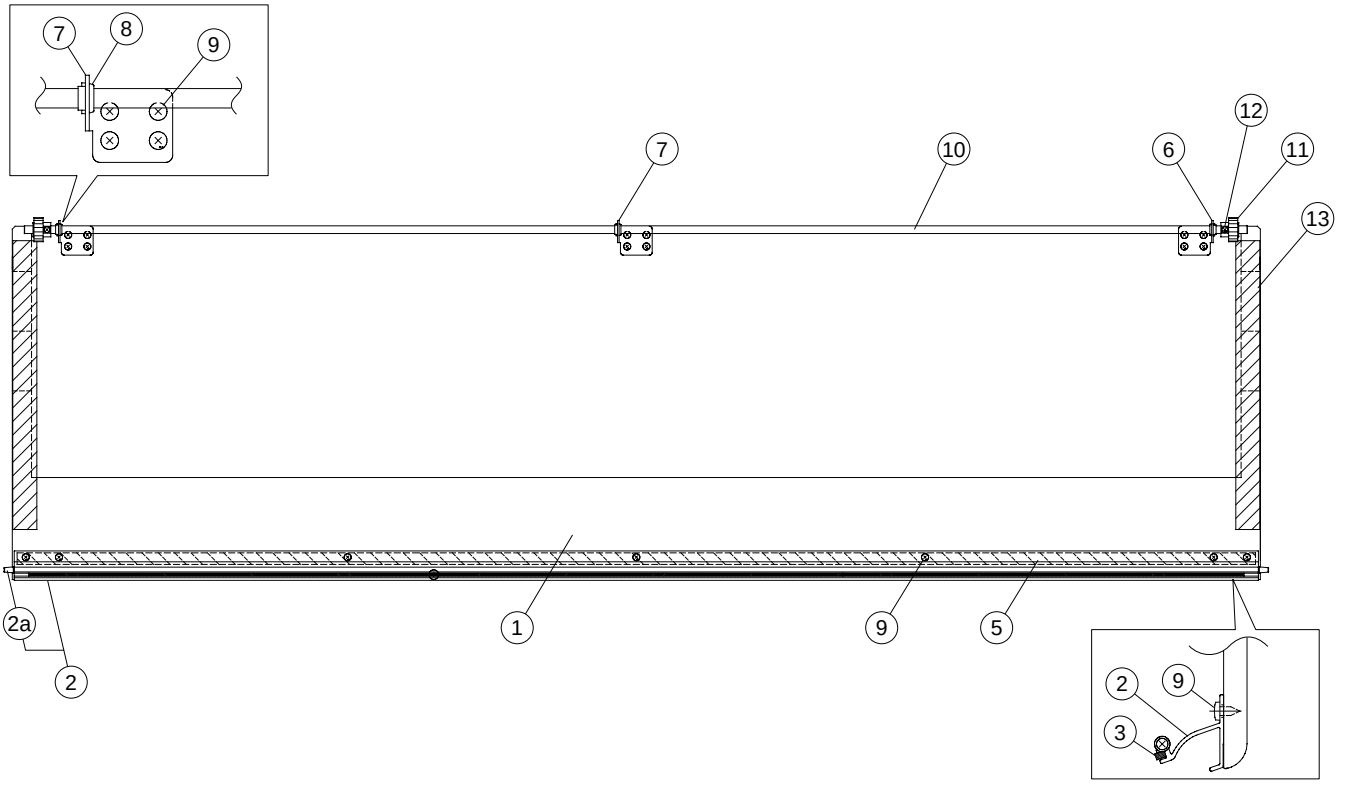


| | REF NO. | PART NO. | DESCRIPTION | | 部品名 | REMARKS | QTY | RANK |
|---|---|---|---|---|---|---|---|---|
| | | | KEY COVER ASSEMBLY | | スライド蓋Ａｓｓ’ｙ | CVP-206/CVP-206M/CVP-206C | | |
| | | **V7125000** | Key Cover Assembly | | スライド蓋Ａｓｓ’ｙ | CVP-206 | | 21 |
| | | **V7125100** | Key Cover Assembly | | スライド蓋Ａｓｓ’ｙ | CVP-206M U,B,E,N,K | | 21 |
| * | | **WA581800** | Key Cover Assembly | | スライド蓋Ａｓｓ’ｙ | CVP-206C U,B,E,N,K | | |
| | 1 | **--** | Key Cover | | スライド蓋集成 | CVP-206 (V712560) | | |
| | 1 | **--** | Key Cover | | スライド蓋集成 | CVP-206M U,B,E,N,K (V712570) | | |
| | 1 | **--** | Key Cover | | スライド蓋集成 | CVP-206C U,B,E,N,K (WA58190) | | |
| | 2 | **V7125200** | Sash-F Assembly | | サッシF Ａｓｓ’ｙ | | | |
| | 2a | **V4964400** | Guide Pin | | ガイドピン | | 2 | |
| | 3 | **VU457600** | Cushion | 421X2.5XT4 | クッション | | 3 | 03 |
| | 5 | **--** | Adhesive Tape | #500 W=12 | 粘着テープ | (VE36310) | | |
| | 6 | **--** | Holder, Rod L | LEFT | 連動棒支持金具Ｌ | (V750840) | | |
| | 7 | **--** | Holder, Rod R | RIGHT | 連動棒支持金具Ｒ | (V750850) | 2 | |
| | 8 | **VS368500** | Bushing | | ブッシュ | | 3 | 03 |
| | 9 | **VN920900** | Bind Head Tapping Screw-1 | 3.5X8 MFZN2BL | ＋バインドＴＰ１種 | | 19 | 01 |
| | 10 | **V7125500** | Rod | | 連動棒 | | | 08 |
| | 11 | **V9857900** | Gear | | ピニオンギヤ | | 2 | |
| | 12 | **EG330060** | Bind Head Screw | 3.0X10 MFZN2Y | ＋バインド小ネジ | | 2 | 01 |
| | 13 | **V7493200** | Tape | #4430 300X25 | 摺動テープ | | 2 | 03 |

*: New Parts

RANK: Japan only

# ■ ARM ASSEMBLY（腕木 Ass'y）

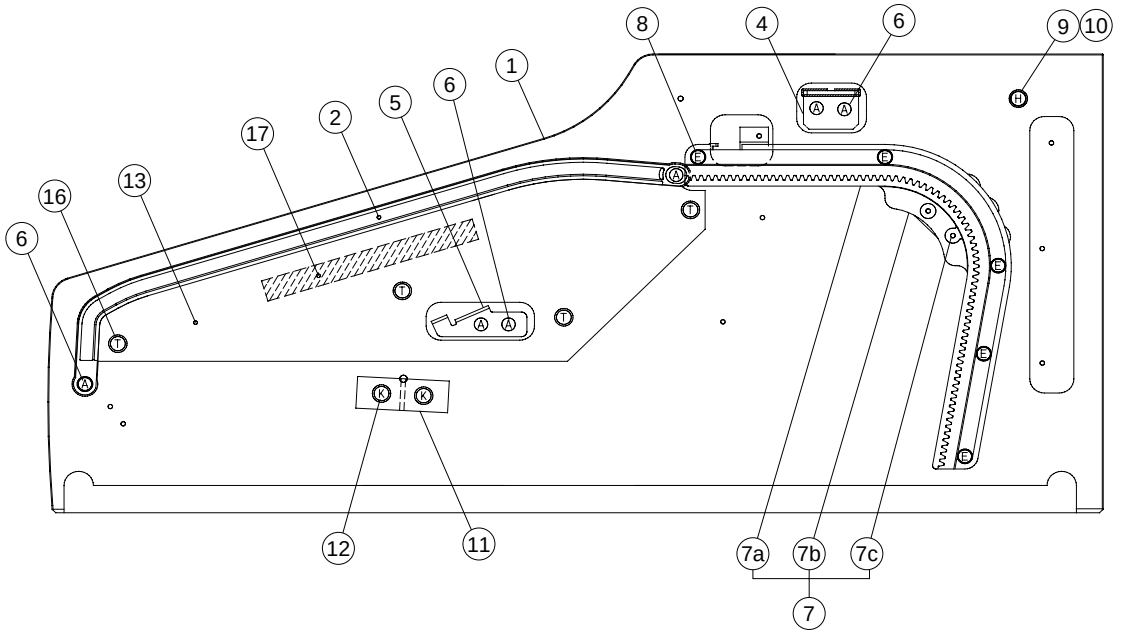


| LOCATION | SYMBOL |
|---|---|
| 16 | T |
| 12 | K |
| 10 | H |
| 8 | E |
| 6 | A |

## ● ARM ASSEMBLY L（腕木 Ass'y (L)）

| | REF NO. | PART NO. | DESCRIPTION | | 部品名 | REMARKS | QTY | RANK |
|---|---|---|---|---|---|---|---|---|
| | | | ARM ASSEMBLY L | LEFT | 腕木Ａｓｓ’ｙ（Ｌ） | CVP-206/CVP-206M/CVP-206C | | |
| | | **V7115800** | Arm Assembly L | LEFT | 腕木Ａｓｓ’ｙ（Ｌ） | CVP-206 | 12 | |
| | | **V7115900** | Arm Assembly L | LEFT | 腕木Ａｓｓ’ｙ（Ｌ） | CVP-206M U,B,E,N,K | 12 | |
| * | | **WA579000** | Arm Assembly L | LEFT | 腕木Ａｓｓ’ｙ（Ｌ） | CVP-206C U,B,E,N,K | | |
| | 1 | **--** | Side Cover L | LEFT | 腕木（Ｌ） | CVP-206 (V711620) | | |
| | 1 | **--** | Side Cover L | LEFT | 腕木（Ｌ） | CVP-206M U,B,E,N,K (V711630) | | |
| | 1 | **--** | Side Cover L | LEFT | 腕木（Ｌ） | CVP-206C U,B,E,N,K (WA57920) | | |
| | 2 | **V7493800** | Guide Rail Assembly L | LEFT | ガイドレール（Ｌ）Ａｓｓ | CVP-206/ CVP-206M U,B,E,N,K | | |
| * | 2 | **WA579700** | Guide Rail Assembly L | LEFT | ガイドレール（Ｌ）Ａｓｓ | CVP-206C U,B,E,N,K | | |
| | 4 | **V7534400** | Holder Assembly, Top Board | | 屋根受け金具Ａｓｓ’ｙ | | | 03 |
| | 5 | **V7506400** | Panel Holder | A-3 LEFT | パネル固定金具Ａ－３Ｌ | | | |
| | 6 | **EP030260** | Bind Head Tapping Screw-1 | 3.5X16 MFZN2BL | ＋バインドＴＰ１種 | | 6 | 01 |
| * | 7 | **V7117500** | Rack Assembly L | LEFT | ラックＡｓｓ’ｙ（Ｌ） | | | |
| | 7a | **V7117800** | Rack L | LEFT | ラック成形品（Ｌ） | | | 03 |
| | 7b | **V7507900** | Bearing Assembly L | LEFT | ベアリングＡｓｓ’ｙＬ | | | 04 |
| | 7c | **EP600220** | Bind Head Tapping Screw-B | 3.0X10 MFZN2Y | ＋バインドＢタイト | | 2 | 01 |
| | 8 | **EP030470** | Bind Head Tapping Screw-1 | 3.5X20 MFZN2Y | ＋バインドＴＰ１種 | | 5 | 01 |
| | 9 | **CB033070** | Stopper | | 回転止め | | | 03 |
| | 10 | **EM040080** | Flat Head Tapping Screw-1 | 4.0X20 MFZN2Y | ＋皿ＴＰ　１種 | | | 01 |
| | 11 | **--** | Crosspiece | 50X27X18T | 桟 | (V711910) | | |
| | 12 | **VA076400** | Truss Head Tapping Screw-1 | 3.5X30 MFZN2Y | ＋トラスＴＰ　１種 | | 2 | 01 |
| | 13 | **--** | Cover Support L | LEFT | 山板（Ｌ） | CVP-206 (V711810) | | |
| | 13 | **--** | Cover Support L | LEFT | 山板（Ｌ） | CVP-206M U,B,E,N,K (V711820) | | |
| | 13 | **--** | Cover Support L | LEFT | 山板（Ｌ） | CVP-206C U,B,E,N,K (WA58020) | | |
| | 16 | **EN630260** | Truss Head Tapping Screw-1 | 3.5X20 MFZN2Y | ＋トラスＴＰ　１種 | | 4 | 01 |
| | 17 | **--** | Adhesive Tape | #500 W=12 | 粘着テープ | (VE36310) | | |
| | 18 | **--** | Masking Tape | #726 | マスキングテープ | (WA78190) | | |

*: New Parts　　RANK: Japan only

## ● ARM ASSEMBLY R（腕木 Ass'y (R)）

| | REF NO. | PART NO. | DESCRIPTION | | 部品名 | REMARKS | QTY | RANK |
|---|---|---|---|---|---|---|---|---|
| | | | ARM ASSEMBLY R | RIGHT | 腕木Ａｓｓ’ｙ（Ｒ） | CVP-206/CVP-206M/CVP-206C | | |
| | | **V7116000** | Arm Assembly R | RIGHT | 腕木Ａｓｓ’ｙ（Ｒ） | CVP-206 | | 12 |
| | | **V7116100** | Arm Assembly R | RIGHT | 腕木Ａｓｓ’ｙ（Ｒ） | CVP-206M U,B,E,N,K | | 12 |
| * | | **WA579100** | Arm Assembly R | RIGHT | 腕木Ａｓｓ’ｙ（Ｒ） | CVP-206C U,B,E,N,K | | |
| | 1 | **--** | Side Cover R | RIGHT | 腕木（Ｒ） | CVP-206 (V711640) | | |
| | 1 | **--** | Side Cover R | RIGHT | 腕木（Ｒ） | CVP-206M U,B,E,N,K (V711650) | | |
| | 1 | **--** | Side Cover R | RIGHT | 腕木（Ｒ） | CVP-206C U,B,E,N,K (WA57930) | | |
| | 2 | **V7493900** | Guide Rail Assembly R | RIGHT | ガイドレール（Ｒ）Ａｓｓ | CVP-206/ CVP-206M U,B,E,N,K | | |
| * | 2 | **WA579800** | Guide Rail Assembly R | RIGHT | ガイドレール（Ｒ）Ａｓｓ | CVP-206C U,B,E,N,K | | |
| | 4 | **V7534400** | Holder Assembly, Top Board | | 屋根受け金具Ａｓｓ’ｙ | | | 03 |
| | 5 | **V7507400** | Panel Holder | A-3 RIGHT | パネル固定金具Ａ－３Ｒ | | | |
| | 6 | **EP030260** | Bind Head Tapping Screw-1 | 3.5X16 MFZN2BL | ＋バインドＴＰ１種 | | 6 | 01 |
| * | 7 | **V7117600** | Rack Assembly R | RIGHT | ラックＡｓｓ’ｙ（Ｒ） | | | |
| | 7a | **V7117900** | Rack R | RIGHT | ラック成形品（Ｒ） | | | 03 |
| | 7b | **V7508000** | Bearing Assembly R | RIGHT | ベアリングＡｓｓ’ｙＲ | | | |
| | 7c | **EP600220** | Bind Head Tapping Screw-B | 3.0X10 MFZN2Y | ＋バインドＢタイト | | 2 | 01 |
| | 8 | **EP030470** | Bind Head Tapping Screw-1 | 3.5X20 MFZN2Y | ＋バインドＴＰ１種 | | 5 | 01 |
| | 9 | **CB033070** | Stopper | | 回転止め | | | 03 |
| | 10 | **EM040080** | Flat Head Tapping Screw-1 | 4.0X20 MFZN2Y | ＋皿ＴＰ　１種 | | | 01 |
| | 11 | **--** | Crosspiece | 50X27X18T | 桟 | (V711910) | | |
| | 12 | **VA076400** | Truss Head Tapping Screw-1 | 3.5X30 MFZN2Y | ＋トラスＴＰ　１種 | | 2 | 01 |
| | 13 | **--** | Cover Support R | RIGHT | 山板（Ｒ） | CVP-206 (V711830) | | |
| | 13 | **--** | Cover Support R | RIGHT | 山板（Ｒ） | CVP-206M U,B,E,N,K (V711840) | | |
| | 13 | **--** | Cover Support R | RIGHT | 山板（Ｒ） | CVP-206C U,B,E,N,K (WA58030) | | |
| | 16 | **EN630260** | Truss Head Tapping Screw-1 | 3.5X20 MFZN2Y | ＋トラスＴＰ　１種 | | 4 | 01 |
| | 17 | **--** | Adhesive Tape | #500 W=12 | 粘着テープ | (VE36310) | | |
| | 18 | **--** | Masking Tape | #726 | マスキングテープ | (WA78190) | | |

*: New Parts　　RANK: Japan only

# ■ MIC. & PHONES UNIT（MIC-HPJ ユニット）

• Bottom view

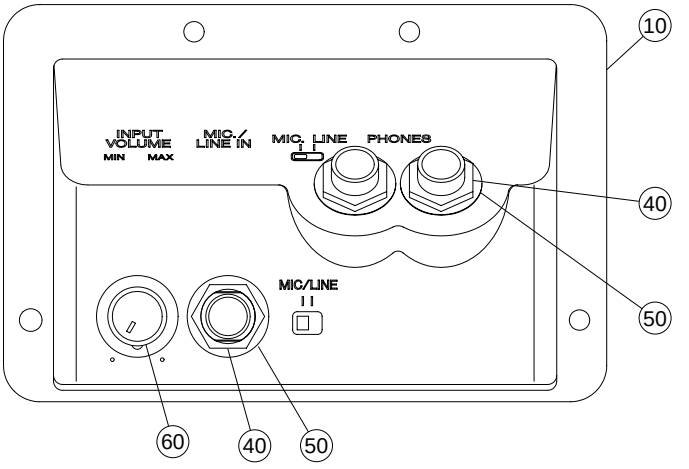


• Side view

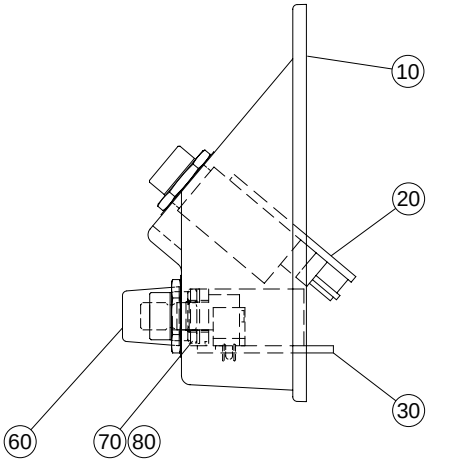


| REF NO. | PART NO. | DESCRIPTION | | 部品名 | REMARKS | QTY | RANK |
|---|---|---|---|---|---|---|---|
| | | MIC. & PHONES UNIT | | ＭＩＣ－ＨＰＪユニット | CVP-206/CVP-206/CVP-206C | | |
| | -- | Mic. & Phones Unit | | ＭＩＣ－ＨＰＪユニット | (V767590) | | |
| 10 | **V8036100** | Cover, Mic. & Phones | | ＭＩＣ－ＨＰカバー印刷品 | | | 05 |
| 20 | **V8115900** | Circuit Board | HP | ＨＰシート | | | 07 |
| 30 | **V7596600** | Circuit Board | MIC | ＭＩＣシート | | | 08 |
| 40 | **VB508600** | Hexagonal Nut | 12.0X14X2 MFZN2BL | 特種六角ナット | | 3 | 01 |
| 50 | **VJ869400** | Washer Black | | ワッシャー | | 3 | 02 |
| 60 | **CB028970** | Knob Black | | ツマミ | INPUT VOLUME | | 03 |
| 70 | -- | Hexagonal Nut | 7.0X0.75 | 六角ナット | with Volume | | |
| 80 | -- | Washer | | ワッシャー | with Volume | | |

∗: New Parts

RANK: Japan only

# ■ JACK UNIT（ジャックユニット）

**• Top view**

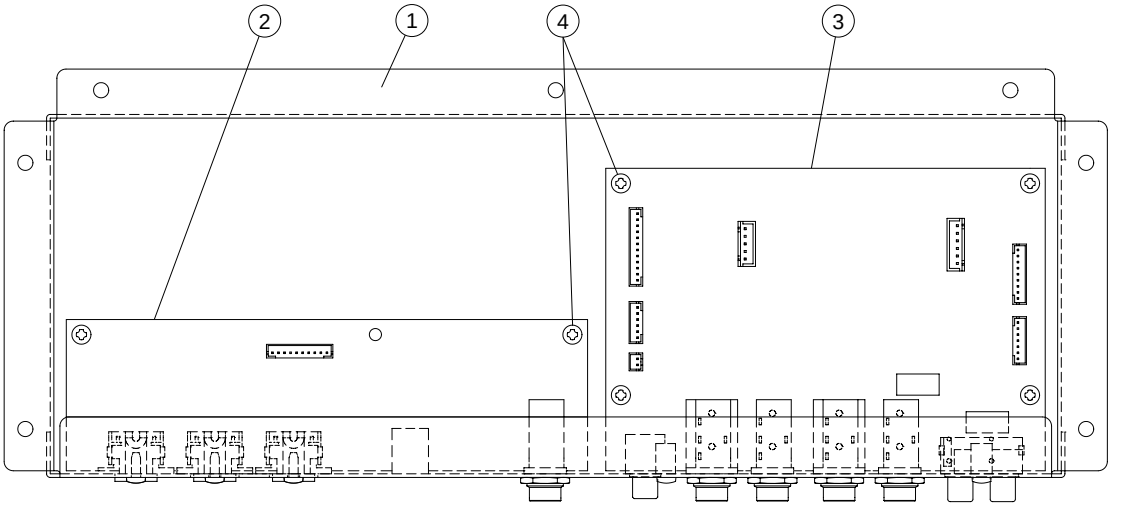


**• Front view**

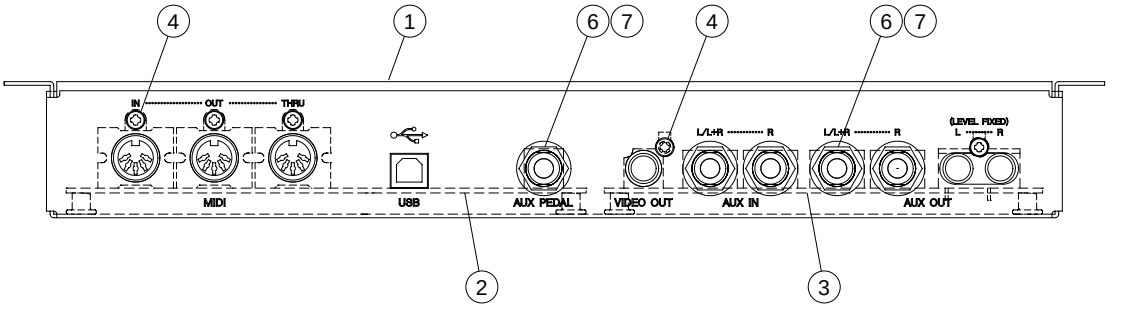


| | REF NO. | PART NO. | DESCRIPTION | | 部品名 | REMARKS | QTY | RANK |
|---|---|---|---|---|---|---|---|---|
| | | | JACK UNIT | | ジャックユニット | CVP-206/CVP-206M/CVP-206C | | |
| | | -- | Jack Unit | | ジャックユニット | (WA57470) | | |
| * | 1 | **WA574800** | Angle, Jack | | ジャック金具印刷品 | | | |
| * | 2 | **WA182500** | Circuit Board | DJK | DJKシート | | | |
| | 3 | **V7148100** | Circuit Board | A-JACK | A－JACKシート | | | 12 |
| | 4 | **EP600190** | Bind Head Tapping Screw-B | 3.0X8 MFZN2BL | ＋バインドBタイト | | 11 | 01 |
| | 6 | **VJ869400** | Washer Black | | ワッシャー | | 5 | 02 |
| | 7 | **VB508600** | Hexagonal Nut | 12.0 14X2 MFZN2BL | 特種六角ナット | | 5 | 01 |

*: New Parts

RANK: Japan only

# ■ SIDE BOARD ASSEMBLY (側板 Ass'y)

• **Top view**

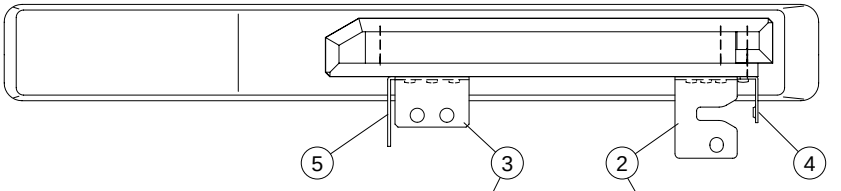


• **Side view**

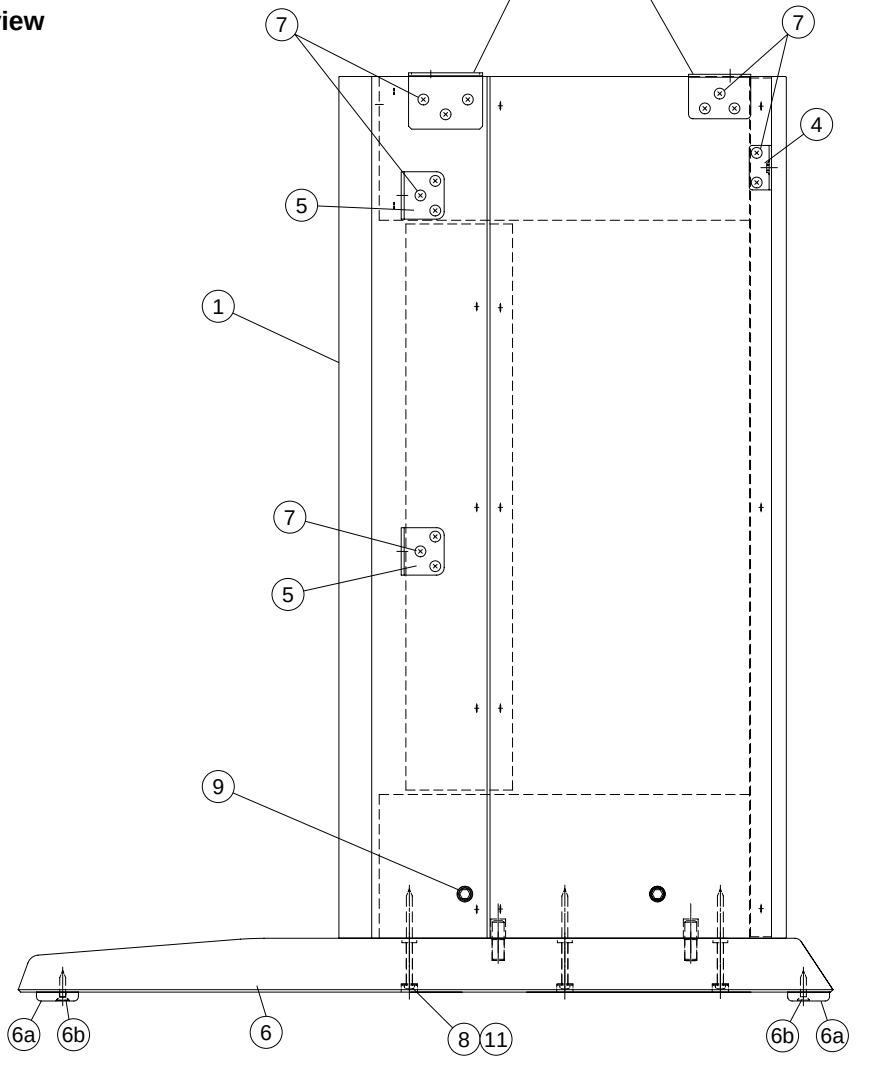

## ● SIDE BOARD ASSEMBLY L（側板 Ass'y (L)）

| | REF NO. | PART NO. | DESCRIPTION | | 部品名 | REMARKS | QTY | RANK |
|---|---|---|---|---|---|---|---|---|
| | | | SISE BOARD ASSEMBLY L | LEFT | 側板Ａｓｓ’ｙ（Ｌ） | CVP-206/CVP-206M/CVP-206C | | |
| | | **V7101200** | Side Board Assembly L | LEFT | 側板Ａｓｓ’ｙ（Ｌ） | CVP-206 | | 16 |
| | | **V7101300** | Side Board Assembly L | LEFT | 側板Ａｓｓ’ｙ（Ｌ） | CVP-206M U,B,E,N,K | | 15 |
| * | | **WA582300** | Side Board Assembly L | LEFT | 側板Ａｓｓ’ｙ（Ｌ） | CVP-206C U,B,E,N,K | | |
| | 1 | **--** | Side Board L | LEFT | 側板（Ｌ） | CVP-206 (V710280) | | |
| | 1 | **--** | Side Board L | LEFT | 側板（Ｌ） | CVP-206M U,B,E,N,K (V710290) | | |
| | 1 | **--** | Side Board L | LEFT | 側板（Ｌ） | CVP-206C U,B,E,N,K (WA58250) | | |
| | 2 | **VS295500** | Holder, Stand L | LEFT | ＳＴ．受け金具Ｌ | | | 05 |
| | 3 | **VZ885300** | Angle Bracket | 2.0 L MFZN2 | アングル | | | 04 |
| | 4 | **VQ958300** | Holder, Back Board | | 裏板取付金具 | | | 05 |
| | 5 | **VZ972000** | Stand Angle Bracket | A | スタンド締結金具Ａ | | 2 | 04 |
| | 6 | **V7104000** | Stand Base Assembly L | LEFT | 妻土台Ａｓｓ’ｙ（Ｌ） | CVP-206 | | 10 |
| | 6 | **V7104100** | Stand Base Assembly L | LEFT | 妻土台Ａｓｓ’ｙ（Ｌ） | CVP-206M U,B,E,N,K | | 10 |
| * | 6 | **WA582900** | Stand Base Assembly L | LEFT | 妻土台Ａｓｓ’ｙ（Ｌ） | CVP-206C U,B,E,N,K | | |
| | 6a | **CB006650** | Foot C Black | | スベリ座 | | 2 | 03 |
| | 6b | **EM040020** | Flat Head Tapping Screw-1 | 4.0X20 MFZN2BL | ＋皿ＴＰ　１種 | | 4 | 01 |
| | 7 | **EP030580** | Bind Head Tapping Screw-1 | 3.5X20 MFZN2BL | ＋バインドＴＰ１種 | | 14 | 01 |
| | 8 | **VV444000** | Pan Head Tapping Screw-1 | 4.0X65 MFZN2Y | ＋ナベＴＰ　１種 | | 3 | 01 |
| | 9 | **V5251600** | Nut | 6.0X33 TYPE M | 鬼目ナット | | 2 | 01 |
| | 11 | **VK287600** | Flat Washer | 4.0X12X1.0 MFZN2Y | 平座金みがき丸 | | 3 | 01 |

*: New Parts　　RANK: Japan only

## ● SIDE BOARD ASSEMBLY R（側板 Ass'y (R)）

| | REF NO. | PART NO. | DESCRIPTION | | 部品名 | REMARKS | QTY | RANK |
|---|---|---|---|---|---|---|---|---|
| | | | SIDE BOARD ASSEMBLY R | RIGHT | 側板Ａｓｓ’ｙ（Ｒ） | CVP-206/CVP-206M/CVP-206C | | |
| | | **V7101400** | Side Board Assembly R | RIGHT | 側板Ａｓｓ’ｙ（Ｒ） | CVP-206 | | 16 |
| | | **V7101500** | Side Board Assembly R | RIGHT | 側板Ａｓｓ’ｙ（Ｒ） | CVP-206M U,B,E,N,K | | 15 |
| * | | **WA582400** | Side Board Assembly R | RIGHT | 側板Ａｓｓ’ｙ（Ｒ） | CVP-206C U,B,E,N,K | | |
| | 1 | **--** | Side Board R | RIGHT | 側板（Ｒ） | CVP-206 (V710310) | | |
| | 1 | **--** | Side Board R | RIGHT | 側板（Ｒ） | CVP-206M U,B,E,N,K (V710320) | | |
| | 1 | **--** | Side Board R | RIGHT | 側板（Ｒ） | CVP-206C U,B,E,N,K (WA58260) | | |
| | 2 | **VS295600** | Holder, Stand R | RIGHT | ＳＴ．受け金具Ｒ | | | 05 |
| | 3 | **VZ885300** | Angle Bracket | 2.0 L MFZN2 | アングル | | | 04 |
| | 4 | **VQ958300** | Holder, Back Board | | 裏板取付金具 | | | 05 |
| | 5 | **VZ972000** | Stand Angle Bracket | A | スタンド締結金具Ａ | | 2 | 04 |
| | 6 | **V7104200** | Stand Base Assembly R | RIGHT | 妻土台Ａｓｓ’ｙ（Ｒ） | CVP-206 | | 10 |
| | 6 | **V7104300** | Stand Base Assembly R | RIGHT | 妻土台Ａｓｓ’ｙ（Ｒ） | CVP-206M U,B,E,N,K | | 10 |
| * | 6 | **WA583000** | Stand Base Assembly R | RIGHT | 妻土台Ａｓｓ’ｙ（Ｒ） | CVP-206C U,B,E,N,K | | |
| | 6a | **CB006650** | Foot C Black | | スベリ座 | | 2 | 03 |
| | 6b | **EM040020** | Flat Head Tapping Screw-1 | 4.0X20 MFZN2BL | ＋皿ＴＰ　１種 | | 4 | 01 |
| | 7 | **EP030580** | Bind Head Tapping Screw-1 | 3.5X20 MFZN2BL | ＋バインドＴＰ１種 | | 14 | 01 |
| | 8 | **VV444000** | Pan Head Tapping Screw-1 | 4.0X65 MFZN2Y | ＋ナベＴＰ　１種 | | 3 | 01 |
| | 9 | **V5251600** | Nut | 6.0X33 TYPE M | 鬼目ナット | | 2 | 01 |
| | 11 | **VK287600** | Flat Washer | 4.0X12X1.0 MFZN2Y | 平座金みがき丸 | | 3 | 01 |

*: New Parts　　RANK: Japan only

# ■ PEDAL BOX ASSEMBLY（ペダル Box Ass'y）

• **Bottom view**

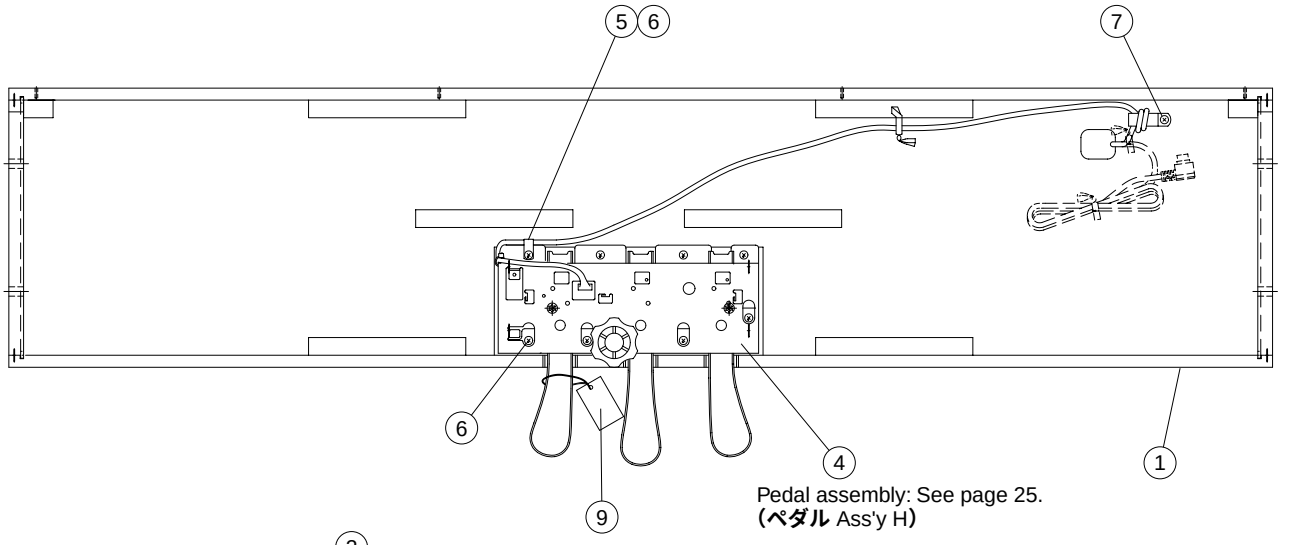


Pedal assembly: See page 25.
（ペダル Ass'y H）

• **Front view**

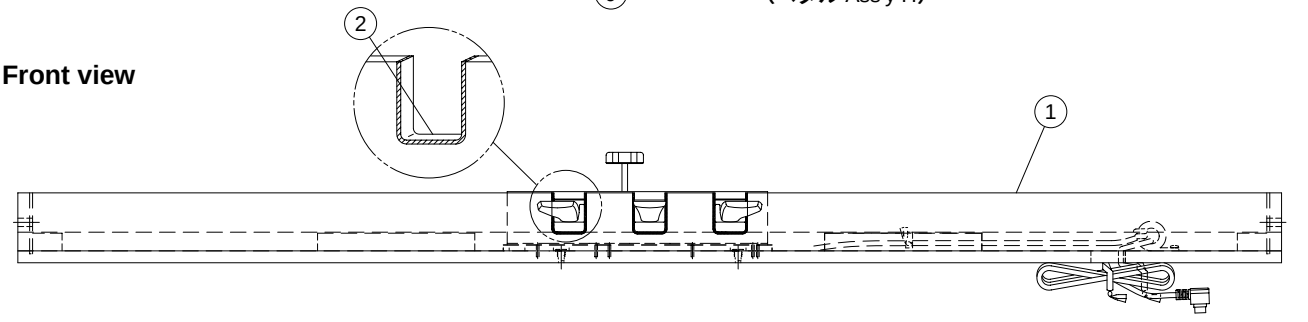


| REF NO. | PART NO. | DESCRIPTION | | 部品名 | REMARKS | QTY | RANK |
|---|---|---|---|---|---|---|---|
| | | PEDAL BOX ASSEMBLY | | ペダルＢｏｘＡｓｓ’ｙ | CVP-206/CVP-206M/CVP-206C | | |
| | -- | Pedal Box Assembly | | ペダルＢｏｘＡｓｓ’ｙ | CVP-206 (V710160) | | |
| | -- | Pedal Box Assembly | | ペダルＢｏｘＡｓｓ’ｙ | CVP-206M U,B,E,N,K (V710170) | | |
| | -- | Pedal Box Assembly | | ペダルＢｏｘＡｓｓ’ｙ | CVP-206C U,B,E,N,K (WA58330) | | |
| 1 | **V7105400** | Pedal Box | | ペダルＢｏｘ | CVP-206 | | 11 |
| 1 | **V7105500** | Pedal Box | | ペダルＢｏｘ | CVP-206M U,B,E,N,K | | 10 |
| * 1 | **WA583400** | Pedal Box | | ペダルＢｏｘ | CVP-206C U,B,E,N,K | | |
| 2 | **VU464300** | Felt Red | 115X12X2 | フェルト | | 3 | 03 |
| 4 | **V0053100** | Pedal Assembly | (H) 1VR 2SW PK-LF | ペダルＡｓｓ’ｙ（Ｈ） | | | 19 |
| 5 | **CB065520** | Nylon Clamp | NK-3N | ナイロンクランプ | | | 01 |
| 6 | **EP040230** | Bind Head Tapping Screw-1 | 4.0X14 MFZN2Y | ＋バインドＴＰ１種 | | 8 | 01 |
| 7 | **03747270** | Truss Head Tapping Screw-1 | 4.0X12 MFZN2BL | ＋トラスＴＰ　１種 | | | 01 |
| 9 | **VD966100** | Caution Label | | ペダル注意書 | | | 03 |

*: New Parts

RANK: Japan only

# ■ PEDAL ASSEMBLY (ペダル Ass'y (H))

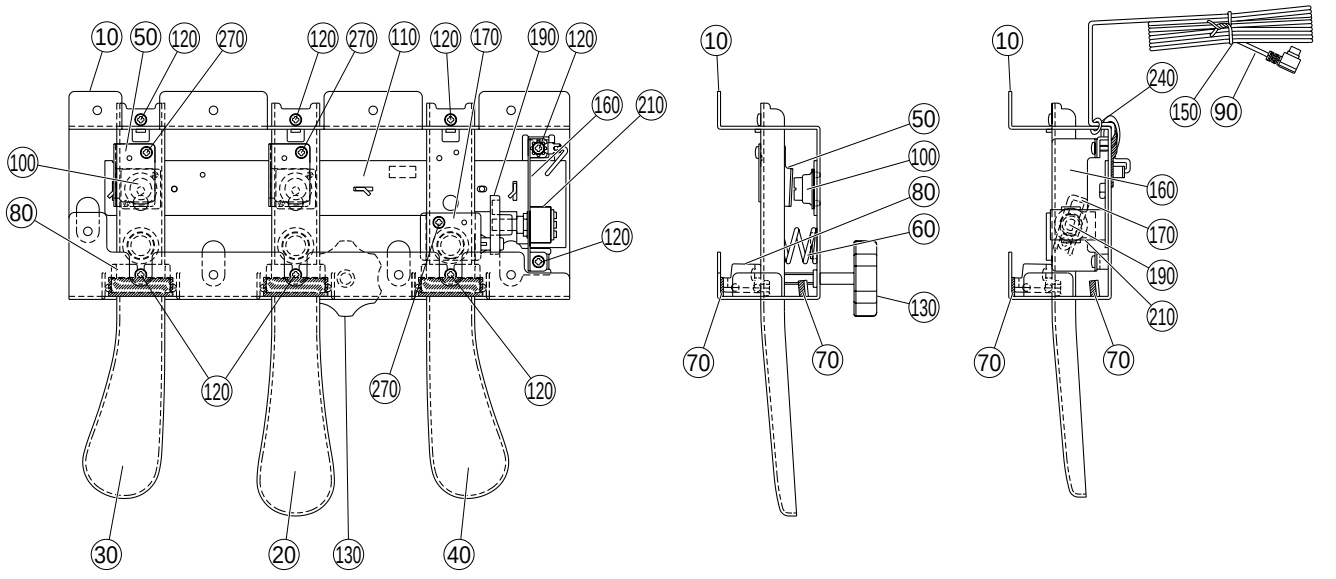


| REF NO. | PART NO. | DESCRIPTION | | 部品名 | REMARKS | QTY | RANK |
|---|---|---|---|---|---|---|---|
| | | PEDAL ASSEMBLY | (H) 1VR 2SW PK-LF | ペダルAss'y (H) | CVP-206/CVP-206M/CVP-206C | | |
| | **V0053100** | Pedal Assembly | (H) 1VR 2SW PK-LF | ペダルAss'y (H) | | | 19 |
| 10 | **VU339700** | Pedal Frame | | ペダルフレーム | | | 09 |
| 20 | **VU362000** | Pedal Piece C | CENTER | ペダル本体セット (C) | Sostenuto pedal | | 08 |
| 30 | **VU362100** | Pedal Piece L | LEFT | ペダル本体セット (L) | Left pedal | | 08 |
| 40 | **VU362200** | Pedal Piece R | RIGHT | ペダル本体セット (R) | Damper pedal | | 08 |
| 50 | **VV433500** | Actuator | PEDAL | アクチュエータ | | 2 | 03 |
| 60 | **VP348100** | Pedal Spring | | ペダルバネ | | 3 | 03 |
| 70 | **VU346500** | Felt Black | PA | フェルトPA | | 6 | 03 |
| 80 | **VU339800** | Shutter | PEDAL | シャッター | | 3 | 03 |
| 90 | **V0044700** | Connector Assembly | PK-LF | PKケーブル－LF | | | 08 |
| 100 | **VU456000** | Rubber Contact | PEDAL DOME | 接点ゴムドーム | | 2 | 03 |
| 110 | **VZ151300** | Circuit Board | PEDAL(SW) | ペダルシート | | | 07 |
| 120 | **EP600190** | Bind Head Tapping Screw-B | 3.0X8 MFZN2BL | ＋バインドBタイト | | 8 | 01 |
| 130 | **VU379700** | Adjuster | | アジャスター | | | 02 |
| 140 | **TX920280** | Grease | G-31KA 50g | グリス | | | 10 |
| 160 | **VU455600** | Holder, VR | PEDAL | 可変抵抗取付金具 | | | 03 |
| 170 | **VV475800** | Holder, VR | PEDAL | VRボス | | | 03 |
| 190 | **VV476000** | Actuator, VR | PEDAL | VRアクチュエータ | | | 03 |
| 210 | **VZ151400** | Circuit Board | PEDAL VR | ペダルVRシート | | | 07 |
| 240 | **CB069250** | Cord Holder | BK-1 | インシュロックタイ | | 2 | 01 |
| 260 | **--** | Spacer | PC 0.5T | スペーサー | For Adjust Pedal offset (WA15130) | | |
| 260 | **--** | Spacer | PVC 0.2T | スペーサー | (WB19170) | | |
| 260 | **V9836700** | Spacer | FIBER 1T | スペーサー | | | 01 |
| 260 | **V9851400** | Spacer | FIBER 0.5T | スペーサー | | | 01 |
| 270 | **EP600190** | Bind Head Tapping Screw-B | 3.0X8 MFZN2BL | ＋バインドBタイト | | 3 | 01 |
| 270 | **EP600220** | Bind Head Tapping Screw-B | 3.0X10 MFZN2Y | ＋バインドBタイト | | 3 | 01 |

*: New Parts

RANK: Japan only

# ■ FRONT BOARD ASSEMBLY（前板 Ass'y）

**• Rear view**

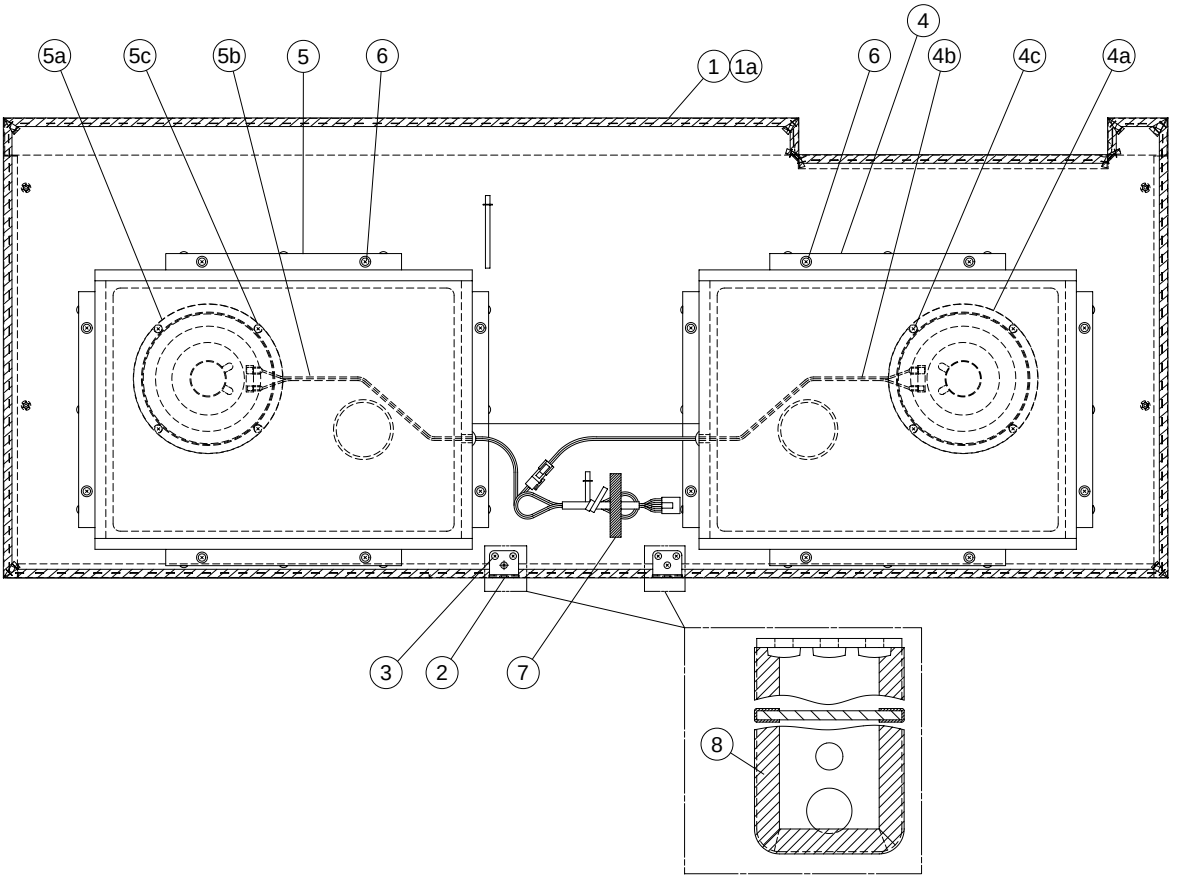


| REF NO. | PART NO. | DESCRIPTION | | 部品名 | REMARKS | QTY | RANK |
|---|---|---|---|---|---|---|---|
| | | FRONT BOARD ASSEMBLY | | 前板Ass'y | CVP-206/CVP-206M/CVP-206C | | |
| | -- | Front Board Assembly | | 前板Ass'y | CVP-206 (V710200) | | |
| | -- | Front Board Assembly | | 前板Ass'y | CVP-206M U,B,E,N,K (V710210) | | |
| | -- | Front Board Assembly | | 前板Ass'y | CVP-206C U,B,E,N,K (WA58390) | | |
| 1 | **V7107000** | Front Board Assembly | | 前板集成 | CVP-206 | | 16 |
| 1 | **V7107100** | Front Board Assembly | | 前板集成 | CVP-206M U,B,E,N,K | | 16 |
| * 1 | **WA584000** | Front Board Assembly | | 前板集成 | CVP-206C U,B,E,N,K | | |
| 1a | **VA789400** | Nut | B4X11.5 MFZN2BL | 鬼目ナット | | 20 | 01 |
| 2 | **VZ972000** | Stand Angle Bracket | A | スタンド締結金具A | | 2 | 04 |
| 3 | **EP030340** | Bind Head Tapping Screw-1 | 3.5X12 MFZN2BL | ＋バインドＴＰ１種 | | 6 | 01 |
| 4 | -- | Speaker Box Assembly L | LEFT | ＳＰ．ＢＯＸ Ａｓｓ'ｙ | (V711380) | | |
| 4a | **X0203A00** | Speaker | 16cm 6 ohm 40W | スピーカ | WOOFER | | 09 |
| 4b | -- | Connector Assembly | W-SPL 2P-600 | Ｗ－ＳＰＬ束線 | (V754280) | | |
| 4c | **EP040250** | Bind Head Tapping Screw-1 | 4.0X16 MFZN2BL | ＋バインドＴＰ１種 | | 4 | 01 |
| 5 | -- | Speaker Box Assembly R | RIGHT | ＳＰ．ＢＯＸ Ａｓｓ'ｙ | (V711390) | | |
| 5a | **X0203A00** | Speaker | 16cm 6ohm 40W | スピーカ | WOOFER | | 09 |
| 5b | -- | Connector Assembly | W-SPR 6P/2P-860 | Ｗ－ＳＰＲ束線 | (V754290) | | |
| 5c | **EP040250** | Bind Head Tapping Screw-1 | 4.0X16 MFZN2BL | ＋バインドＴＰ１種 | | 4 | 01 |
| 6 | **V5877100** | Truss Head Screw | 4.0X30 MFZN2Y | ＋トラス小ネジ | | 16 | 01 |
| 7 | -- | Adhesive Tape | 12X70m | 粘着テープ | (V255510) | | |
| 8 | **22764900** | Adhesive Tape | 12X50m | 粘着テープ | | | 08 |

*: New Parts

RANK: Japan only

# ■ MA60 ASSEMBLY（MA60 Ass'y）

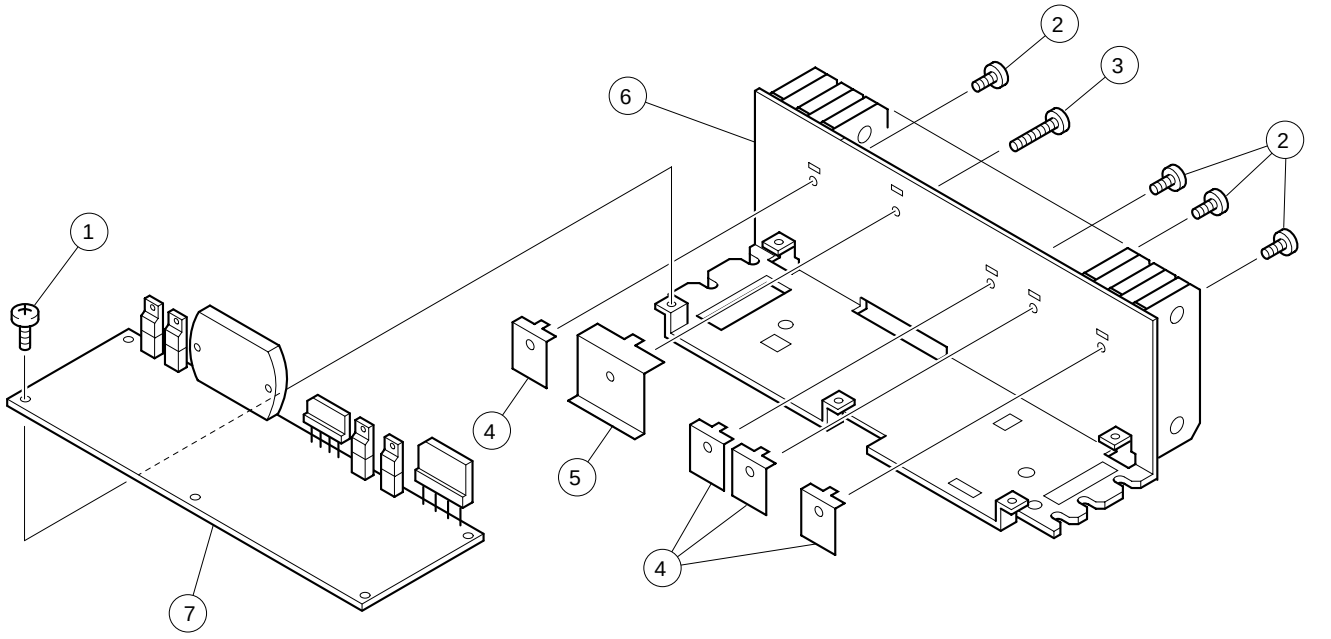


| REF NO. | PART NO. | DESCRIPTION | | 部品名 | REMARKS | QTY | RANK |
|---|---|---|---|---|---|---|---|
| | | MA60 ASSEMBLY | | MA60Ass'y | CVP-206/CVP-206M/CVP-206C | | |
| | **VT144300** | MA60 Assembly | | MA60Ass'y | J,U | | |
| | **VT144400** | MA60 Assembly | | MA60Ass'y | B,E,N,K | | |
| 1 | **EP640410** | Bind Head Tapping Screw-B | 4.0X8 MFZN2Y | ＋バインドBタイト | | 5 | 01 |
| 2 | **EP600220** | Bind Head Tapping Screw-B | 3.0X10 MFZN2Y | ＋バインドBタイト | | 4 | 01 |
| 3 | **EP600390** | Bind Head Tapping Screw-B | 3.0X16 MFZN2Y | ＋バインドBタイト | | | 01 |
| 4 | **VT461100** | Transistor Holder | A | トランジスターホルダーA | | 4 | 03 |
| 5 | **VT461200** | Transistor Holder | B | トランジスターホルダーB | | | 03 |
| 6 | **VT444300** | Heat Sink | | 放熱器 | | | 11 |
| 7 | **VT143900** | Circuit Board | MA60 | MA60シート | J,U | | 18 |
| 7 | **VT144000** | Circuit Board | MA60 | MA60シート | B,E,N,K | | 22 |

∗: New Parts

RANK: Japan only

# ■ FU ASSEMBLY（FU Ass'y）

• **Top view**

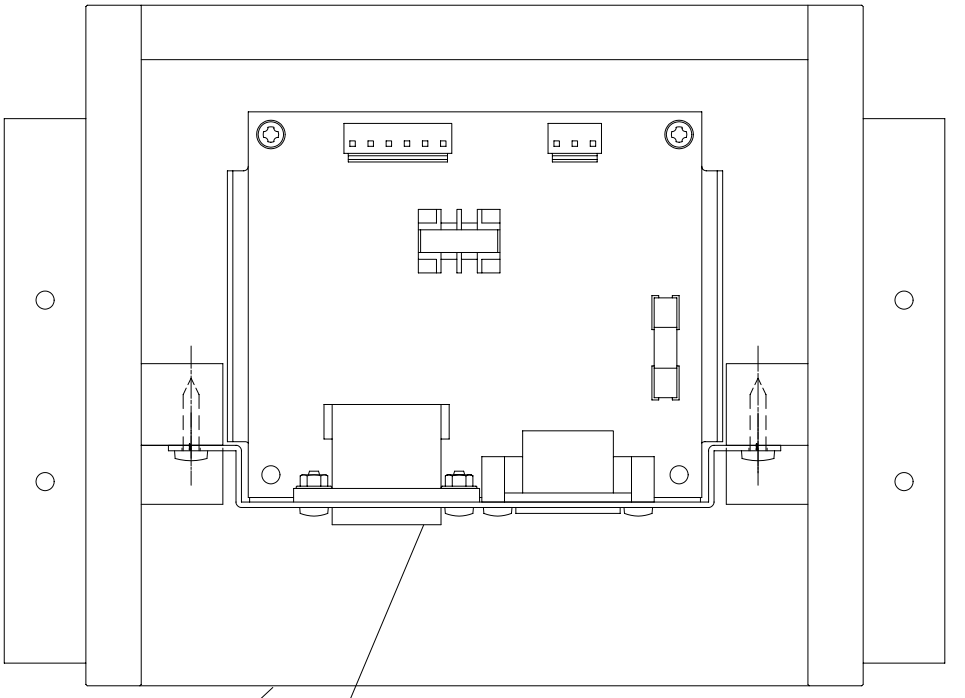

1 2 FU60 assembly: See page 29.
（FU60 Ass'y）

• **Rear view**

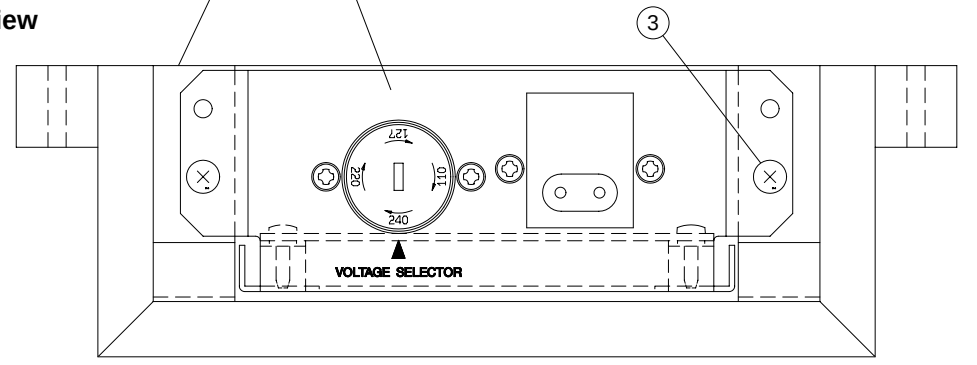


| REF NO. | PART NO. | DESCRIPTION | | 部品名 | REMARKS | QTY | RANK |
|---|---|---|---|---|---|---|---|
| | | FU ASSEMBLY | | FU Ass'y | CVP-206/CVP-206M/CVP-206C | | |
| | -- | FU Assembly | | FU Ass'y | J (V775230) | | |
| | -- | FU Assembly | | FU Ass'y | U (V775240) | | |
| | -- | FU Assembly | | FU Ass'y | B,E,K (V775250) | | |
| | -- | FU Assembly | | FU Ass'y | N (V775260) | | |
| 1 | -- | FU Box | | FU BOX | (V775210) | | |
| 2 | VT152000 | FU60 Assembly | | FU60 Ass'y | J | | 10 |
| 2 | VT152100 | FU60 Assembly | | FU60 Ass'y | U | | 10 |
| 2 | VT152200 | FU60 Assembly | | FU60 Ass'y | B,E,K | | 10 |
| 2 | V7773400 | FU60 Assembly | | FU60 Ass'y | N | | |
| 3 | EP030260 | Bind Head Tapping Screw-1 | 3.5X16 MFZN2BL | ＋バインドＴＰ１種 | | 2 | 01 |

∗: New Parts

RANK: Japan only

# ■ FU60 ASSEMBLY（FU60 Ass'y）

**• Top view**

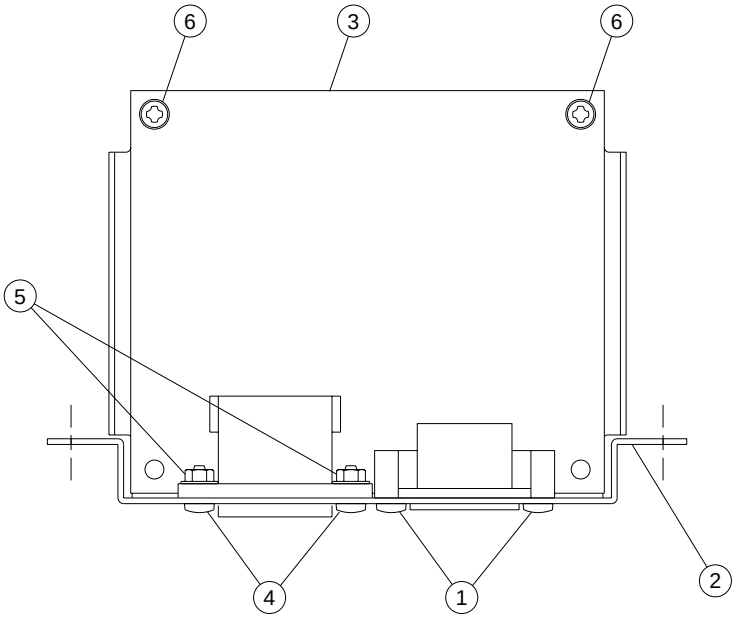


**• Front view**

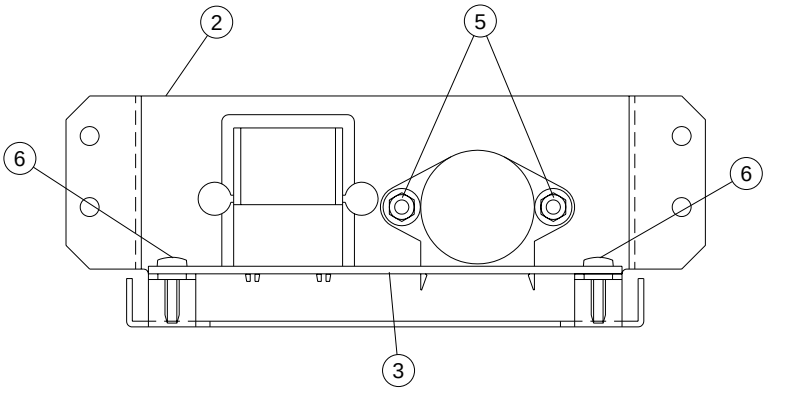


| REF NO. | PART NO. | DESCRIPTION | | 部品名 | REMARKS | QTY | RANK |
|---|---|---|---|---|---|---|---|
| | | FU60 ASSEMBLY | | FU60Ass'y | CVP-206/CVP-206M/CVP-206C | | |
| | **VT152000** | FU60 Assembly | | FU60Ass'y | J | | 10 |
| | **VT152100** | FU60 Assembly | | FU60Ass'y | U | | 10 |
| | **VT152200** | FU60 Assembly | | FU60Ass'y | B,E,K | | 10 |
| | **V7773400** | FU60 Assembly | | FU60Ass'y | N | | |
| 1 | **EP600190** | Bind Head Tapping Screw-B | 3.0X8 MFZN2BL | ＋バインドBタイト | | 2 | 01 |
| 2 | **WB449600** | Plate, AC Inlet | cushion | AC金具集成 | J,U,B,E,K | | |
| * 2 | **WB449800** | Panel, AC Inlet | cushion | AC金具集成 | N | | |
| 3 | **--** | Circuit Board | FU60 | FU60シート | J (VT15140) | | |
| 3 | **--** | Circuit Board | FU60 | FU60シート | U (VT15150) | | |
| 3 | **--** | Circuit Board | FU60 | FU60シート | B,E,K (VT15160) | | |
| 3 | **--** | Circuit Board | FU60 | FU60シート | N (VT15290) | | |
| 4 | **EG330380** | Bind Head Screw | 3.0X10 MFZN2BL | ＋バインド小ネジ | N | 2 | 01 |
| 5 | **VA211900** | Hexagonal Nut | 3.0 MFZN2Y | フランジ付六角ナット | N | 2 | 01 |
| 6 | **VE683000** | Bind Head Tapping Screw-B | 3.0X12 MFZN2Y | ＋バインドBタイト | | 2 | 01 |

*: New Parts

RANK: Japan only

# ■ KEYBOARD ASSEMBLY（GHD 鍵盤 Ass 'y）

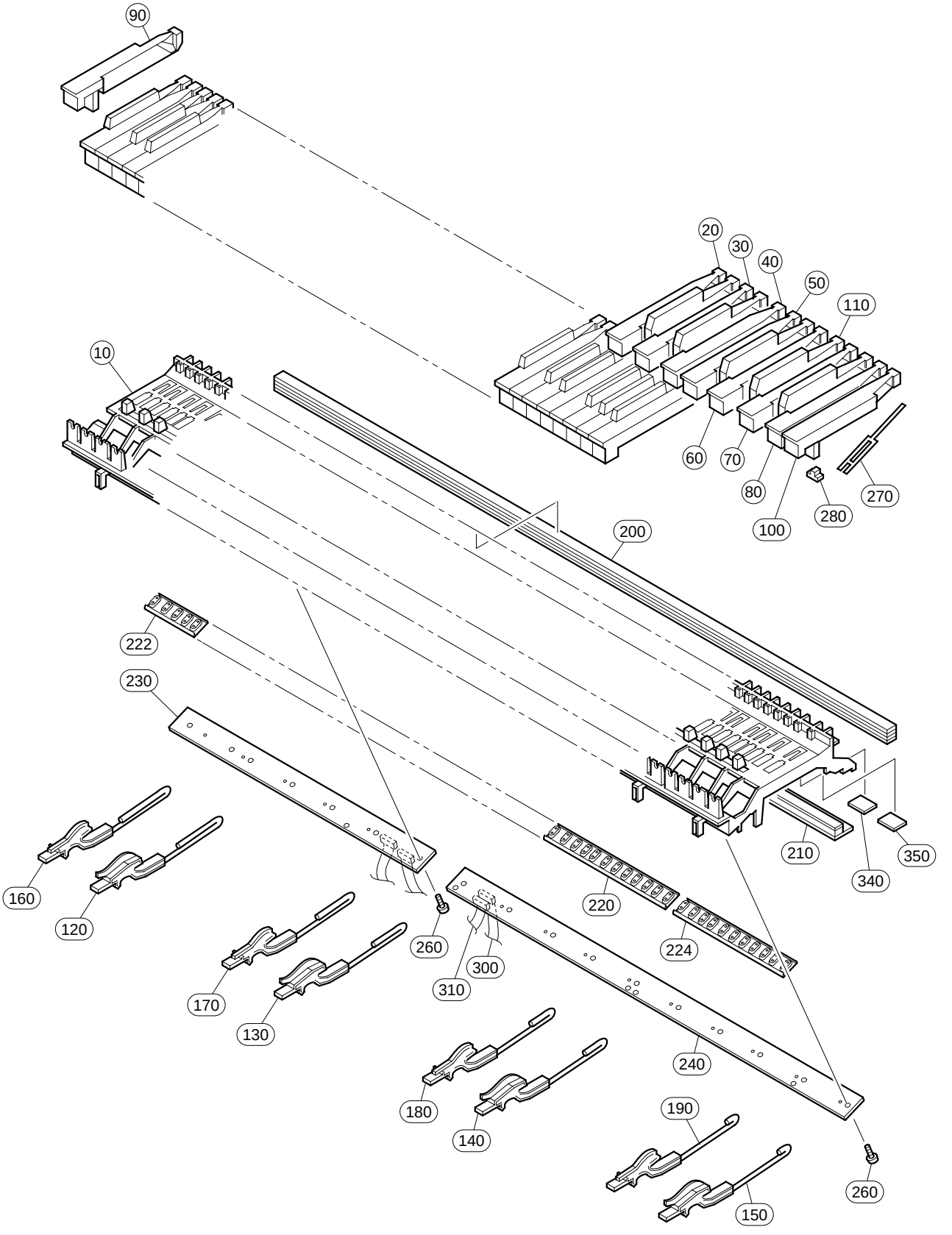

| REF NO. | PART NO. | DESCRIPTION | | 部品名 | REMARKS | QTY | RANK |
|---|---|---|---|---|---|---|---|
| | | KEYBOARD ASSEMBLY | GHD A88 K6 | ＧＨＤ鍵盤Ａｓｓ’ｙ | CVP-206/CVP-206M/CVP-206C | | |
| | **VZ705400** | Keyboard Assembly | GHD A88 K6 | ＧＨＤ鍵盤Ａｓｓ’ｙ | | | 63 |
| 10 | **--** | MK Frame | | フレーム８８アウトサート | (VU42210) | | |
| 20 | **VU101000** | White Key | C | 白鍵C | | 7 | 05 |
| 30 | **VU101100** | White Key | D | 白鍵D | | 7 | 05 |
| 40 | **VU101200** | White Key | E | 白鍵E | | 7 | 05 |
| 50 | **VU101300** | White Key | F | 白鍵F | | 7 | 05 |
| 60 | **VU101400** | White Key | G | 白鍵G | | 7 | 05 |
| 70 | **VU101500** | White Key | A | 白鍵A | | 7 | 05 |
| 80 | **VU101600** | White Key | B | 白鍵B | | 8 | 05 |
| 90 | **VU101700** | White Key | A' | 白鍵A’ | | | 05 |
| 100 | **VU101800** | White Key | C' | 白鍵C’ | | | 05 |
| 110 | **VU102100** | Black Key | | 黒鍵 | | 36 | 05 |
| 120 | **VY828500** | Hammer Assembly, White Key | W1 A1-F1 | ドーム用ハンマーW1 | | 13 | 05 |
| 130 | **VY828600** | Hammer Assembly, White Key | W2 G3-E3 | ドーム用ハンマーW2 | | 13 | 05 |
| 140 | **VY828700** | Hammer Assembly, White Key | W3 F3-D5 | ドーム用ハンマーW3 | | 13 | 05 |
| 150 | **VY828800** | Hammer Assembly, White Key | W4 E5-C7 | ドーム用ハンマーW4 | | 13 | 05 |
| 160 | **VY828900** | Hammer Assembly, Black Key | B1 A#-1-F#1 | ドーム用ハンマーB1 | | 9 | 05 |
| 170 | **VY829000** | Hammer Assembly, Black Key | B2 G#1-D#3 | ドーム用ハンマーB2 | | 9 | 05 |
| 180 | **VY829100** | Hammer Assembly, Black Key | B3 F#3-C#5 | ドーム用ハンマーB3 | | 9 | 05 |
| 190 | **VY829200** | Hammer Assembly, Black Key | B4 D#5-A#6 | ドーム用ハンマーB4 | | 9 | 05 |
| 200 | **VU342100** | Stopper Felt | U 1229X12X14.8T | ストッパーU88 | | | 09 |
| 210 | **V7640100** | Stopper Felt | L 1239.5X28X10.1T | ストッパーL88＿W | | | 07 |
| 220 | **VY846700** | Rubber Contact | OCTAVE 12KEY D-C# | シーソードームD－C# | | 6 | 08 |
| 222 | **VY846800** | Rubber Contact | OCTAVE 5KEY A-C# | シーソードームA－C# | A-1-C0# | | 08 |
| 224 | **VY846900** | Rubber Contact | OCTAVE 11KEY D-C | シーソードームD－C | D6-C7 | | 08 |
| 230 | **VZ705200** | Circuit Board | GH-D_SW L | GH－D＿SWシートL | | | 12 |
| 240 | **VZ705300** | Circuit Board | GH-D_SW H | GH－D＿SWシートH | | | 13 |
| 260 | **EP600270** | Bind Head Tapping Screw-P | 3.0X10 MFZN2Y | ＋バインドＰタイト | | 17 | 01 |
| 260 | **VT413400** | Bind Head Tapping Screw-P | 3.0X10 MFZN2 | ＋バインドＰタイト | | 17 | 01 |
| 270 | **VZ417900** | Spring | GH R | スプリング R | | 88 | 03 |
| 270 | **V2798500** | Spring | GH R | スプリング R | | 88 | |
| 280 | **VU237500** | Rubber | | 駆動ラバー | | 88 | 03 |
| 280 | **V2211300** | Rubber | | 駆動ラバー２ | | 88 | 03 |
| 290 | **--** | Grease | G-1006Y | グリス | (V627430) | | |
| 300 | **VU341800** | Connector Assembly | BLOCK KRD 9P | 中継束線ブロック | | | 06 |
| 310 | **VU341900** | Connector Assembly | NOTE KRD 12P | 中継束線ノート | | | 07 |
| 340 | **VV467900** | Stopper Support | A 35.5 20+ | ストッパーサポートA | | 7 | 03 |
| 350 | **VV468100** | Stopper Support | B 24 20- | ストッパーサポートB | | 12 | 03 |
| | | | | | | | |
| | | JIGS | | 工具 | | | |
| | **TX000670** | Rod | | ロッド | | | 99 |

∗: New Parts

RANK: Japan only

# ■ FDD UNIT（FDD ユニット）

**• Adhesive tape installation view**

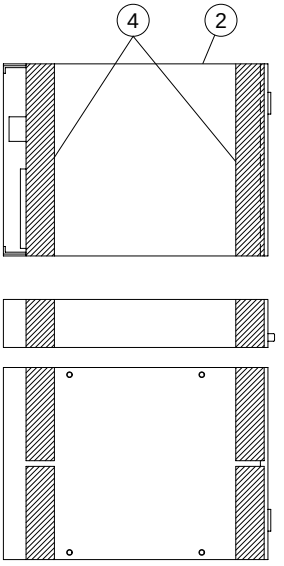


**• ⑦ Holder, FDD（FDD金具）**

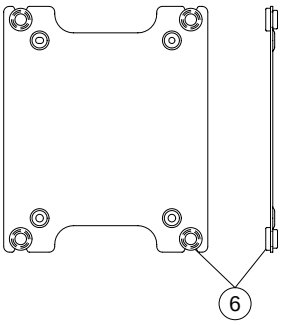


**• Rear view**

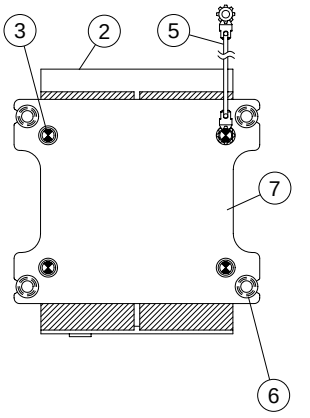


**• Top view**

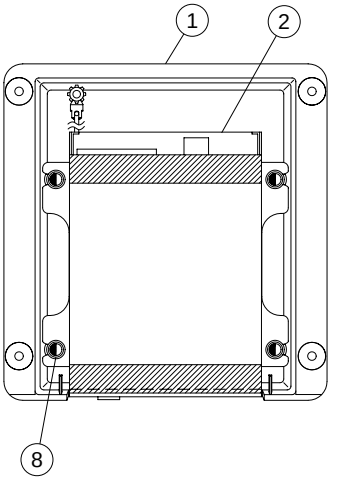


| REF NO. | PART NO. | DESCRIPTION | | 部品名 | REMARKS | QTY | RANK |
|---|---|---|---|---|---|---|---|
| | | FDD UNIT | | FDD UNIT | CVP-206/CVP-206M/CVP-206C | | |
| | -- | FDD Unit | | FDD UNIT | (V706210) | | |
| 1 | **V7093800** | FDD Cover | CL | FDDカバー成形品 | | | 03 |
| 2 | **V6492300** | Floppy Disk Drive | ALPS DF354H | 3.5″FDD | | | 13 |
| 3 | **EG330150** | Bind Head Screw | 3.0X5 MFZN2Y | ＋バインド小ネジ | | 4 | 01 |
| 4 | -- | Adhesive Tape Black | 15X30m | アセテートテープ | (V256440) | | |
| 5 | -- | GND Wire | L=120 | GND線材120 | (V686040) | | |
| 6 | **VA121600** | Bushing | | ゴムブッシュ | | 4 | 01 |
| 7 | -- | Holder, FDD | 1.2 | FDD金具 | (V523680) | | |
| 8 | **V2276900** | PW Head Tapping Screw-B | 3.0X8-8 MFZN2BL | ＋PWHBタイト | | 4 | 01 |

∗: New Parts

RANK: Japan only

# ■ BENCH (BC-201DR)（椅子）

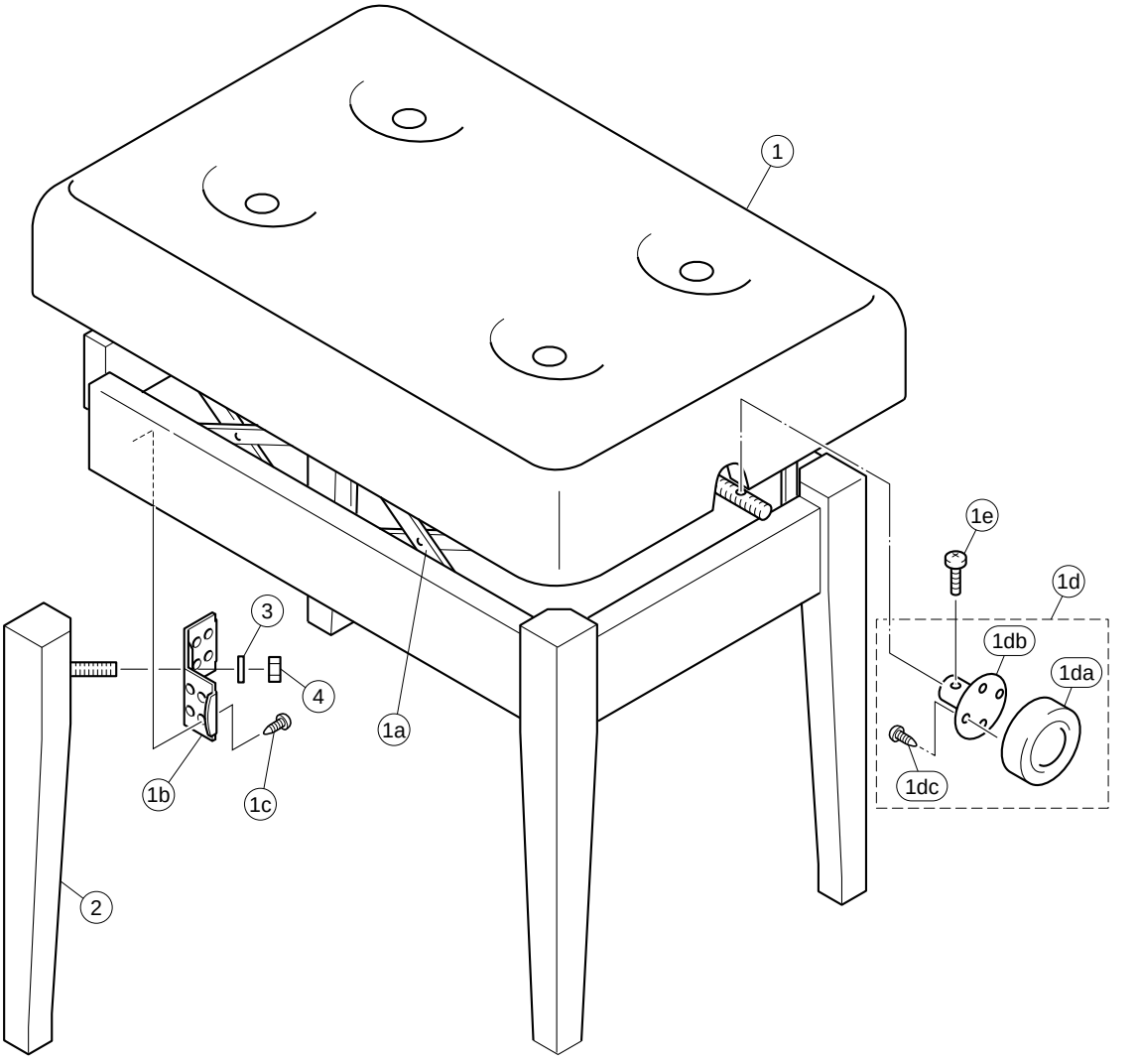


| | REF NO. | PART NO. | DESCRIPTION | | 部品名 | REMARKS | QTY | RANK |
|---|---|---|---|---|---|---|---|---|
| | | | BENCH | BC-201DR | 同梱品セット椅子 | CVP206 J | | |
| * | | **V8029600** | Bench | BC-201DR | 同梱品セット椅子 | | | |
| | A | -- | Bench | BC-201DR | 椅子 | (V802970) | | |
| | 1 | **V8029900** | Bench Board Assembly | DR | 座板ユニット | | | 33 |
| | 1a | **V7662500** | Lift Assembly | | 昇降ユニット | | | 19 |
| | 1b | **V7396200** | Holder, Leg | | 脚取付隅金具 | | 4 | 03 |
| | 1c | **EP030260** | Bind Head Tapping Screw-1 | 3.5X16 MFZN2BL | ＋バインドＴＰ１種 | | 32 | 01 |
| | 1d | **V8080900** | Knob Assembly | DR | ニギリＡｓｓ’ｙ | | | 08 |
| | 1da | -- | Knob | DR | ニギリ塗装品 | (V767170) | | |
| | 1db | **V7662700** | Angle | | ニギリ金具 | | | |
| | 1dc | **EP040250** | Bind Head Tapping Screw-1 | 4.0X16 MFZN2BL | ＋バインドＴＰ１種 | | 4 | 01 |
| | 1e | **VR060200** | Bind Head Tapping Screw-B | 4.0X16 MFZN2BL | ＋バインドＢタイト | | | 01 |
| | 2 | **V7672000** | Leg Assembly | DR | 脚柱Ａｓｓ’ｙ | | 4 | 08 |
| | 3 | **V7678600** | Spring Washer | #2 10.0 MFZN2BL | バネ座金 | | 4 | |
| | 4 | **V7678700** | Hexagonal Nut | #1 10.0X1.25 MFZN2 | 六角ナット | | 4 | 01 |
| | | | | | | | | |
| | | | ACCESSORY | | 付属品 | | | |
| | | -- | Wrench | | ベンチスパナ | (V688680) | | |

*: New Parts

RANK: Japan only

# ■ BENCH (BC-102DR/BC-102MH/BC-102CH)（椅子）

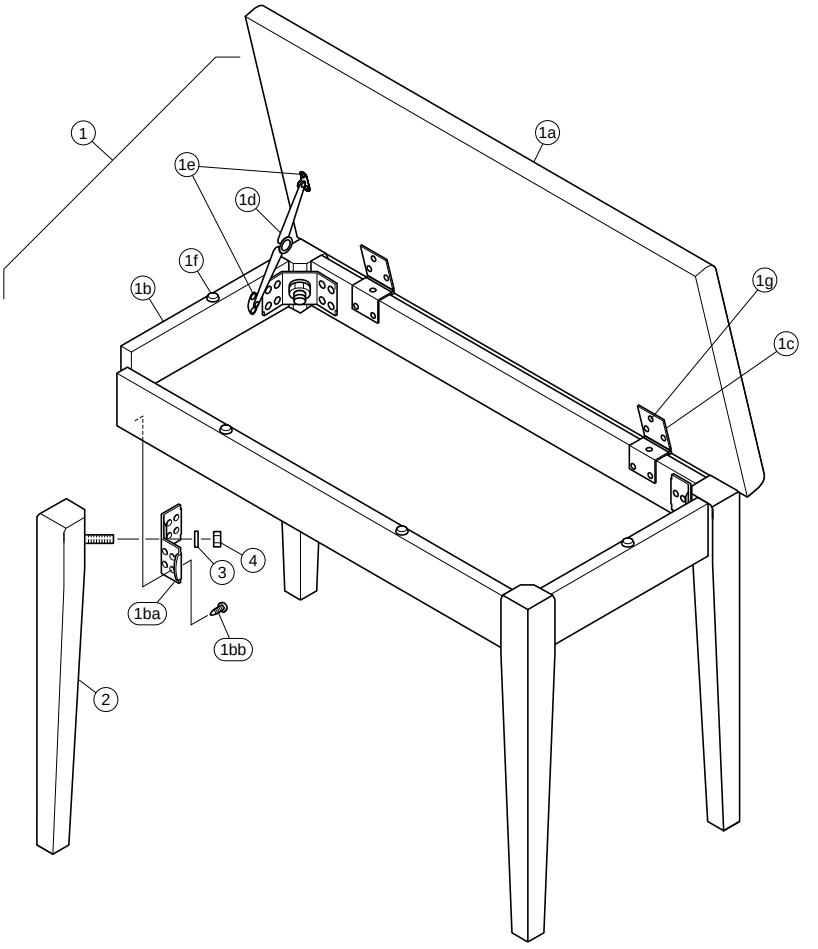


| | REF NO. | PART NO. | DESCRIPTION | | 部品名 | REMARKS | | QTY | RANK |
|---|---|---|---|---|---|---|---|---|---|
| | | | BENCH | BC-102DR/MH/CH | 同梱品セット椅子 | CVP206/CVP206M/CVP206C U | | | |
| * | | **V7563900** | Bench | BC-102DR | 同梱品セット椅子 | CVP-206 U | | | |
| * | | **V7564000** | Bench | BC-102MH | 同梱品セット椅子 | CVP-206M U | | | |
| * | | **V8878700** | Bench | BC-102CH | 同梱品セット椅子 | CVP-206C U | | | |
| | A | -- | Bench | BC-102DR | 椅子 | CVP-206 | (V769710) | | |
| | A | -- | Bench | BC-102MH | 椅子 | CVP-206M | (V769720) | | |
| | A | -- | Bench | BC-102CH | 椅子 | CVP-206C | (V889970) | | |
| | 1 | **V7695800** | Bench Board Assembly | DR | 座板ユニット | CVP-206 | | | 21 |
| | 1 | **V7695900** | Bench Board Assembly | MH | 座板ユニット | CVP-206M | | | 21 |
| | 1 | **V8899900** | Bench Board Assembly | CH | 座板ユニット | CVP-206C | | | 22 |
| | 1a | -- | Bench Board Assembly | DR | 座板集成 | CVP-206 | (V769170) | | |
| | 1a | -- | Bench Board Assembly | MH | 座板集成 | CVP-206M | (V769180) | | |
| | 1a | -- | Bench Board Assembly | CH | 座板集成 | CVP-206C | (V890010) | | |
| | 1b | -- | Seat Support Assembly | DR | 譜面入れ集成 | CVP-206 | (V769620) | | |
| | 1b | -- | Seat Support Assembly | MH | 譜面入れ集成 | CVP-206M | (V769630) | | |
| | 1b | -- | Seat Support Assembly | CH | 譜面入れ集成 | CVP-206C | (V890020) | | |
| | 1ba | **V7396200** | Holder, Leg | | 脚取付隅金具 | | | 4 | 03 |
| | 1bb | **EP030260** | Bind Head Tapping Screw-1 | 3.5X16 MFZN2BL | ＋バインドＴＰ１種 | | | 32 | 01 |
| | 1c | **V7696900** | Hinge | 2.0 1 MFZN2BL | 蝶番 | | | 2 | 05 |
| | 1d | **VB896300** | Stay | MFNZN2BL | ステー | | | | 04 |
| | 1e | **EP030250** | Bind Head Tapping Screw-1 | 3.5X14 MFZN2BL | ＋バインドＴＰ１種 | | | 4 | 01 |
| | 1f | -- | Spacer Felt Black | 15X15X3T | スペーサー | | (V792090) | 4 | |
| | 1g | **EM030340** | Flat Head Tapping Screw-1 | 3.5X14 MFZN2BL | ＋皿ＴＰ１種 | | | 12 | 01 |
| | 2 | **V7692000** | Leg Assembly | DR | 脚柱Ａｓｓ’ｙ | CVP-206 | | 4 | 08 |
| | 2 | **V7692100** | Leg Assembly | MH | 脚柱Ａｓｓ’ｙ | CVP-206M | | 4 | 08 |
| | 2 | **V8900000** | Leg Assembly | CH | 脚柱Ａｓｓ’ｙ | CVP-206C | | 4 | |
| | 3 | **V7678600** | Spring Washer | #2 10.0 MFZN2BL | バネ座金 | | | 4 | |
| | 4 | **V7678700** | Hexagonal Nut | #1 10.0X1.25 MFZN2 | 六角ナット | | | 4 | 01 |
| | | | | | | | | | |
| | | | ACCESSORY | | 付属品 | | | | |
| | | -- | Wrench | | ベンチスパナ | | (V688680) | | |

*: New Parts

RANK: Japan only

# ■ BENCH (BC-100DR/BC-100MH/BC-100CH)（椅子）

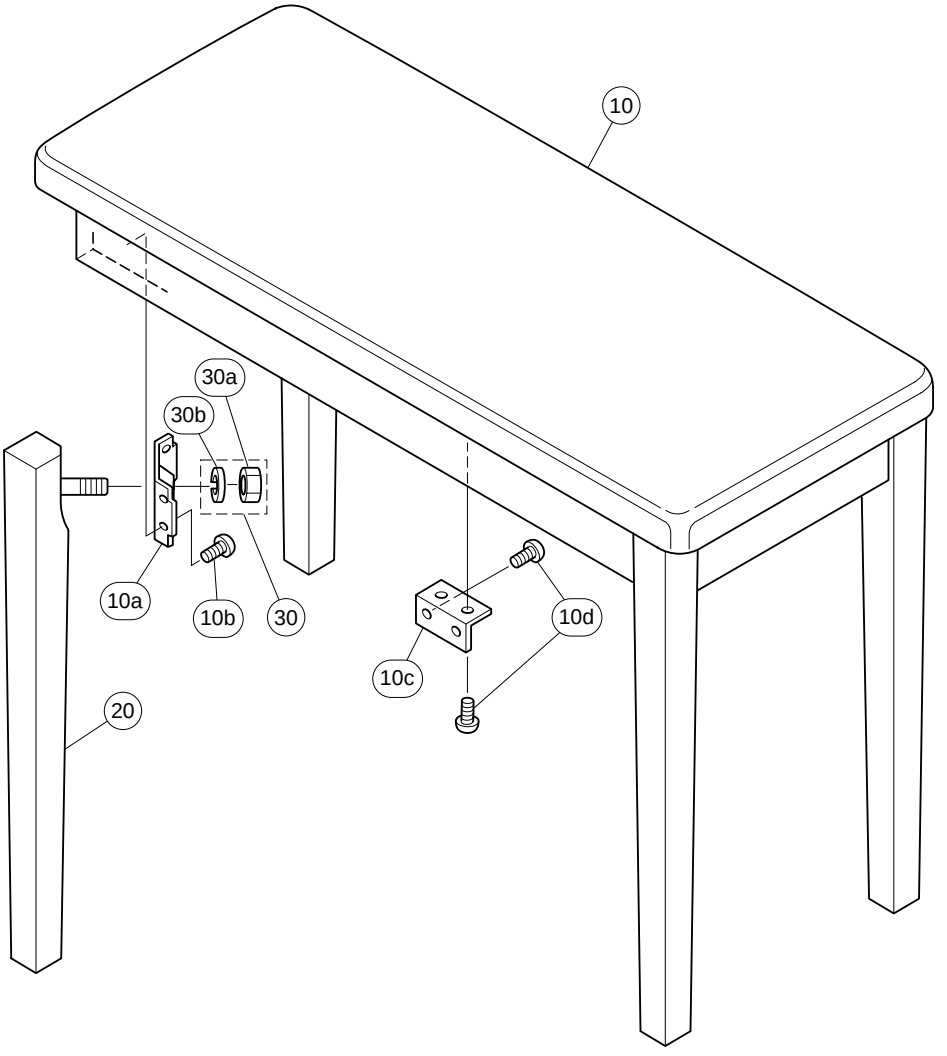


| | REF NO. | PART NO. | DESCRIPTION | | 部品名 | REMARKS | QTY | RANK |
|---|---|---|---|---|---|---|---|---|
| | | | BENCH | BC-100DR/MH/CH | 同梱品セット椅子 | CVP206/206M/206C N.K | | |
| * | | **V5531400** | Bench | BC-100DR | 同梱品セット椅子 | CVP-206 N,K | | |
| * | | **V5531500** | Bench | BC-100MH | 同梱品セット椅子 | CVP-206M N,K | | |
| | | **V5531600** | Bench | BC-100CH | 同梱品セット椅子 | CVP-206C N,K | | |
| | A | -- | Bench | BC-100DR | 椅子集成 | CVP-206 (V553200) | | |
| | A | -- | Bench | BC-100MH | 椅子集成 | CVP-206M (V553210) | | |
| | A | -- | Bench | BC-100CH | 椅子集成 | CVP-206C (V553220) | | |
| | 10 | **V5532900** | Bench Board Assembly | DR | 座板Ａｓｓ’ｙ | CVP-206 | | 16 |
| | 10 | **V5533000** | Bench Board Assembly | MH | 座板Ａｓｓ’ｙ | CVP-206M | | 15 |
| | 10 | **V5533100** | Bench Board Assembly | CH | 座板Ａｓｓ’ｙ | CVP-206C | | 16 |
| | 10a | **AA016480** | Holder, Leg | | 脚取付隅金具 | | 4 | 02 |
| | 10b | **EP030190** | Bind Head Tapping Screw-1 | 3.5X16 MFZN2Y | ＋バインドＴＰ１種 | | 16 | 01 |
| | 10c | **VC969300** | Holder, Bench Board | | 座板固定金具 | | 4 | 03 |
| | 10d | **EP030170** | Bind Head Tapping Screw-1 | 3.5X14 MFZN2Y | ＋バインドＴＰ１種 | | 16 | 01 |
| | 20 | **V8176300** | Leg Assembly | DR | 脚柱集成 | CVP-206 | 4 | |
| | 20 | **V8176400** | Leg Assembly | MH | 脚柱集成 | CVP-206M | 4 | 11 |
| | 20 | **V8176500** | Leg Assembly | CH | 脚柱集成 | CVP-206C | 4 | |
| | 30 | **VS530500** | Screw Set | | ネジセット Ａｓｓ’ｙ | | | 03 |
| | 30a | **03761250** | Hexagonal Nut | #1 10.0X1.25 MFZN2 | 六角ナット | | 4 | 01 |
| | 30b | **03765820** | Spring Washer | #2 10.0 MFZN2Y | バネ座金 | | 4 | 01 |
| | | | | | | | | |
| | | | ACCESSORY | | 付属品 | | | |
| | | -- | Wrench | | ベンチスパナ | (V688680) | | |

*: New Parts

RANK: Japan only

# ■ ELECTRICAL PARTS（電気部品）

| | REF NO. | PART NO. | DESCRIPTION | | 部品名 | REMARKS | QTY | RANK |
|---|---|---|---|---|---|---|---|---|
| | | | ELECTRICAL PARTS | | 電気部品 | CVP-206/CVP-206/CVP-206C | | |
| | | **V7148100** | Circuit Board | A-JACK | A－JACKシート | (XZ888B0) | | 12 |
| * | | **WA182500** | Circuit Board | DJK | DJKシート | (WA18240)(X3632C0) | | |
| * | | **WA182600** | Circuit Board | PEDAL(DJK) | PEDAL(DJK)シート | (WA18240)(X3632C0) | | |
| * | | **WA454800** | Circuit Board | DM | DMシート | (X3789B0) | | |
| | | **--** | Circuit Board | FU60 | FU60シート | J (VT15140)(XQ395A0) | | |
| | | **--** | Circuit Board | FU60 | FU60シート | U (VT15150)(XQ395A0) | | |
| | | **--** | Circuit Board | FU60 | FU60シート | B,E,K (VT15160)(XQ395A0) | | |
| | | **--** | Circuit Board | FU60 | FU60シート | N (VT15290)(XQ395A0) | | |
| | | **VZ705300** | Circuit Board | GH-D_SW H | GH－D＿SWシートH | (XT241A0) | | 13 |
| | | **VZ705200** | Circuit Board | GH-D_SW L | GH－D＿SWシートL | (XT240A0) | | 12 |
| | | **V7135900** | Circuit Board | GLC | GLCシート | (V713570)(XZ883C0) | | 08 |
| | | **V7135800** | Circuit Board | GLL | GLLシート | (V713570)(XZ883C0) | | 08 |
| | | **V7136100** | Circuit Board | GLR | GLRシート | (V713570)(XZ883C0) | | 08 |
| | | **V8115900** | Circuit Board | HP | HPシート | (XQ795A0,XT162A0) | | 07 |
| | | **V7170200** | Circuit Board | INV | INVシート | (V713450)(XZ881C0) | | 05 |
| | | **V7134700** | Circuit Board | MV | MVシート | (V713450)(XZ881C0) | | 04 |
| | | **V7135100** | Circuit Board | PNCB | PNCBシート | (V713450)(XZ881C0) | | 05 |
| | | **V7134600** | Circuit Board | PNL | PNLシート | (V713450)(XZ881C0) | | 11 |
| | | **VT143900** | Circuit Board | MA60 | MA60シート | J,U (XQ393E0,XQ778F0) | | 18 |
| | | **VT144000** | Circuit Board | MA60 | MA60シート | B,E,N,K (XQ393E0,XQ778F0) | | 22 |
| | | **V7596600** | Circuit Board | MIC | MICシート | (XV507D0) | | 08 |
| | | **V7747300** | Circuit Board | NET1 | NET1シート | (XT123B0) | | 05 |
| | | **VZ151300** | Circuit Board | PEDAL(SW) | ペダルシート | (VZ15120)(XR780B0) | | 07 |
| | | **VZ151400** | Circuit Board | PEDAL VR | ペダルVRシート | (VZ15120)(XR780B0) | | 07 |
| | | **V7134800** | Circuit Board | PNCL | PNCLシート | (V713500)(X0080C0) | | 07 |
| | | **V7134900** | Circuit Board | PNCR | PNCRシート | (V713500)(X0080C0) | | 07 |
| | | **V7135200** | Circuit Board | PNR(PNR,ENC) | PNRシート | (XZ882E0) | | 18 |
| * | | **WA455200** | Circuit Board | SWX | SWXシート | (XZ895D0) | | |
| | | | | | | | | |
| | | **V7148100** | Circuit Board | A-JACK | A－JACKシート | (XZ888B0) | | 12 |
| | 00170 | **--** | Jumper Wire | 0.55 | ジャンパー線 | (VA07890) | | |
| | C0100 | **UR866470** | Electrolytic Cap. | 4.70 50.0V | ケミコン | | | 01 |
| | C0101 | **US063330** | Ceramic Capacitor-B (chip) | 3300P 50V K | チップセラ（B） | | | 01 |
| | C0102 | **US062470** | Ceramic Capacitor-SL(chip) | 470P 50V J | チップセラ（SL） | | | 01 |
| | C0103 | **UR866470** | Electrolytic Cap. | 4.70 50.0V | ケミコン | | | 01 |
| | C0120 | **UR866470** | Electrolytic Cap. | 4.70 50.0V | ケミコン | | | 01 |
| | C0121 | **US063330** | Ceramic Capacitor-B (chip) | 3300P 50V K | チップセラ（B） | | | 01 |
| | C0122 | **US062470** | Ceramic Capacitor-SL(chip) | 470P 50V J | チップセラ（SL） | | | 01 |
| | C0123 | **UR866470** | Electrolytic Cap. | 4.70 50.0V | ケミコン | | | 01 |
| | C0200 | **US062150** | Ceramic Capacitor-SL(chip) | 150P 50V J | チップセラ（SL） | | | 01 |
| | C0201 | **UR866470** | Electrolytic Cap. | 4.70 50.0V | ケミコン | | | 01 |
| | C0202 | **US062100** | Ceramic Capacitor-SL(chip) | 100P 50V J | チップセラ（SL） | | | 01 |
| | C0203 | **US145100** | Ceramic Capacitor-F (chip) | 0.1000 25V Z | チップセラ（F） | | | 01 |
| | C0204 | **UR848220** | Electrolytic Cap. | 220.00 25.0V | ケミコン | | | 01 |
| | C0205 | **UR866470** | Electrolytic Cap. | 4.70 50.0V | ケミコン | | | 01 |
| | C0206 | **US063100** | Ceramic Capacitor-B (chip) | 1000P 50V K | チップセラ（B） | | | 01 |
| | C0250 | **US062150** | Ceramic Capacitor-SL(chip) | 150P 50V J | チップセラ（SL） | | | 01 |
| | C0251 | **UR866470** | Electrolytic Cap. | 4.70 50.0V | ケミコン | | | 01 |
| | C0252 | **US062100** | Ceramic Capacitor-SL(chip) | 100P 50V J | チップセラ（SL） | | | 01 |
| | C0253 | **US145100** | Ceramic Capacitor-F (chip) | 0.1000 25V Z | チップセラ（F） | | | 01 |
| | C0254 | **UR848220** | Electrolytic Cap. | 220.00 25.0V | ケミコン | | | 01 |
| | C0255 | **UR866470** | Electrolytic Cap. | 4.70 50.0V | ケミコン | | | 01 |
| | C0256 | **US063100** | Ceramic Capacitor-B (chip) | 1000P 50V K | チップセラ（B） | | | 01 |
| | C0301 | **UA354560** | Mylar Capacitor | 0.0560 50V J | マイラーコン | | | 01 |
| | C0302 | **VR169200** | Monolithic Mylar Capacitor | ECQ-V1H474JL3 0.47 | 積層マイラーコン | | | 01 |
| | C0303 | **UA354270** | Mylar Capacitor | 0.0270 50V J | マイラーコン | | | 01 |
| | C0304 | **VR168700** | Monolithic Mylar Capacitor | ECQ-V1H224JL3 0.22 | 積層マイラーコン | | | 01 |
| | C0305 | **UA354100** | Mylar Capacitor | 0.0100 50V J | マイラーコン | | | 01 |
| | C0306 | **VR168300** | Monolithic Mylar Capacitor | ECQ-V1H104JL3 0.10 | 積層マイラーコン | | | 01 |
| | C0307 | **UA354120** | Mylar Capacitor | 0.0120 50V J | マイラーコン | | | 01 |
| | C0308 | **UA354390** | Mylar Capacitor | 0.0390 50V J | マイラーコン | | | 01 |
| | C0309 | **UA353220** | Mylar Capacitor | 2200P 50V J | マイラーコン | | | 01 |
| | C0310 | **UA354470** | Mylar Capacitor | 0.0470 50V J | マイラーコン | | | |
| | C0311 | **UA353180** | Mylar Capacitor | 1800P 50V J | マイラーコン | | | 01 |
| | C0312 | **UA354270** | Mylar Capacitor | 0.0270 50V J | マイラーコン | | | 01 |
| | C0313 | **UA353560** | Mylar Capacitor | 5600P 50V J | マイラーコン | | | |
| | C0314 | **UA352100** | Mylar Capacitor | 100P 50V J | マイラーコン | | | 01 |
| | C0320 | **US062470** | Ceramic Capacitor-SL(chip) | 470P 50V J | チップセラ（SL） | | | 01 |
| | C0401 | **UA354560** | Mylar Capacitor | 0.0560 50V J | マイラーコン | | | 01 |

*: New Parts

RANK: Japan only

| REF NO. | PART NO. | DESCRIPTION | | 部品名 | REMARKS | QTY | RANK |
|---|---|---|---|---|---|---|---|
| C0402 | **VR169200** | Monolithic Mylar Capacitor | ECQ-V1H474JL3 0.47 | 積層マイラーコン | | | 01 |
| C0403 | **UA354270** | Mylar Capacitor | 0.0270 50V J | マイラーコン | | | 01 |
| C0404 | **VR168700** | Monolithic Mylar Capacitor | ECQ-V1H224JL3 0.22 | 積層マイラーコン | | | 01 |
| C0405 | **UA354100** | Mylar Capacitor | 0.0100 50V J | マイラーコン | | | 01 |
| C0406 | **VR168300** | Monolithic Mylar Capacitor | ECQ-V1H104JL3 0.10 | 積層マイラーコン | | | 01 |
| C0407 | **UA354120** | Mylar Capacitor | 0.0120 50V J | マイラーコン | | | 01 |
| C0408 | **UA354390** | Mylar Capacitor | 0.0390 50V J | マイラーコン | | | 01 |
| C0409 | **UA353220** | Mylar Capacitor | 2200P 50V J | マイラーコン | | | 01 |
| C0410 | **UA354470** | Mylar Capacitor | 0.0470 50V J | マイラーコン | | | |
| C0411 | **UA353180** | Mylar Capacitor | 1800P 50V J | マイラーコン | | | 01 |
| C0412 | **UA354270** | Mylar Capacitor | 0.0270 50V J | マイラーコン | | | 01 |
| C0413 | **UA353560** | Mylar Capacitor | 5600P 50V J | マイラーコン | | | |
| C0414 | **UA352100** | Mylar Capacitor | 100P 50V J | マイラーコン | | | 01 |
| C0420 | **US062470** | Ceramic Capacitor-SL(chip) | 470P 50V J | チップセラ（SL） | | | 01 |
| C0520 | **UR848220** | Electrolytic Cap. | 220.00 25.0V | ケミコン | | | 01 |
| C0521 | **UR848220** | Electrolytic Cap. | 220.00 25.0V | ケミコン | | | 01 |
| C0531 | **US064100** | Ceramic Capacitor-B (chip) | 0.0100 50V K | チップセラ（B） | | | 01 |
| C0540 | **US063100** | Ceramic Capacitor-B (chip) | 1000P 50V K | チップセラ（B） | | | 01 |
| C0541 | **US063100** | Ceramic Capacitor-B (chip) | 1000P 50V K | チップセラ（B） | | | 01 |
| C0600 | **UR866470** | Electrolytic Cap. | 4.70 50.0V | ケミコン | | | 01 |
| C0601 | **US063100** | Ceramic Capacitor-B (chip) | 1000P 50V K | チップセラ（B） | | | 01 |
| C0602 | **US063680** | Ceramic Capacitor-B (chip) | 6800P 50V K | チップセラ（B） | | | 01 |
| C0610 | **UR866470** | Electrolytic Cap. | 4.70 50.0V | ケミコン | | | 01 |
| C0612 | **US063680** | Ceramic Capacitor-B (chip) | 6800P 50V K | チップセラ（B） | | | 01 |
| C0620 | **US063100** | Ceramic Capacitor-B (chip) | 1000P 50V K | チップセラ（B） | | | 01 |
| C0640 | **US063100** | Ceramic Capacitor-B (chip) | 1000P 50V K | チップセラ（B） | | | 01 |
| CN500 | **VB390800** | Connector Base Post | PH 12P TE | コネクタベースポスト | | | 01 |
| CN510 | **VB390400** | Connector Base Post | PH 8P TE | コネクタベースポスト | | | 01 |
| CN520 | **VB390500** | Connector Base Post | PH 9P TE | コネクタベースポスト | | | 03 |
| CN530 | **VB390300** | Connector Base Post | PH 7P TE | コネクタベースポスト | | | 01 |
| CN540 | **VB389800** | Connector Base Post | PH 2P TE | コネクタベースポスト | | | 01 |
| D0200 | **VB493900** | Diode | MA221 | ダイオード | | | 01 |
| D0640 | **VB493900** | Diode | MA221 | ダイオード | | | 01 |
| IC100 | **XF291A00** | IC | UPC4570G2 | IC | OP AMP | | 03 |
| IC200 | **XT131A00** | IC | LA6517M-TE-R | IC | OP AMP | | 04 |
| IC300 | **XY487A00** | IC | M5229FP | IC | EQUALIZER | | 03 |
| IC400 | **XY487A00** | IC | M5229FP | IC | EQUALIZER | | 03 |
| JK600 | **VL080500** | Phone Jack | YKB21-5076 | ホーンジャック | AUX IN L/L+R | | 02 |
| JK610 | **VS115400** | Phone Jack Black | LGR4609-7000 | ホーンコネクタ（黒） | AUX IN R | | 01 |
| JK620 | **VL080500** | Phone Jack | YKB21-5076 | ホーンジャック | AUX OUT L/L+R | | 02 |
| JK630 | **VS115400** | Phone Jack Black | LGR4609-7000 | ホーンコネクタ（黒） | AUX OUT R | | 01 |
| JK640 | **VP599300** | Pin Jack | 2P YKC21-3120 | ピンジャック 2P | AUX OUT LEVEL FIXED L/R | | 02 |
| JK650 | **VI311100** | Pin Jack | 1P YKC21-3017 | ピンジャック 1P | VIDEO OUT | | 01 |
| L0540 | **V3085000** | Choke Coil | R-5C.10uH | チョークコイル１０μH | | | |
| L0541 | **--** | Jumper Wire | 0.55 | ジャンパー線 | (VD04170) | | |
| L0600 | **GE300670** | Ferrite Bead | BL02RN2-R62T4 | フェライトビーズ | | | 02 |
| L0620 | **GE300670** | Ferrite Bead | BL02RN2-R62T4 | フェライトビーズ | | | 02 |
| L0640 | **GE300670** | Ferrite Bead | BL02RN2-R62T4 | フェライトビーズ | | | 02 |
| R0100 | **RD357100** | Carbon Resistor (chip) | 10.0K 63M J | チップ抵抗 | | | 01 |
| R0101 | **RD357100** | Carbon Resistor (chip) | 10.0K 63M J | チップ抵抗 | | | 01 |
| R0102 | **RD356330** | Carbon Resistor (chip) | 3.3K 63M J | チップ抵抗 | | | 01 |
| R0103 | **RD355100** | Carbon Resistor (chip) | 100.0 63M J | チップ抵抗 | | | 01 |
| R0120 | **RD357100** | Carbon Resistor (chip) | 10.0K 63M J | チップ抵抗 | | | 01 |
| R0121 | **RD357100** | Carbon Resistor (chip) | 10.0K 63M J | チップ抵抗 | | | 01 |
| R0122 | **RD356330** | Carbon Resistor (chip) | 3.3K 63M J | チップ抵抗 | | | 01 |
| R0123 | **RD355100** | Carbon Resistor (chip) | 100.0 63M J | チップ抵抗 | | | 01 |
| R0200 | **RD357100** | Carbon Resistor (chip) | 10.0K 63M J | チップ抵抗 | | | 01 |
| R0201 | **RD357100** | Carbon Resistor (chip) | 10.0K 63M J | チップ抵抗 | | | 01 |
| R0203 | **RD354330** | Carbon Resistor (chip) | 33.0 63M J | チップ抵抗 | | | 01 |
| R0204 | **RD356100** | Carbon Resistor (chip) | 1.0K 63M J | チップ抵抗 | | | 01 |
| R0250 | **RD357100** | Carbon Resistor (chip) | 10.0K 63M J | チップ抵抗 | | | 01 |
| R0251 | **RD357100** | Carbon Resistor (chip) | 10.0K 63M J | チップ抵抗 | | | 01 |
| R0253 | **RD354330** | Carbon Resistor (chip) | 33.0 63M J | チップ抵抗 | | | 01 |
| R0254 | **RD356100** | Carbon Resistor (chip) | 1.0K 63M J | チップ抵抗 | | | 01 |
| R0301 | **RD356270** | Carbon Resistor (chip) | 2.7K 63M J | チップ抵抗 | | | 01 |
| R0302 | **RD357220** | Carbon Resistor (chip) | 22.0K 63M J | チップ抵抗 | | | 01 |
| R0303 | **RD356270** | Carbon Resistor (chip) | 2.7K 63M J | チップ抵抗 | | | 01 |
| R0304 | **RD357180** | Carbon Resistor (chip) | 18.0K 63M J | チップ抵抗 | | | 01 |
| R0305 | **RD356100** | Carbon Resistor (chip) | 1.0K 63M J | チップ抵抗 | | | 01 |
| R0306 | **RD357220** | Carbon Resistor (chip) | 22.0K 63M J | チップ抵抗 | | | 01 |

∗: New Parts

RANK: Japan only

| REF NO. | PART NO. | DESCRIPTION | | 部品名 | REMARKS | QTY | RANK |
|---|---|---|---|---|---|---|---|
| R0307 | **RD356180** | Carbon Resistor (chip) | 1.8K 63M J | チップ抵抗 | | | 01 |
| R0308 | **RD357180** | Carbon Resistor (chip) | 18.0K 63M J | チップ抵抗 | | | 01 |
| R0309 | **RD357150** | Carbon Resistor (chip) | 15.0K 63M J | チップ抵抗 | | | 01 |
| R0310 | **RD356470** | Carbon Resistor (chip) | 4.7K 63M J | チップ抵抗 | | | 01 |
| R0311 | **RD350000** | Carbon Resistor (chip) | 0 63M J | チップ抵抗 | | | 01 |
| R0312 | **RD357220** | Carbon Resistor (chip) | 22.0K 63M J | チップ抵抗 | | | 01 |
| R0313 | **RD357220** | Carbon Resistor (chip) | 22.0K 63M J | チップ抵抗 | | | 01 |
| R0314 | **RD356270** | Carbon Resistor (chip) | 2.7K 63M J | チップ抵抗 | | | 01 |
| R0320 | **RD356330** | Carbon Resistor (chip) | 3.3K 63M J | チップ抵抗 | | | 01 |
| R0321 | **RD356470** | Carbon Resistor (chip) | 4.7K 63M J | チップ抵抗 | | | 01 |
| R0322 | **RD356330** | Carbon Resistor (chip) | 3.3K 63M J | チップ抵抗 | | | 01 |
| R0323 | **RD356270** | Carbon Resistor (chip) | 2.7K 63M J | チップ抵抗 | | | 01 |
| R0401 | **RD356270** | Carbon Resistor (chip) | 2.7K 63M J | チップ抵抗 | | | 01 |
| R0402 | **RD357220** | Carbon Resistor (chip) | 22.0K 63M J | チップ抵抗 | | | 01 |
| R0403 | **RD356270** | Carbon Resistor (chip) | 2.7K 63M J | チップ抵抗 | | | 01 |
| R0404 | **RD357180** | Carbon Resistor (chip) | 18.0K 63M J | チップ抵抗 | | | 01 |
| R0405 | **RD356100** | Carbon Resistor (chip) | 1.0K 63M J | チップ抵抗 | | | 01 |
| R0406 | **RD357220** | Carbon Resistor (chip) | 22.0K 63M J | チップ抵抗 | | | 01 |
| R0407 | **RD356180** | Carbon Resistor (chip) | 1.8K 63M J | チップ抵抗 | | | 01 |
| R0408 | **RD357180** | Carbon Resistor (chip) | 18.0K 63M J | チップ抵抗 | | | 01 |
| R0409 | **RD357150** | Carbon Resistor (chip) | 15.0K 63M J | チップ抵抗 | | | 01 |
| R0410 | **RD356470** | Carbon Resistor (chip) | 4.7K 63M J | チップ抵抗 | | | 01 |
| R0411 | **RD350000** | Carbon Resistor (chip) | 0 63M J | チップ抵抗 | | | 01 |
| R0412 | **RD357220** | Carbon Resistor (chip) | 22.0K 63M J | チップ抵抗 | | | 01 |
| R0413 | **RD357220** | Carbon Resistor (chip) | 22.0K 63M J | チップ抵抗 | | | 01 |
| R0414 | **RD356270** | Carbon Resistor (chip) | 2.7K 63M J | チップ抵抗 | | | 01 |
| R0420 | **RD356330** | Carbon Resistor (chip) | 3.3K 63M J | チップ抵抗 | | | 01 |
| R0421 | **RD356470** | Carbon Resistor (chip) | 4.7K 63M J | チップ抵抗 | | | 01 |
| R0422 | **RD356330** | Carbon Resistor (chip) | 3.3K 63M J | チップ抵抗 | | | 01 |
| R0423 | **RD356270** | Carbon Resistor (chip) | 2.7K 63M J | チップ抵抗 | | | 01 |
| R0520 | **RD350000** | Carbon Resistor (chip) | 0 63M J | チップ抵抗 | | | 01 |
| R0530 | **RD350000** | Carbon Resistor (chip) | 0 63M J | チップ抵抗 | | | 01 |
| -0533 | **RD350000** | Carbon Resistor (chip) | 0 63M J | チップ抵抗 | | | 01 |
| R0540 | **RD356100** | Carbon Resistor (chip) | 1.0K 63M J | チップ抵抗 | | | 01 |
| R0600 | **RD356560** | Carbon Resistor (chip) | 5.6K 63M J | チップ抵抗 | | | 01 |
| R0601 | **RD356560** | Carbon Resistor (chip) | 5.6K 63M J | チップ抵抗 | | | 01 |
| R0610 | **RD356560** | Carbon Resistor (chip) | 5.6K 63M J | チップ抵抗 | | | 01 |
| R0611 | **RD356560** | Carbon Resistor (chip) | 5.6K 63M J | チップ抵抗 | | | 01 |
| R0620 | **RD355680** | Carbon Resistor (chip) | 680.0 63M J | チップ抵抗 | | | 01 |
| R0621 | **RD355680** | Carbon Resistor (chip) | 680.0 63M J | チップ抵抗 | | | 01 |
| R0630 | **RD355680** | Carbon Resistor (chip) | 680.0 63M J | チップ抵抗 | | | 01 |
| R0631 | **RD355680** | Carbon Resistor (chip) | 680.0 63M J | チップ抵抗 | | | 01 |
| R0640 | **RD355680** | Carbon Resistor (chip) | 680.0 63M J | チップ抵抗 | | | 01 |
| R0641 | **RD356470** | Carbon Resistor (chip) | 4.7K 63M J | チップ抵抗 | | | 01 |
| R0650 | **RD355680** | Carbon Resistor (chip) | 680.0 63M J | チップ抵抗 | | | 01 |
| R0651 | **RD356470** | Carbon Resistor (chip) | 4.7K 63M J | チップ抵抗 | | | 01 |
| R0700 | **RD356330** | Carbon Resistor (chip) | 3.3K 63M J | チップ抵抗 | | | 01 |
| R0701 | **RD357330** | Carbon Resistor (chip) | 33.0K 63M J | チップ抵抗 | | | 01 |
| RY200 | **V7358200** | Relay | DC FBR12WD12 12V | リレー 12V | | | 04 |
| RY640 | **V7358200** | Relay | DC FBR12WD12 12V | リレー 12V | | | 04 |
| TR700 | **VV556400** | Transistor | 2SC2412K Q,R,S | トランジスタ | | | 01 |
| | | | | | | | |
| * | **WA182500** | Circuit Board | DJK | DJKシート | (WA18240)(X3632C0) | | |
| * | **WA182600** | Circuit Board | PEDAL(DJK) | PEDALシート | (WA18240)(X3632C0) | | |
| J | -- | Jumper Wire | 0.55 | ジャンパー線 | (VA07890) | | |
| C0011 | **US064100** | Ceramic Capacitor-B (chip) | 0.0100 50V K | チップセラ（B） | | | 01 |
| C0020 | **US064100** | Ceramic Capacitor-B (chip) | 0.0100 50V K | チップセラ（B） | | | 01 |
| C0021 | **US064100** | Ceramic Capacitor-B (chip) | 0.0100 50V K | チップセラ（B） | | | 01 |
| C0050 | **US064100** | Ceramic Capacitor-B (chip) | 0.0100 50V K | チップセラ（B） | | | 01 |
| C0051 | **RD358100** | Carbon Resistor (chip) | 100.0K 63M J | チップ抵抗 | | | 01 |
| C0080 | **US064100** | Ceramic Capacitor-B (chip) | 0.0100 50V K | チップセラ（B） | | | 01 |
| C0100 | **US063100** | Ceramic Capacitor-B (chip) | 1000P 50V K | チップセラ（B） | | | 01 |
| C0101 | **US061220** | Ceramic Capacitor-CH(chip) | 22P 50V J | チップセラ（CH） | | | 01 |
| C0102 | **US061220** | Ceramic Capacitor-CH(chip) | 22P 50V J | チップセラ（CH） | | | 01 |
| C0103 | **US064100** | Ceramic Capacitor-B (chip) | 0.0100 50V K | チップセラ（B） | | | 01 |
| C0104 | **US064100** | Ceramic Capacitor-B (chip) | 0.0100 50V K | チップセラ（B） | | | 01 |
| C0105 | **UR837100** | Electrolytic Cap. | 10.00 16.0V | ケミコン | | | 01 |
| C0106 | **US064100** | Ceramic Capacitor-B (chip) | 0.0100 50V K | チップセラ（B） | | | 01 |
| C0107 | **US135100** | Ceramic Capacitor-F (chip) | 0.1000 16V Z | チップセラ（F） | | | 01 |
| CN001 | **VB390600** | Connector Base Post | PH 10P TE | コネクタベースポスト | | | 01 |

*: New Parts

RANK: Japan only

| REF NO. | PART NO. | DESCRIPTION | | 部品名 | REMARKS | QTY | RANK |
|---|---|---|---|---|---|---|---|
| CN010 | **VB390100** | Connector Base Post | PH 5P TE | コネクタベースポスト | | | 01 |
| CN050 | **V6802600** | USB Jack | USB 4P SE | USBジャック | USB | | 02 |
| D0020 | **VB493900** | Diode | MA221 | ダイオード | ⎫ | | 01 |
| D0020 | **VV925900** | Diode | RLS-73 TE-11 | ダイオード | ⎭ | | 01 |
| DA050 | **V9424900** | Diode Array | 1SS372 TE85L | ダイオードアレイ | | | 01 |
| DA051 | **V9424900** | Diode Array | 1SS372 TE85L | ダイオードアレイ | | | 01 |
| IC020 | **VD473200** | Photo Coupler | 6N137 | フォトカプラ | | | 05 |
| IC080 | **XW110A00** | IC | SN74HC157NSR | IC | MULTIPLEXER | | 02 |
| IC100 | **X3646100** | IC | M38K07M4L-300FP | IC | CPU(USB) | | |
| JK010 | **V4874800** | DIN Connector | DIN 6P MD-S613 | 複合コネクタ | to Pedal assembly | | 02 |
| JK020 | **VT202500** | DIN Connector | 5P YKF51-50 | DINコネクタ | MIDI IN | | 01 |
| JK030 | **VT202500** | DIN Connector | 5P YKF51-50 | DINコネクタ | MIDI OUT | | 01 |
| JK040 | **VT202500** | DIN Connector | 5P YKF51-50 | DINコネクタ | MIDI THRU | | 01 |
| JK060 | **VS115400** | Phone Jack Black | LGR4609-7000 | ホーンコネクタ（黒） | AUX PEDAL | | 01 |
| L0010 | **VY657200** | Chip Inductance | BK1608HM601 | チップインダクタ | | | 01 |
| -0013 | **VY657200** | Chip Inductance | BK1608HM601 | チップインダクタ | | | 01 |
| L0020 | **VY657200** | Chip Inductance | BK1608HM601 | チップインダクタ | | | 01 |
| L0021 | **VY657200** | Chip Inductance | BK1608HM601 | チップインダクタ | | | 01 |
| L0030 | **VY657200** | Chip Inductance | BK1608HM601 | チップインダクタ | | | 01 |
| L0031 | **VY657200** | Chip Inductance | BK1608HM601 | チップインダクタ | | | 01 |
| L0040 | **VY657200** | Chip Inductance | BK1608HM601 | チップインダクタ | | | 01 |
| L0041 | **VY657200** | Chip Inductance | BK1608HM601 | チップインダクタ | | | 01 |
| L0050 | **V8901200** | Chip Solid Inductance | BLM21PG221SN1D | チップソリッドインダクタ | | | 01 |
| L0051 | **RD250000** | Carbon Resistor (chip) | 0.0 0.0 J | チップ抵抗 | | | 01 |
| -0053 | **RD250000** | Carbon Resistor (chip) | 0.0 0.0 J | チップ抵抗 | | | 01 |
| L0060 | **VY657200** | Chip Inductance | BK1608HM601 | チップインダクタ | | | 01 |
| L0061 | **VY657200** | Chip Inductance | BK1608HM601 | チップインダクタ | | | 01 |
| R0020 | **RD356100** | Carbon Resistor (chip) | 1.0K 63M J | チップ抵抗 | | | 01 |
| R0021 | **RD355220** | Carbon Resistor (chip) | 220.0 63M J | チップ抵抗 | | | 01 |
| R0030 | **RD357220** | Carbon Resistor (chip) | 22.0K 63M J | チップ抵抗 | | | 01 |
| R0031 | **RD357220** | Carbon Resistor (chip) | 22.0K 63M J | チップ抵抗 | | | 01 |
| R0032 | **RD356150** | Carbon Resistor (chip) | 1.5K 63M J | チップ抵抗 | | | 01 |
| R0033 | **RD154470** | Carbon Resistor (chip) | 47.0 1/4 J | チップ抵抗 | | | 01 |
| R0034 | **RD354470** | Carbon Resistor (chip) | 47.0 63M J | チップ抵抗 | | | 01 |
| R0040 | **RD357100** | Carbon Resistor (chip) | 10.0K 63M J | チップ抵抗 | | | 01 |
| R0041 | **RD357220** | Carbon Resistor (chip) | 22.0K 63M J | チップ抵抗 | | | 01 |
| R0042 | **RD356150** | Carbon Resistor (chip) | 1.5K 63M J | チップ抵抗 | | | 01 |
| R0043 | **RD154470** | Carbon Resistor (chip) | 47.0 1/4 J | チップ抵抗 | | | 01 |
| R0044 | **RD354470** | Carbon Resistor (chip) | 47.0 63M J | チップ抵抗 | | | 01 |
| R0050 | **RD354270** | Carbon Resistor (chip) | 27.0 63M J | チップ抵抗 | | | 01 |
| R0051 | **RD354270** | Carbon Resistor (chip) | 27.0 63M J | チップ抵抗 | | | 01 |
| R0052 | **RD356150** | Carbon Resistor (chip) | 1.5K 63M J | チップ抵抗 | | | 01 |
| R0060 | **RD355220** | Carbon Resistor (chip) | 220.0 63M J | チップ抵抗 | | | 01 |
| R0061 | **RD357100** | Carbon Resistor (chip) | 10.0K 63M J | チップ抵抗 | | | 01 |
| R0062 | **RD356100** | Carbon Resistor (chip) | 1.0K 63M J | チップ抵抗 | | | 01 |
| R0070 | **RD356220** | Carbon Resistor (chip) | 2.2K 63M J | チップ抵抗 | | | 01 |
| R0071 | **RD356270** | Carbon Resistor (chip) | 2.7K 63M J | チップ抵抗 | | | 01 |
| R0072 | **RD357470** | Carbon Resistor (chip) | 47.0K 63M J | チップ抵抗 | | | 01 |
| R0073 | **RD357100** | Carbon Resistor (chip) | 10.0K 63M J | チップ抵抗 | | | 01 |
| R0074 | **RD357470** | Carbon Resistor (chip) | 47.0K 63M J | チップ抵抗 | | | 01 |
| R0075 | **RD356100** | Carbon Resistor (chip) | 1.0K 63M J | チップ抵抗 | | | 01 |
| R0080 | **RD357470** | Carbon Resistor (chip) | 47.0K 63M J | チップ抵抗 | | | 01 |
| R0081 | **RD354680** | Carbon Resistor (chip) | 68.0 63M J | チップ抵抗 | | | 01 |
| R0082 | **RD357470** | Carbon Resistor (chip) | 47.0K 63M J | チップ抵抗 | | | 01 |
| R0083 | **RD354680** | Carbon Resistor (chip) | 68.0 63M J | チップ抵抗 | | | 01 |
| R0084 | **RD354680** | Carbon Resistor (chip) | 68.0 63M J | チップ抵抗 | | | 01 |
| R0100 | **RD356100** | Carbon Resistor (chip) | 1.0K 63M J | チップ抵抗 | | | 01 |
| R0101 | **RD357100** | Carbon Resistor (chip) | 10.0K 63M J | チップ抵抗 | | | 01 |
| R0102 | **RD354680** | Carbon Resistor (chip) | 68.0 63M J | チップ抵抗 | | | 01 |
| R0103 | **RD354680** | Carbon Resistor (chip) | 68.0 63M J | チップ抵抗 | | | 01 |
| R0106 | **RD357470** | Carbon Resistor (chip) | 47.0K 63M J | チップ抵抗 | | | 01 |
| R0108 | **RD357470** | Carbon Resistor (chip) | 47.0K 63M J | チップ抵抗 | | | 01 |
| TR030 | **VV556400** | Transistor | 2SC2412K Q,R,S | トランジスタ | | | 01 |
| TR031 | **VV556400** | Transistor | 2SC2412K Q,R,S | トランジスタ | | | 01 |
| TR040 | **VV556400** | Transistor | 2SC2412K Q,R,S | トランジスタ | | | 01 |
| TR041 | **VV556400** | Transistor | 2SC2412K Q,R,S | トランジスタ | | | 01 |
| TR070 | **VV556400** | Transistor | 2SC2412K Q,R,S | トランジスタ | | | 01 |
| TR071 | **VJ927200** | Transistor | 2SA1162 O,Y | トランジスタ | | | 01 |
| * X0001 | **WB215800** | Quartz Crystal Unit | 6.000MHzAI060005BE | 水晶振動子 | | | |

*: New Parts

RANK: Japan only

| | REF NO. | PART NO. | DESCRIPTION | | 部品名 | REMARKS | QTY | RANK |
|---|---|---|---|---|---|---|---|---|
| * | | **WA454800** | Circuit Board | DM | **DMシート** | (X3789B0) | | |
| | C0001 | **UF038100** | Electrolytic Cap. (chip) | 100 16V | **チップケミコン** | | | 01 |
| | C0002 | **US064100** | Ceramic Capacitor-B (chip) | 0.0100 50V K | **チップセラ（B）** | | | 01 |
| | C0003 | **UF118330** | Electrolytic Cap. (chip) | 330 6.3V UUR0J3 | **チップケミコン** | | | 01 |
| | C0004 | **US062100** | Ceramic Capacitor-SL(chip) | 100P 50V J | **チップセラ（SL）** | | | 01 |
| | C0005 | **US062100** | Ceramic Capacitor-SL(chip) | 100P 50V J | **チップセラ（SL）** | | | 01 |
| | C0006 | **US064100** | Ceramic Capacitor-B (chip) | 0.0100 50V K | **チップセラ（B）** | | | 01 |
| | C0007 | **US062100** | Ceramic Capacitor-SL(chip) | 100P 50V J | **チップセラ（SL）** | | | 01 |
| | C0008 | **US064100** | Ceramic Capacitor-B (chip) | 0.0100 50V K | **チップセラ（B）** | | | 01 |
| | C0009 | **US062100** | Ceramic Capacitor-SL(chip) | 100P 50V J | **チップセラ（SL）** | | | 01 |
| | C0010 | **US064100** | Ceramic Capacitor-B (chip) | 0.0100 50V K | **チップセラ（B）** | | | 01 |
| | C0011 | **US062100** | Ceramic Capacitor-SL(chip) | 100P 50V J | **チップセラ（SL）** | | | 01 |
| | -0022 | **US062100** | Ceramic Capacitor-SL(chip) | 100P 50V J | **チップセラ（SL）** | | | 01 |
| | C0023 | **US064100** | Ceramic Capacitor-B (chip) | 0.0100 50V K | **チップセラ（B）** | | | 01 |
| | C0024 | **US062100** | Ceramic Capacitor-SL(chip) | 100P 50V J | **チップセラ（SL）** | | | 01 |
| | C0025 | **US062100** | Ceramic Capacitor-SL(chip) | 100P 50V J | **チップセラ（SL）** | | | 01 |
| | C0026 | **UF066100** | Electrolytic Cap. (chip) | 1 50V | **チップケミコン** | | | 01 |
| | C0027 | **US064100** | Ceramic Capacitor-B (chip) | 0.0100 50V K | **チップセラ（B）** | | | 01 |
| | -0030 | **US064100** | Ceramic Capacitor-B (chip) | 0.0100 50V K | **チップセラ（B）** | | | 01 |
| | C0031 | **UF028100** | Electrolytic Cap. (chip) | 100 10V | **チップケミコン** | | | 01 |
| | C0032 | **US064100** | Ceramic Capacitor-B (chip) | 0.0100 50V K | **チップセラ（B）** | | | 01 |
| | C0033 | **US062100** | Ceramic Capacitor-SL(chip) | 100P 50V J | **チップセラ（SL）** | | | 01 |
| | C0034 | **US062100** | Ceramic Capacitor-SL(chip) | 100P 50V J | **チップセラ（SL）** | | | 01 |
| | C0035 | **US064100** | Ceramic Capacitor-B (chip) | 0.0100 50V K | **チップセラ（B）** | | | 01 |
| | C0036 | **US064100** | Ceramic Capacitor-B (chip) | 0.0100 50V K | **チップセラ（B）** | | | 01 |
| | C0037 | **UF037100** | Electrolytic Cap. (chip) | 10 16V | **チップケミコン** | | | 01 |
| | C0038 | **US064100** | Ceramic Capacitor-B (chip) | 0.0100 50V K | **チップセラ（B）** | | | 01 |
| | C0040 | **UF047100** | Electrolytic Cap. (chip) | 10 25V | **チップケミコン** | | | 01 |
| | C0041 | **US064100** | Ceramic Capacitor-B (chip) | 0.0100 50V K | **チップセラ（B）** | | | 01 |
| | C0042 | **UF057100** | Electrolytic Cap. (chip) | 10 35V | **チップケミコン** | | | 01 |
| | C0043 | **US064100** | Ceramic Capacitor-B (chip) | 0.0100 50V K | **チップセラ（B）** | | | 01 |
| | C0044 | **UF018100** | Electrolytic Cap. (chip) | 100 6.3V | **チップケミコン** | | | 01 |
| | C0045 | **US061220** | Ceramic Capacitor-CH(chip) | 22P 50V J | **チップセラ（CH）** | | | 01 |
| | C0046 | **US064100** | Ceramic Capacitor-B (chip) | 0.0100 50V K | **チップセラ（B）** | | | 01 |
| | C0047 | **US061220** | Ceramic Capacitor-CH(chip) | 22P 50V J | **チップセラ（CH）** | | | 01 |
| | C0048 | **US062470** | Ceramic Capacitor-SL(chip) | 470P 50V J | **チップセラ（SL）** | | | 01 |
| | C0049 | **US062470** | Ceramic Capacitor-SL(chip) | 470P 50V J | **チップセラ（SL）** | | | 01 |
| | C0050 | **US063100** | Ceramic Capacitor-B (chip) | 1000P 50V K | **チップセラ（B）** | | | 01 |
| | C0052 | **UF037100** | Electrolytic Cap. (chip) | 10 16V | **チップケミコン** | | | 01 |
| | C0053 | **US064100** | Ceramic Capacitor-B (chip) | 0.0100 50V K | **チップセラ（B）** | | | 01 |
| | -0056 | **US064100** | Ceramic Capacitor-B (chip) | 0.0100 50V K | **チップセラ（B）** | | | 01 |
| | C0057 | **US135100** | Ceramic Capacitor-F (chip) | 0.1000 16V Z | **チップセラ（F）** | | | 01 |
| | C0058 | **US064100** | Ceramic Capacitor-B (chip) | 0.0100 50V K | **チップセラ（B）** | | | 01 |
| | -0062 | **US064100** | Ceramic Capacitor-B (chip) | 0.0100 50V K | **チップセラ（B）** | | | 01 |
| | C0064 | **US064100** | Ceramic Capacitor-B (chip) | 0.0100 50V K | **チップセラ（B）** | | | 01 |
| | C0065 | **US064100** | Ceramic Capacitor-B (chip) | 0.0100 50V K | **チップセラ（B）** | | | 01 |
| | C0066 | **US135100** | Ceramic Capacitor-F (chip) | 0.1000 16V Z | **チップセラ（F）** | | | 01 |
| | C0067 | **US064100** | Ceramic Capacitor-B (chip) | 0.0100 50V K | **チップセラ（B）** | | | 01 |
| | C0068 | **US064100** | Ceramic Capacitor-B (chip) | 0.0100 50V K | **チップセラ（B）** | | | 01 |
| | C0069 | **US135100** | Ceramic Capacitor-F (chip) | 0.1000 16V Z | **チップセラ（F）** | | | 01 |
| | C0070 | **UF118220** | Electrolytic Cap. (chip) | 220 6.3V UUR0J2 | **チップケミコン** | | | 01 |
| | C0071 | **US135100** | Ceramic Capacitor-F (chip) | 0.1000 16V Z | **チップセラ（F）** | | | 01 |
| | C0072 | **US061470** | Ceramic Capacitor-CH(chip) | 47P 50V J | **チップセラ（CH）** | | | 01 |
| | -0074 | **US061470** | Ceramic Capacitor-CH(chip) | 47P 50V J | **チップセラ（CH）** | | | 01 |
| | C0075 | **US135100** | Ceramic Capacitor-F (chip) | 0.1000 16V Z | **チップセラ（F）** | | | 01 |
| | C0077 | **UF118220** | Electrolytic Cap. (chip) | 220 6.3V UUR0J2 | **チップケミコン** | | | 01 |
| | C0078 | **US135100** | Ceramic Capacitor-F (chip) | 0.1000 16V Z | **チップセラ（F）** | | | 01 |
| | C0079 | **US064100** | Ceramic Capacitor-B (chip) | 0.0100 50V K | **チップセラ（B）** | | | 01 |
| | C0080 | **US064100** | Ceramic Capacitor-B (chip) | 0.0100 50V K | **チップセラ（B）** | | | 01 |
| | C0081 | **US135100** | Ceramic Capacitor-F (chip) | 0.1000 16V Z | **チップセラ（F）** | | | 01 |
| | C0082 | **US145100** | Ceramic Capacitor-F (chip) | 0.1000 25V Z | **チップセラ（F）** | | | 01 |
| | C0083 | **UF118470** | Electrolytic Cap. (chip) | 470 6.3V UUR0J4 | **チップケミコン** | | | 01 |
| | C0084 | **US064100** | Ceramic Capacitor-B (chip) | 0.0100 50V K | **チップセラ（B）** | | | 01 |
| | C0085 | **US063100** | Ceramic Capacitor-B (chip) | 1000P 50V K | **チップセラ（B）** | | | 01 |
| | C0086 | **US061680** | Ceramic Capacitor-SL(chip) | 68P 50V J | **チップセラ（SL）** | | | 01 |
| | C0087 | **US060500** | Ceramic Capacitor-CH(chip) | 5P 50V C | **チップセラ（CH）** | | | 01 |
| | C0088 | **US135100** | Ceramic Capacitor-F (chip) | 0.1000 16V Z | **チップセラ（F）** | | | 01 |
| | C0089 | **US064100** | Ceramic Capacitor-B (chip) | 0.0100 50V K | **チップセラ（B）** | | | 01 |
| | C0091 | **UF037220** | Electrolytic Cap. (chip) | 22 16V | **チップケミコン** | | | 01 |
| | C0092 | **UF118220** | Electrolytic Cap. (chip) | 220 6.3V UUR0J2 | **チップケミコン** | | | 01 |

*: New Parts

RANK: Japan only

| REF NO. | PART NO. | DESCRIPTION | | 部品名 | REMARKS | QTY | RANK |
|---|---|---|---|---|---|---|---|
| C0093 | **US061470** | Ceramic Capacitor-CH(chip) | 47P 50V J | チップセラ（ＣＨ） | | | 01 |
| C0094 | **US135100** | Ceramic Capacitor-F (chip) | 0.1000 16V Z | チップセラ（Ｆ） | | | 01 |
| C0096 | **US135100** | Ceramic Capacitor-F (chip) | 0.1000 16V Z | チップセラ（Ｆ） | | | 01 |
| C0097 | **US064100** | Ceramic Capacitor-B (chip) | 0.0100 50V K | チップセラ（Ｂ） | | | 01 |
| -0099 | **US064100** | Ceramic Capacitor-B (chip) | 0.0100 50V K | チップセラ（Ｂ） | | | 01 |
| C0100 | **UF037100** | Electrolytic Cap. (chip) | 10 16V | チップケミコン | | | 01 |
| C0102 | **US064100** | Ceramic Capacitor-B (chip) | 0.0100 50V K | チップセラ（Ｂ） | | | 01 |
| -0105 | **US064100** | Ceramic Capacitor-B (chip) | 0.0100 50V K | チップセラ（Ｂ） | | | 01 |
| C0106 | **UF038100** | Electrolytic Cap. (chip) | 100 16V | チップケミコン | | | 01 |
| C0108 | **UF037100** | Electrolytic Cap. (chip) | 10 16V | チップケミコン | | | 01 |
| C0109 | **US064100** | Ceramic Capacitor-B (chip) | 0.0100 50V K | チップセラ（Ｂ） | | | 01 |
| C0111 | **US064100** | Ceramic Capacitor-B (chip) | 0.0100 50V K | チップセラ（Ｂ） | | | 01 |
| -0119 | **US064100** | Ceramic Capacitor-B (chip) | 0.0100 50V K | チップセラ（Ｂ） | | | 01 |
| C0120 | **UF038100** | Electrolytic Cap. (chip) | 100 16V | チップケミコン | | | 01 |
| C0121 | **US064100** | Ceramic Capacitor-B (chip) | 0.0100 50V K | チップセラ（Ｂ） | | | 01 |
| C0122 | **US064100** | Ceramic Capacitor-B (chip) | 0.0100 50V K | チップセラ（Ｂ） | | | 01 |
| C0123 | **UF037100** | Electrolytic Cap. (chip) | 10 16V | チップケミコン | | | 01 |
| C0124 | **US064100** | Ceramic Capacitor-B (chip) | 0.0100 50V K | チップセラ（Ｂ） | | | 01 |
| C0125 | **US061270** | Ceramic Capacitor-CH(chip) | 27P 50V J | チップセラ（ＣＨ） | | | 01 |
| C0126 | **US064100** | Ceramic Capacitor-B (chip) | 0.0100 50V K | チップセラ（Ｂ） | | | 01 |
| -0129 | **US064100** | Ceramic Capacitor-B (chip) | 0.0100 50V K | チップセラ（Ｂ） | | | 01 |
| C0130 | **US061180** | Ceramic Capacitor-CH(chip) | 18P 50V J | チップセラ（ＣＨ） | | | 01 |
| -0133 | **US061180** | Ceramic Capacitor-CH(chip) | 18P 50V J | チップセラ（ＣＨ） | | | 01 |
| C0134 | **US064100** | Ceramic Capacitor-B (chip) | 0.0100 50V K | チップセラ（Ｂ） | | | 01 |
| C0135 | **US062100** | Ceramic Capacitor-SL(chip) | 100P 50V J | チップセラ（ＳＬ） | | | 01 |
| -0137 | **US062100** | Ceramic Capacitor-SL(chip) | 100P 50V J | チップセラ（ＳＬ） | | | 01 |
| C0138 | **US064100** | Ceramic Capacitor-B (chip) | 0.0100 50V K | チップセラ（Ｂ） | | | 01 |
| -0140 | **US064100** | Ceramic Capacitor-B (chip) | 0.0100 50V K | チップセラ（Ｂ） | | | 01 |
| C0141 | **US062100** | Ceramic Capacitor-SL(chip) | 100P 50V J | チップセラ（ＳＬ） | | | 01 |
| C0142 | **US064100** | Ceramic Capacitor-B (chip) | 0.0100 50V K | チップセラ（Ｂ） | | | 01 |
| C0143 | **UF148100** | Electrolytic Cap. (chip) | 100 25V UUR1E1 | チップケミコン | | | 01 |
| C0144 | **UF037100** | Electrolytic Cap. (chip) | 10 16V | チップケミコン | | | 01 |
| C0145 | **US064100** | Ceramic Capacitor-B (chip) | 0.0100 50V K | チップセラ（Ｂ） | | | 01 |
| C0146 | **US064100** | Ceramic Capacitor-B (chip) | 0.0100 50V K | チップセラ（Ｂ） | | | 01 |
| C0147 | **US135100** | Ceramic Capacitor-F (chip) | 0.1000 16V Z | チップセラ（Ｆ） | | | 01 |
| C0148 | **US135100** | Ceramic Capacitor-F (chip) | 0.1000 16V Z | チップセラ（Ｆ） | | | 01 |
| C0149 | **US063220** | Ceramic Capacitor-B (chip) | 2200P 50V K | チップセラ（Ｂ） | | | 01 |
| C0150 | **US064100** | Ceramic Capacitor-B (chip) | 0.0100 50V K | チップセラ（Ｂ） | | | 01 |
| C0151 | **UF037100** | Electrolytic Cap. (chip) | 10 16V | チップケミコン | | | 01 |
| C0152 | **US135100** | Ceramic Capacitor-F (chip) | 0.1000 16V Z | チップセラ（Ｆ） | | | 01 |
| C0153 | **US064100** | Ceramic Capacitor-B (chip) | 0.0100 50V K | チップセラ（Ｂ） | | | 01 |
| C0154 | **UF037220** | Electrolytic Cap. (chip) | 22 16V | チップケミコン | | | 01 |
| C0155 | **UF037100** | Electrolytic Cap. (chip) | 10 16V | チップケミコン | | | 01 |
| C0156 | **US064100** | Ceramic Capacitor-B (chip) | 0.0100 50V K | チップセラ（Ｂ） | | | 01 |
| C0157 | **UF037100** | Electrolytic Cap. (chip) | 10 16V | チップケミコン | | | 01 |
| C0158 | **US135100** | Ceramic Capacitor-F (chip) | 0.1000 16V Z | チップセラ（Ｆ） | | | 01 |
| C0159 | **US064100** | Ceramic Capacitor-B (chip) | 0.0100 50V K | チップセラ（Ｂ） | | | 01 |
| C0160 | **US064100** | Ceramic Capacitor-B (chip) | 0.0100 50V K | チップセラ（Ｂ） | | | 01 |
| C0161 | **UF046470** | Electrolytic Cap. (chip) | 4.7 25V | チップケミコン | | | 01 |
| -0164 | **UF046470** | Electrolytic Cap. (chip) | 4.7 25V | チップケミコン | | | 01 |
| C0165 | **US061270** | Ceramic Capacitor-CH(chip) | 27P 50V J | チップセラ（ＣＨ） | | | 01 |
| C0166 | **US061270** | Ceramic Capacitor-CH(chip) | 27P 50V J | チップセラ（ＣＨ） | | | 01 |
| C0167 | **US064100** | Ceramic Capacitor-B (chip) | 0.0100 50V K | チップセラ（Ｂ） | | | 01 |
| C0168 | **UF037100** | Electrolytic Cap. (chip) | 10 16V | チップケミコン | | | 01 |
| C0169 | **US135100** | Ceramic Capacitor-F (chip) | 0.1000 16V Z | チップセラ（Ｆ） | | | 01 |
| C0170 | **US135100** | Ceramic Capacitor-F (chip) | 0.1000 16V Z | チップセラ（Ｆ） | | | 01 |
| C0171 | **US062330** | Ceramic Capacitor-SL(chip) | 330P 50V J | チップセラ（ＳＬ） | | | 01 |
| C0172 | **US062330** | Ceramic Capacitor-SL(chip) | 330P 50V J | チップセラ（ＳＬ） | | | 01 |
| C0173 | **US064100** | Ceramic Capacitor-B (chip) | 0.0100 50V K | チップセラ（Ｂ） | | | 01 |
| C0174 | **US064100** | Ceramic Capacitor-B (chip) | 0.0100 50V K | チップセラ（Ｂ） | | | 01 |
| C0175 | **US063100** | Ceramic Capacitor-B (chip) | 1000P 50V K | チップセラ（Ｂ） | | | 01 |
| C0176 | **US062220** | Ceramic Capacitor-SL(chip) | 220P 50V J | チップセラ（ＳＬ） | | | 01 |
| -0179 | **US062220** | Ceramic Capacitor-SL(chip) | 220P 50V J | チップセラ（ＳＬ） | | | 01 |
| C0180 | **US135100** | Ceramic Capacitor-F (chip) | 0.1000 16V Z | チップセラ（Ｆ） | | | 01 |
| C0181 | **UF037100** | Electrolytic Cap. (chip) | 10 16V | チップケミコン | | | 01 |
| C0182 | **UF037220** | Electrolytic Cap. (chip) | 22 16V | チップケミコン | | | 01 |
| C0183 | **UF037220** | Electrolytic Cap. (chip) | 22 16V | チップケミコン | | | 01 |
| C0184 | **US135100** | Ceramic Capacitor-F (chip) | 0.1000 16V Z | チップセラ（Ｆ） | | | 01 |
| C0185 | **US062150** | Ceramic Capacitor-SL(chip) | 150P 50V J | チップセラ（ＳＬ） | | | 01 |
| C0186 | **US063220** | Ceramic Capacitor-B (chip) | 2200P 50V K | チップセラ（Ｂ） | | | 01 |

∗: New Parts

RANK: Japan only

| REF NO. | PART NO. | DESCRIPTION | | 部品名 | REMARKS | QTY | RANK |
|---|---|---|---|---|---|---|---|
| C0187 | **US063220** | Ceramic Capacitor-B (chip) | 2200P 50V K | チップセラ（B） | | | 01 |
| C0188 | **UF066100** | Electrolytic Cap. (chip) | 1 50V | チップケミコン | | | 01 |
| C0189 | **UF037100** | Electrolytic Cap. (chip) | 10 16V | チップケミコン | | | 01 |
| C0190 | **US064100** | Ceramic Capacitor-B (chip) | 0.0100 50V K | チップセラ（B） | | | 01 |
| -0192 | **US064100** | Ceramic Capacitor-B (chip) | 0.0100 50V K | チップセラ（B） | | | 01 |
| C0193 | **UF066100** | Electrolytic Cap. (chip) | 1 50V | チップケミコン | | | 01 |
| C0194 | **UF037100** | Electrolytic Cap. (chip) | 10 16V | チップケミコン | | | 01 |
| C0195 | **US064100** | Ceramic Capacitor-B (chip) | 0.0100 50V K | チップセラ（B） | | | 01 |
| C0196 | **UF047100** | Electrolytic Cap. (chip) | 10 25V | チップケミコン | | | 01 |
| C0197 | **US064100** | Ceramic Capacitor-B (chip) | 0.0100 50V K | チップセラ（B） | | | 01 |
| -0200 | **US064100** | Ceramic Capacitor-B (chip) | 0.0100 50V K | チップセラ（B） | | | 01 |
| C0201 | **UF017220** | Electrolytic Cap. (chip) | 22 6.3V | チップケミコン | | | 01 |
| C0202 | **UF017220** | Electrolytic Cap. (chip) | 22 6.3V | チップケミコン | | | 01 |
| C0203 | **US064100** | Ceramic Capacitor-B (chip) | 0.0100 50V K | チップセラ（B） | | | 01 |
| -0213 | **US064100** | Ceramic Capacitor-B (chip) | 0.0100 50V K | チップセラ（B） | | | 01 |
| C0214 | **US062100** | Ceramic Capacitor-SL(chip) | 100P 50V J | チップセラ（SL） | | | 01 |
| C0215 | **UF017220** | Electrolytic Cap. (chip) | 22 6.3V | チップケミコン | | | 01 |
| C0216 | **US064100** | Ceramic Capacitor-B (chip) | 0.0100 50V K | チップセラ（B） | | | 01 |
| C0217 | **US061680** | Ceramic Capacitor-SL(chip) | 68P 50V J | チップセラ（SL） | | | 01 |
| C0218 | **US064100** | Ceramic Capacitor-B (chip) | 0.0100 50V K | チップセラ（B） | | | 01 |
| -0225 | **US064100** | Ceramic Capacitor-B (chip) | 0.0100 50V K | チップセラ（B） | | | 01 |
| C0227 | **US063100** | Ceramic Capacitor-B (chip) | 1000P 50V K | チップセラ（B） | | | 01 |
| C0228 | **US064100** | Ceramic Capacitor-B (chip) | 0.0100 50V K | チップセラ（B） | | | 01 |
| C0229 | **US064100** | Ceramic Capacitor-B (chip) | 0.0100 50V K | チップセラ（B） | | | 01 |
| C0230 | **US135100** | Ceramic Capacitor-F (chip) | 0.1000 16V Z | チップセラ（F） | | | 01 |
| C0231 | **US135100** | Ceramic Capacitor-F (chip) | 0.1000 16V Z | チップセラ（F） | | | 01 |
| C0232 | **US064100** | Ceramic Capacitor-B (chip) | 0.0100 50V K | チップセラ（B） | | | 01 |
| CN001 | **VQ391300** | Connector | 34P TE | コネクタ | | | 03 |
| CN002 | **LB918030** | Base Post Connector | XH 3P TE | ベーストツキポスト | | | 01 |
| CN003 | **VB390300** | Connector Base Post | PH 7P TE | コネクタベースポスト | | | 01 |
| CN004 | **VB390100** | Connector Base Post | PH 5P TE | コネクタベースポスト | | | 01 |
| CN005 | **VB390600** | Connector Base Post | PH 10P TE | コネクタベースポスト | | | 01 |
| CN006 | **VB390400** | Connector Base Post | PH 8P TE | コネクタベースポスト | | | 01 |
| CN007 | **VV878100** | Connector Base Post | DF13-14P-1.25DSA | コネクタベースポスト | | | 04 |
| CN008 | **VB389800** | Connector Base Post | PH 2P TE | コネクタベースポスト | | | 01 |
| CN009 | **VB390700** | Connector Base Post | PH 11P TE | コネクタベースポスト | | | 01 |
| CN010 | **VM673300** | Header | HIF3FC26PA-2.54DSA | ヘッダー | | | 03 |
| CN011 | **VB390100** | Connector Base Post | PH 5P TE | コネクタベースポスト | | | 01 |
| CN012 | **VB390800** | Connector Base Post | PH 12P TE | コネクタベースポスト | | | 01 |
| D0002 | **VB493900** | Diode | MA221 | ダイオード | | | 01 |
| D0004 | **VB493900** | Diode | MA221 | ダイオード | | | 01 |
| -0007 | **VB493900** | Diode | MA221 | ダイオード | | | 01 |
| D0008 | **VV925900** | Diode | RLS-73 TE-11 | ダイオード | | | 01 |
| D0009 | **VB493900** | Diode | MA221 | ダイオード | | | 01 |
| D0010 | **VB493900** | Diode | MA221 | ダイオード | | | 01 |
| IC001 | **XT744A00** | IC | TC74VHCT245AFT | IC | BUFFER | | 07 |
| IC002 | **IS000800** | IC | HD74LV08AFPEL | IC | AND | | 01 |
| IC003 | **XR115A00** | IC | UPD43256BGU-70L | IC | SRAM 256K | | 08 |
| IC003 | **XT090A00** | IC | S1M2U200M0L700B | IC | | | 07 |
| IC003 | **XV411A00** | IC | W24258S-70LE-EL10 | IC | | | 07 |
| IC003 | **XW433A00** | IC | CY62256LL-70SNCT | IC | | | 05 |
| IC003 | **XZ388A00** | IC | W24257S-70LL-EL10 | IC | | | 05 |
| IC004 | **X0158A00** | IC | SN74AHCT1G08DCKR | IC | CLOCK | | 01 |
| IC005 | **XS516A00** | IC | UPC2933T-E1 | IC | REGULATOR +3.3V | | 03 |
| IC007 | **XE054A00** | IC | TC4069UBF-EL | IC | INVERTER | | 01 |
| IC008 | **XQ595A00** | IC | S1D13305F00B100 | IC | LCDC | | 08 |
| IC009 | **XI939A00** | IC | HD63266F | IC | FDC | | 09 |
| IC011 | **XZ286A00** | IC | 74LVC245APW | IC | BUFFER | | 02 |
| IC012 | **XZ286A00** | IC | 74LVC245APW | IC | BUFFER | | 02 |
| * IC013 | **X3833A00** | IC | SN74AHC1G08DCKR | IC | CLOCK | | |
| IC014 | **XN431A00** | IC | CXA1645M-T6 | IC | RGB ENCODER | | 06 |
| IC018 | **XV250B00** | IC | HD6417709F80B | IC | CPU | | 11 |
| IC019 | **XV481B00** | IC | JG760082A | IC | VOGA(GATE ARRAY) | | 07 |
| IC021 | **XS048A00** | IC | HD74LVC139FPEL | IC | DECODER | | 03 |
| IC022 | **XY099A00** | IC | K4S643232C-TC80000 | IC | SDRAM 64M | | 15 |
| IC022 | **X0176A00** | IC | W986432DH-7 | IC | | | 15 |
| IC022 | **X0493A00** | IC | K4S643232E-TC60000 | IC | | | 09 |
| IC022 | **X0494A00** | IC | K4S643232E-TC70000 | IC | | | 15 |
| IC023 | **XT138A00** | IC | UPD431000AGW-70LL | IC | SRAM 1M | | 07 |
| IC026 | **XV833A00** | IC | MBCG46183-129PFV-G | IC | SIO4(GATE ARRAY) | | 06 |

*: New Parts

RANK: Japan only

| | REF NO. | PART NO. | DESCRIPTION | | 部品名 | REMARKS | QTY | RANK |
|---|---|---|---|---|---|---|---|---|
| | IC027 | **XY782A00** | IC | AD1854JRSRL | IC | DAC | | 05 |
| | IC028 | **XW792A00** | IC | SN74HC132NSR | IC | NAND | | 02 |
| | IC028 | **XY352A00** | IC | MM74HC132SJX | IC | | | 02 |
| * | IC029 | **X3772100** | IC | MR27V6402G | IC | P2ROM 64M PARA/STYLE | | |
| | IC030 | **XV510A00** | IC | AK5351-VF-E2 | IC | ADC | | 08 |
| | IC031 | **XF291A00** | IC | UPC4570G2 | IC | OP AMP | | 03 |
| | IC032 | **XF291A00** | IC | UPC4570G2 | IC | OP AMP | | 03 |
| | IC033 | **XZ216A00** | IC | MBM29LV160BE90TN-K | IC | FLASH ROM 16M | | 12 |
| | IC033 | **XZ610A00** | IC | MBM29LV160BE-70TN | IC | | | 12 |
| | IC034 | **XJ598A00** | IC | NJM78L05UA | IC | REGULATOR +5V | | 02 |
| | IC035 | **XU462A00** | IC | MSM514260C-60TS-K | IC | DRAM 4M | | 08 |
| | IC035 | **XU462B00** | IC | MSM514260E-60TS-K | IC | | | 07 |
| | IC035 | **XW732A00** | IC | S1N42T6026S000B | IC | | | 07 |
| | IC035 | **X3378A00** | IC | IC41C16257-35T | IC | | | 06 |
| | IC036 | **XU947C00** | IC | HG73C205AFD | IC | SWX00B | | 09 |
| | IC038 | **X0033100** | IC | | IC | MASK ROM 128M WAVE | | 15 |
| | IC039 | **X0158A00** | IC | SN74AHCT1G08DCKR | IC | CLOCK | | 01 |
| * | IC040 | **X3770100** | IC | MX23L6410 MAIN-L | IC | MASK ROM 64M MAIN-L | | |
| * | IC041 | **X3771100** | IC | MX23L6410 MAIN-H | IC | MASK ROM 64M MAIN-H | | |
| | IC044 | **X0506A00** | IC | M5233FP-600D | IC | COMPARATOR | | 02 |
| | IC045 | **XW792A00** | IC | SN74HC132NSR | IC | NAND | | 02 |
| | IC046 | **X0158A00** | IC | SN74AHCT1G08DCKR | IC | CLOCK | | 01 |
| | L0001 | **VY657200** | Chip Inductance | 600 BK1608HM601 | チップインダクタ | | | 01 |
| | -0012 | **VY657200** | Chip Inductance | 600 BK1608HM601 | チップインダクタ | | | 01 |
| | L0013 | **VR243700** | Chip Inductance | 56U LEM2520 T 560J | 巻線チップインダクタ | | | 01 |
| | -0015 | **VR243700** | Chip Inductance | 56U LEM2520 T 560J | 巻線チップインダクタ | | | 01 |
| | L0016 | **VD473700** | Coil | SBT-0460TF 60uH | コイル 60uH | | | 02 |
| | -0020 | **VD473700** | Coil | SBT-0460TF 60uH | コイル 60uH | | | 02 |
| | R0001 | **RD357100** | Carbon Resistor (chip) | 10.0K 63M J | チップ抵抗 | | | 01 |
| | R0003 | **RD355100** | Carbon Resistor (chip) | 100.0 63M J | チップ抵抗 | | | 01 |
| | -0005 | **RD355100** | Carbon Resistor (chip) | 100.0 63M J | チップ抵抗 | | | 01 |
| | R0008 | **RD357100** | Carbon Resistor (chip) | 10.0K 63M J | チップ抵抗 | | | 01 |
| | R0009 | **RD355100** | Carbon Resistor (chip) | 100.0 63M J | チップ抵抗 | | | 01 |
| | R0010 | **RD357100** | Carbon Resistor (chip) | 10.0K 63M J | チップ抵抗 | | | 01 |
| | R0011 | **RD355470** | Carbon Resistor (chip) | 470.0 63M J | チップ抵抗 | | | 01 |
| | -0022 | **RD355470** | Carbon Resistor (chip) | 470.0 63M J | チップ抵抗 | | | 01 |
| | R0023 | **RD354680** | Carbon Resistor (chip) | 68.0 63M J | チップ抵抗 | | | 01 |
| | R0024 | **RD355100** | Carbon Resistor (chip) | 100.0 63M J | チップ抵抗 | | | 01 |
| | R0025 | **RD354680** | Carbon Resistor (chip) | 68.0 63M J | チップ抵抗 | | | 01 |
| | R0027 | **RD355100** | Carbon Resistor (chip) | 100.0 63M J | チップ抵抗 | | | 01 |
| | -0037 | **RD355100** | Carbon Resistor (chip) | 100.0 63M J | チップ抵抗 | | | 01 |
| | R0049 | **RD355330** | Carbon Resistor (chip) | 330.0 63M J | チップ抵抗 | | | 01 |
| | R0050 | **RD357100** | Carbon Resistor (chip) | 10.0K 63M J | チップ抵抗 | | | 01 |
| | -0055 | **RD357100** | Carbon Resistor (chip) | 10.0K 63M J | チップ抵抗 | | | 01 |
| | R0057 | **RD357100** | Carbon Resistor (chip) | 10.0K 63M J | チップ抵抗 | | | 01 |
| | -0066 | **RD357100** | Carbon Resistor (chip) | 10.0K 63M J | チップ抵抗 | | | 01 |
| | R0067 | **RD354680** | Carbon Resistor (chip) | 68.0 63M J | チップ抵抗 | | | 01 |
| | R0068 | **RD357100** | Carbon Resistor (chip) | 10.0K 63M J | チップ抵抗 | | | 01 |
| | R0070 | **RD357100** | Carbon Resistor (chip) | 10.0K 63M J | チップ抵抗 | | | 01 |
| | R0072 | **RD357100** | Carbon Resistor (chip) | 10.0K 63M J | チップ抵抗 | | | 01 |
| | R0074 | **RD357100** | Carbon Resistor (chip) | 10.0K 63M J | チップ抵抗 | | | 01 |
| | R0075 | **RD357100** | Carbon Resistor (chip) | 10.0K 63M J | チップ抵抗 | | | 01 |
| | R0078 | **RD357100** | Carbon Resistor (chip) | 10.0K 63M J | チップ抵抗 | | | 01 |
| | R0080 | **RD357100** | Carbon Resistor (chip) | 10.0K 63M J | チップ抵抗 | | | 01 |
| | R0082 | **RD357100** | Carbon Resistor (chip) | 10.0K 63M J | チップ抵抗 | | | 01 |
| | R0085 | **RD357100** | Carbon Resistor (chip) | 10.0K 63M J | チップ抵抗 | | | 01 |
| | R0087 | **RD357100** | Carbon Resistor (chip) | 10.0K 63M J | チップ抵抗 | | | 01 |
| | R0088 | **RD357100** | Carbon Resistor (chip) | 10.0K 63M J | チップ抵抗 | | | 01 |
| | R0091 | **RD357100** | Carbon Resistor (chip) | 10.0K 63M J | チップ抵抗 | | | 01 |
| | R0095 | **RD357100** | Carbon Resistor (chip) | 10.0K 63M J | チップ抵抗 | | | 01 |
| | R0097 | **RD357100** | Carbon Resistor (chip) | 10.0K 63M J | チップ抵抗 | | | 01 |
| | R0100 | **RD357100** | Carbon Resistor (chip) | 10.0K 63M J | チップ抵抗 | | | 01 |
| | R0103 | **RD357100** | Carbon Resistor (chip) | 10.0K 63M J | チップ抵抗 | | | 01 |
| | R0107 | **RD354680** | Carbon Resistor (chip) | 68.0 63M J | チップ抵抗 | | | 01 |
| | R0109 | **RD354680** | Carbon Resistor (chip) | 68.0 63M J | チップ抵抗 | | | 01 |
| | R0111 | **RD354680** | Carbon Resistor (chip) | 68.0 63M J | チップ抵抗 | | | 01 |
| | R0112 | **RD354680** | Carbon Resistor (chip) | 68.0 63M J | チップ抵抗 | | | 01 |
| | R0114 | **RD354680** | Carbon Resistor (chip) | 68.0 63M J | チップ抵抗 | | | 01 |
| | R0116 | **RD354680** | Carbon Resistor (chip) | 68.0 63M J | チップ抵抗 | | | 01 |
| | R0117 | **RD357100** | Carbon Resistor (chip) | 10.0K 63M J | チップ抵抗 | | | 01 |

*: New Parts

RANK: Japan only

| REF NO. | PART NO. | DESCRIPTION | | 部品名 | REMARKS | QTY | RANK |
|---|---|---|---|---|---|---|---|
| R0123 | **RD354680** | Carbon Resistor (chip) | 68.0 63M J | チップ抵抗 | | | 01 |
| R0124 | **RD357100** | Carbon Resistor (chip) | 10.0K 63M J | チップ抵抗 | | | 01 |
| R0125 | **RD354680** | Carbon Resistor (chip) | 68.0 63M J | チップ抵抗 | | | 01 |
| R0126 | **RD357100** | Carbon Resistor (chip) | 10.0K 63M J | チップ抵抗 | | | 01 |
| R0128 | **RD357100** | Carbon Resistor (chip) | 10.0K 63M J | チップ抵抗 | | | 01 |
| R0131 | **RD355220** | Carbon Resistor (chip) | 220.0 63M J | チップ抵抗 | | | 01 |
| -0133 | **RD355220** | Carbon Resistor (chip) | 220.0 63M J | チップ抵抗 | | | 01 |
| R0140 | **RD357100** | Carbon Resistor (chip) | 10.0K 63M J | チップ抵抗 | | | 01 |
| R0142 | **RD358470** | Carbon Resistor (chip) | 470.0K 63M J | チップ抵抗 | | | 01 |
| R0144 | **RD356100** | Carbon Resistor (chip) | 1.0K 63M J | チップ抵抗 | | | 01 |
| R0147 | **RD354750** | Carbon Resistor (chip) | 75.0 63M J | チップ抵抗 | | | 01 |
| R0149 | **RD356100** | Carbon Resistor (chip) | 1.0K 63M J | チップ抵抗 | | | 01 |
| R0151 | **RD357100** | Carbon Resistor (chip) | 10.0K 63M J | チップ抵抗 | | | 01 |
| R0154 | **RD356100** | Carbon Resistor (chip) | 1.0K 63M J | チップ抵抗 | | | 01 |
| R0156 | **RD358470** | Carbon Resistor (chip) | 470.0K 63M J | チップ抵抗 | | | 01 |
| R0162 | **RD356100** | Carbon Resistor (chip) | 1.0K 63M J | チップ抵抗 | | | 01 |
| R0163 | **RD357100** | Carbon Resistor (chip) | 10.0K 63M J | チップ抵抗 | | | 01 |
| R0164 | **RD357470** | Carbon Resistor (chip) | 47.0K 63M J | チップ抵抗 | | | 01 |
| R0165 | **RD356100** | Carbon Resistor (chip) | 1.0K 63M J | チップ抵抗 | | | 01 |
| R0167 | **RD357100** | Carbon Resistor (chip) | 10.0K 63M J | チップ抵抗 | | | 01 |
| R0168 | **RD357560** | Carbon Resistor (chip) | 56.0K 63M J | チップ抵抗 | | | 01 |
| R0170 | **RD357220** | Carbon Resistor (chip) | 22.0K 63M J | チップ抵抗 | | | 01 |
| R0172 | **RD356220** | Carbon Resistor (chip) | 2.2K 63M J | チップ抵抗 | | | 01 |
| R0173 | **RD356120** | Carbon Resistor (chip) | 1.2K 63M J | チップ抵抗 | | | 01 |
| R0174 | **RD355820** | Carbon Resistor (chip) | 820.0 63M J | チップ抵抗 | | | 01 |
| R0175 | **RD356220** | Carbon Resistor (chip) | 2.2K 63M J | チップ抵抗 | | | 01 |
| -0180 | **RD356220** | Carbon Resistor (chip) | 2.2K 63M J | チップ抵抗 | | | 01 |
| R0182 | **RD357100** | Carbon Resistor (chip) | 10.0K 63M J | チップ抵抗 | | | 01 |
| R0220 | **RD357100** | Carbon Resistor (chip) | 10.0K 63M J | チップ抵抗 | | | 01 |
| -0224 | **RD357100** | Carbon Resistor (chip) | 10.0K 63M J | チップ抵抗 | | | 01 |
| R0229 | **RD354100** | Carbon Resistor (chip) | 10.0 63M J | チップ抵抗 | | | 01 |
| -0231 | **RD354100** | Carbon Resistor (chip) | 10.0 63M J | チップ抵抗 | | | 01 |
| R0232 | **RD355100** | Carbon Resistor (chip) | 100.0 63M J | チップ抵抗 | | | 01 |
| R0233 | **RD359100** | Carbon Resistor (chip) | 1.0M 63M J | チップ抵抗 | | | 01 |
| R0234 | **RD359100** | Carbon Resistor (chip) | 1.0M 63M J | チップ抵抗 | | | 01 |
| R0235 | **RD356220** | Carbon Resistor (chip) | 2.2K 63M J | チップ抵抗 | | | 01 |
| R0236 | **RD356150** | Carbon Resistor (chip) | 1.5K 63M J | チップ抵抗 | | | 01 |
| R0237 | **RD354100** | Carbon Resistor (chip) | 10.0 63M J | チップ抵抗 | | | 01 |
| R0238 | **RD357100** | Carbon Resistor (chip) | 10.0K 63M J | チップ抵抗 | | | 01 |
| -0241 | **RD357100** | Carbon Resistor (chip) | 10.0K 63M J | チップ抵抗 | | | 01 |
| R0242 | **RD355100** | Carbon Resistor (chip) | 100.0 63M J | チップ抵抗 | | | 01 |
| -0244 | **RD355100** | Carbon Resistor (chip) | 100.0 63M J | チップ抵抗 | | | 01 |
| R0245 | **RD357100** | Carbon Resistor (chip) | 10.0K 63M J | チップ抵抗 | | | 01 |
| R0246 | **RD357100** | Carbon Resistor (chip) | 10.0K 63M J | チップ抵抗 | | | 01 |
| R0248 | **RD357470** | Carbon Resistor (chip) | 47.0K 63M J | チップ抵抗 | | | 01 |
| R0249 | **RD354100** | Carbon Resistor (chip) | 10.0 63M J | チップ抵抗 | | | 01 |
| R0250 | **RD354100** | Carbon Resistor (chip) | 10.0 63M J | チップ抵抗 | | | 01 |
| R0251 | **RD350000** | Carbon Resistor (chip) | 0 63M J | チップ抵抗 | | | 01 |
| R0252 | **RD359100** | Carbon Resistor (chip) | 1.0M 63M J | チップ抵抗 | | | 01 |
| R0253 | **RD355100** | Carbon Resistor (chip) | 100.0 63M J | チップ抵抗 | | | 01 |
| R0254 | **RD356560** | Carbon Resistor (chip) | 5.6K 63M J | チップ抵抗 | | | 01 |
| -0257 | **RD356560** | Carbon Resistor (chip) | 5.6K 63M J | チップ抵抗 | | | 01 |
| R0258 | **RD357100** | Carbon Resistor (chip) | 10.0K 63M J | チップ抵抗 | | | 01 |
| R0259 | **RD358470** | Carbon Resistor (chip) | 470.0K 63M J | チップ抵抗 | | | 01 |
| R0260 | **RD358470** | Carbon Resistor (chip) | 470.0K 63M J | チップ抵抗 | | | 01 |
| R0261 | **RD357120** | Carbon Resistor (chip) | 12.0K 63M J | チップ抵抗 | | | 01 |
| -0263 | **RD357120** | Carbon Resistor (chip) | 12.0K 63M J | チップ抵抗 | | | 01 |
| R0264 | **RD356560** | Carbon Resistor (chip) | 5.6K 63M J | チップ抵抗 | | | 01 |
| R0265 | **RD356560** | Carbon Resistor (chip) | 5.6K 63M J | チップ抵抗 | | | 01 |
| R0266 | **RD357120** | Carbon Resistor (chip) | 12.0K 63M J | チップ抵抗 | | | 01 |
| R0267 | **RD356560** | Carbon Resistor (chip) | 5.6K 63M J | チップ抵抗 | | | 01 |
| R0268 | **RD356560** | Carbon Resistor (chip) | 5.6K 63M J | チップ抵抗 | | | 01 |
| R0269 | **RD357220** | Carbon Resistor (chip) | 22.0K 63M J | チップ抵抗 | | | 01 |
| R0270 | **RD357100** | Carbon Resistor (chip) | 10.0K 63M J | チップ抵抗 | | | 01 |
| R0271 | **RD357220** | Carbon Resistor (chip) | 22.0K 63M J | チップ抵抗 | | | 01 |
| R0272 | **RD357470** | Carbon Resistor (chip) | 47.0K 63M J | チップ抵抗 | | | 01 |
| R0273 | **RD355150** | Carbon Resistor (chip) | 150.0 63M J | チップ抵抗 | | | 01 |
| R0274 | **RD355150** | Carbon Resistor (chip) | 150.0 63M J | チップ抵抗 | | | 01 |
| R0275 | **RD350000** | Carbon Resistor (chip) | 0 63M J | チップ抵抗 | | | 01 |
| R0276 | **RD357100** | Carbon Resistor (chip) | 10.0K 63M J | チップ抵抗 | | | 01 |

∗: New Parts

RANK: Japan only

| REF NO. | PART NO. | DESCRIPTION | | 部品名 | REMARKS | QTY | RANK |
|---|---|---|---|---|---|---|---|
| R0277 | **RD356100** | Carbon Resistor (chip) | 1.0K 63M J | チップ抵抗 | | | 01 |
| R0278 | **RD356820** | Carbon Resistor (chip) | 8.2K 63M J | チップ抵抗 | | | 01 |
| R0279 | **RD357100** | Carbon Resistor (chip) | 10.0K 63M J | チップ抵抗 | | | 01 |
| R0280 | **RD357100** | Carbon Resistor (chip) | 10.0K 63M J | チップ抵抗 | | | 01 |
| R0281 | **RD355220** | Carbon Resistor (chip) | 220.0 63M J | チップ抵抗 | | | 01 |
| R0282 | **RD355220** | Carbon Resistor (chip) | 220.0 63M J | チップ抵抗 | | | 01 |
| R0283 | **RD356270** | Carbon Resistor (chip) | 2.7K 63M J | チップ抵抗 | | | 01 |
| R0284 | **RD357100** | Carbon Resistor (chip) | 10.0K 63M J | チップ抵抗 | | | 01 |
| -0287 | **RD357100** | Carbon Resistor (chip) | 10.0K 63M J | チップ抵抗 | | | 01 |
| R0288 | **RD355100** | Carbon Resistor (chip) | 100.0 63M J | チップ抵抗 | | | 01 |
| R0289 | **RD357100** | Carbon Resistor (chip) | 10.0K 63M J | チップ抵抗 | | | 01 |
| R0290 | **RD356470** | Carbon Resistor (chip) | 4.7K 63M J | チップ抵抗 | | | 01 |
| R0291 | **RD356470** | Carbon Resistor (chip) | 4.7K 63M J | チップ抵抗 | | | 01 |
| R0292 | **RD357100** | Carbon Resistor (chip) | 10.0K 63M J | チップ抵抗 | | | 01 |
| -0294 | **RD357100** | Carbon Resistor (chip) | 10.0K 63M J | チップ抵抗 | | | 01 |
| R0295 | **RD355220** | Carbon Resistor (chip) | 220.0 63M J | チップ抵抗 | | | 01 |
| R0296 | **RD354560** | Carbon Resistor (chip) | 56.0 63M J | チップ抵抗 | | | 01 |
| R0295 | **RD355220** | Carbon Resistor (chip) | 220.0 63M J | チップ抵抗 | | | 01 |
| -0298 | **RD355220** | Carbon Resistor (chip) | 220.0 63M J | チップ抵抗 | | | 01 |
| R0299 | **RD357100** | Carbon Resistor (chip) | 10.0K 63M J | チップ抵抗 | | | 01 |
| R0300 | **RD350000** | Carbon Resistor (chip) | 0 63M J | チップ抵抗 | | | 01 |
| R0301 | **RD350000** | Carbon Resistor (chip) | 0 63M J | チップ抵抗 | | | 01 |
| R0302 | **RD357100** | Carbon Resistor (chip) | 10.0K 63M J | チップ抵抗 | | | 01 |
| R0303 | **RD357100** | Carbon Resistor (chip) | 10.0K 63M J | チップ抵抗 | | | 01 |
| R0304 | **RD354680** | Carbon Resistor (chip) | 68.0 63M J | チップ抵抗 | | | 01 |
| R0306 | **RD355100** | Carbon Resistor (chip) | 100.0 63M J | チップ抵抗 | | | 01 |
| R0307 | **RD356100** | Carbon Resistor (chip) | 1.0K 63M J | チップ抵抗 | | | 01 |
| R0308 | **RD357100** | Carbon Resistor (chip) | 10.0K 63M J | チップ抵抗 | | | 01 |
| R0325 | **RD356100** | Carbon Resistor (chip) | 1.0K 63M J | チップ抵抗 | | | 01 |
| R0326 | **RD357100** | Carbon Resistor (chip) | 10.0K 63M J | チップ抵抗 | | | 01 |
| R0327 | **RD358470** | Carbon Resistor (chip) | 470.0K 63M J | チップ抵抗 | | | 01 |
| R0328 | **RD357100** | Carbon Resistor (chip) | 10.0K 63M J | チップ抵抗 | | | 01 |
| R0329 | **RD354680** | Carbon Resistor (chip) | 68.0 63M J | チップ抵抗 | | | 01 |
| R0330 | **RD358470** | Carbon Resistor (chip) | 470.0K 63M J | チップ抵抗 | | | 01 |
| R0333 | **RD350000** | Carbon Resistor (chip) | 0 63M J | チップ抵抗 | | | 01 |
| R0335 | **RD354680** | Carbon Resistor (chip) | 68.0 63M J | チップ抵抗 | | | 01 |
| -0341 | **RD354680** | Carbon Resistor (chip) | 68.0 63M J | チップ抵抗 | | | 01 |
| R0342 | **RD350000** | Carbon Resistor (chip) | 0 63M J | チップ抵抗 | | | 01 |
| R0343 | **RD354100** | Carbon Resistor (chip) | 10.0 63M J | チップ抵抗 | | | 01 |
| R0344 | **RD350000** | Carbon Resistor (chip) | 0 63M J | チップ抵抗 | | | 01 |
| -0346 | **RD350000** | Carbon Resistor (chip) | 0 63M J | チップ抵抗 | | | 01 |
| RA001 | **RE044680** | Resistor Array | 68X4 | 抵抗アレイ | | | 01 |
| -015 | **RE044680** | Resistor Array | 68X4 | 抵抗アレイ | | | 01 |
| RA024 | **RE044680** | Resistor Array | 68X4 | 抵抗アレイ | | | 01 |
| -028 | **RE044680** | Resistor Array | 68X4 | 抵抗アレイ | | | 01 |
| RY001 | **V2902800** | Relay | DC NAS-5W-K-TN 5V | リレー 5V | | | 04 |
| SW001 | **V3026900** | Jumper Wire | CHS-01 TA1 | ジャンパー SW | ON:J,OFF:U,B,E,N,K | | 02 |
| TR002 | **VV556400** | Transistor | 2SC2412K Q,R,S | トランジスタ | | | 01 |
| -004 | **VV556400** | Transistor | 2SC2412K Q,R,S | トランジスタ | | | 01 |
| TR005 | **VJ927200** | Transistor | 2SA1162 O,Y | トランジスタ | | | 01 |
| TR006 | **VV556400** | Transistor | 2SC2412K Q,R,S | トランジスタ | | | 01 |
| X0001 | **V3811500** | Ceramic Resonator | 16M CSTCV16M0X51J | セラミック振動子 | | | 01 |
| X0002 | **VR870700** | Quartz Crystal Unit | 10MHz SMD-49 | 水晶振動子 | | | 04 |
| X0004 | **V6074800** | Quartz Crystal Unit | 14.31818MHz SMD-49 | 水晶振動子 | | | 03 |
| X0005 | **V6074900** | Quartz Crystal Unit | 17.734475MHzSMD-49 | 水晶振動子 | | | 03 |
| X0006 | **VS486900** | Quartz Crystal Unit | 8.0MHz SMD-49 | 水晶振動子 | | | 03 |
| X0007 | **VV335600** | Quartz Crystal Unit | 33.8688MHz DSO751S | 水晶発振器 | | | 06 |
| ZD001 | **VU172200** | Zener Diode | UDZS6.8BTE-17 6.8V | ツェナーダイオード | | | 01 |
| | | | | | | | |
| | **--** | Circuit Board | FU60 | FU60シート | J (VT15140)(XQ395A0) | | |
| | **--** | Circuit Board | FU60 | FU60シート | U (VT15150)(XQ395A0) | | |
| | **--** | Circuit Board | FU60 | FU60シート | B,E,K (VT15160)(XQ395A0) | | |
| | **--** | Circuit Board | FU60 | FU60シート | N (VT15290)(XQ395A0) | | |
| | **--** | Jumper Wire | 0.55 | ジャンパー線 | (VD04170) | | |
| ⚠ | **VT308100** | AC Inlet | 2P CCT9302-0101M | AC インレット 2P | J,B,E,K,N | | 02 |
| ⚠ | **VT308200** | AC Inlet | 2P CCT9302-0201 | AC インレット 2P | U | | 02 |
| | **LB201530** | Fuse Holder | PC-FH1 | ヒューズホルダ | J,U,B,E,K | 2 | 01 |
| | **LB201530** | Fuse Holder | PC-FH1 | ヒューズホルダ | N | 6 | 01 |
| ⚠ | **VT139600** | Voltage Selector | M1684-E | 電圧切替器 | N | | 04 |
| ⚠ | **VT575200** | Capacitor | 0.01 400V J.U.C.S | 規格認定コンKC | | | 01 |

∗: New Parts

RANK: Japan only

| | REF NO. | PART NO. | DESCRIPTION | | 部品名 | REMARKS | QTY | RANK |
|---|---|---|---|---|---|---|---|---|
| ⚠ | C0001 | V7682800 | Capacitor | 0.010 VA1 J.U.C.S | 規格認定コン KH | ⌋ | | 01 |
| ⚠ | C0002 | FI383470 | Capacitor | 4700P 400V U.C.S.V | 規格認定コン | } | | 01 |
| ⚠ | C0002 | V7683000 | Capacitor | 4700P 250V J.U.C.S | 規格認定コン KH | ⌋ | | 01 |
| ⚠ | C0003 | FI383470 | Capacitor | 4700P 400V U.C.S.V | 規格認定コン | } | | 01 |
| ⚠ | C0003 | V7683000 | Capacitor | 4700P 250V J.U.C.S | 規格認定コン KH | ⌋ | | 01 |
| | CN001 | LB932030 | Base Post Connector | VH 3P TE | ベースポスト | | | 01 |
| | CN002 | LB932060 | Base Post Connector | VH 6P TE | ベースポスト | | | 01 |
| ⚠ | F0001 | KB003590 | Fuse | 3.00A JU | ヒューズ | J,U,N | | 01 |
| ⚠ | F0001 | KB003060 | Fuse | 1.60A S | ヒューズ | B,E,K | | 01 |
| ⚠ | F0002 | KB003060 | Fuse | 1.60A S | ヒューズ | N | | 01 |
| ⚠ | F0003 | KB003060 | Fuse | 1.60A S | ヒューズ | N | | 01 |
| | J0001 | -- | Jumper Wire | 0.55 | ジャンパー線 | J,U,B,E,K (VD04170) | | |
| | L0001 | -- | Jumper Wire | 0.55 | ジャンパー線 | (VD04170) | | |
| | L0002 | -- | Jumper Wire | 0.55 | ジャンパー線 | (VD04170) | | |
| | L0003 | VF790900 | Coil | SU10V-D20010 10uH | コイル 10U | | | 03 |
| | | | | | | | | |
| | | VZ705300 | Circuit Board | GH-D_SW H | GH－D＿SWシートH | (XT241A0) | | 13 |
| | | -- | Nonwoven Fabric Cloth | | 不織布 | (VU45980) | | |
| | CN1 | VB390500 | Connector Base Post | PH 9P TE | コネクタベースポスト | | | 03 |
| | CN2 | VB390800 | Connector Base Post | PH 12P TE | コネクタベースポスト | | | 01 |
| | D1 | VB941200 | Diode | 1SS133,1SS176 | ダイオード | | | 01 |
| | -108 | VB941200 | Diode | 1SS133,1SS176 | ダイオード | | | 01 |
| | | | | | | | | |
| | | VZ705200 | Circuit Board | GH-D_SW L | GH－D＿SWシートL | (XT240A0) | | 12 |
| | | -- | Nonwoven Fabric Cloth | | 不織布 | (VU45960) | | |
| | C1 | FG644100 | Ceramic Capacitor-F | 0.0100 50V Z | セラコン（F） | | | 01 |
| | -3 | FG644100 | Ceramic Capacitor-F | 0.0100 50V Z | セラコン（F） | | | 01 |
| | C5 | VF760000 | Electrolytic Cap.-KS | 100.00 10.0V | ケミコンKS | | | 01 |
| | CL1 | VI653000 | Ceramic Resonator | CSTLA4M00G58Y02-B0 | セラミック振動子 | | | 01 |
| | CN1 | VB390400 | Connector Base Post | PH 8P TE | コネクタベースポスト | | | 01 |
| | CN2 | VB390500 | Connector Base Post | PH 9P TE | コネクタベースポスト | | | 03 |
| | CN3 | VB390800 | Connector Base Post | PH 12P TE | コネクタベースポスト | | | 01 |
| | D2 | VB941200 | Diode | 1SS133,1SS176 | ダイオード | | | 01 |
| | D5 | VB941200 | Diode | 1SS133,1SS176 | ダイオード | | | 01 |
| | -72 | VB941200 | Diode | 1SS133,1SS176 | ダイオード | | | 01 |
| | J1 | -- | Jumper Wire | 0.55 | ジャンパー線 | (VD04170) | | |
| | J2 | -- | Jumper Wire | 0.55 | ジャンパー線 | (VD04170) | | |
| | KSN2 | XR632A00 | IC | YMZ702-D | IC | KSN2 | | 09 |
| | R1 | HF759100 | Carbon Resistor | 1.0M 1/4 J | カーボン抵抗 | | | 01 |
| | R2 | HF755100 | Carbon Resistor | 100.0 1/4 J | カーボン抵抗 | | | 01 |
| | R3 | HF755100 | Carbon Resistor | 100.0 1/4 J | カーボン抵抗 | | | 01 |
| | R4 | HF756100 | Carbon Resistor | 1.0K 1/4 J | カーボン抵抗 | | | 01 |
| | RA1 | VU483500 | Resistor Array | RGLD12X103J | 抵抗アレイ | | | 01 |
| | | | | | | | | |
| | | V7135900 | Circuit Board | GLC | GLCシート | (V713570)(XZ883C0) | | 08 |
| | | V7135800 | Circuit Board | GLL | GLLシート | (V713570)(XZ883C0) | | 08 |
| | | V7136100 | Circuit Board | GLR | GLRシート | (V713570)(XZ883C0) | | 08 |
| | LD001 | V7446700 | LED | SCI-343URTB7 | LED | Keyboard Guide lamp | | 01 |
| | -088 | V7446700 | LED | SCI-343URTB7 | LED | Keyboard Guide lamp | | 01 |
| | WH001 | -- | Connector Assembly | GL1 | GL1束線 | (V753060) | | |
| | WH002 | -- | Connector Assembly | GL2 | GL2束線 | (V753070) | | |
| | WH003 | -- | Connector Assembly | GL1 | GL1束線 | (V753060) | | |
| | | | | | | | | |
| | | V8115900 | Circuit Board | HP | HPシート | (XQ795A0,XT162A0) | | 07 |
| | | -- | Jumper Wire | 0.55 | ジャンパー線 | (VD04170) | | |
| | C1 | VE659000 | Semiconductive Cera. Cap. | 0.1000 25V Z | 半導体セラコン | | | 01 |
| | -5 | VE659000 | Semiconductive Cera. Cap. | 0.1000 25V Z | 半導体セラコン | | | 01 |
| | C6 | -- | Jumper Wire | 0.55 | ジャンパー線 | (VD04170) | | |
| | C7 | -- | Jumper Wire | 0.55 | ジャンパー線 | (VD04170) | | |
| | CN1 | VB858600 | Connector Base Post | PH 7P SE | コネクタベースポスト | | | 01 |
| | CN3 | LB919020 | Base Post Connector | XH 2P SE | ベーステツキポスト | | | 01 |
| | FL1 | VB971100 | Coil | FL5R200QN 20uH | コイル 20U | | | 01 |
| | -6 | VB971100 | Coil | FL5R200QN 20uH | コイル 20U | | | 01 |
| | HP1 | LB101870 | Phone Jack | YKB21-5006 | ホーンコネクタ | PHONES | | 03 |
| | HP2 | LB101870 | Phone Jack | YKB21-5006 | ホーンコネクタ | PHONES | | 03 |
| | R1 | VK992200 | Carbon Resistor | 68.0 1/2 J | カーボン抵抗 | | | 01 |
| | -4 | VK992200 | Carbon Resistor | 68.0 1/2 J | カーボン抵抗 | | | 01 |
| | R5 | -- | Jumper Wire | 0.55 | ジャンパー線 | (VD04170) | | |
| | | | | | | | | |
| | | V7170200 | Circuit Board | INV | INVシート | (V713450)(XZ881C0) | | 05 |

∗: New Parts

RANK: Japan only

| REF NO. | PART NO. | DESCRIPTION | | 部品名 | REMARKS | QTY | RANK |
|---|---|---|---|---|---|---|---|
| | **V7134700** | Circuit Board | MV | **MVシート** | (V713450)(XZ881C0) | | 04 |
| | **V7135100** | Circuit Board | PNCB | **PNCBシート** | (V713450)(XZ881C0) | | 05 |
| | **V7134600** | Circuit Board | PNL | **PNLシート** | (V713450)(XZ881C0) | | 11 |
| | **--** | Jumper Wire | 0.55 | **ジャンパー線** | (VA07890) | | |
| C0301 | **UA353220** | Mylar Capacitor | 2200P 50V J | **マイラーコン** | | | 01 |
| C0302 | **VR169200** | Monolithic Mylar Capacitor | ECQ-V1H474JL3 0.47 | **積層マイラーコン** | | | 01 |
| C0303 | **VR169200** | Monolithic Mylar Capacitor | ECQ-V1H474JL3 0.47 | **積層マイラーコン** | | | 01 |
| C0304 | **UA353220** | Mylar Capacitor | 2200P 50V J | **マイラーコン** | | | 01 |
| C0401 | **VP318400** | Electrolytic Cap. (chip) | 0.068 250 ECQE26 | **コンデンサ** | | | 01 |
| C0402 | **VS147400** | Ceramic Capacitor-SL | 18P 3KV J | **セラコンSL** | | | 01 |
| C0404 | **UR838100** | Electrolytic Cap. | 100.00 16.0V | **ケミコン** | | | 01 |
| CN001 | **VB858900** | Connector Base Post | PH 10P SE | **コネクタベースポスト** | | | 01 |
| CN002 | **VB858700** | Connector Base Post | PH 8P SE | **コネクタベースポスト** | | | 01 |
| CN003 | **VC166500** | Connector Base Post | PH 12P SE | **コネクタベースポスト** | | | 01 |
| CN004 | **VK015400** | Connector Base Post | PH 13P SE | **コネクタベースポスト** | | | 01 |
| CN005 | **VK015400** | Connector Base Post | PH 13P SE | **コネクタベースポスト** | | | 01 |
| CN006 | **VH904200** | Connector Base Post | PH 14P SE | **コネクタベースポスト** | | | 01 |
| CN201 | **VK015400** | Connector Base Post | PH 13P SE | **コネクタベースポスト** | | | 01 |
| CN301 | **VB858700** | Connector Base Post | PH 8P SE | **コネクタベースポスト** | | | 01 |
| CN401 | **LB919030** | Base Post Connector | XH 3P SE | **ベーススツキポスト** | | | 01 |
| CN402 | **VT389600** | Base Post Connector | 53259 4P SE | **ベースポスト** | | | 01 |
| D0001 | **VB941200** | Diode | 1SS133,1SS176 | **ダイオード** | | | 01 |
| -0030 | **VB941200** | Diode | 1SS133,1SS176 | **ダイオード** | | | 01 |
| D0201 | **VB941200** | Diode | 1SS133,1SS176 | **ダイオード** | | | 01 |
| -0218 | **VB941200** | Diode | 1SS133,1SS176 | **ダイオード** | | | 01 |
| D0401 | **VD631600** | Diode | 1SS133,176,HSS104 | **ダイオード** | | | 01 |
| J0401 | **--** | Jumper Wire | 0.55 | **ジャンパー線** | (VA07890) | | |
| L0401 | **VS587900** | Coil | LH L 08TB221K 220u | **コイル220UH** | | | 01 |
| L0402 | **VS587900** | Coil | LH L 08TB221K 220u | **コイル220UH** | | | 01 |
| L0403 | **--** | Jumper Wire | 0.55 | **ジャンパー線** | (VA07890) | | |
| L0404 | **--** | Jumper Wire | 0.55 | **ジャンパー線** | (VA07890) | | |
| LD001 | **V7767400** | LED Red | SLZ-981B-09-T1 | **LED** | METRONOME(START/STOP) | | 01 |
| LD002 | **V7767400** | LED Red | SLZ-981B-09-T1 | **LED** | FADE IN/OUT | | 01 |
| LD003 | **V7767400** | LED Red | SLZ-981B-09-T1 | **LED** | STYLE(ACMP) | | 01 |
| LD004 | **V7767400** | LED Red | SLZ-981B-09-T1 | **LED** | STYLE(AUTO FILL IN) | | 01 |
| LD005 | **V7767400** | LED Red | SLZ-981B-09-T1 | **LED** | STYLE(OTS LINK) | | 01 |
| LD006 | **V7481600** | LED Green/Red | GL3ED403B0V | **2色LED** | STYLE(BREAK) | | 01 |
| LD007 | **V7481600** | LED Green/Red | GL3ED403B0V | **2色LED** | SONG(EXTRA TRACKS) | | 01 |
| LD008 | **V7767400** | LED Red | SLZ-981B-09-T1 | **LED** | SONG(REC) | | 01 |
| LD009 | **V7481600** | LED Green/Red | GL3ED403B0V | **2色LED** | STYLE(INTRO) | | 01 |
| LD010 | **V7481600** | LED Green/Red | GL3ED403B0V | **2色LED** | SONG(TRACK 2) | | 01 |
| LD011 | **V7481600** | LED Green/Red | GL3ED403B0V | **2色LED** | STYLE(MAIN A) | | 01 |
| LD012 | **V7481600** | LED Green/Red | GL3ED403B0V | **2色LED** | SONG(TRACK 1) | | 01 |
| LD013 | **V7481600** | LED Green/Red | GL3ED403B0V | **2色LED** | SONG(START/STOP) | | 01 |
| LD014 | **V7481600** | LED Green/Red | GL3ED403B0V | **2色LED** | STYLE(MAIN B) | | 01 |
| LD015 | **V7481600** | LED Green/Red | GL3ED403B0V | **2色LED** | STYLE(MAIN C) | | 01 |
| LD016 | **V7481600** | LED Green/Red | GL3ED403B0V | **2色LED** | STYLE(MAIN D) | | 01 |
| LD017 | **V7767400** | LED Red | SLZ-981B-09-T1 | **LED** | SONG(REPEAT) | | 01 |
| LD018 | **V7481600** | LED Green/Red | GL3ED403B0V | **2色LED** | STYLE(ENDING/rlt.) | | 01 |
| LD019 | **V7767400** | LED Red | SLZ-981B-09-T1 | **LED** | SONG(GUIDE) | | 01 |
| LD020 | **V7767400** | LED Red | SLZ-981B-09-T1 | **LED** | STYLE(SYNC.STOP) | | 01 |
| LD021 | **V7767400** | LED Red | SLZ-981B-09-T1 | **LED** | STYLE(SYNC.START) | | 01 |
| LD022 | **V7481600** | LED Green/Red | GL3ED403B0V | **2色LED** | STYLE(START/STOP) | | 01 |
| R0001 | **HF754820** | Carbon Resistor | 82.0 1/4 J | **カーボン抵抗** | | | 01 |
| -0012 | **HF754820** | Carbon Resistor | 82.0 1/4 J | **カーボン抵抗** | | | 01 |
| R0301 | **HF756390** | Carbon Resistor | 3.9K 1/4 J | **カーボン抵抗** | | | 01 |
| R0302 | **HF756180** | Carbon Resistor | 1.8K 1/4 J | **カーボン抵抗** | | | 01 |
| R0303 | **HF756180** | Carbon Resistor | 1.8K 1/4 J | **カーボン抵抗** | | | 01 |
| R0304 | **HF756390** | Carbon Resistor | 3.9K 1/4 J | **カーボン抵抗** | | | 01 |
| R0401 | **HF456150** | Carbon Resistor | 1.5K 1/4 J | **カーボン抵抗** | | | 01 |
| R0402 | **HF456270** | Carbon Resistor | 2.7K 1/4 J | **カーボン抵抗** | | | 01 |
| R0404 | **HF457220** | Carbon Resistor | 22.0K 1/4 J | **カーボン抵抗** | | | 01 |
| SW001 | **VV439800** | Tact Switch | SKQNAJ | **タクトSW** | METRONOME(START/STOP) | | 01 |
| SW002 | **VV439800** | Tact Switch | SKQNAJ | **タクトSW** | FADE IN/OUT | | 01 |
| SW003 | **VV439800** | Tact Switch | SKQNAJ | **タクトSW** | STYLE(ACMP) | | 01 |
| SW004 | **VV439800** | Tact Switch | SKQNAJ | **タクトSW** | STYLE(AUTO FILL IN) | | 01 |
| SW005 | **VV439800** | Tact Switch | SKQNAJ | **タクトSW** | STYLE(OTS LINK) | | 01 |
| SW006 | **VV439800** | Tact Switch | SKQNAJ | **タクトSW** | STYLE(BREAK) | | 01 |
| SW007 | **VV439800** | Tact Switch | SKQNAJ | **タクトSW** | SONG(EXTRA TRACKS) | | 01 |
| SW008 | **VV439800** | Tact Switch | SKQNAJ | **タクトSW** | SONG(REC) | | 01 |

∗: New Parts

RANK: Japan only

| REF NO. | PART NO. | DESCRIPTION | | 部品名 | REMARKS | QTY | RANK |
|---|---|---|---|---|---|---|---|
| SW009 | **VV439800** | Tact Switch | SKQNAJ | タクトSW | TEMPO(-) | | 01 |
| SW010 | **VV439800** | Tact Switch | SKQNAJ | タクトSW | STYLE(INTRO) | | 01 |
| SW011 | **VV439800** | Tact Switch | SKQNAJ | タクトSW | SONG(TRACK 2) | | 01 |
| SW012 | **VV439800** | Tact Switch | SKQNAJ | タクトSW | SONG(TOP) | | 01 |
| SW013 | **VV439800** | Tact Switch | SKQNAJ | タクトSW | TEMPO(+) | | 01 |
| SW014 | **VV439800** | Tact Switch | SKQNAJ | タクトSW | STYLE(MAIN A) | | 01 |
| SW015 | **VV439800** | Tact Switch | SKQNAJ | タクトSW | SONG(TRACK 1) | | 01 |
| SW016 | **VV439800** | Tact Switch | SKQNAJ | タクトSW | SONG(START/STOP) | | 01 |
| SW017 | **VV439800** | Tact Switch | SKQNAJ | タクトSW | TEMPO(TAP TEMPO) | | 01 |
| SW018 | **VV439800** | Tact Switch | SKQNAJ | タクトSW | STYLE(MAIN B) | | 01 |
| SW019 | **VV439800** | Tact Switch | SKQNAJ | タクトSW | SONG(REW) | | 01 |
| SW020 | **VV439800** | Tact Switch | SKQNAJ | タクトSW | TRANSPOSE(-) | | 01 |
| SW021 | **VV439800** | Tact Switch | SKQNAJ | タクトSW | STYLE(MAIN C) | | 01 |
| SW022 | **VV439800** | Tact Switch | SKQNAJ | タクトSW | SONG(FF) | | 01 |
| SW023 | **VV439800** | Tact Switch | SKQNAJ | タクトSW | TRANSPOSE(+) | | 01 |
| SW024 | **VV439800** | Tact Switch | SKQNAJ | タクトSW | STYLE(MAIN D) | | 01 |
| SW025 | **VV439800** | Tact Switch | SKQNAJ | タクトSW | SONG(REPEAT) | | 01 |
| SW026 | **VV439800** | Tact Switch | SKQNAJ | タクトSW | STYLE(ENDING/rlt.) | | 01 |
| SW027 | **VV439800** | Tact Switch | SKQNAJ | タクトSW | SONG(GUIDE) | | 01 |
| SW028 | **VV439800** | Tact Switch | SKQNAJ | タクトSW | STYLE(SYNC.STOP) | | 01 |
| SW029 | **VV439800** | Tact Switch | SKQNAJ | タクトSW | STYLE(SYNC.START) | | 01 |
| SW030 | **VV439800** | Tact Switch | SKQNAJ | タクトSW | STYLE(START/STOP) | | 01 |
| SW201 | **VV056000** | Tact Switch | SKQNAED010 | タクトSW | DIRECT ACCESS | | 01 |
| SW202 | **VV056000** | Tact Switch | SKQNAED010 | タクトSW | LCD select up (1) | | 01 |
| SW203 | **VV056000** | Tact Switch | SKQNAED010 | タクトSW | LCD select down (1) | | 01 |
| SW204 | **VV056000** | Tact Switch | SKQNAED010 | タクトSW | LCD select up (2) | | 01 |
| SW205 | **VV056000** | Tact Switch | SKQNAED010 | タクトSW | LCD select down (2) | | 01 |
| SW206 | **VV056000** | Tact Switch | SKQNAED010 | タクトSW | LCD select up (3) | | 01 |
| SW207 | **VV056000** | Tact Switch | SKQNAED010 | タクトSW | LCD select down (3) | | 01 |
| SW208 | **VV056000** | Tact Switch | SKQNAED010 | タクトSW | LCD select up (4) | | 01 |
| SW209 | **VV056000** | Tact Switch | SKQNAED010 | タクトSW | LCD select down (4) | | 01 |
| SW210 | **VV056000** | Tact Switch | SKQNAED010 | タクトSW | LCD select up (5) | | 01 |
| SW211 | **VV056000** | Tact Switch | SKQNAED010 | タクトSW | LCD select down (5) | | 01 |
| SW212 | **VV056000** | Tact Switch | SKQNAED010 | タクトSW | LCD select up (6) | | 01 |
| SW213 | **VV056000** | Tact Switch | SKQNAED010 | タクトSW | LCD select down (+6) | | 01 |
| SW214 | **VV056000** | Tact Switch | SKQNAED010 | タクトSW | LCD select up (7) | | 01 |
| SW215 | **VV056000** | Tact Switch | SKQNAED010 | タクトSW | LCD select down (7) | | 01 |
| SW216 | **VV056000** | Tact Switch | SKQNAED010 | タクトSW | LCD select up (8) | | 01 |
| SW217 | **VV056000** | Tact Switch | SKQNAED010 | タクトSW | LCD select down (8) | | 01 |
| SW218 | **VV056000** | Tact Switch | SKQNAED010 | タクトSW | EXIT | | 01 |
| T0401 | **VS602500** | Inverter Transformer | CLF16A | インバータトランス | | | 07 |
| TR401 | **VS185700** | Transistor | 2SC3669-O/Y(TPF2) | トランジスタ | | | 01 |
| TR401 | **VS185600** | Transistor | 2SD1863 TV2 82-390 | トランジスタ | | | 01 |
| TR402 | **VS185700** | Transistor | 2SC3669-O/Y(TPF2) | トランジスタ | | | 01 |
| TR402 | **VS185600** | Transistor | 2SD1863 TV2 82-390 | トランジスタ | | | 01 |
| TR403 | **VP872600** | Transistor | 2SA1708 S,T | トランジスタ | | | 01 |
| * VR301 | **WB123800** | Rotary Variable Resistor | 1BM 10K XV014111YG | 二連ロータリーVR | MASTER VOLUME | | |
| | | | | | | | |
| | **VT143900** | Circuit Board | MA60 | MA60シート | J,U (XQ393E0,XQ778F0) | | 18 |
| | **VT144000** | Circuit Board | MA60 | MA60シート | B,E,N,K (XQ393E0,XQ778F0) | | 22 |
| | **VT443500** | Support, PCB | T=8 | 三端子用スペーサー | | | 03 |
| | **VT740000** | Support, PCB | 3T-9 T=9 | 三端子用スペーサー | | 3 | 03 |
| | **VJ834500** | Insulation Sheet | #1000 | 放熱シート（パワー） | | | 03 |
| | **--** | Jumper Wire | 0.55 | ジャンパー線 | (VD04170) | | |
| C0001 | **VA302600** | Ceramic Capacitor-E | 0.0100 500V P | セラコン（E） | | | 01 |
| C0003 | **VU642700** | Electrolytic Cap. | 4700 16.0V | ケミコン | | | 03 |
| C0003 | **V0069900** | Electrolytic Cap. | 4700 16.0V | ケミコン | | | |
| C0004 | **VU642700** | Electrolytic Cap. | 4700 16.0V | ケミコン | | | 03 |
| C0004 | **V0069900** | Electrolytic Cap. | 4700 16.0V | ケミコン | | | |
| C0005 | **VL232400** | Electrolytic Cap. | 3300 35.0V | ケミコン | | | 04 |
| -0008 | **VL232400** | Electrolytic Cap. | 3300 35.0V | ケミコン | | | 04 |
| C0009 | **UR866100** | Electrolytic Cap. | 1.00 50.0V | ケミコン | | | 01 |
| -0011 | **UR866100** | Electrolytic Cap. | 1.00 50.0V | ケミコン | | | 01 |
| C0012 | **FG613100** | Ceramic Capacitor-B | 1000P 50V K | セラコン（B） | | | 01 |
| C0013 | **UR838100** | Electrolytic Cap. | 100.00 16.0V | ケミコン | | | 01 |
| C0016 | **UR866100** | Electrolytic Cap. | 1.00 50.0V | ケミコン | | | 01 |
| C0017 | **VC694800** | Semiconductive Cera. Cap. | 0.1000 25V Z | 半導体セラコン | | | 01 |
| C0018 | **UR866100** | Electrolytic Cap. | 1.00 50.0V | ケミコン | | | 01 |
| C0019 | **UR866100** | Electrolytic Cap. | 1.00 50.0V | ケミコン | | | 01 |
| C0020 | **UR868100** | Electrolytic Cap. | 100.00 50.0V | ケミコン | | | 01 |

*: New Parts

RANK: Japan only

| REF NO. | PART NO. | DESCRIPTION | | 部品名 | REMARKS | QTY | RANK |
|---|---|---|---|---|---|---|---|
| C0021 | **UR868100** | Electrolytic Cap. | 100.00 50.0V | ケミコン | | | 01 |
| C0022 | **FG613100** | Ceramic Capacitor-B | 1000P 50V K | セラコン(B) | | | 01 |
| C0023 | **UR866100** | Electrolytic Cap. | 1.00 50.0V | ケミコン | | | 01 |
| C0024 | **UR838100** | Electrolytic Cap. | 100.00 16.0V | ケミコン | | | 01 |
| C0025 | **VC694800** | Semiconductive Cera. Cap. | 0.1000 25V Z | 半導体セラコン | | | 01 |
| C0026 | **VC694800** | Semiconductive Cera. Cap. | 0.1000 25V Z | 半導体セラコン | | | 01 |
| C0027 | **FG613100** | Ceramic Capacitor-B | 1000P 50V K | セラコン(B) | | | 01 |
| C0028 | **UR866100** | Electrolytic Cap. | 1.00 50.0V | ケミコン | | | 01 |
| C0029 | **UR838100** | Electrolytic Cap. | 100.00 16.0V | ケミコン | | | 01 |
| C0030 | **VC694800** | Semiconductive Cera. Cap. | 0.1000 25V Z | 半導体セラコン | | | 01 |
| C0031 | **VC694800** | Semiconductive Cera. Cap. | 0.1000 25V Z | 半導体セラコン | | | 01 |
| C0032 | **UR838100** | Electrolytic Cap. | 100.00 16.0V | ケミコン | | | 01 |
| C0033 | **UR866330** | Electrolytic Cap. | 3.30 50.0V | ケミコン | | | 01 |
| CN001 | **LB932050** | Base Post Connector | VH 5P TE | ベースポスト | | | 01 |
| CN003 | **LB918030** | Base Post Connector | XH 3P TE | ベーススツキポスト | | | 01 |
| CN004 | **VB390300** | Connector Base Post | PH 7P TE | コネクタベースポスト | | | 01 |
| CN005 | **LB932040** | Base Post Connector | VH 4P TE | ベースポスト | | | 01 |
| CN006 | **VB390500** | Connector Base Post | PH 9P TE | コネクタベースポスト | | | 03 |
| D0001 | **VB481900** | Diode | 11ES4 | ダイオード | | | 01 |
| -0005 | **VB481900** | Diode | 11ES4 | ダイオード | | | 01 |
| D0001 | **V7803100** | Diode | 1T4-T/A52 | ダイオード | | | |
| -0005 | **V7803100** | Diode | 1T4-T/A52 | ダイオード | | | |
| D0001 | **V9362200** | Diode | 1T4-T/A26 | ダイオード | | | |
| -0005 | **V9362200** | Diode | 1T4-T/A26 | ダイオード | | | |
| DB001 | **VK421800** | Diode Stack | D5SBA20 6.0A 200V | ダイオードスタック | | | 03 |
| DB002 | **VQ111500** | Diode Stack | D3SBA20-4103 4.0A | ダイオードスタック | | | 03 |
| ⚠ F0001 | **KB003630** | Fuse | 5.00A JU | ヒューズ | J,U | | 01 |
| ⚠ -0003 | **KB003630** | Fuse | 5.00A JU | ヒューズ | J,U | | 01 |
| ⚠ F0001 | **KB003240** | Fuse | 5.00A S | ヒューズ | B,E,N,K | | 01 |
| ⚠ -0003 | **KB003240** | Fuse | 5.00A S | ヒューズ | B,E,N,K | | 01 |
| FUHOL | **VP206500** | Fuse Holder | EYF-52BC | ヒューズホルダ | | | 01 |
| IC001 | **XQ437A00** | IC | SI-3051N | IC | REGULATOR +5V | | 03 |
| IC002 | **XQ667A00** | IC | M5237L | IC | REGULATOR +5V | | 02 |
| IC003 | **XJ602A00** | IC | NJM78M12FA | IC | REGULATOR +12V 0.5A | | 02 |
| IC004 | **XD343A00** | IC | NJM79M12FA | IC | REGULATOR -12V | | 03 |
| IC005 | **XL972A00** | IC | STK401-040 | IC | POWER AMP | | 08 |
| J0003 | **--** | Jumper Wire | 0.55 | ジャンパー線 | (VD04170) | | |
| J0004 | **--** | Jumper Wire | 0.55 | ジャンパー線 | (VD04170) | | |
| R0003 | **HF756100** | Carbon Resistor | 1.0K 1/4 J | カーボン抵抗 | | | 01 |
| R0004 | **HF755220** | Carbon Resistor | 220.0 1/4 J | カーボン抵抗 | | | 01 |
| R0005 | **HF754560** | Carbon Resistor | 56.0 1/4 J | カーボン抵抗 | | | 01 |
| R0006 | **VC328800** | Metal Film Resistor | 10.0K 1/4 F | 金属被膜抵抗 | | | 01 |
| R0006 | **HB027100** | Metal Film Resistor | 10.0K 1/4 F | 金属被膜抵抗 | | | |
| R0007 | **VC327600** | Metal Film Resistor | 3.3K 1/4 F | 金属被膜抵抗 | | | 01 |
| R0007 | **HB026330** | Metal Film Resistor | 3.3K 1/4 F | 金属被膜抵抗 | | | |
| R0008 | **HW095100** | Fuse Resistor | 100.0 1/4 J | ヒューズ抵抗 | | | 01 |
| R0009 | **HW095100** | Fuse Resistor | 100.0 1/4 J | ヒューズ抵抗 | | | 01 |
| R0010 | **HF755560** | Carbon Resistor | 560.0 1/4 J | カーボン抵抗 | | | 01 |
| R0011 | **HF757100** | Carbon Resistor | 10.0K 1/4 J | カーボン抵抗 | | | 01 |
| R0012 | **HF755560** | Carbon Resistor | 560.0 1/4 J | カーボン抵抗 | | | 01 |
| R0013 | **HF757100** | Carbon Resistor | 10.0K 1/4 J | カーボン抵抗 | | | 01 |
| R0014 | **VC742500** | Metal Oxide Film Resistor | 10.0 1W J | 酸化金属被膜抵抗 | | | 01 |
| R0015 | **HF757100** | Carbon Resistor | 10.0K 1/4 J | カーボン抵抗 | | | 01 |
| R0016 | **HF755560** | Carbon Resistor | 560.0 1/4 J | カーボン抵抗 | | | 01 |
| R0017 | **HF757100** | Carbon Resistor | 10.0K 1/4 J | カーボン抵抗 | | | 01 |
| R0018 | **HF755560** | Carbon Resistor | 560.0 1/4 J | カーボン抵抗 | | | 01 |
| R0019 | **HF757100** | Carbon Resistor | 10.0K 1/4 J | カーボン抵抗 | | | 01 |
| R0020 | **VC742500** | Metal Oxide Film Resistor | 10.0 1W J | 酸化金属被膜抵抗 | | | 01 |
| R0021 | **HF757100** | Carbon Resistor | 10.0K 1/4 J | カーボン抵抗 | | | 01 |
| R0022 | **HF756330** | Carbon Resistor | 3.3K 1/4 J | カーボン抵抗 | | | 01 |
| R0023 | **HF756330** | Carbon Resistor | 3.3K 1/4 J | カーボン抵抗 | | | 01 |
| RY001 | **VK881200** | Relay | DC G5Z-2A-YA 12V | リレー 12V | | | 04 |
| TR001 | **VJ828100** | Transistor | 2SA1451A-O/Y O.Y | トランジスタ | | | 04 |
| TR002 | **IC1815M0** | Transistor | 2SC1815 Y,GR | トランジスタ | | | 01 |
| -004 | **IC1815M0** | Transistor | 2SC1815 Y,GR | トランジスタ | | | 01 |
| | | | | | | | |
| | **V7596600** | Circuit Board | MIC | MICシート | (XV507D0) | | 08 |
| | **--** | Jumper Wire | 0.55 | ジャンパー線 | (VD04170) | | |
| C0100 | **UB013270** | Monolithic Ceramic Cap. | B 2700P 50V K | チップ積層セラコン | | | 01 |
| C0101 | **UB445470** | Monolithic Ceramic Cap. | F 0.470 16V Z | チップ積層セラコン | | | 01 |

∗: New Parts

RANK: Japan only

| REF NO. | PART NO. | DESCRIPTION | | 部品名 | REMARKS | QTY | RANK |
|---|---|---|---|---|---|---|---|
| C0102 | **UB052100** | Monolithic Ceramic Cap. | SL 100P 50V J | チップ積層セラコン | | | 01 |
| C0150 | **UB052220** | Monolithic Ceramic Cap. | SL 220P 50V J | チップ積層セラコン | | | 01 |
| C0151 | **UB446100** | Ceramic Capacitor-F (chip) | F 1.0 16V Z | チップセラ F | | | 01 |
| C0152 | **UB052100** | Monolithic Ceramic Cap. | SL 100P 50V J | チップ積層セラコン | | | 01 |
| C0200 | **UB446100** | Ceramic Capacitor-F (chip) | F 1.0 16V Z | チップセラ F | | | 01 |
| C0201 | **UB013100** | Monolithic Ceramic Cap. | B 1000P 50V K | チップ積層セラコン | | | 01 |
| C0300 | **UB045100** | Monolithic Ceramic Cap. | F 0.100 50V Z | チップ積層セラコン | | | 01 |
| C0301 | **UR848100** | Electrolytic Cap. | 100.00 25.0V | ケミコン | | | 01 |
| C0302 | **UR848100** | Electrolytic Cap. | 100.00 25.0V | ケミコン | | | 01 |
| C0303 | **UB045100** | Monolithic Ceramic Cap. | F 0.100 50V Z | チップ積層セラコン | | | 01 |
| C0304 | **UB045100** | Monolithic Ceramic Cap. | F 0.100 50V Z | チップ積層セラコン | | | 01 |
| CN300 | **VB858400** | Connector Base Post | PH 5P SE | コネクタベースポスト | | | 01 |
| CN301 | **VB858100** | Connector Base Post | PH 2P SE | コネクタベースポスト | | | 01 |
| IC100 | **XF291A00** | IC | UPC4570G2 | IC | OP AMP | | 03 |
| J | **RD250000** | Carbon Resistor (chip) | 0.0 0.0 J | チップ抵抗 | | | 01 |
| JK200 | **LB101870** | Phone Jack | YKB21-5006 | ホーンコネクタ | MIC./LINE IN | | 03 |
| L0200 | **--** | Jumper Wire | 0.55 | ジャンパー線 | (VD04170) | | |
| L0201 | **VB835000** | Coil | FL5R200QNT 20uH | コイル 20U | | | 01 |
| L0201 | **V2993400** | Choke Coil | R-5C.20uH | チョークコイル20μH | | | 01 |
| R0100 | **RD256100** | Carbon Resistor (chip) | 1.0K 0.1 J | チップ抵抗 | | | 01 |
| R0101 | **RD257100** | Carbon Resistor (chip) | 10.0K 0.1 J | チップ抵抗 | | | 01 |
| R0150 | **RD257270** | Carbon Resistor (chip) | 27.0K 0.1 J | チップ抵抗 | | | 01 |
| R0151 | **RD256100** | Carbon Resistor (chip) | 1.0K 0.1 J | チップ抵抗 | | | 01 |
| R0301 | **RD250000** | Carbon Resistor (chip) | 0.0 0.0 J | チップ抵抗 | | | 01 |
| R0400 | **RD255470** | Carbon Resistor (chip) | 470.0 0.1 J | チップ抵抗 | | | 01 |
| SW400 | **VZ050000** | Slide Switch | SSSF122-S09N0 | スライドSW | MIC./LINE | | 01 |
| VR500 | **V3340000** | Rotary Variable Resistor | A 10.0K RK0971230 | ロータリーVR 2レン | INPUT VOLUME | | 04 |
| WB300 | **GE300670** | Ferrite Bead | BL02RN2-R62T4 | フェライトビーズ | | | 02 |
| -304 | **GE300670** | Ferrite Bead | BL02RN2-R62T4 | フェライトビーズ | | | 02 |
| WB300 | **V2635200** | Ferrite Bead | RH03506BT-B | フェライトビーズ | | | |
| -304 | **V2635200** | Ferrite Bead | RH03506BT-B | フェライトビーズ | | | |
| | | | | | | | |
| | **V7747300** | Circuit Board | NET1 | NET1シート | (XT123B0) | | 05 |
| | **--** | Jumper Wire | 0.55 | ジャンパー線 | (VD04170) | | |
| C0001 | **V5928500** | Electrolytic Cap.-BP | 2.20 63.0V | BPケミコン | | | |
| C0002 | **V5928500** | Electrolytic Cap.-BP | 2.20 63.0V | BPケミコン | | | |
| CN001 | **LB932040** | Base Post Connector | VH 4P TE | ベースポスト | | | 01 |
| CN002 | **LB932080** | Base Post Connector | VH 8P TE | ベースポスト | | | 01 |
| | | | | | | | |
| | **VZ151300** | Circuit Board | PEDAL(SW) | ペダルシート | (VZ15120)(XR780B0) | | 07 |
| | **VZ151400** | Circuit Board | PEDAL VR | ペダルVRシート | (VZ15120)(XR780B0) | | 07 |
| | **--** | Jumper Wire | 0.55 | ジャンパー線 | (VD04170) | | |
| | **--** | Earth Wire | L=30 | アース束線 | (VZ01760) | | |
| CN1 | **VB390200** | Connector Base Post | PH 6P TE | コネクタベースポスト | | | 01 |
| VR | **HS412520** | Rotary Variable Resistor | RK16Y11L0001A | ロータリーVR1連 | DAMPER Pedal | | 05 |
| | | | | | | | |
| | **V7134800** | Circuit Board | PNCL | PNCLシート | (V713500)(X0080C0) | | 07 |
| | **V7134900** | Circuit Board | PNCR | PNCRシート | (V713500)(X0080C0) | | 07 |
| CN101 | **VF283100** | Connector Base Post | PH 13P TE | コネクタベースポスト | | | 01 |
| CN201 | **VB390200** | Connector Base Post | PH 6P TE | コネクタベースポスト | | | 01 |
| D0101 | **VB493900** | Diode | MA221 | ダイオード | | | 01 |
| -0113 | **VB493900** | Diode | MA221 | ダイオード | | | 01 |
| D0201 | **VB493900** | Diode | MA221 | ダイオード | | | 01 |
| -0207 | **VB493900** | Diode | MA221 | ダイオード | | | 01 |
| SW101 | **V7446600** | Tact Switch | EVQQWS03W | タクトSW | MENU(DEMO) | | 01 |
| SW102 | **V7446600** | Tact Switch | EVQQWS03W | タクトSW | MENU(HELP) | | 01 |
| SW103 | **V7446600** | Tact Switch | EVQQWS03W | タクトSW | MENU(FUNCTION) | | 01 |
| SW104 | **V7446600** | Tact Switch | EVQQWS03W | タクトSW | D. STUDIO(SOUND CREATOR) | | 01 |
| SW105 | **V7446600** | Tact Switch | EVQQWS03W | タクトSW | D. STUDIO(DIGITAL REC.) | | 01 |
| SW106 | **V7446600** | Tact Switch | EVQQWS03W | タクトSW | D. STUDIO(MIXING CONSOLE) | | 01 |
| SW107 | **V7446600** | Tact Switch | EVQQWS03W | タクトSW | LCD select (A) | | 01 |
| SW108 | **V7446600** | Tact Switch | EVQQWS03W | タクトSW | LCD select (B) | | 01 |
| SW109 | **V7446600** | Tact Switch | EVQQWS03W | タクトSW | LCD select (C) | | 01 |
| SW110 | **V7446600** | Tact Switch | EVQQWS03W | タクトSW | LCD select (D) | | 01 |
| SW111 | **V7446600** | Tact Switch | EVQQWS03W | タクトSW | LCD select (E) | | 01 |
| SW112 | **V7446600** | Tact Switch | EVQQWS03W | タクトSW | BALANCE | | 01 |
| SW113 | **V7446600** | Tact Switch | EVQQWS03W | タクトSW | CHANNEL ON/OFF | | 01 |
| SW201 | **V7446600** | Tact Switch | EVQQWS03W | タクトSW | BACK | | 01 |
| SW202 | **V7446600** | Tact Switch | EVQQWS03W | タクトSW | NEXT | | 01 |
| SW203 | **V7446600** | Tact Switch | EVQQWS03W | タクトSW | LCD select (F) | | 01 |

∗: New Parts

RANK: Japan only

| REF NO. | PART NO. | DESCRIPTION | | 部品名 | REMARKS | QTY | RANK |
|---|---|---|---|---|---|---|---|
| SW204 | **V7446600** | Tact Switch | EVQQWS03W | タクトSW | LCD select (G) | | 01 |
| SW205 | **V7446600** | Tact Switch | EVQQWS03W | タクトSW | LCD select (H) | | 01 |
| SW206 | **V7446600** | Tact Switch | EVQQWS03W | タクトSW | LCD select (I) | | 01 |
| SW207 | **V7446600** | Tact Switch | EVQQWS03W | タクトSW | LCD select (J) | | 01 |
| | | | | | | | |
| | **V7135200** | Circuit Board | PNR(PNR,ENC) | PNRシート | (XZ882E0) | | 18 |
| C0001 | **US064100** | Ceramic Capacitor-B (chip) | 0.0100 50V K | チップセラ(B) | | | 01 |
| C0002 | **VS490700** | Electrolytic Cap. | 47.0 16.0V | ケミコン 5L | | | 01 |
| C0003 | **VS490700** | Electrolytic Cap. | 47.0 16.0V | ケミコン 5L | | | 01 |
| C0004 | **US064100** | Ceramic Capacitor-B (chip) | 0.0100 50V K | チップセラ(B) | | | 01 |
| C0005 | **US063100** | Ceramic Capacitor-B (chip) | 1000P 50V K | チップセラ(B) | | | 01 |
| C0006 | **VS490700** | Electrolytic Cap. | 47.0 16.0V | ケミコン 5L | | | 01 |
| C0007 | **US064100** | Ceramic Capacitor-B (chip) | 0.0100 50V K | チップセラ(B) | | | 01 |
| -0009 | **US064100** | Ceramic Capacitor-B (chip) | 0.0100 50V K | チップセラ(B) | | | 01 |
| C0010 | **VS490700** | Electrolytic Cap. | 47.0 16.0V | ケミコン 5L | | | 01 |
| C0011 | **VS490700** | Electrolytic Cap. | 47.0 16.0V | ケミコン 5L | | | 01 |
| CN001 | **VB389600** | Connector Base Post | PH 11P SE | コネクタベースポスト | | | 01 |
| CN002 | **VB858900** | Connector Base Post | PH 10P SE | コネクタベースポスト | | | 01 |
| CN003 | **VB858700** | Connector Base Post | PH 8P SE | コネクタベースポスト | | | 01 |
| CN004 | **VC166500** | Connector Base Post | PH 12P SE | コネクタベースポスト | | | 01 |
| CN005 | **VB858500** | Connector Base Post | PH 6P SE | コネクタベースポスト | | | 01 |
| CN006 | **VK015400** | Connector Base Post | PH 13P SE | コネクタベースポスト | | | 01 |
| D0001 | **VB493900** | Diode | MA221 | ダイオード | | | 01 |
| -0038 | **VB493900** | Diode | MA221 | ダイオード | | | 01 |
| EC001 | **VU481300** | Encoder | REB161 PVB 15F | 16形エンコーダ | DATA ENTRY | | 03 |
| IC001 | **XS711200** | IC | MN101C027YB | IC | CPU | | 06 |
| LD001 | **VZ460300** | Photo Diode | SELU6814CTP5 | 発光ダイオード | VOICE PART ON/OFF(LAYER) | | 02 |
| LD002 | **VZ460300** | Photo Diode | SELU6814CTP5 | 発光ダイオード | VOICE PART ON/OFF(LEFT) | | 02 |
| LD003 | **V7767400** | LED Red | SLZ-981B-09-T1 | LED | VOICE EFFECT(REVERB) | | 01 |
| LD004 | **V7767400** | LED Red | SLZ-981B-09-T1 | LED | VOICE(PIANO&HARPSI.) | | 01 |
| LD005 | **V7767400** | LED Red | SLZ-981B-09-T1 | LED | VOICE(BRASS) | | 01 |
| LD006 | **V7767400** | LED Red | SLZ-981B-09-T1 | LED | PIANO | | 01 |
| LD007 | **V7767400** | LED Red | SLZ-981B-09-T1 | LED | VOICE EFFECT(DSP) | | 01 |
| LD008 | **V7767400** | LED Red | SLZ-981B-09-T1 | LED | VOICE(E.PIANO) | | 01 |
| LD009 | **V7767400** | LED Red | SLZ-981B-09-T1 | LED | VOICE(WOODWIND) | | 01 |
| LD010 | **V7767400** | LED Red | SLZ-981B-09-T1 | LED | REGIST. MEMORY(FREEZE) | | 01 |
| LD011 | **V7481600** | LED Green/Red | GL3ED403B0V | 2色LED | REGISTRATION MEMORY(1) | | 01 |
| LD012 | **V7767400** | LED Red | SLZ-981B-09-T1 | LED | VOICE EFFECT(VARIATION) | | 01 |
| LD013 | **V7767400** | LED Red | SLZ-981B-09-T1 | LED | VOICE(ORGAN&ACCORDION) | | 01 |
| LD014 | **V7767400** | LED Red | SLZ-981B-09-T1 | LED | VOICE(STRINGS) | | 01 |
| LD015 | **V7481600** | LED Green/Red | GL3ED403B0V | 2色LED | ONE TOUCH SETTING(1) | | 01 |
| LD016 | **V7481600** | LED Green/Red | GL3ED403B0V | 2色LED | REGISTRATION MEMORY(2) | | 01 |
| LD017 | **V7767400** | LED Red | SLZ-981B-09-T1 | LED | VOICE EFFECT(HARMONY/ECHO | | 01 |
| LD018 | **V7767400** | LED Red | SLZ-981B-09-T1 | LED | VOICE(PERCUSSION) | | 01 |
| LD019 | **V7767400** | LED Red | SLZ-981B-09-T1 | LED | VOICE(CHOIR&PAD) | | 01 |
| LD020 | **V7481600** | LED Green/Red | GL3ED403B0V | 2色LED | ONE TOUCH SETTING(2) | | 01 |
| LD021 | **V7481600** | LED Green/Red | GL3ED403B0V | 2色LED | REGISTRATION MEMORY(3) | | 01 |
| LD022 | **V7481600** | LED Green/Red | GL3ED403B0V | 2色LED | REGISTRATION MEMORY(4) | | 01 |
| LD023 | **V7767400** | LED Red | SLZ-981B-09-T1 | LED | VOICE EFFECT(MONO) | | 01 |
| LD024 | **V7767400** | LED Red | SLZ-981B-09-T1 | LED | VOICE(GUITAR) | | 01 |
| LD025 | **V7767400** | LED Red | SLZ-981B-09-T1 | LED | VOICE(SYNTH.) | | 01 |
| LD026 | **V7481600** | LED Green/Red | GL3ED403B0V | 2色LED | ONE TOUCH SETTING(3) | | 01 |
| LD027 | **V7481600** | LED Green/Red | GL3ED403B0V | 2色LED | REGISTRATION MEMORY(5) | | 01 |
| LD028 | **V7481600** | LED Green/Red | GL3ED403B0V | 2色LED | REGISTRATION MEMORY(6) | | 01 |
| LD029 | **V7767400** | LED Red | SLZ-981B-09-T1 | LED | VOICE EFFECT(LEFT HOLD) | | 01 |
| LD030 | **V7767400** | LED Red | SLZ-981B-09-T1 | LED | VOICE(BASS) | | 01 |
| LD031 | **V7767400** | LED Red | SLZ-981B-09-T1 | LED | VOICE(XG) | | 01 |
| LD032 | **V7481600** | LED Green/Red | GL3ED403B0V | 2色LED | ONE TOUCH SETTING(4) | | 01 |
| LD033 | **V7481600** | LED Green/Red | GL3ED403B0V | 2色LED | REGISTRATION MEMORY(7) | | 01 |
| LD034 | **V7481600** | LED Green/Red | GL3ED403B0V | 2色LED | REGISTRATION MEMORY(8) | | 01 |
| LD035 | **V7767400** | LED Red | SLZ-981B-09-T1 | LED | VOICE(USER) | | 01 |
| R0001 | **RD350000** | Carbon Resistor (chip) | 0 63M J | チップ抵抗 | | | 01 |
| R0002 | **RD357220** | Carbon Resistor (chip) | 22.0K 63M J | チップ抵抗 | | | 01 |
| R0003 | **RD356100** | Carbon Resistor (chip) | 1.0K 63M J | チップ抵抗 | | | 01 |
| R0004 | **RD154820** | Carbon Resistor (chip) | 82.0 1/4 J | チップ抵抗 | | | 01 |
| -0011 | **RD154820** | Carbon Resistor (chip) | 82.0 1/4 J | チップ抵抗 | | | 01 |
| R0012 | **RD154560** | Carbon Resistor (chip) | 56.0 1/4 J | チップ抵抗 | | | 01 |
| -0019 | **RD154560** | Carbon Resistor (chip) | 56.0 1/4 J | チップ抵抗 | | | 01 |
| R0020 | **RD154470** | Carbon Resistor (chip) | 47.0 1/4 J | チップ抵抗 | | | 01 |
| -0024 | **RD154470** | Carbon Resistor (chip) | 47.0 1/4 J | チップ抵抗 | | | 01 |

∗: New Parts

RANK: Japan only

| REF NO. | PART NO. | DESCRIPTION | | 部品名 | REMARKS | QTY | RANK |
|---|---|---|---|---|---|---|---|
| R0025 | **RD154560** | Carbon Resistor (chip) | 56.0 1/4 J | チップ抵抗 | | | 01 |
| -0027 | **RD154560** | Carbon Resistor (chip) | 56.0 1/4 J | チップ抵抗 | | | 01 |
| R0028 | **RD154470** | Carbon Resistor (chip) | 47.0 1/4 J | チップ抵抗 | | | 01 |
| -0031 | **RD154470** | Carbon Resistor (chip) | 47.0 1/4 J | チップ抵抗 | | | 01 |
| R0032 | **RD154820** | Carbon Resistor (chip) | 82.0 1/4 J | チップ抵抗 | | | 01 |
| -0035 | **RD154820** | Carbon Resistor (chip) | 82.0 1/4 J | チップ抵抗 | | | 01 |
| R0036 | **RD357100** | Carbon Resistor (chip) | 10.0K 63M J | チップ抵抗 | | | 01 |
| -0049 | **RD357100** | Carbon Resistor (chip) | 10.0K 63M J | チップ抵抗 | | | 01 |
| SW001 | **V7446500** | Tact Switch | SKQNADD010 | タクトSW | VOICE PART ON/OFF(LAYER) | | 01 |
| SW002 | **V7446500** | Tact Switch | SKQNADD010 | タクトSW | VOICE PART ON/OFF(LEFT) | | 01 |
| SW003 | **VV439800** | Tact Switch | SKQNAJ | タクトSW | ENTER | | 01 |
| SW004 | **VV439800** | Tact Switch | SKQNAJ | タクトSW | VOICE EFFECT(REVERB) | | 01 |
| SW005 | **VV439800** | Tact Switch | SKQNAJ | タクトSW | VOICE(PIANO&HARPSI.) | | 01 |
| SW006 | **VV439800** | Tact Switch | SKQNAJ | タクトSW | VOICE(BRASS) | | 01 |
| SW007 | **VV439800** | Tact Switch | SKQNAJ | タクトSW | MUSIC FINDER | | 01 |
| SW008 | **VV439800** | Tact Switch | SKQNAJ | タクトSW | PIANO | | 01 |
| SW009 | **VV439800** | Tact Switch | SKQNAJ | タクトSW | VOICE EFFECT(DSP) | | 01 |
| SW010 | **VV439800** | Tact Switch | SKQNAJ | タクトSW | VOICE(E.PIANO) | | 01 |
| SW011 | **VV439800** | Tact Switch | SKQNAJ | タクトSW | VOICE(WOODWIND) | | 01 |
| SW012 | **VV439800** | Tact Switch | SKQNAJ | タクトSW | REGIST. MEMORY(FREEZE) | | 01 |
| SW013 | **VV439800** | Tact Switch | SKQNAJ | タクトSW | REGISTRATION MEMORY(1) | | 01 |
| SW014 | **VV439800** | Tact Switch | SKQNAJ | タクトSW | VOICE EFFECT(VARIATION) | | 01 |
| SW015 | **VV439800** | Tact Switch | SKQNAJ | タクトSW | VOICE(ORGAN&ACCORDION) | | 01 |
| SW016 | **VV439800** | Tact Switch | SKQNAJ | タクトSW | VOICE(STRINGS) | | 01 |
| SW017 | **VV439800** | Tact Switch | SKQNAJ | タクトSW | ONE TOUCH SETTING(1) | | 01 |
| SW018 | **VV439800** | Tact Switch | SKQNAJ | タクトSW | REGISTRATION MEMORY(2) | | 01 |
| SW019 | **VV439800** | Tact Switch | SKQNAJ | タクトSW | VOICE EFFECT(HARMONY/ECHO | | 01 |
| SW020 | **VV439800** | Tact Switch | SKQNAJ | タクトSW | VOICE(PERCUSSION) | | 01 |
| SW021 | **VV439800** | Tact Switch | SKQNAJ | タクトSW | VOICE(CHOIR&PAD) | | 01 |
| SW022 | **VV439800** | Tact Switch | SKQNAJ | タクトSW | ONE TOUCH SETTING(2) | | 01 |
| SW023 | **VV439800** | Tact Switch | SKQNAJ | タクトSW | REGISTRATION MEMORY(3) | | 01 |
| SW024 | **VV439800** | Tact Switch | SKQNAJ | タクトSW | REGISTRATION MEMORY(4) | | 01 |
| SW025 | **VV439800** | Tact Switch | SKQNAJ | タクトSW | VOICE EFFECT(MONO) | | 01 |
| SW026 | **VV439800** | Tact Switch | SKQNAJ | タクトSW | VOICE(GUITAR) | | 01 |
| SW027 | **VV439800** | Tact Switch | SKQNAJ | タクトSW | VOICE(SYNTH.) | | 01 |
| SW028 | **VV439800** | Tact Switch | SKQNAJ | タクトSW | ONE TOUCH SETTING(3) | | 01 |
| SW029 | **VV439800** | Tact Switch | SKQNAJ | タクトSW | REGISTRATION MEMORY(5) | | 01 |
| SW030 | **VV439800** | Tact Switch | SKQNAJ | タクトSW | REGISTRATION MEMORY(6) | | 01 |
| SW031 | **VV439800** | Tact Switch | SKQNAJ | タクトSW | VOICE EFFECT(LEFT HOLD) | | 01 |
| SW032 | **VV439800** | Tact Switch | SKQNAJ | タクトSW | VOICE(BASS) | | 01 |
| SW033 | **VV439800** | Tact Switch | SKQNAJ | タクトSW | VOICE(XG) | | 01 |
| SW034 | **VV439800** | Tact Switch | SKQNAJ | タクトSW | ONE TOUCH SETTING(4) | | 01 |
| SW035 | **VV439800** | Tact Switch | SKQNAJ | タクトSW | REGISTRATION MEMORY(7) | | 01 |
| SW036 | **VV439800** | Tact Switch | SKQNAJ | タクトSW | REGISTRATION MEMORY(8) | | 01 |
| SW037 | **VV439800** | Tact Switch | SKQNAJ | タクトSW | VOICE(USER) | | 01 |
| SW038 | **VV439800** | Tact Switch | SKQNAJ | タクトSW | REGIST. MEMORY(MEMORY) | | 01 |
| TA001 | **VT943400** | Transistor Array | TD62785F(TP1) | トランジスタアレイ | | | 04 |
| TA001 | **V8566600** | Transistor Array | TD62785F(EL) | トランジスタアレイ | | | |
| TA002 | **VQ248500** | Transistor Array | TD62381F | トランジスタアレイ | | | 04 |
| TA002 | **V7723400** | Transistor Array | TD62381F(EL) | トランジスタアレイ | | | 04 |
| TA003 | **VQ248500** | Transistor Array | TD62381F | トランジスタアレイ | | | 04 |
| TA003 | **V7723400** | Transistor Array | TD62381F(EL) | トランジスタアレイ | | | 04 |
| TR001 | **VY677700** | Digital Transistor | DTB123YK T146 | デジタルトランジスタ | | | 01 |
| TR002 | **VY677700** | Digital Transistor | DTB123YK T146 | デジタルトランジスタ | | | 01 |
| TR003 | **VY677600** | Digital Transistor | DTC123JKA TP | デジタルトランジスタ | | | 01 |
| -006 | **VY677600** | Digital Transistor | DTC123JKA TP | デジタルトランジスタ | | | 01 |
| VR001 | **VS368200** | Rotary Variable Resistor | B10K RK09K1130BN7A | ロータリーVR 1連 | LCD CONTRAST | | 01 |
| WH001 | **V7530200** | Connector Assembly | ENC DS 4P | ENC束線 | | | 02 |
| X0001 | **VE222400** | Ceramic Resonator | 8MHz EFO-FC8004A4 | セラミック発振子 | | | 03 |
| | | | | | | | |
| * | **WA455200** | Circuit Board | SWX | SWXシート | (XZ895D0) | | |
| C0001 | **UF017220** | Electrolytic Cap. (chip) | 22 6.3V | チップケミコン | | | 01 |
| C0002 | **UF017220** | Electrolytic Cap. (chip) | 22 6.3V | チップケミコン | | | 01 |
| C0003 | **US064100** | Ceramic Capacitor-B (chip) | 0.0100 50V K | チップセラ(B) | | | 01 |
| C0004 | **US064100** | Ceramic Capacitor-B (chip) | 0.0100 50V K | チップセラ(B) | | | 01 |
| C0010 | **US064100** | Ceramic Capacitor-B (chip) | 0.0100 50V K | チップセラ(B) | | | 01 |
| -0040 | **US064100** | Ceramic Capacitor-B (chip) | 0.0100 50V K | チップセラ(B) | | | 01 |
| CN001 | **VU341400** | Straight Connector | HIF3FB-26DA-2.54DS | ストレートコネクター | | | 03 |
| IC001 | **XU947C00** | IC | HG73C205AFD | IC | SWX00B | | 09 |
| IC002 | **XU947C00** | IC | HG73C205AFD | IC | SWX00B | | 09 |

*: New Parts

RANK: Japan only

| | REF NO. | PART NO. | DESCRIPTION | | 部品名 | REMARKS | QTY | RANK |
|---|---|---|---|---|---|---|---|---|
| | IC004 | **XR115A00** | IC | UPD43256BGU-70L | IC | SRAM 256K | | 08 |
| | IC004 | **XW433A00** | IC | CY62256LL-70SNCT | IC | | | 05 |
| | IC004 | **XZ388A00** | IC | W24257S-70LL-EL10 | IC | | | 05 |
| | IC006 | **XU462B00** | IC | MSM514260E-60TS-K | IC | DRAM 4M | | 07 |
| * | IC007 | **X3765100** | IC | | IC | MASK ROM 128M WAVEKB(1) | | |
| * | IC008 | **X3766100** | IC | | IC | MASK ROM 128M WAVEKB(2) | | |
| | IC009 | **XS775A00** | IC | TC7SH04FU | IC | INVERTER | | 01 |
| * | IC013 | **X3747B00** | IC | E28F320J3A110 | IC | FLASH ROM 32M SWX MAIN | | |
| | R0001 | **RD350000** | Carbon Resistor (chip) | 0 63M J | チップ抵抗 | | | 01 |
| | R0003 | **RD350000** | Carbon Resistor (chip) | 0 63M J | チップ抵抗 | | | 01 |
| | R0008 | **RD357100** | Carbon Resistor (chip) | 10.0K 63M J | チップ抵抗 | | | 01 |
| | R0009 | **RD350000** | Carbon Resistor (chip) | 0 63M J | チップ抵抗 | | | 01 |
| | R0010 | **RD355100** | Carbon Resistor (chip) | 100.0 63M J | チップ抵抗 | | | 01 |
| | -0076 | **RD355100** | Carbon Resistor (chip) | 100.0 63M J | チップ抵抗 | | | 01 |
| | R0078 | **RD350000** | Carbon Resistor (chip) | 0 63M J | チップ抵抗 | | | 01 |
| | R0080 | **RD357100** | Carbon Resistor (chip) | 10.0K 63M J | チップ抵抗 | | | 01 |
| | -0086 | **RD357100** | Carbon Resistor (chip) | 10.0K 63M J | チップ抵抗 | | | 01 |
| | | | | | | | | |
| ⚠ | | **XQ429A00** | Power Transformer | GA-60J | 電源トランス | J | | 12 |
| ⚠ | | **XQ429B00** | Power Transformer | GA-60J | 電源トランス | J | | 12 |
| ⚠ | | **XQ430C00** | Power Transformer | 29WP243 UL/CSA | 電源トランス | U | | 11 |
| ⚠ | | **XQ431B00** | Power Transformer | GA-60 E EN60065 | 電源トランス | B,E,K | | 12 |
| ⚠ | | **XQ432A00** | Power Transformer | GA-60 N | 電源トランス | N | | 14 |
| ⚠ | | **XQ432B00** | Power Transformer | GA-60 N | 電源トランス | N | | 14 |
| ⚠ | | **XQ432C00** | Power Transformer | IEC65 GA-60 N | 電源トランス | N | | |
| | | | | | | | | |
| | | **V3331300** | LCD | EDMMPU3BCF | 液晶ディスプレイ | | | 23 |
| | | | | | | | | |
| ⚠ | | **VC843500** | Push Switch | SDDLB1216A J.U.C.S | プッシュSW | POWER ON/OFF | | 03 |
| | | | | | | | | |
| | | **V6492300** | Floppy Disk Drive | ALPS DF354H | 3.5"FDD | | | 13 |
| | | | | | | | | |
| | | **XC292A00** | Speaker | 5.0cm 8 ohm 60W | スピーカ | MONITOR | 2 | 07 |
| | | **X0203A00** | Speaker | 16cm 6 ohm 40W | スピーカ | WOOFER | 2 | 09 |

*: New Parts

RANK: Japan only

# ■ CVP-206/CVP-206M/CVP-206C BLOCK DIAGRAM

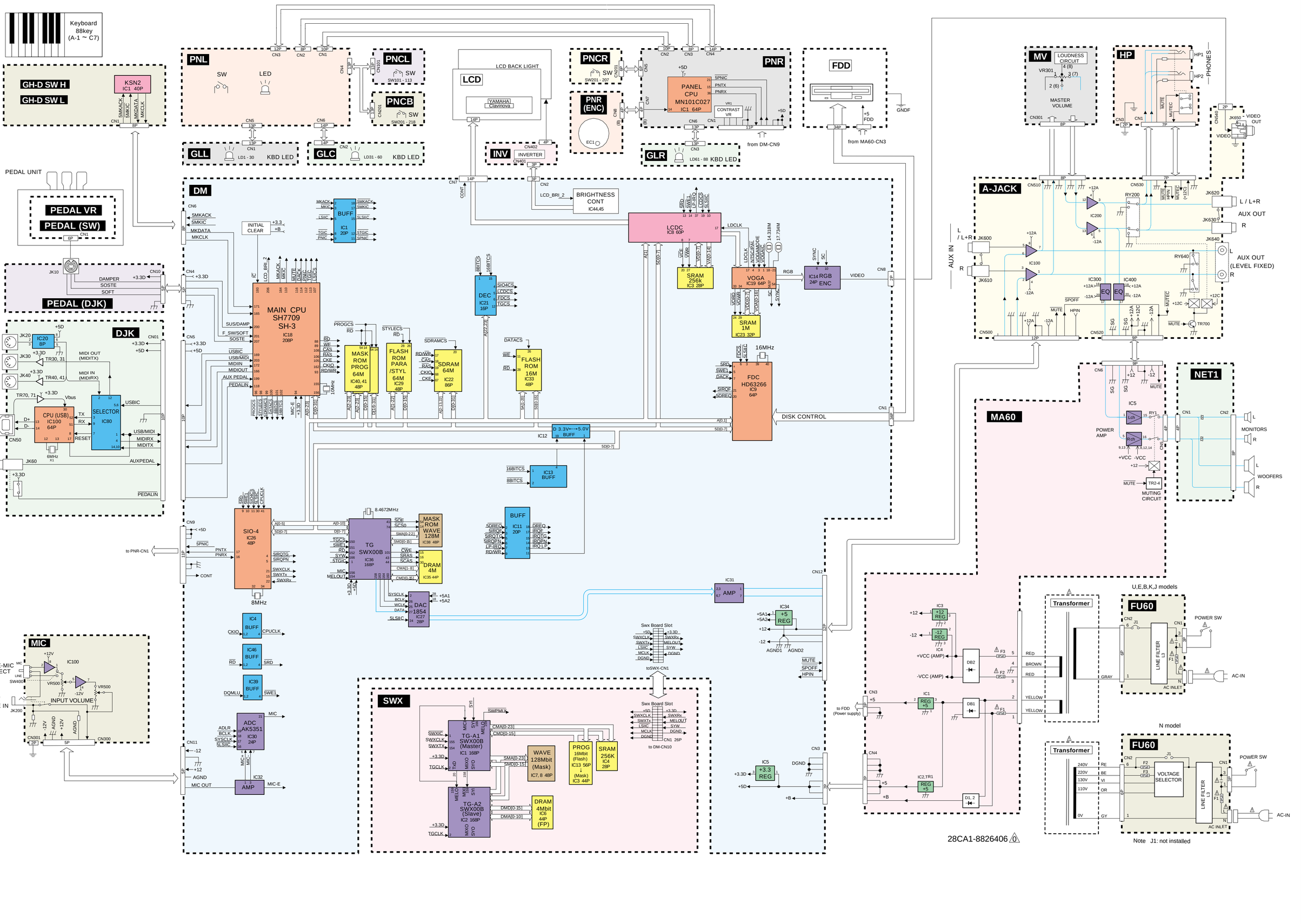


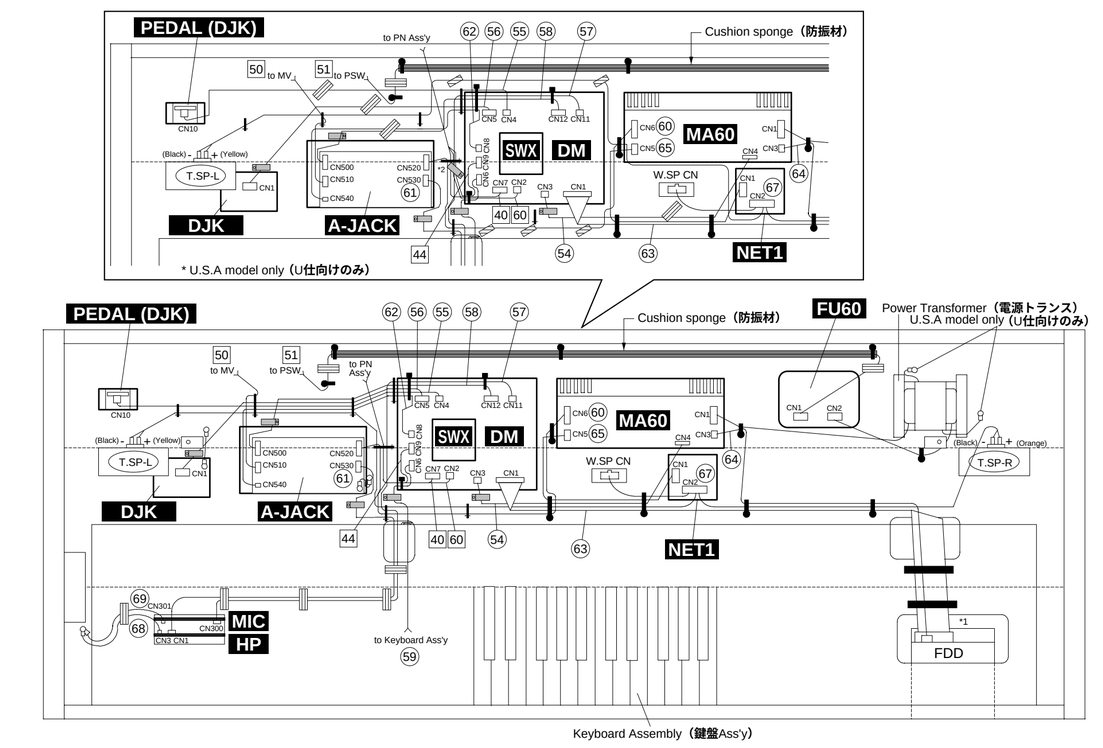


| Location | Part No. | Connector Assembly | Destination | | Remarks |
|---|---|---|---|---|---|
| 54 | (V807500) | +5V-LF | DM-CN3 | MA60-CN4 | 7P-550 |
| 55 | (VK11350) | KRD-KRD | DM-CN4 | PEDAL (DJK)-CN10 | 5P-550 |
| 56 | (V810190) | DM-DJACK | DM-CN5 | DJK-CN1 | 10P-600 |
| 57 | (VK12250) | KRD-KRD | DM-CN11 | MIC-CN300 | 5P-850 |
| 58 | (V810170) | DM-AJACK | DM-CN12 | A-JACK-CN500 | 12P-600 |
| 59 | V7565100 | MK-LF | DM-CN6 | GH-D SW L-CN1 | 8P-500 |
| 60 | (VK11390) | KRD-KRD | A-JACK-CN520 | MA60-CN6 | 9P-550 |
| 61 | (V810180) | HP-AJACK | HP-CN1 | A-JACK-CN530 | 7P-500 |
| 62 | V7530800 | V-OUT | A-JACK-CN540 | DM-CN8 | 2P |
| 63 | V7530900 | FDD-SIG | DM-CN1 | FDD | 34P FLAT |
| 64 | V4269800 | FDD POWER | MA60-CN3 | FDD (Power Supply) | 3P L=530 |
| 65 | (V753110) | PU-NW | MA60-CN5 | NET1-CN1 | 4P-400 |
| 67 | (V753140) | T-SP | NET1-CN2 | Tweeter Speaker L/R, Woofer Speaker Connector | 8P |
| 68 | (VL50740) | HP | HP-CN3 | Keybed (GND) | 2P |
| 69 | (V340590) | MIC | MIC-CN301 | Keybed (GND) | 2P |
| 44 | (V801150) | PND-LF | PNR-CN1 | DM-CN9 | 11P-850 |
| 50 | (V222620) | VOL | MV-CN301 | A-JACK-CN510 | 8P L=400 |
| 51 | (V753040) | PSW | PSW | FU60-CN1 | 3P-1400 |
| 40 | (V801140) | LCD-LF | LCD | DM-CN7 | 14P-450 |
| 60 | (V753050) | BACK LIGHT | INV-CN401 | DM-CN2 | 3P-450 |

NOTE1) The parts with "( )" in "Part No." are not available as service parts.

NOTE2) The meaning of symbols.

: Ferrite core　: Lug terminal
: Cable holder　: Insulation lock tie
: Cord binder
: Filament tape

NOTE1) 上記束線のうち、部品No.に"（ ）"がついている部品は、サービス部品として準備されていません。

NOTE2) 記号は下図参照。

：データラインフィルタ　：アースラグ
：束線止め　：インシュロックタイ
：ビニタイ
：粘着テープ

*1) • 63 wire Harness shall be installed with its connector guide looks down.
• 63 and 64 wire Harness shall be installed with slack off as the following drawing.

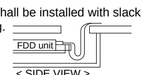


*2) 60 44 wire harness of U.S.A. model shall be around as the following drawing.

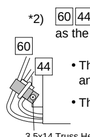


• The 44 wire is wound around ferrite core one time and locked by insulation locktie.
• The 60 wire is through the ferrite core.

3.5x14 Truss Head Tapping Screw-1 (EN630230)

*1) • 束線 63 のガイドは下向きにします。
• 束線 63 64 は下図の様にたるみを持たせて取り付けます。




*2) U仕向けの束線 60 44 は下図のようにします。

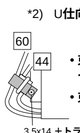


• 束線 44 はフェライトコアに1回巻き付けインシュロックタイで止めます。
• 束線 60 はフェライトコアに通します。

3.5x14 ＋トラスTP1種 (EN630230)

## ■ CVP-206/CVP206M/CVP-206C OVERALL CIRCUIT DIAGRAM 1/3 (DM, SWX, INV)

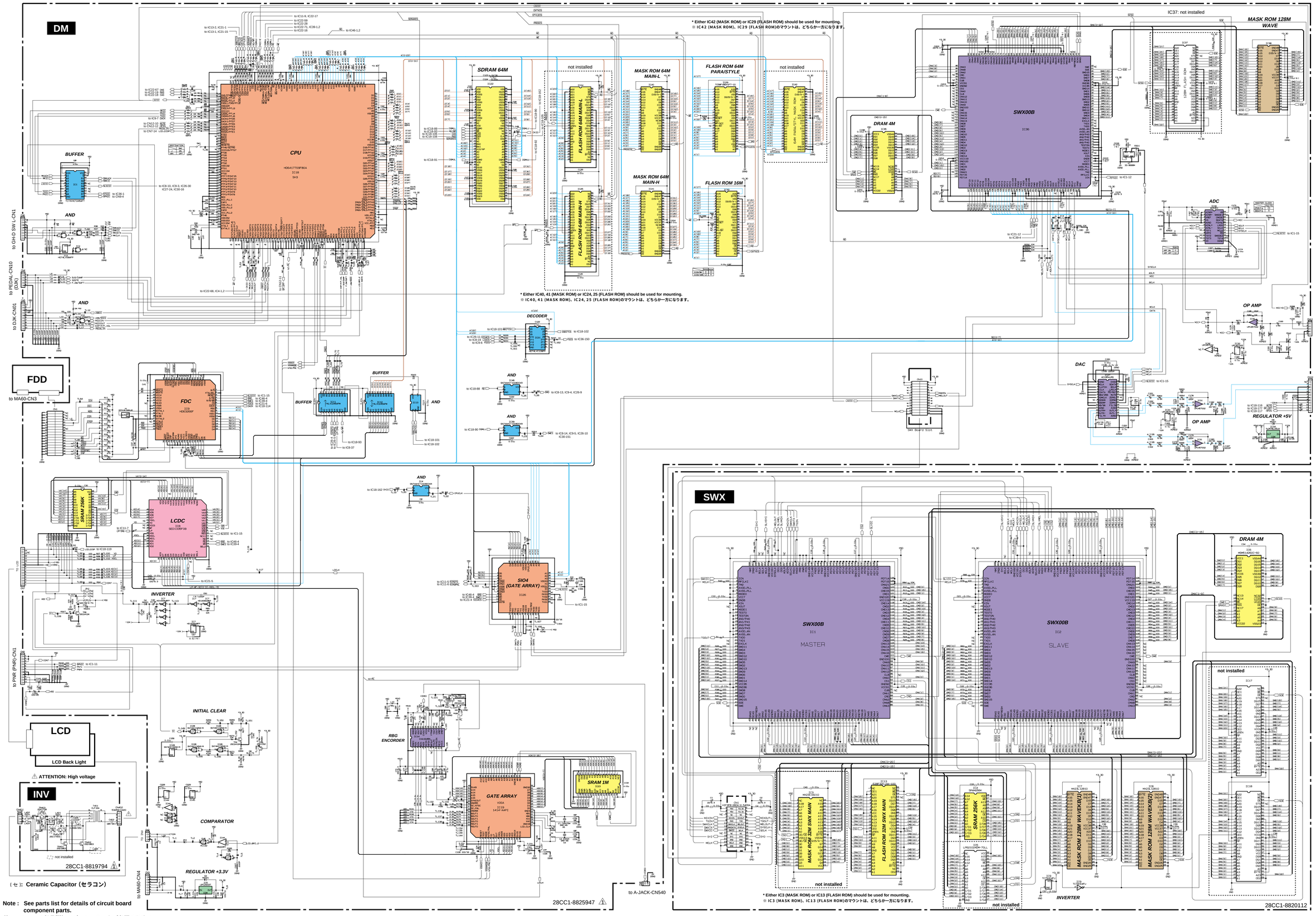


(セ): Ceramic Capacitor (セラコン)

Note : See parts list for details of circuit board component parts.

注： シートの部品詳細はパーツリストをご参照ください。

# ■ CVP-206/CVP206M/CVP-206C OVERALL CIRCUIT DIAGRAM 2/3 (PNL, PNR (PNR, ENC), GLL, GLC, GLR, PNCB, PNCL, PNCR, MIC, GH-D SW H, GH-D SW L)

## PNL

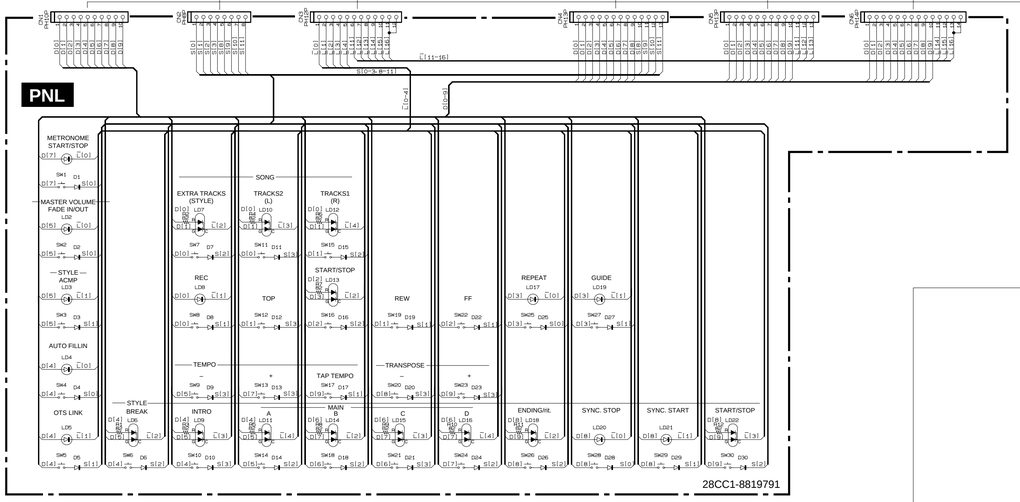


## PNR (PNR)

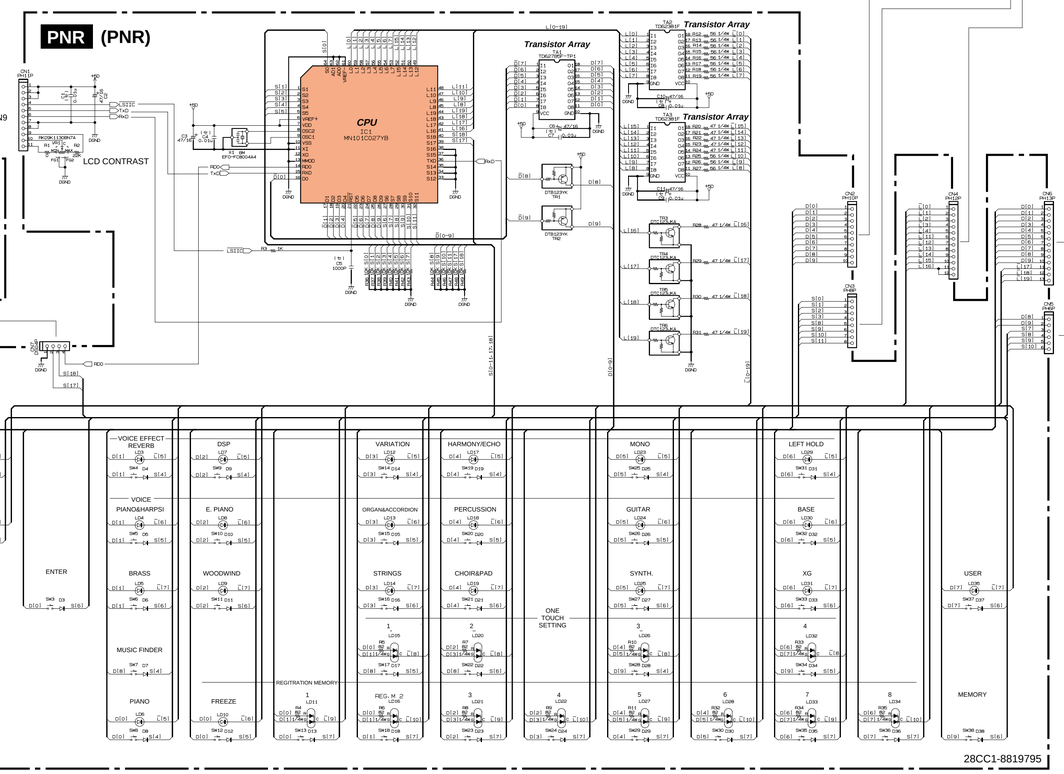


## PNR (ENC)




## PNCR

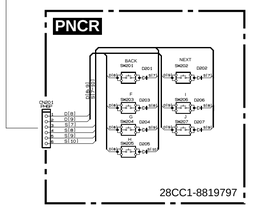


## GLL

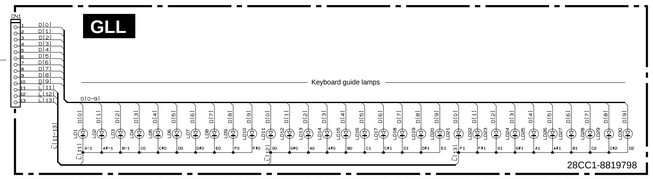


## GLC

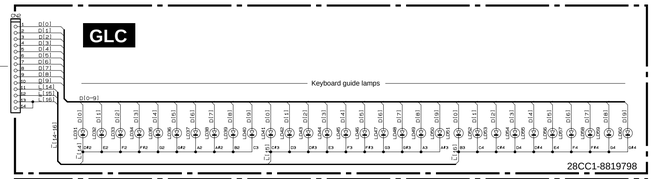


## GLR

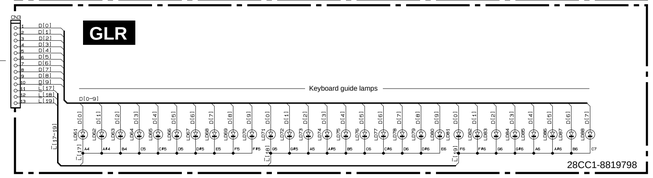


## MIC

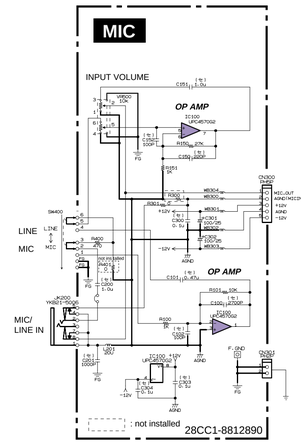


## PNCB

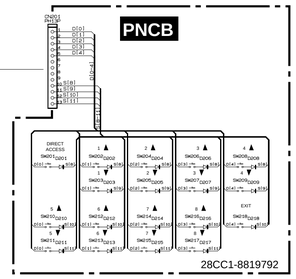


## PNCL

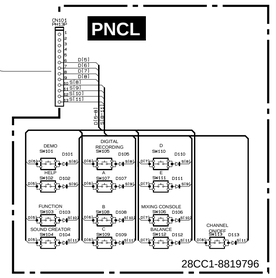


## GH-D SW H

(G2 ~ C7)

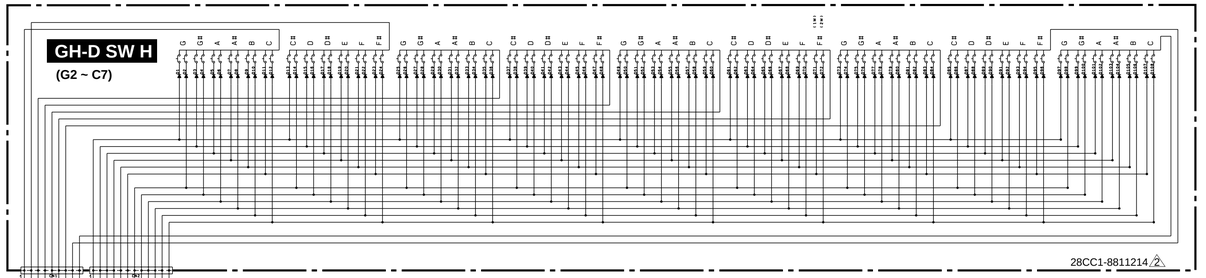


## GH-D SW L

(A-1 ~ F2#)

| | |
|---|---|
| D1 | Not install |
| D2 | Install |
| D3 | Not install |
| D4 | Not install |

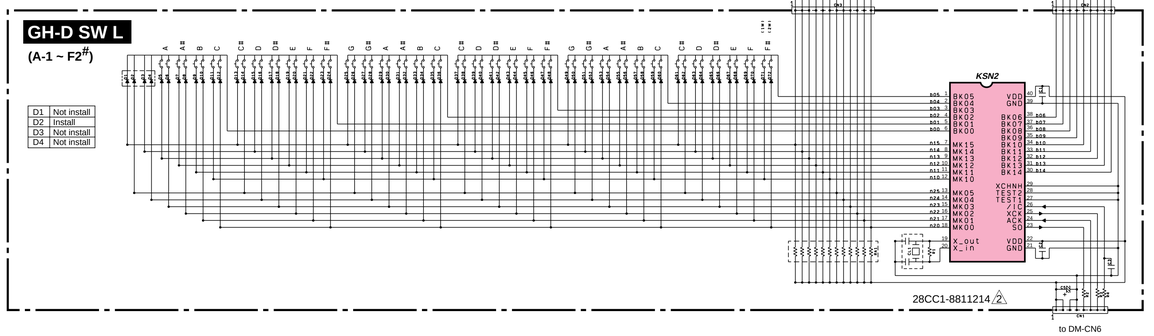


Note : See parts list for details of circuit board component parts.

注： シートの部品詳細はパーツリストをご参照下さい。

# ■ CVP-206/CVP-206M/CVP-206C OVERALL CIRCUIT DIAGRAM 3/3 (DJK, FU60, MA60, A-JACK, HP, MV, NET1, PEDAL (SW), PEDAL VR, PEDAL (DJK))

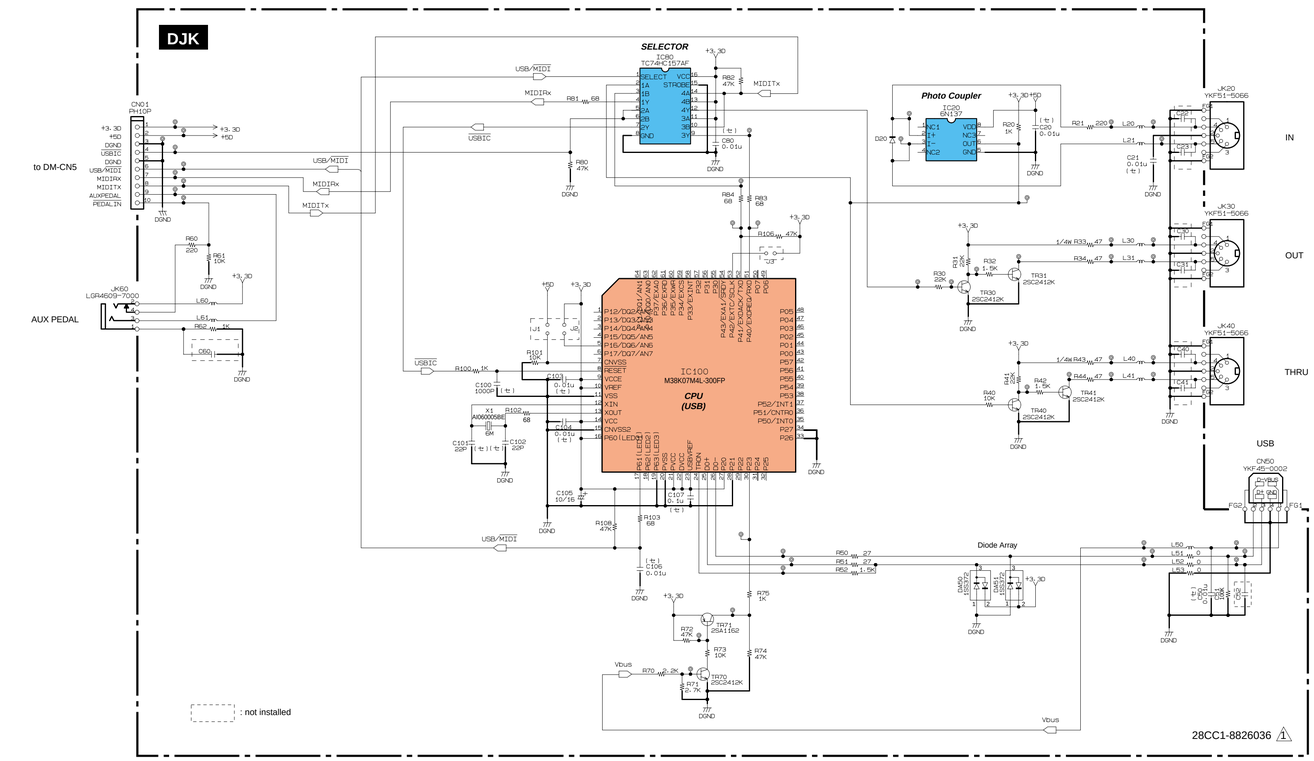


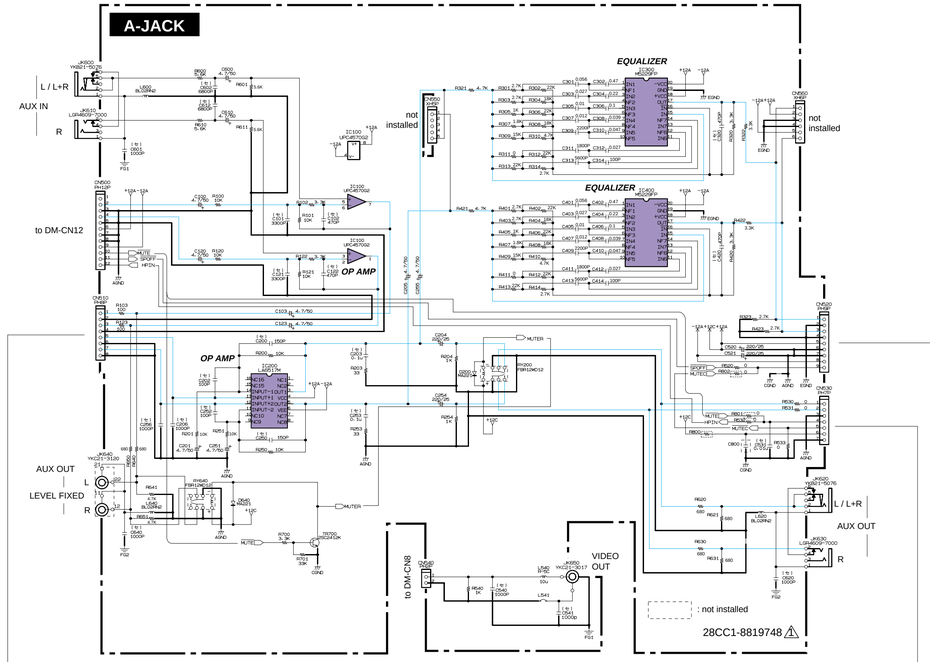


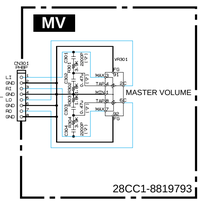


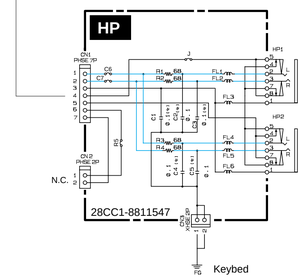


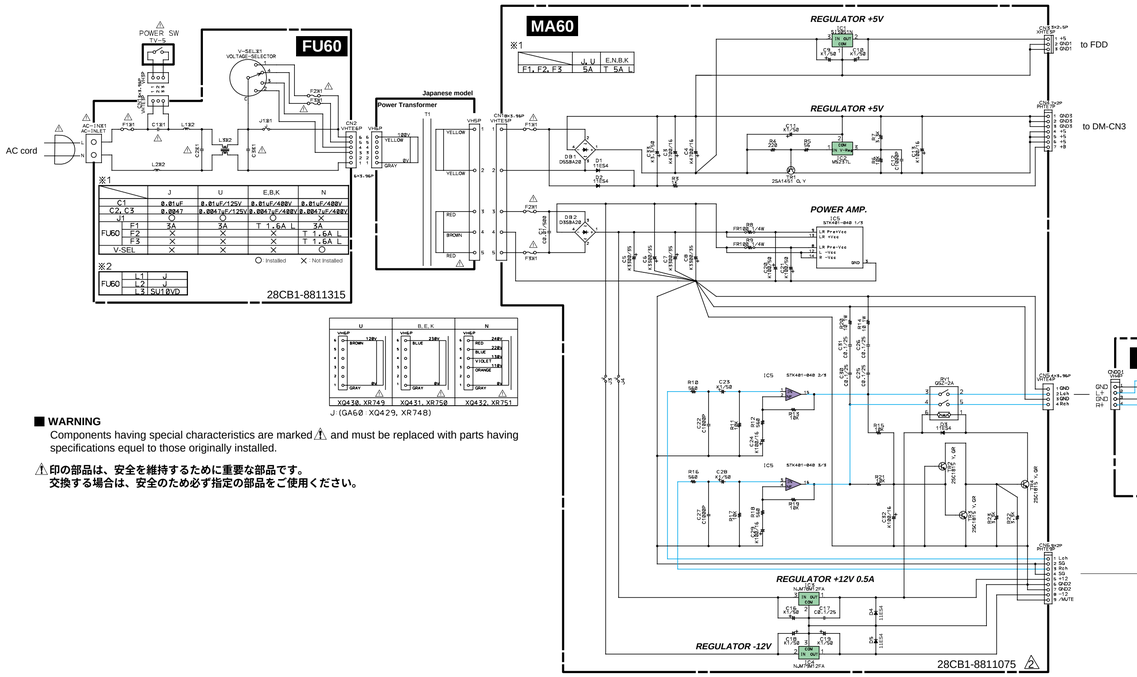





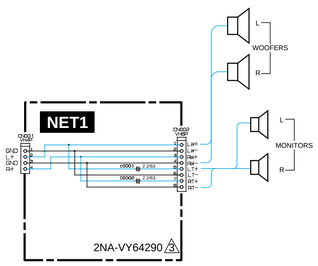


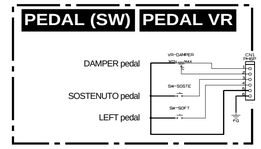


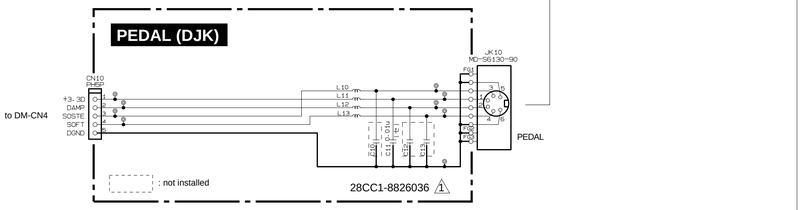


■ **WARNING**
Components having special characteristics are marked ⚠1 and must be replaced with parts having specifications equel to those originally installed.

⚠1 印の部品は、安全を維持するために重要な部品です。
交換する場合は、安全のため必ず指定の部品をご使用ください。

| • 1SS372 (V9424900) DIODE ARRAY | • μPC2933T-E1 (XS516A00) REGULATOR +3.3V | • NJM78L05UA(XJ598A00) REGULATOR +5V | • SI-3051N(XQ437A00) REGULATOR +5V | • M5237L(XQ667A00) REGULATOR +5V | • NJM78M12FA(XJ602A00) REGULATOR +12V | • NJM79M12FA(XD343A00) REGULATOR -12V | • D5SBA20 (VK421800) DIODE STACK 6.0A 200V | • D3SBA20-4103 (VQ111500) DIODE STACK 4.0A | • 1ES4 (VB481900) DIODE |
|---|---|---|---|---|---|---|---|---|---|
| 1: ANODE1<br>2: CATHODE2<br>3: CATHODE1, ANODE2 | 1: V in<br>2: GND<br>3: V out | 1: OUTPUT<br>2: COMMON<br>3: INPUT | 1: GND<br>2: OUTPUT<br>3: INPUT | 1: INPUT<br>2: GND<br>3: VOLTAGE adj | 1: OUTPUT<br>2: COMMON<br>3: INPUT | 1: OUTPUT<br>2: INPUT<br>3: COMMON | | | 1: ANODE<br>2: CATHODE |

**Note : See parts list for details of circuit board component parts**
**注 : シートの部品詳細はパーツリストをご参照ください。**

（セ）: **Ceramic Capacitor（セラミックコンデンサー）**
（マ）: **Mylar Capacitor（マイラーコンデンサー）**


CVP-206/CVP-206M/CVP-206C