PERSONAL ELECTRONIC PIANO

YPP-50

SERVICE MANUAL



■CONTENTS

SPECIFICATIONS 2
PANEL LAYOUT 3
CIRCUIT BOARD LAYOUT & WIRING 4
BLOCK DIAGRAM 6
DISASSEMBLY PROCEDURE 8
LSI DATA TABLE 14
IC BLOCK DIAGRAM 15
CIRCUIT BOARDS 16
TEST PROGRAM 20
MIDI DATA FORMAT 21
MIDI IMPLEMENTATION CHART 22
PARTS LIST

YPP-50

YAMAHA CORP.

HAMAMATSU, JAPAN

SK 001399

2.75K-823 Printed in Japan '89.9

IMPORTANT NOTICE

This manual has been provided for the use of authorized Yamaha Retailers and their service personnel. It has been assumed that basic service procedures inherent to the industry, and more specifically Yamaha Products, are already known and understood by the users, and have therefore not been restated.

WARNING: Failure to follow appropriate service and safety procedures when servicing this product may result in personal injury, destruction of expensive components and failure of the product to perform as specified. For these reasons, we advise all Yamaha product owners that all service required should be performed by an authorized Yamaha Retailer or the appointed service representative.

IMPORTANT: The presentation or sale of this manual to any individual or firm does not constitute authorization, certification, recognition of any applicable technical capabilities, or establish a principle-agent relationship of any form.

The data provided is believed to be accurate and applicable to the unit(s) indicated on the cover. The research, engineering, and service departments of Yamaha are continually striving to improve Yamaha products. Modifications are, therefore, inevitable and changes in specification are subject to change without notice or obligation to retrofit. Should any discrepancy appear to exist, please contact the distributor's Service Division.

WARNING: Static discharges can destroy expensive components. Discharge any static electricity your body may have accumulated by grounding yourself to the ground buss in the unit (heavy gauge black wires connect to this buss).

IMPORTANT: Turn the unit OFF during disassembly and parts replacement. Recheck all work before you apply power to the unit.

■SPECIFICATIONS

KEYBOARD	76 KEYS (E0 ~ G6)
VOICE SELECTORS	PIANO, E.PIANO, HARPSICHORD, VIBES, STRINGS, BRASS, P.ORGAN, BASS
OTHER CONTROLS	MASTER VOLUME, MIDI/TRANSPOSE, METRONOME, TEMPO ▲/▼, PERFORMANCE MEMORY REC/PLAY, DEMO
JACKS/CONNECTORS	HEADPHONES, OPTIONAL IN L/R, OPTIONAL OUT L/R, MIDI IN/OUT, DAMPER
INPUT & OUTPUT LEVEL/IMPEDANCE	OPTIONAL OUT: 600 Ω/1 ~ 4 Vpp OPTIONAL IN: 22 kΩ/ − 10 dBm (for nominal output level)
MAIN AMPLIFIER	10 Watts
SPEAKERS	16 cm (6-2/7") × 2
DIMENSIONS (W × H × D) **WEIGHT**	1157 × 396 × 759 mm (45-6/9" × 15-3/5" × 28-8/9") 23 kg (50-5/7 lbs.)

● Optional Accessories

BC-7 Bench
HPE-5 Stereo Headphones
PCS-3 Connecting Cord

● Output Level

1. Conditions

MASTER VOLUME	maximum
VOICE SELECTOR	PIANO
DAMPER PEDAL	off
TRANSPOSE	After the power switch has been turned on, the TRANSPOSE button should not be pressed.
LEVEL METER	IHF-C

2. OUTPUT level of HEADPHONES and OPTIONAL OUT

When the test program is executed and G0 key is pressed, a sinewave of A3 will be produced, then mesure the output level at HEADPHONES and OPTIONAL OUT jacks.

HEADPHONES:	15±3 dBm
OPTIONAL OUT:	1±3 dBm

If a sinewave of 1kHz, -20dBm is applied to the OPTIONAL IN jack, the output signal shown below is detected at the HEADPHONES jack.

HEADPHONES:	4±3 dBm

● Noise Level

HEADPHONES:	Less than -70dBm
OPTIONAL-OUT:	Less than -90dBm

● Initialization

1. After applying power to the unit, while pressing E0 and F0 keys, press the PEFORMANCE MEMORY REC button to initialize the performance memory data.
2. On the test program mode, pressing the A1 key will initialize the performance memory data. (Refer to TEST PROGRAM.)

PANEL LAYOUT

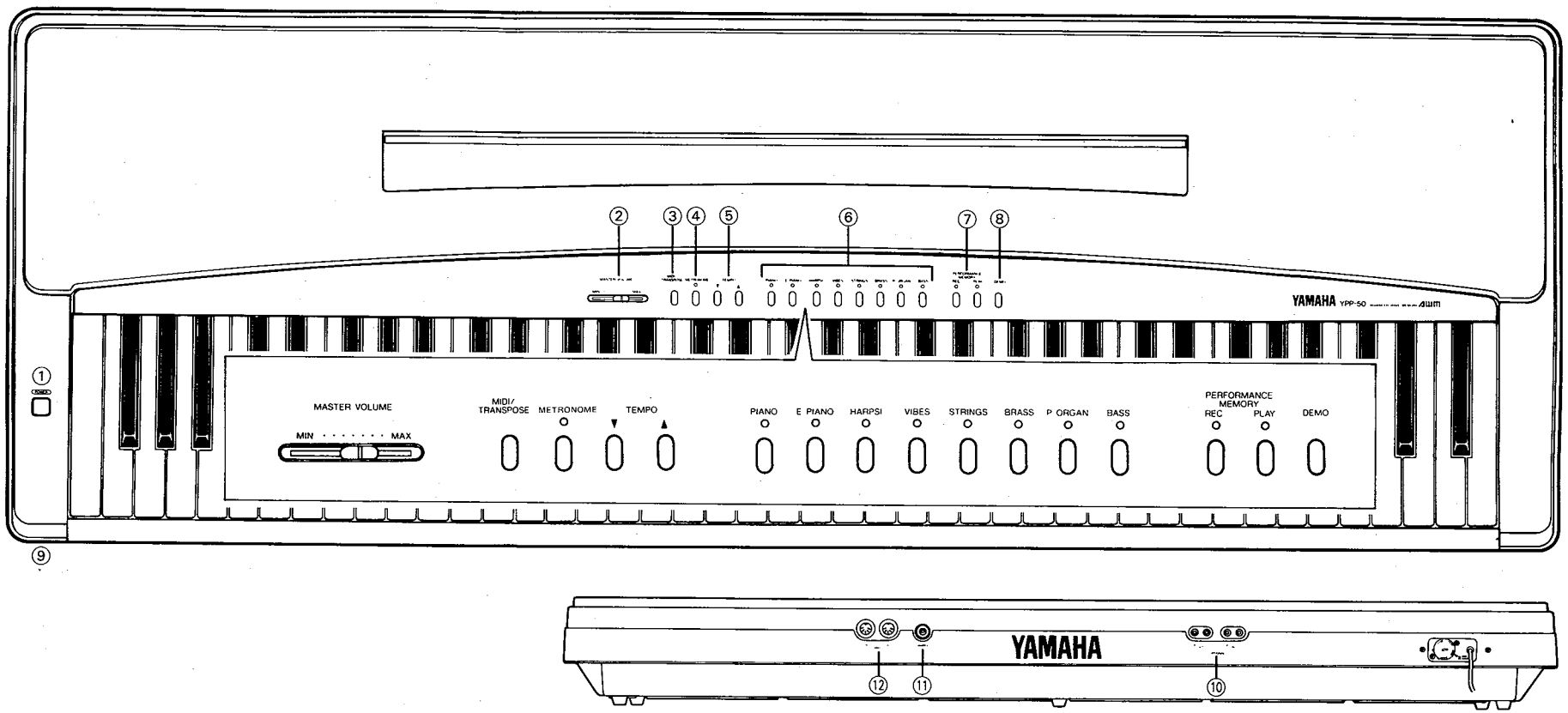

① POWER Switch
② MASTER VOLUME Control
③ MIDI/TRANSPOSE Button
④ METRONOME Button
⑤ TEMPO ▲ and ▼ Buttons
⑥ Voice Selectors
⑦ PERFORMANCE MEMORY REC and PLAY Buttons
⑧ DEMO Button
⑨ HEADPHONE Jack
⑩ OPTIONAL IN L/R and OUT L/R Jacks
⑪ DAMPER Jack
⑫ MIDI IN and OUT Connectors

■CIRCUIT BOARD LAYOUT & WIRING

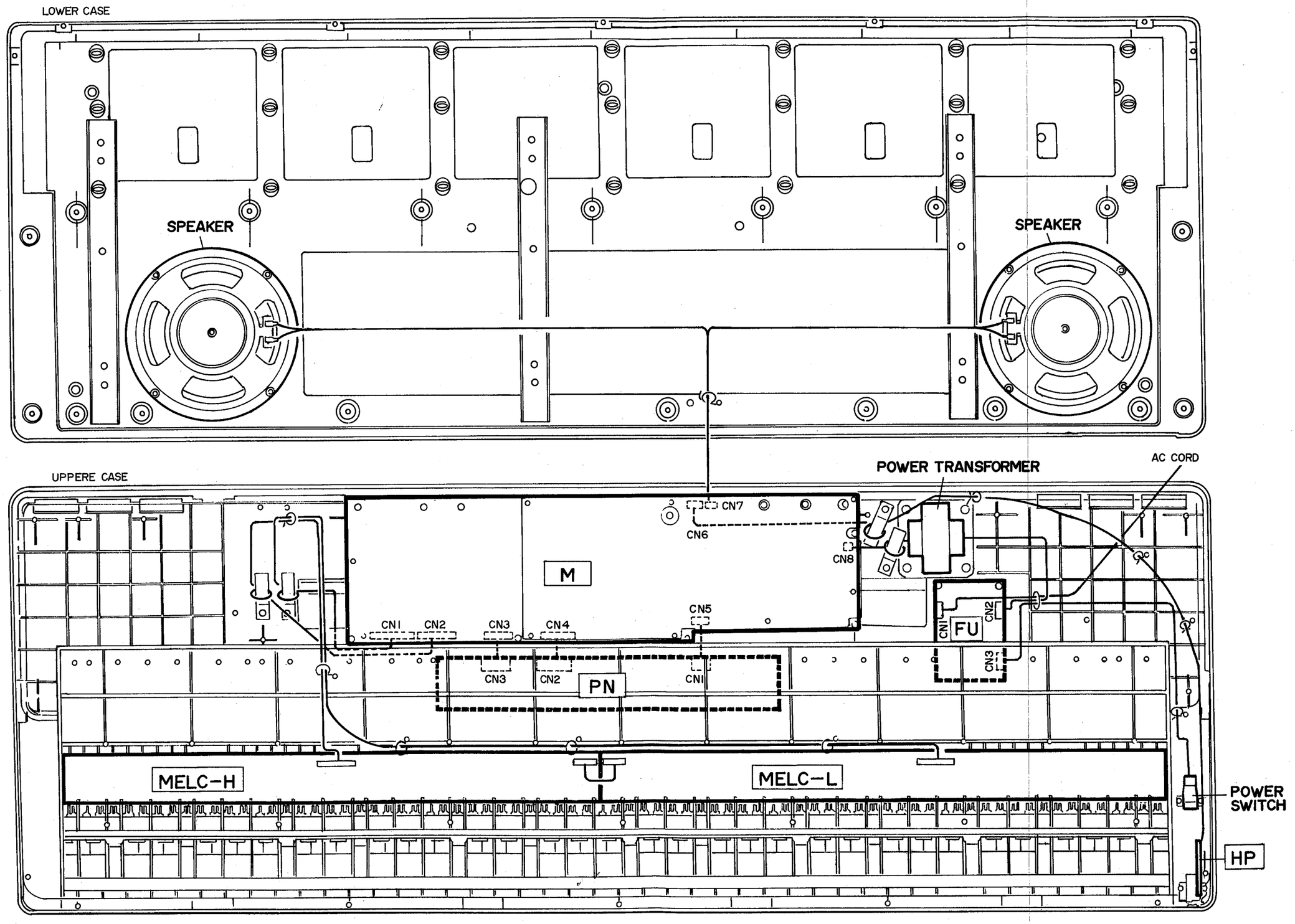

■BLOCK DIAGRAM

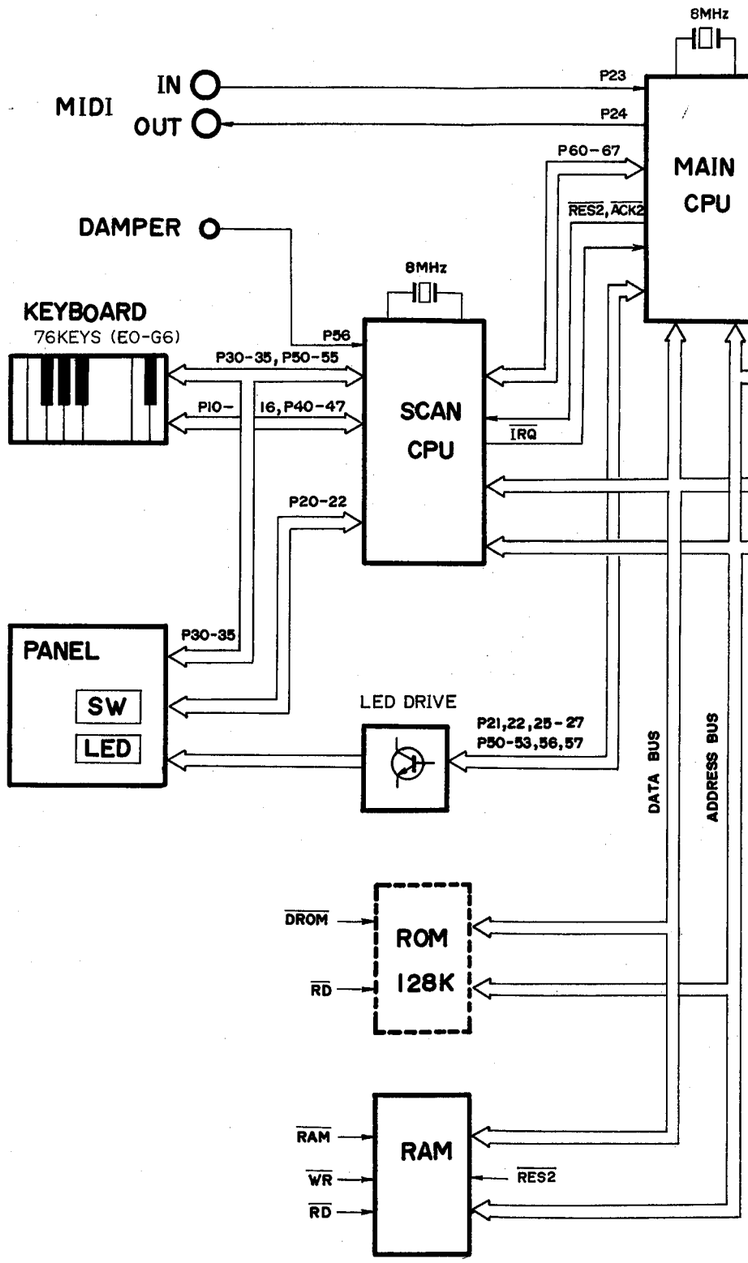

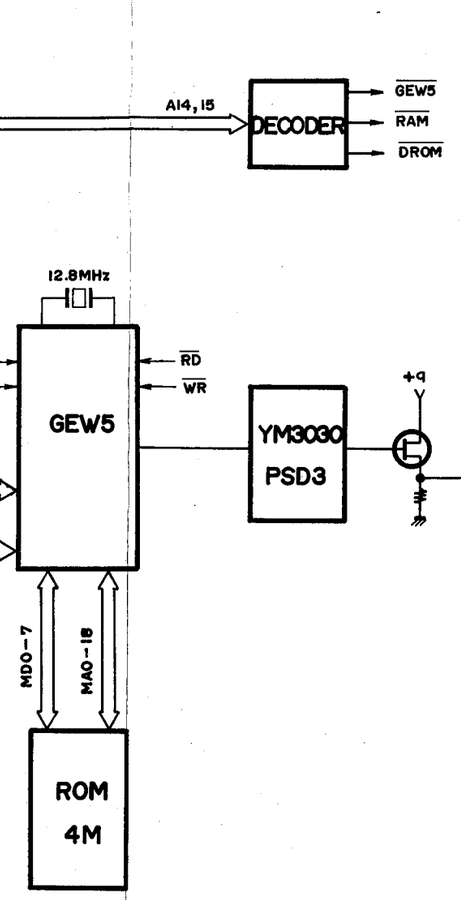

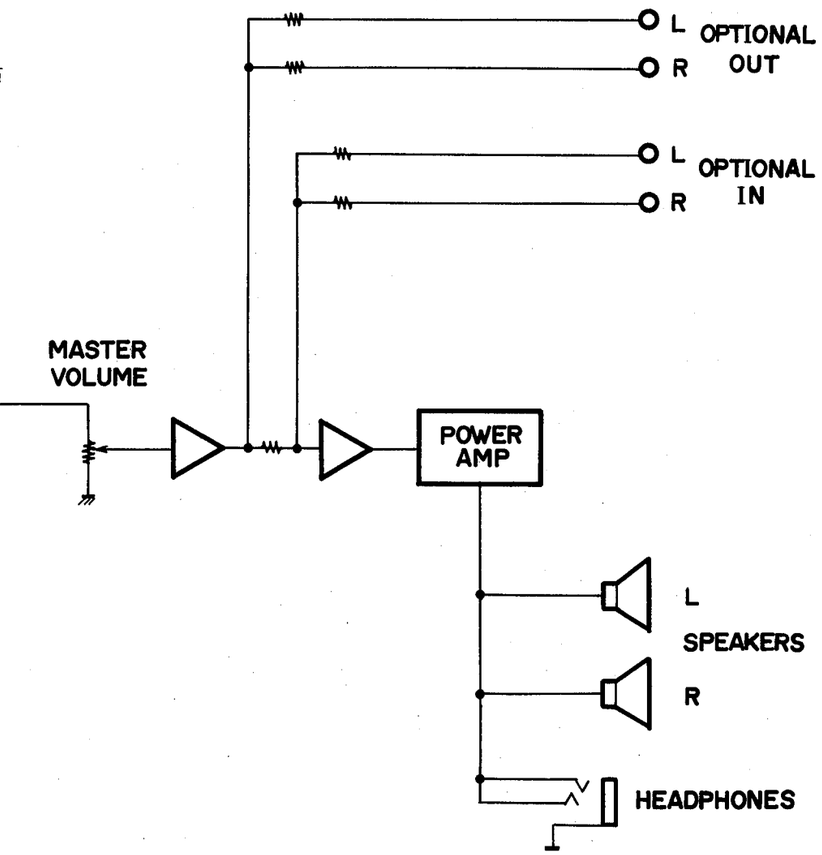

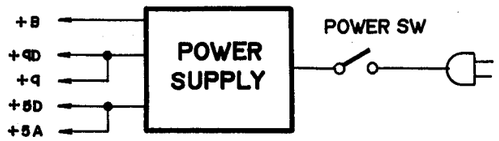

■DISASSEMBLY PROCEDURE

1. Main Unit

1-1. Remove the six (6) screws Ⓐ (6.0 x 16 trus head tapping screw), the Main unit can be removed from the stand. (Fig. 1)

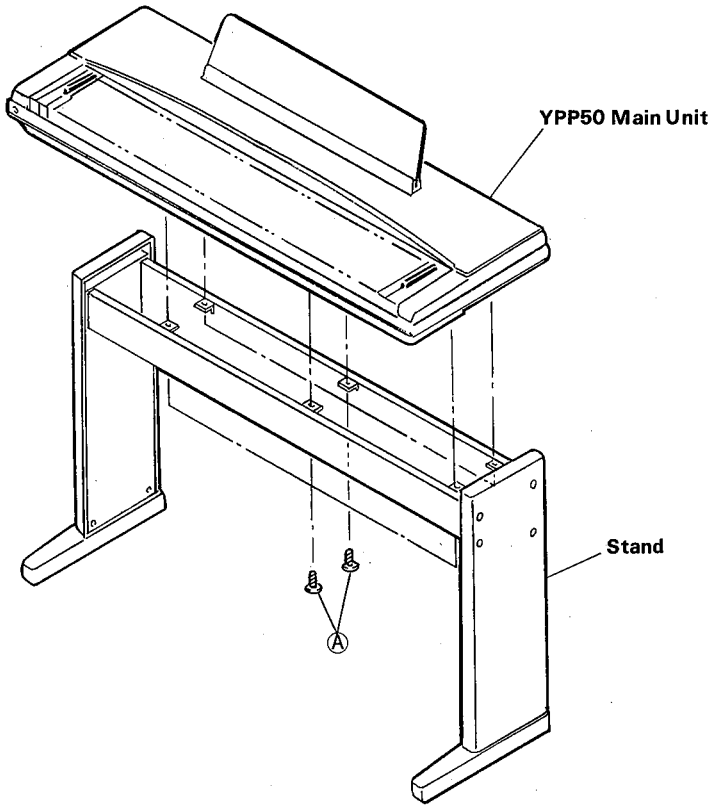

(Fig. 1)

2. Upper Case Assembly

2-1. Remove the Main unit. (see procedure 1.)

2-2. Remove the seven (7) screws adjacent to marked L (3.0 x 14 bind head tapping screw) and eighteen (18) screws adjacent to marked △ (3.0 x 10 bind head tapping screw) on the Bottom case.

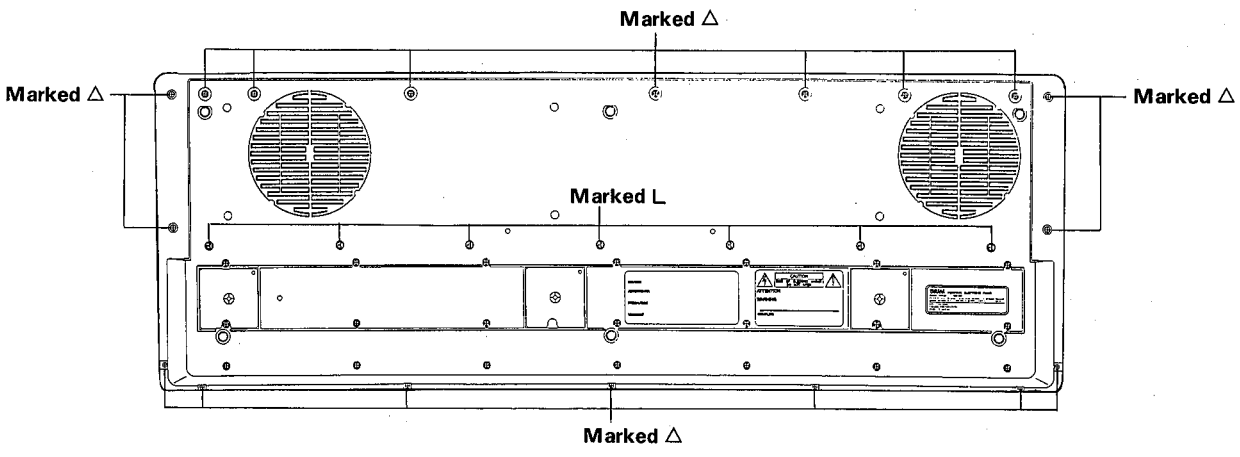

(Fig. 2)

note: Marked L and △ are on the Bottom case as shown below. (Fig. 2-2)

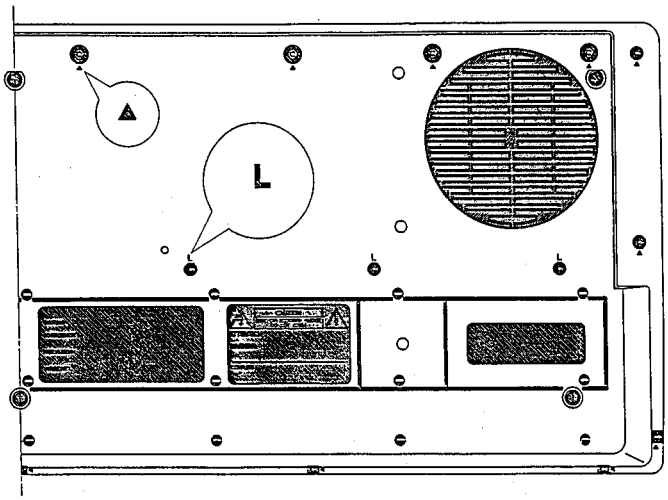

(Fig. 2-2)

2-3. Replace the Main unit upside up and Rear panel toward you on the maintenance table.
2-4. Lift the Upper case from the front about 90 degrees, and untie the cord binder to open the Upper case assembly completely. (fig. 2-3)

There are the M, PN, FU and HP circuit boards and Power transformer and Power switch on the Upper case. Located on the Lower case are the Keyboard assembly and Speakers.

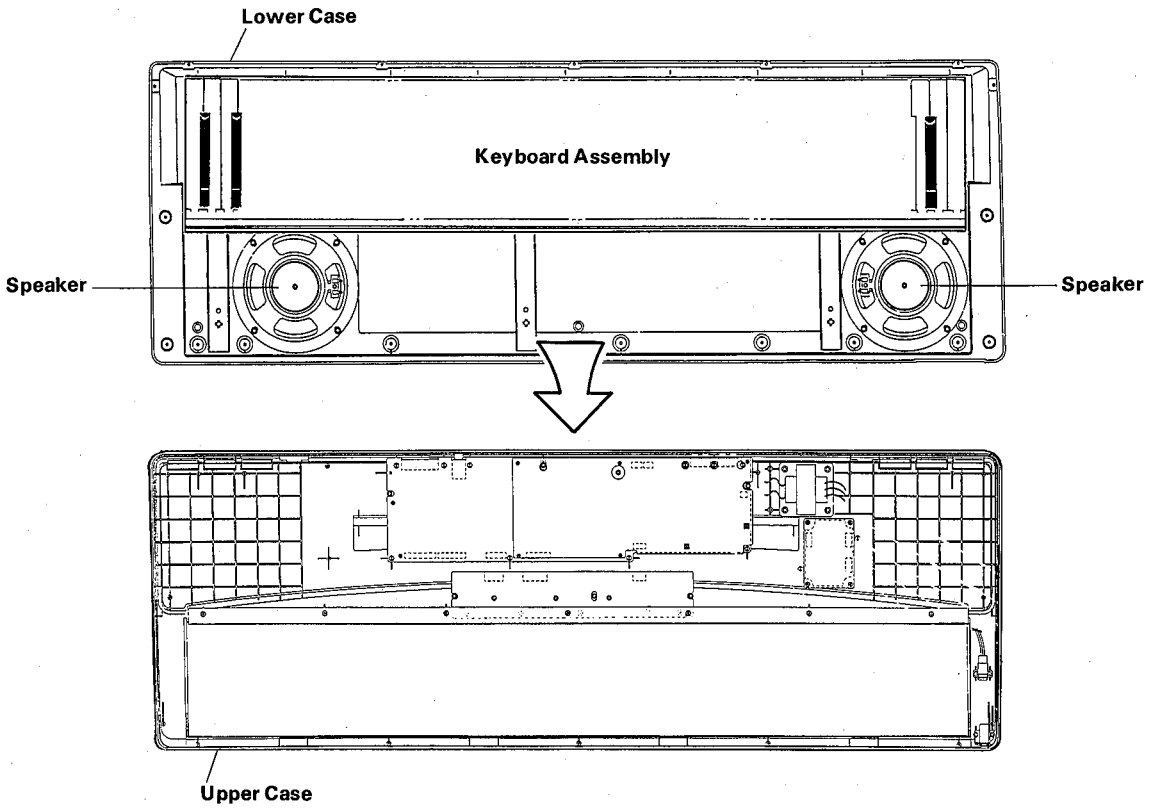

(Fig. 2-3)

3. M Circuit Board

3-1. Remove the Main unit from the Stand. (see procedure 1.)
3-2. Remove the Upper case assembly. (see procedure 2.)
3-3. The DM circuit board can be removed with the heat sink by removing the ten (10) screws Ⓑ (3.0 x 8 bind head tapping screw). (Fig. 3)
3-4. Remove the three (3) screws Ⓒ (3.0 x 12 bind head screw) and two (2) screws Ⓓ (4.0 x 16 bind head tapping screw). (Fig. 4)
3-5. Disconnect the seven (7) connectors on the M circuit board and remove the heat sink from the M circuit board while pressing the tip of the supports using a pair of pliers. (Fig. 3 and Fig. 4)

4. PN Circuit Board

4-1. Remove the Main unit from the Stand. (see procedure 1.)
4-2. Pull out the MASTER VOLUME knob on the Control panel.
4-3. Remove the Upper case assembly. (see procedure 2.)
4-4. After the eight screws Ⓔ (3.0 x 8 bind head tapping screw) have been removed, the PN circuit board can be removed. (Fig. 3)

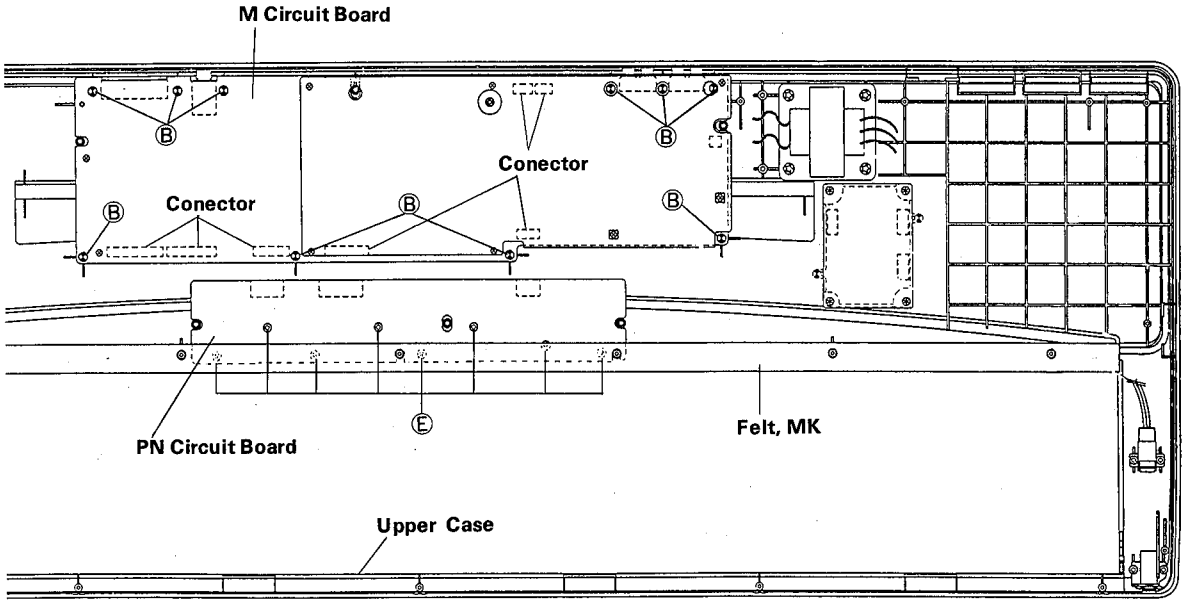

(Fig. 3)

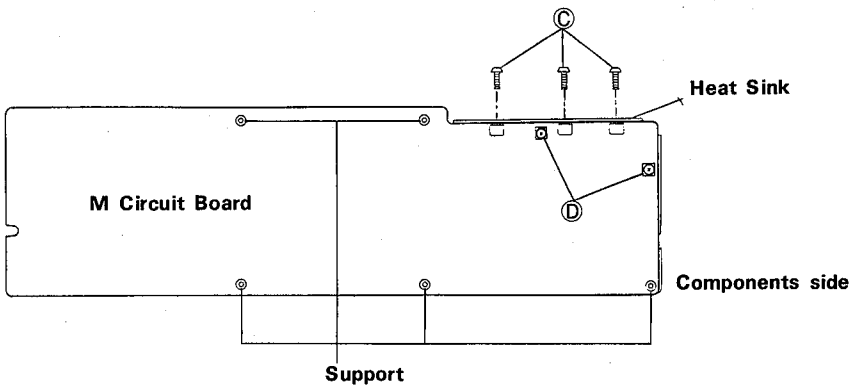

(Fig. 4)

5. Power Transformer

5-1. Remove the Main unit from the Stand. (see procedure 1.)
5-2. Remove the Upper case assembly. (see procedure 2.)
5-3. The Power transformer can be removed by removing the four (4) screws Ⓕ (4.0 x 8 bind head tapping screw). (Fig. 5)

6. FU Circuit Board

6-1. Remove the Main unit from the Stand. (see procedure 1.)
6-2. Remove the Upper case assembly. (see procedure 2.)
6-3. For the U.S. model only: Remove the two (2) screws Ⓗ (3.0 x 8 bind head tapping screw) to remove the Cover-FU.
6-4. Remove the four (4) screws Ⓖ (3.0 x 8 bind head tapping screw), the FU circuit board can be removed. (Fig. 5)

7. HP Circuit Board

7-1. Remove the Main unit from the Stand. (see procedure 1.)
7-2. Remove the Upper case assembly. (see procedure 2.)
7-3. After the two (2) screws Ⓘ (3.0 x 8 bind head tapping screw) have been removed, the HP circuit board can be removed. (Fig. 5)

8. Power Switch

8-1. Remove the Main unit from the Stand. (see procedure 1.)
8-2. Remove the Upper case assembly. (see procedure 2.)
8-3. The Power switch can be removed by removing the two screws Ⓙ (3.0 x 8 bind head tapping screw). (Fig. 5)

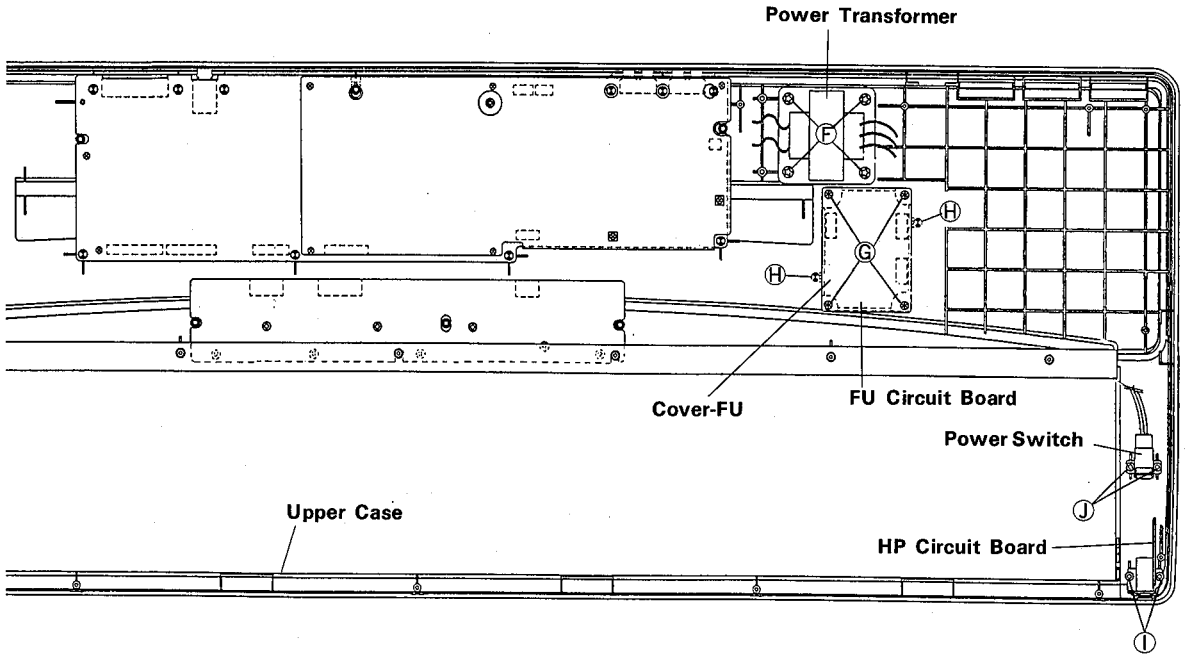

(Fig. 5)

9. Keyboard Assembly

9-1. Remove the Main unit from the Stand. (see procedure 1.)
9-2. Remove the Upper case assembly. (see procedure 2.)
9-3. Place the Lower case assembly upside down.
9-4. Remove twenty-one (21) screws Ⓚ (3.0 x 14 bind head tapping screw), and the Keyboard assembly can be removed. (Fig. 6)

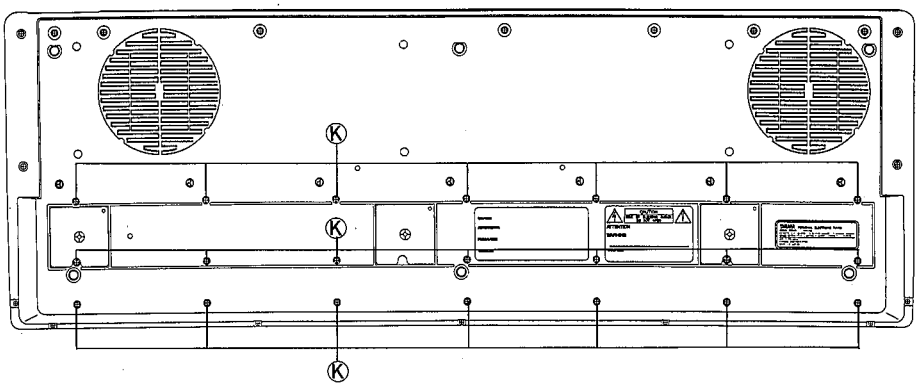

(Fig. 6)

10. Disassembly of the Keyboard Assembly

10-1. Remove the Keyboard assembly. (see procedure 9.)
10-2. MK circuit board removal
10-2-1. While pressing the fourteen (14) hooks in the direction of the arrow, remove the MK circuit board. (Fig. 7)

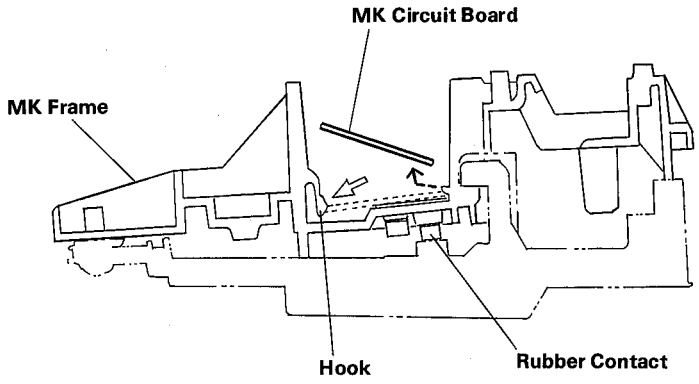

(Fig. 7)

10-3. White key E,F and Black key-S removal
10-3-1. Pull out the rubber contacts E and F.F #.
10-3-2. Remove the Three (3) screws Ⓛ (3.0 x 20 bind head tapping screw), and remove white keys E,F and black key-S in that order. (Fig. 8)
10-4. White key ACE, GBDF and Black key (5 keys) removal
10-4-1. Pull out the rubber contact (12 keys).
10-4-2. Remove the eight (8) screws Ⓜ (3.0 x 20 bind head tapping screw), and remove keys in order of white keys ACE, GBDF and black key (5 keys). (Fig. 8)
10-5. White key G removal
10-5-1. Pull out the rubber contact (1 key).
10-5-2. Remove the screw Ⓝ (3.0 x 20 bind head tapping screw), and remove the white key G. (Fig. 8)

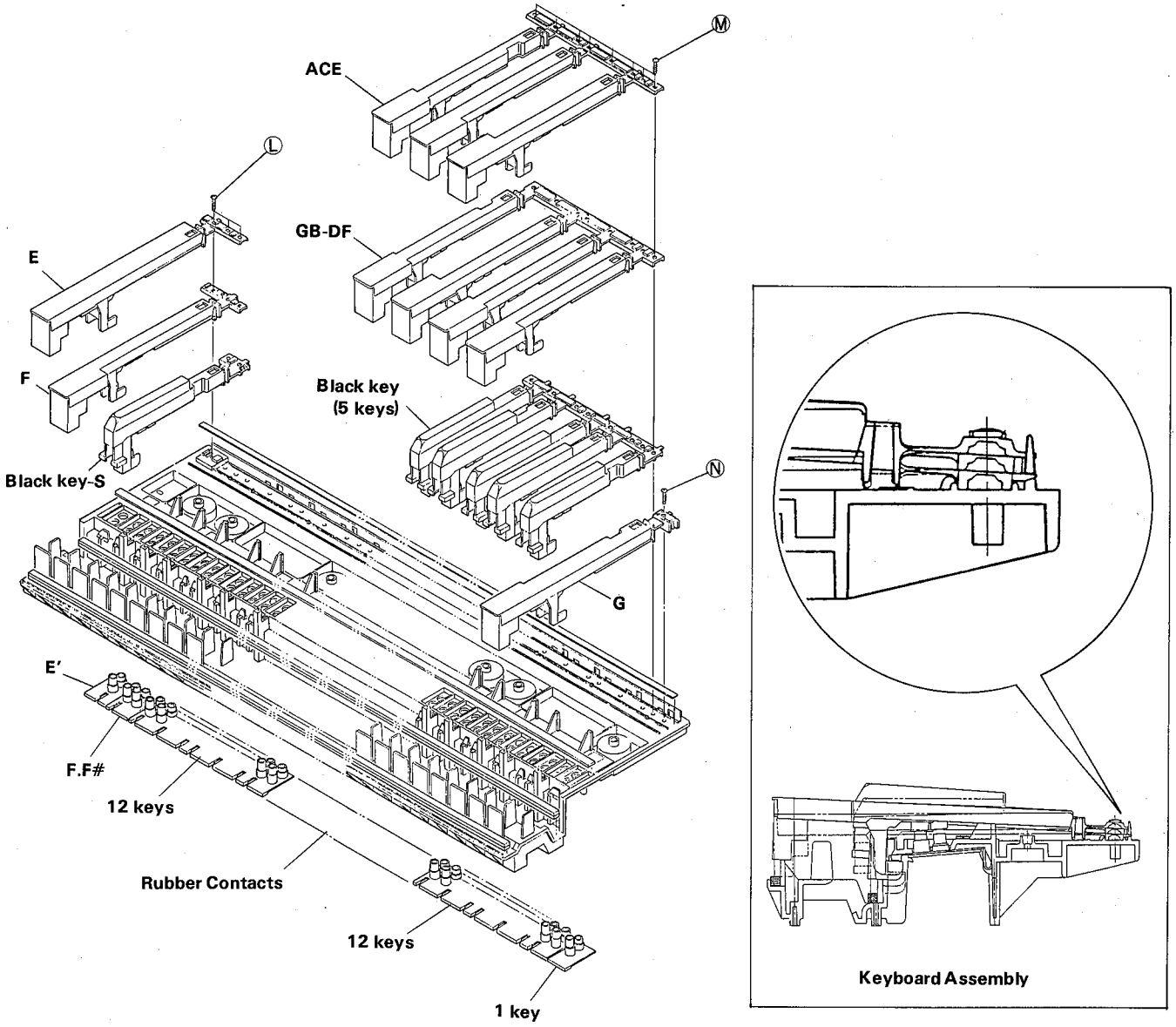

(Fig. 8)

■LSI DATA TABLE

- **HD63B03YP-N** (XD245001) MAIN CPU
- **HD63B01Y0RL56P** (XH138A00) MAIN CPU
- **HD63B01Y0RL46P** (XG852A00) SCAN CPU

PIN NO.	NAME	I/O	FUNCTION	PIN NO.	NAME	I/O	FUNCTION
1	Vss		Ground	33	Vcc		DC Supply (+5V)
2	XTAL	I	Clock (8MHz)	34	P47	O	Port 4
3	EXTAL	I		35	P46	O	
4	MP0	I	Mode program	36	P45	O	
5	MP1	I		37	P44	O	
6	$\overline{RES}$	I	Reset	38	P43	O	
7	$\overline{STBY}$	I	Stand-by mode signal	39	P42	O	
8	$\overline{NMI}$	I	Non-maskable interrupt	40	P41	O	
9	P20	I/O	Port 2	41	P40	O	
10	P21	I/O		42	Vss		Ground
11	P22	I/O		43	P17	O	Port 1
12	P23	I/O		44	P16	O	
13	P24	I/O		45	P15	O	
14	P25	I/O		46	P14	O	
15	P26	I/O		47	P13	O	
16	P27	I/O		48	P12	O	
17	P50	I/O	Port 5	49	P11	O	
18	P51	I/O		50	P10	O	
19	P52	I/O		51	P37	I/O	Port 3
20	P53	I/O		52	P36	I/O	
21	P54	I/O		53	P35	I/O	
22	P55	I/O		54	P34	I/O	
23	P56	I/O		55	P33	I/O	
24	P57	I/O		56	P32	I/O	
25	P60	I/O	Port 6	57	P31	I/O	
26	P61	I/O		58	P30	I/O	
27	P62	I/O		59	P74	O	Port 7
28	P63	I/O		60	P73	O	
29	P64	I/O		61	P72	O	
30	P65	I/O		62	P71	O	
31	P66	I/O		63	P70	O	
32	P67	I/O		64	E	O	Enable

- **Mode Program**

	MP0	MP1
Mode 1	H	L
Mode 2	L	H
Mode 3	H	H

- **Port**

	Mode 1, 2	Mode 3
Port 1	Address bus (A0 ~ A7)	O Port
Port 2	I/O Port	I/O Port
Port 3	Data bus (D0 ~ D7)	I/O Port
Port 4	Address bus (A8 ~ A15)	O Port
Port 5	I/O Port	I Port
Port 6	I/O Port	I/O Port
Port 7	RD, WR, R/W, LIR, BA	O Port

- **YM3030** (XG075A00) DAC

PIN NO.	NAME	I/O	FUNCTION	PIN NO.	NAME	I/O	FUNCTION
1	AVDD		Power supply (+5 – +9V)	9	NC		
2	SI0	I	PSD3 format input	10	SHIN	I	Sample hold input
3	SI1	I		11	SHOUT	O	Sample hold output
4	SI2	I		12	AOUT	O	Analog signal output
5	SYW	I	Synchro. pulse input	13	MP	I	Middle point input
6	DGND		Ground	14	RB	O	Middle point output
7	CLK	I	Clock	15	AGND		Ground
8	DVDD		Power spply (+5 – +9V)	16	NC		

• **TMC3493PH** (XF987A00) GEW-5

PIN NO.	NAME	I/O	FUNCTION	PIN NO.	NAME	I/O	FUNCTION
1	CASI00	I	Cascade in A	41	$\overline{MAE}$	O	Memory address enable
2	VDD		Power supply (+5V)	42	VDD		Power supply
3	D0	I/O	μCom. data bus	43	$\overline{MRD}$	O	Memory read control
4	D1	I/O		44	$\overline{MWR}$	O	Memory write control
5	D2	I/O		45	MD7	I/O	External memory data bus
6	D3	I/O		46	MD6	I/O	
7	D4	I/O		47	MD5	I/O	
8	D5	I/O		48	MD4	I/O	
9	D6	I/O		49	MD3	I/O	
10	D7	I/O		50	MD2	I/O	
11	A0	I	μCom. address bus	51	MD1	I/O	
12	A1	I		52	MD0	I/O	
13	$\overline{CS}$	I	Chip select	53	$\overline{MUTE}$	O	Analog mute control
14	$\overline{WR}$	I	Write control	54	$\overline{IC}$	I	Initial clear
15	$\overline{RD}$	I	Read control	55	SYO	O	Synchro. pulse input
16	$\overline{SM}$	I	Slave/Master select	56	SYI	I	Synchro. pulse output
17	$\overline{TEST1}$	I	Test pin	57	XCLK	O	3.2MHz
18	$\overline{TEST2}$	I		58	CLC	I	MCLK in/out select
19	MA0	O	External memory address bus	59	MCLK	I/O	6.4MHz
20	MA1	O		60	VDD		Power supply
21	MA2	O		61	XOUT	O	Clock
22	MA3	O		62	XIN	I	
23	Vss		Ground	63	Vss		Ground
24	MA4	O	External memory address bus	64	SO12	O	PSD3 format output B
25	MA5	O		65	SO11	O	
26	MA6	O		66	SO10	O	
27	MA7	O		67	SO02	O	PSD3 format output A
28	MA8	O		68	SO01	O	
29	MA9	O		69	SO00	O	
30	MA10	O		70	CASO12	O	Cascade out B (SFC/RFL format-linear)
31	MA11	O		71	CASO11	O	
32	MA12	O		72	CASO10	O	
33	MA13	O		73	CASO02	O	Cascade out A (SFC/RFL format-linear)
34	MA14	O		74	CASO01	O	
35	MA15	O		75	CASO00	O	
36	MA16	O		76	CASI12	I	Cascade in B (serial sum)
37	MA17	O		77	CASI11	I	
38	MA18	O		78	CASI10	I	
39	MA19	O		79	CASI02	I	Cascade in A (serial sum)
40	MA20	O		80	CASI01	I	

■IC BLOCK DIAGRAM

• **NJM4558S** (IG076800)
Dual Operational Amplifier

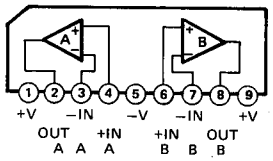

• **MC74HC00AN** (IR000070)
Quad 2 Input NAND

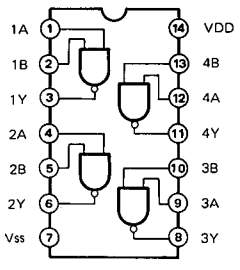

• **MC74HC139N** (IR013970)
Dual 2 to 4 Demultiplexer

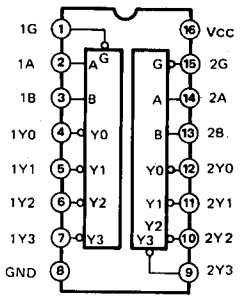

■CIRCUIT BOARDS

● M Circuit Board

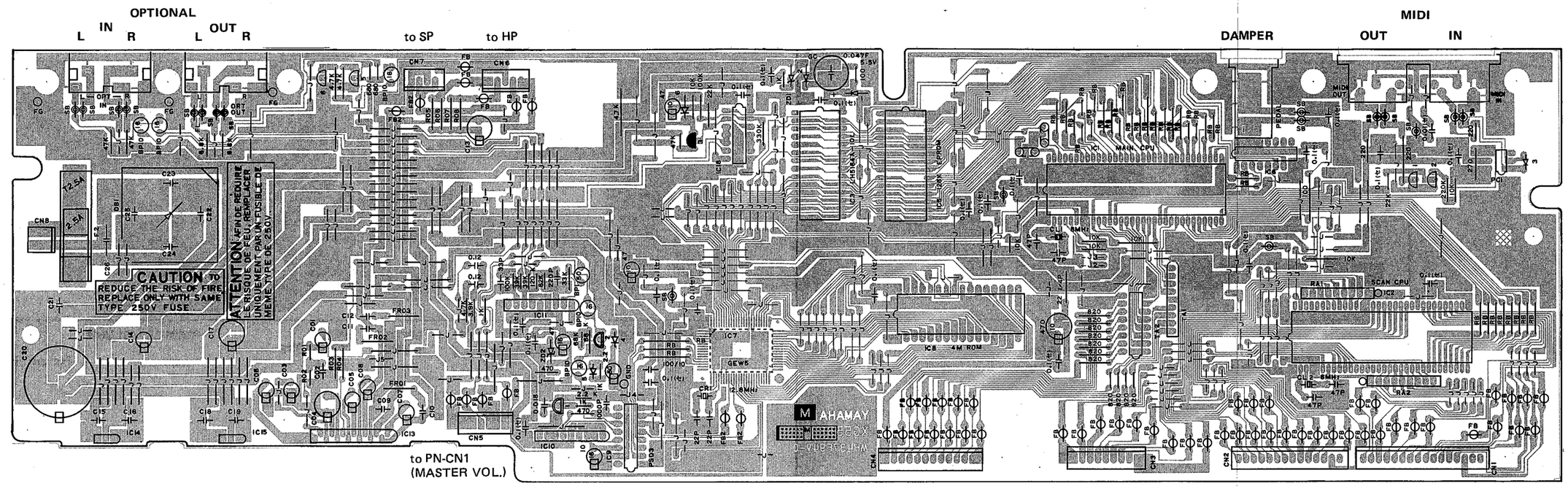

Components side

Notes)

*Circuit Board: M (VH856100) XG558B0 (J, X, M)
M (VH856200) XG558B0 (U, C)
M (VH856300) XG558B0 (H, B, A)

1. IC
   - IC 1: HD63B03YP-0RL56P (XH138A00) CPU
     HD63B03YP-N (XD245001) CPU
   - IC 2: HD63B01Y0RL46P (XG852A00) SCAN CPU
   - IC 3: LH5164D-10L (XF876A00) SRAM
   - IC 5: (XG851A00) MAIN ROM
   - IC 6: MC74HC139N (IR013970) DECODER
   - IC 7: TMC3493PH (XF987A00) GEW5
   - IC 8: (XG853A00) WAVE ROM 4M or
     (XH139A00) WAVE ROM 4M
   - IC 9: YM3030 (XG075A00) DAC
   - IC 10,11: NJM4558S (IG076800) OP AMP
   - IC 13: LA4495 (XE806A00) P AMP 20W 1CH
   - IC 14: NJM7805FA (XC719001) REGULATOR 5V
   - IC 15: AN78N09 (XB374A00) REGULATOR 9V
   - IC 16: MC74HC00AN (IR000070) NAND
2. Transistor Array
   - TA 1: TD62554S (VB645300)
   - TA 2: MC1413P (VH441500)
3. Transistor
   - Tr 1,2,5,6: 2SC1740S R,S (IC174070)
   - Tr 3: 2SA1015 O,Y (IA101580)
4. FET
   - FET 1,2: 2SK246 Y (IE102610)
5. Diode
   - D 1-6: 1SS133 (IF003450)
6. Zener Diode
   - ZD 1: RD5.6EB3 5.6V (IF001690)
   - ZD 2: MTZ4.7A 4.7V (IF010650)
7. Diode Stack
   - DB : 4D4B41 4A 200V (IH000870)
8. Ferrite Bead & Coil
   - FB : BL02RN1-R62T2 (GE300610)
   - FB2 : BL02RN2-R62T2 (GE300670)
   - SBTW : 80μ SBT-0180W (VF456600)
   - SB : 60μ SBT-0260TF (VF968800)
9. Jacks
   - OPT : YKC21-0188 (AA058660) OPTIONAL IN, OUT
   - PEDAL : YKB21-5012 BL (VB312600) DAMPER
   - MIDI : 5P YKF51-50 (VH303500) MIDI IN, OUT
10. Fuse
    - F2 : 2.5A 250V 30 mm (KB000420) J,X,M
      2.5A 250V 30 mm (KB002680) U,C
      2.5A 250V 20 mm (KB000690) H,B,A
11. Resistor Array
    - RA 1,2: RKC1/8B8 10K J (HZ003200)
12. Photo Coupler
    - PC 1: PC-900V (VG181900)
13. Quartz Crystal Unit
    - CR 1: 12.800M AT-51 (VD323800)
14. Ceramic Resonator
    - CL 1,2: 8.00M CSA8.00MT (QU008500)
15. Gold Cap. & Super Cap.
    - GC : 0.047F 5.5V (VC309100) BACKUP BATTERY or
      0.047F 5.5V (VI055100) BACKUP BATTERY
16. Semiconductive Cera. cap.
    - C9,15,16,18,19,21 : 0.1μ 25V Z (VC694800)
17. Cera. cap. Array
    - CA 1,2: 100P 50V M (VH484100) 100Px8
18.

R01	47K	C01	K0.22/50	C14	K100/10
R02	15K	C02	C470P	C15	C0.1 (セ)
R03	10K	C03	K100/6.3	C16	C0.1 (セ)
R04	1M	C04	K220/16	C17	K470/10
R05	68 Ω ¼W	C05	K100/6.3	C18	C0.1 (セ)
R06	68 Ω ¼W	C06	K100/6.3	C19	C0.1 (セ)
R07	68 Ω ¼W	C07	C0.1 (セ)	C20	4700/25
R08	68 Ω ¼W	C08	K47/16	C21	C0.1 (セ)
FR01	3.3 Ω ½W	C09	C0.1 (セ)	C22	C1000P
FR02	3.3 Ω ½W	C10	M0.15	C23	C1000P
FR03	3.3 Ω ½W	C11	M0.15	C24	C1000P
RB1	560 Ω	C12	M0.01	C25	C1000P
RB2	220 Ω	C13	K220/16	C26	C0.1/500

19.

IC1	XD245001	XH138A00
IC5	XG851A00	X
J2	X	○
J3	○	X

(○: installed X: not installed)

● PN Circuit Board

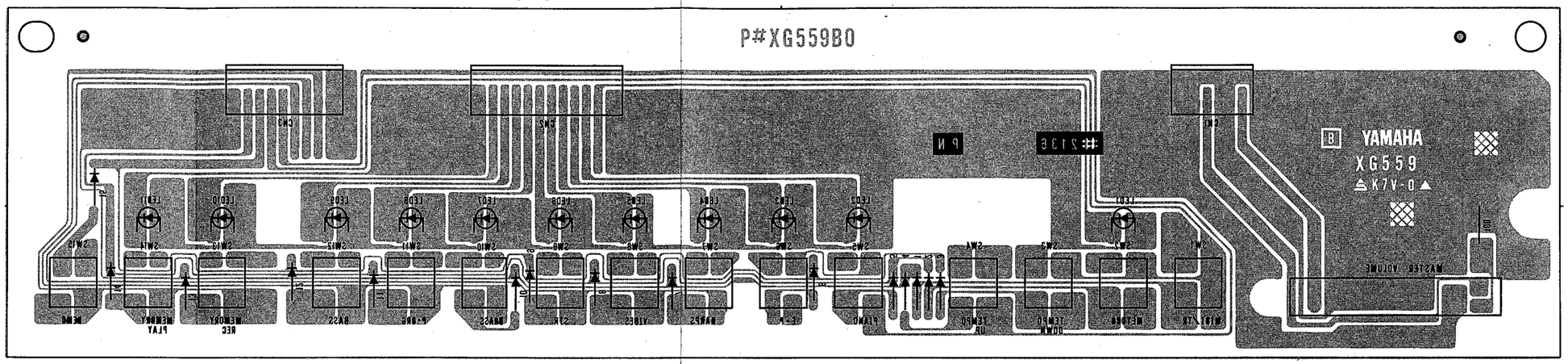

Pattern side

Notes)
*Circuit Board: PN (VH856500) XG559B0
1. Diode
   D 6-14: 1SS133 (IF003450)
2. LED
   LED 1-11: SLZ-190B-01 RED (VI100100)
3. Push Switch
   SKEVAA (VI049000)
4. Slide Pot.
   A10K RS30111A9 (VI099900)
   MASTER VOLUME

● FU Circuit Board

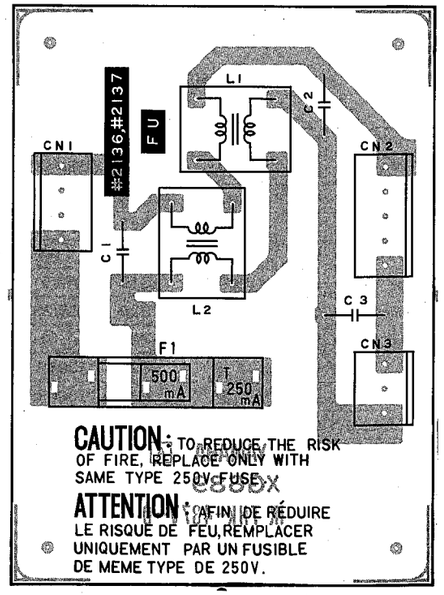

to AC

to Power Transformer

to Power SW

Components side

Notes)
*Circuit Board: FU (VH856600) XG689A0 (J,X,M)
FU (VH856700) XG689A0 (U,C)
FU (VH856800) XG689A0 (H,B,A)
1. Coil
   L 1: SU10V-D10010 (VF616300)
   L 2: SU10V-10010 (VF370900) 1mH
2. Ceramic Cap.
   C 1: 0.01 μ 400V (FI384100) (J.C.S.V)
   0.01 μ 400V (FI494100) (J.U.C.S)
   C 2,3: 4700P 400V (FI383470) (J.U.S.V)
   4700P 400V (FI880100) (U.C.S)
3. Fuse
   F 1: 500 mA 250V (KB000310) J.X.M
   500 mA 250V (KB001150) U.C
   250 mA 250V (KB000640) H.B.A

● HP Circuit Board

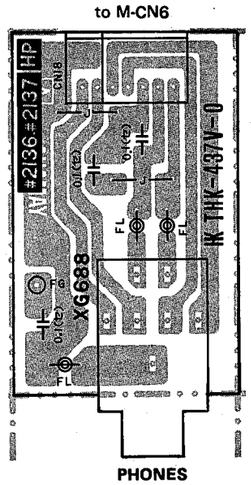

Components side

Notes)
*Circuit Board: HP (NX004200) XG688A0
1. Semiconductive Cera. Cap.
   marked 0.1 (ヒ) 0.1 μ 25V Z (VC694800)
2. Coil
   FL : 20 μ FL5R200QNT (VB835000)

PN: 2NA-VH85650 ⚠
FU: 2NA-VH85660
HP: 2NA-VI14440 ⚠

■TEST PROGRAM

- **Test Entry**
  While pressing E0 and G6 keys, turn on the POWER switch.
  * Before entering the test program, attach the FC-5 foot switch to the DAMPER connector on the rear panel, and connect the MIDI IN to the MIDI OUT jack with a MIDI cable.

1. TEST 1: Make contact check

After the system has entered the test program mode, the make contact check will be performed automatically.

1) If keys of the keyboard check is NG, the PIANO LED will light.
2) If an error is detected on voice selector check, the E. PIANO LED will light.
3) If foot switch check is NG, the HARPSI. LED will light.

2. TEST 2: MIDI check

If the MIDI/TRANSPOSE button is pressed, the MIDI check will be performed. If an error is detected, the VIBES LED will light.

3. TEST 3

Pressing a key of the keyboard will activate the fillowing test as shown below.

1) F0-ON The system will restore normal operation.
2) G0-ON A sinwave of A3 will be produced continuously. (GEW5-ch1)
3) A0-ON A sinwave of A3 will be produced continuously at low level. (GEW5-ch1)
4) B0-ON A sinwave of A3+50 cents will be produced continuously. (GEW5-ch1)
5) C1-ON A sinwave of A3 will diminish. (GEW5-ch1)
6) D1-ON All LED indicators will light simultaneously.
7) E1-ON All LED indicators will turn off.
8) F1-ON A sinwave of 1kHz will be produced continuously. (GEW5-ch3)
9) G1-ON A sinwave of 1kHz will diminish. (GEW5-ch3)
10) A1-ON The performance memory data will be initialized.
11) F6-ON The voice seletor LEDs will indicate the version number of the program ROM as shown below.

PIANO	E. PIANO	HARPSI.	VIBES	version no.
O	X	X	X	1
X	O	X	X	2
O	O	X	X	3
X	X	O	X	4
O	X	O	X	5
X	O	O	X	6
O	O	O	X	7
X	X	X	O	8
O	X	X	O	9
X	O	X	O	10 (A)
O	O	X	O	11 (B)
X	X	O	O	12 (C)
O	X	O	O	13 (D)
X	O	O	O	14 (E)
O	O	O	O	15 (F)

O: on X: off

■MIDI DATA FORMAT

1. NOTE ON/OFF

Data format: [9nH]→[kk]→[vv]

9nH = Note ON/OFF event (n = channel number)
kk = Note number (28 ~ 103 = E0 ~ G6)
vv = Velocity (Key ON = 1 ~ 127. Key OFF = 0)

** Note OFF event format [8nH]→[kk] also recognized (reception only).*

2. CONTROL CHANGE & MODE MESSAGES

Data format: [BnH]→[cc]→[dd]

BnH = Control event (n = channel number)
cc = Control number (or mode message number)
dd = Control value

cc	PARAMETER	dd
07H	Volume	0 = OFF; 6FH = −3dB; 7FH = 0dB
0BH	Expression	0 = OFF; 6FH = −3dB; 7FH = 0dB
40H	Damper pedal	0 ~ 3FH = OFF; 40H ~ 7FH = ON
43H	Soft pedal	0 ~ 3FH = OFF; 40H ~ 7FH = ON
79H	Reset all controllers	0
7AH	Local ON/OFF	0 = OFF; 7FH = ON
7BH	All notes OFF	0
7CH	OMNI OFF/All notes OFF	0
7DH	OMNI ON/All notes OFF	0

** 43H, 79H, 7AH, 7BH, 7CH and 7DH are receive only.*

3. PROGRAM CHANGE

Data format: [CnH]→[dd]

CnH = program event (n = channel number)
dd = Program number

dd	VOICE	dd	VOICE
00H	PIANO	08H	PIANO + BASS
01H	E.PIANO	09H	E.PIANO + BASS
02H	HARPSI	0AH	HARPSI + BASS
03H	VIBES	0BH	VIBES + BASS
04H	BRASS	0CH	BRASS + BASS
05H	STRINGS	0DH	STRINGS + BASS
06H	P.ORGAN	0EH	P.ORGAN + BASS
07H	BASS	—	—

** No voice change is made when dd > 0EH.*

4. SYSTEM REALTIME MESSAGES

Active Sensing (FEH)

Transmitted every 200 milliseconds. If not received for more than 400 milliseconds a NOTE OFF occurs.

5. SYSTEM EXCLUSIVE MESSAGES

Data format: [F0H]→[43H]→[xn]→[ff]..... [F7H]

x = 0, ff = 7CH: Panel data dump. Panel data follows 7CH.
x = 2, ff = 7CH: Panel data request transmission.

Data format: [F0H]→[43H]→[73H]→[20H]→[nn]→[F7H]

43H = YAMAHA ID
73H = SINGLE KEYBOARD ID
20H = YPP-50 ID
nn = 40H: Performance play ON (receive only)
nn = 41H: Performance play OFF (receive only)
nn = 50H: Tempo UP
nn = 51H: Tempo DOWN
nn = 52H: Tempo 120

6. MULTI TIMBRE MODE

Data format: [F0H]→[43H]→[73H]→[id]→[nn]→[F7H]

43H = YAMAHA ID
73H = SINGLE KEYBOARD ID
id = 01H (Standard), 1BH (Clavinova), or 20H (YPP-50)
nn = 15H: MULTI TIMBRE mode ON; nn = 13H: MULTI TIMBRE mode OFF; nn = 7nH: Receive channel change (n = channel number. Receive only).

YAMAHA [Personal Electronic Piano] Date : 7/28, 1989
Model YPP50 MIDI Implementation Chart Version : 1.0

Function		Transmitted	Recognized	Remarks
Basic Channel	Default	1	1	
	Changed	1-16	1-16	
Mode	Default	3	1	
	Messages	X	OMNIon,OMNIoff	
		**********	X	
Note Number		28-103	28-103	
	True voice	**********	28-103	
Velocity	Note on	O 9nH,v=1-127	O v=1-127	
	Note off	X 9nH,v=0	X	
After Touch	Key's	X	X	
	Ch's	X	X	
Pitch Bender		X	X	
Control Change	07	X	O	Volume
	11	X	O	Expression
	64	O	O	Damper
	67	X	O	Soft Pedal
	121	X	O	Reset All Controllers
Program Change		O 0-14	O 0-14	
	True #	**********	0-14	
System Exclusive		O	O	
System Common	Song Pos	X	X	
	Song Sel	X	X	
	Tune	X	X	
System Real Time	Clock	X	X	
	Commands	X	X	
Aux Mes- sages	Local ON/OFF	X	O	
	All Notes OFF	X	O (123-125) *1	
	Active Sense	O	O	
	Reset	X	X	

Notes : *1 = receive (123) if omni off or multi-timbre on

Mode 1 : OMNI ON, POLY Mode 2 : OMNI ON, MONO O : Yes
Mode 3 : OMNI OFF, POLY Mode 4 : OMNI OFF, MONO X : No

PERSONAL ELECTRONIC PIANO

YPP-50

PARTS LIST

Notes DESTINATION ABBREVIATIONS

J	: Japanese model	A	: Australian model
U	: U.S. model	E	: European model
C	: Canadian model	D	: West German model
X	: General model	B	: British model
M	: South African model	I	: Indonesian model
H	: North European model		

■ELECTRICAL PARTS

	Ref. No.	Part No.	Description		部品名	Remarks	ランク
**		VH856100	Circuit Board	M	Mシート	J,X,M YPP50	
**		VH856200	Circuit Board	M	Mシート	U,C	
**		VH856300	Circuit Board	M	Mシート	H,B,A	
**		VH856500	Circuit Board	PN	PNシート		
**		NX004200	Circuit Board	HP	HPシート		
**		VI222600	Circuit Board	AELC-L	AELC-Lシート		
**		VI222700	Circuit Board	AELC-H	AELC-Hシート		
**		VH856600	Circuit Board	FU	FUシート	J,X,M	
**		VH856700	Circuit Board	FU	FUシート	U,C	
*		VH856800	Circuit Board	FU	FUシート	H,B,A	
*		VH856100	Circuit Board	M	Mシート	J,X,M	
**		VH856200	Circuit Board	M	Mシート	U,C	
*		VH856300	Circuit Board	M	Mシート	H,B,A	
		IG076800	IC	NJM4558S	IC	OP AMP	03
*		IR000070	IC	MC74HC00AN	IC	NAND	01
		IR013970	IC	MC74HC139N	IC	DECODER	02
		XD245001	IC	HD63B03YP-N	IC	CPU ～S/#1600	08
*		XH138A00	IC	HD63R01Y0RL56P	IC	CPU S/#1601～	
		XF876A00	IC	LH5164D-10L	IC	SRAM	08
*		XG851A00	IC	MAIN ROM	IC	～S/#1600	
**		XG852A00	IC	HD63B01Y0RL46P	IC	SCAN CPU	
**		XH139A00	IC		IC	WAVE ROM 4M	
		XF987A00	IC	TMC3493PH	IC	GEW5	10
		XG075A00	IC	YM3030	IC	DAC	08
		XE806A00	IC	LA4495	IC	P AMP 20W 1CH	05
		XC719001	IC	NJM7805FA	IC	REGULATOR 5V	03
		XB374A00	IC	AN78N09	IC	REGULATOR 9V	03
		VG181900	Photo Coupler	PC-900V	フォトカプラ		03
		IA101580	Transistor	2SA1015 O,Y	トランジスタ		03
		IC174070	Transistor	2SC1740S R,S	トランジスタ		03
		VB645300	Transistor Array	TD62554S	トランジスタアレイ		03
		VH441500	Transistor Array	MC1413P	トランジスタアレイ		03
		IE102610	FET	2SK246 Y	FET		03
		IF003450	Diode	1SS133	ダイオード		01
		IF001690	Zener Diode	RD5.6EB3 5.6V	ツェナーダイオード		01
		IF010650	Zener Diode	MTZ4.7A 4.7V	ツェナーダイオード		01
		IH000870	Diode Stack	4D4B41 4A 200V	ダイオードスタック		04
		VH484100	Cera. Cap. Array	100P 50V M	セラコンアレイ		02
		VA302600	Ceramic Cap.	0.01μ 500V P	セラコン(E)		01
		VC309100	Gold Cap.	0.047F 5.5V	ゴールドキャパシタ	Backup battery	03
*		VI055100	Super Capacitor	0.047F 5.5V	スーパーキャパシタ	Backup battery	
		VC694800	Semiconductive Cera. Cap.	0.1μ 25V Z	半導体セラコン		01
		VI710500	Electrolytic Cap.	4700 25V	ケミコン		03
		VB471400	Fuse Resistor	3.3Ω 1/2W J	ヒューズ抵抗		01
		HZ003200	Resistor Array	RKC1/8B8 10K J	抵抗アレイ		01
		GE300610	Ferrite Bead	BL02RN1-R62T2	フェライトビーズ		01
		GE300670	Ferrite Bead	BL02RN2-R62T2	フェライトビーズ		02
		VF968800	Coil	60μ SBT-0260TF	コイル		01
		VF456600	Coil	80μ SBT-0180W	コイル		03
		VD323800	Quartz Crystal Unit	12.800M AT-51	水晶振動子		03
		QU008500	Ceramic Resonator	8.00M CSA8.00MT	セラミック振動子		03
		KB000420	Fuse	T 2.50A 250V	ヒューズ	J,X,M	01
		KB002680	Fuse	T 2.50A 250V	ヒューズ	U,C	03
		KB000690	Fuse	T 2.50A 250V	ヒューズ	H,B,A	02
		LB201530	Fuse Holder	PC-FH1	ヒューズホルダー		01
		VB312600	Phone Jack	YKB21-5012 BL	ホーンジャック	DAMPER	02
		VH303500	DIN Jack	3P YKF51-50	DINジャック	MIDI IN,OUT	03
*		VI145300	Pin Jack	YKC21-0188	ピンジャック	OPTIONAL IN,OUT	01
		AA058660	Holder,Transistor		トランジスタホルダー		01
*		VH856500	Circuit Board	PN	PNシート		
		IF003450	Diode	1SS133	ダイオード		01
**		VI100100	LED	SLZ-190B-01 RED	LED		01
**		VI099900	Slide Pot.	A10K RS30111A9	スライドボリューム	MASTER VOLUME	03
**		VI049000	Push Switch	SKEVAA	プッシュスイッチ		01
*		NX004200	Circuit Board	HP	HPシート		
		VC694800	Semiconductive Cera. Cap.	0.1μ 25V Z	半導体セラコン		01
		VB835000	Coil	20μ FL5R200QNT	コイル		01
		LB101870	Phone Jack	YKB21-5006	ホーンジャック	PHONES	03
*		VI222600	Circuit Board	AELC-L	AELC-Lシート		
		IF003450	Diode	1SS133	ダイオード		01
*		VI222700	Circuit Board	AELC-H	AELC-Hシート		
		IF003450	Diode	1SS133	ダイオード		01
*		VH856600	Circuit Board	FU	FUシート	J,X,M	

＊：New Parts（新規部品） NR

ランク：Japan Only

	Ref. No.	Part No.	Description		部品名	Remarks	ランク
*		VH856700	Circuit Board	FU	FUシート	U,C	
*		VH856800	Circuit Board	FU	FUシート	H,B,A	
		FI384100	Ceramic Cap.	0.01μ 400V	規格認定コン	(J・C・S・V)	01
		FI494100	Ceramic Cap.	0.01μ 400V	規格認定コン	(J・U・C・S)	01
		FI383470	Ceramic Cap.	4700P 400V	規格認定コン	(J・U・S・V)	01
		VA880100	Ceramic Cap.	4700P 400V	規格認定コン	(U・C・S)	01
		VF616300	Coil	SU10V-D10010	SUコイル		03
		VF370900	Coil	SU10V-10010	コイル	1mH	03
		KB000310	Fuse	T 500mA 250V	ヒューズ	J,X,M	01
		KB001150	Fuse	T 500mA 250V	ヒューズ	U,C	02
		KB000640	Fuse	T 250mA 250V S	ヒューズ	H,B,A	02
		LB201530	Fuse Holder	PC-FH1	ヒューズホルダー		01
		LB202280	Voltage Selector	HXW0131-01-910	電圧切替器	X,M,A	03
*		XG749A00	Power Transformer		電源トランス	J,U,C	10
*		XG557A00	Power Transformer		電源トランス	X,M,A	10
*		XG556A00	Power Transformer		電源トランス	H,B	10
		VD846400	AC Cord	7A 3.05m	電源コード	J	05
		MG001540	AC Cord	10A 3.05m	電源コード	U,C	06
		VE430800	AC Cord	3.5A 3.05m	電源コード	X	05
		MG002080	AC Cord	3.05m	電源コード	M	06
		VD846300	AC Cord	2.5A 3.05m	電源コード	H	05
		VH895700	AC Cord	6.0A 3.05m	電源コード	B	09
		MG002070	AC Cord	3.5m	電源コード	A	06
		VD173100	Push Switch	SDDLA1	プッシュスイッチ	POWER	03
*		XH108A00	Speaker	16cm 8Ω 8.5W	スピーカ		09

＊：New Parts（新規部品）　NR　　ランク：Japan Only

■OVERALL ASSEMBLY

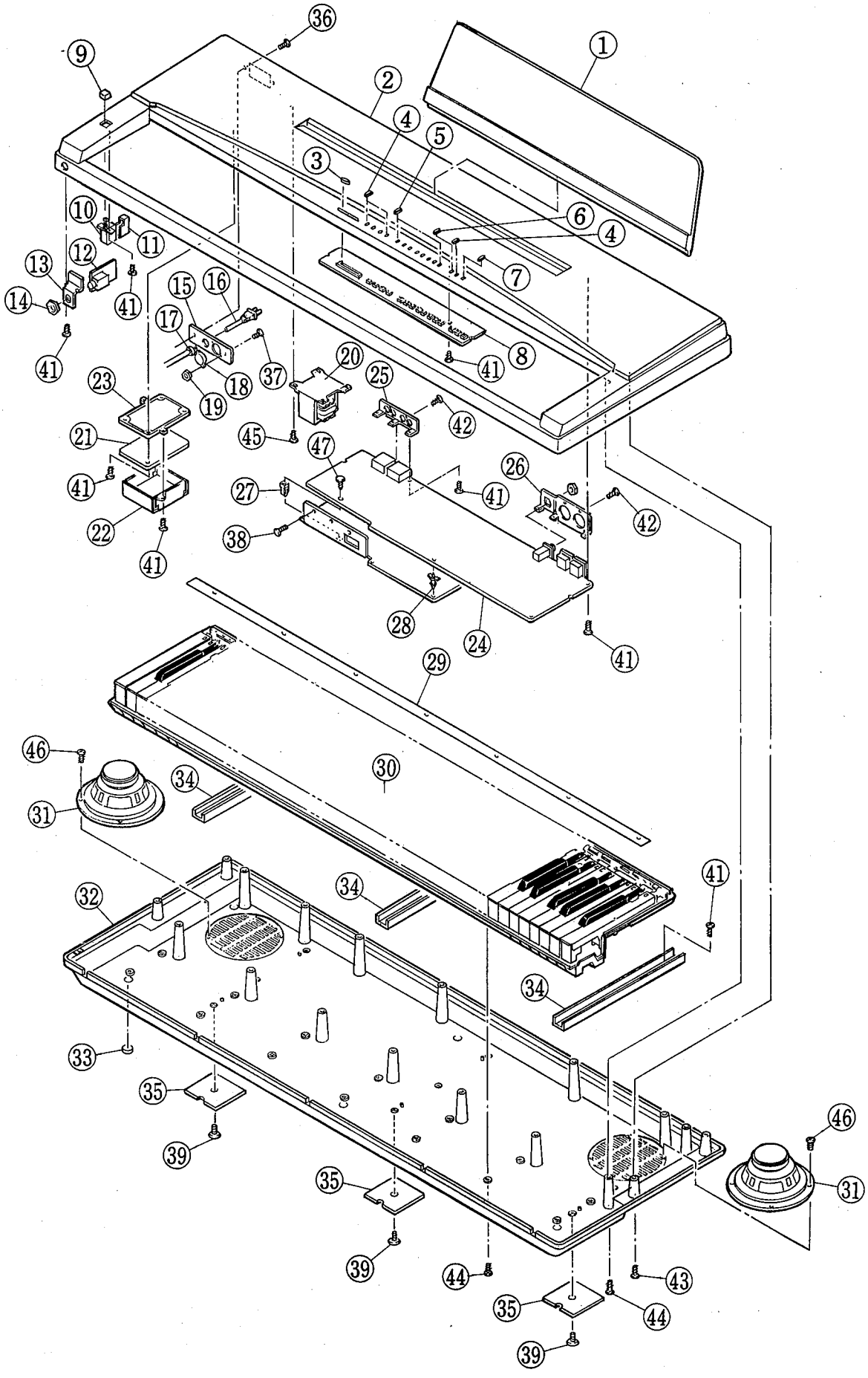

	Ref. No.	Part No.	Description		部品名	Remarks	ランク
*	1	VI010300	Music Rest		譜面板	YPP50	
*	2	VI009300	Upper Case		上ケース		
*	3	VI009500	Slide Knob		スライドツマミ	MASTER VOLUME	
*	4	VI009400	Push Knob	BL	プッシュツマミ	MID.MET.TEM.PLA	01
*	5	VI284300	Push Knob	GY	プッシュツマミ	VOICE SELECTORS	01
*	6	VI272000	Push Knob	RE	プッシュツマミ	REC	01
*	7	VI271800	Push Knob	YE	プッシュツマミ	DEMO	01
*	8	VH856500	Circuit Board	PN	PNシート		
	9	VF663400	Push Knob	BL	プッシュツマミ	POWER	01
	10	VD173100	Push Switch	SDDLA1	プッシュスイッチ	POWER	03
	11	CB049980	Switch Cover	BL	パワースイッチカバー	POWER	01
*	12	NX004200	Circuit Board	HP	HPシート		
*	13	VI030300	Holder,H.P.		HPJ取付金具		02
	14	ET400040	Nut	12X14X2 FCM3BL	管用ナット		01
	15	AA104700	Cord Holder		コード取り付け板	J,U,C,H,B	02
	15	AA105130	Cord Holder		コード取り付け板	X,M,A	04
	16	VD846400	AC Cord	7A 3.05m	電源コード	J	05
	16	MG001540	AC Cord	10A 3.05m	電源コード	U,C	06
	16	VE430800	AC Cord	3.5A 3.05m	電源コード	X	05
	16	MG002080	AC Cord	3.05m	電源コード	M	06
	16	VD846300	AC Cord	2.5A 3.05m	電源コード	H	05
	16	VH895700	AC Cord	6.0A 3.05m	電源コード	B	09
	16	MG002070	AC Cord	3.5m	電源コード	A	06
	17	CB032840	Cord Strain Relief	SR-5N-4	コードストッパー	J,U,C,X,M	01
	17	CB072750	Cord Strain Relief	SR-4N-4	コードストッパー	H,B,A	01
	18	LB202280	Voltage Selector	HXW0131-01-910	電圧切替器	X,M,A	03
	19	EV108030	Hexagonal Nut	φ3 ZMC2Y	フランジ付六角ナット	X,M,A	01
*	20	XG749A00	Power Transformer		電源トランス	J,U,C	10
*	20	XG557A00	Power Transformer		電源トランス	X,M,A	10
*	20	XG556A00	Power Transformer		電源トランス	H,B	10
*	21	VH856600	Circuit Board	FU	FUシート	J,X,M	
*	21	VH856700	Circuit Board	FU	FUシート	U,C	
*	21	VH856800	Circuit Board	FU	FUシート	H,B,A	
*	22	VI273400	Cover,FU Circuit Board		FUシートカバー	U	03
*	23	VI273300	Case,FU Circuit Board		FUシートケース	U	03
*	24	VH856100	Circuit Board	M	Mシート	J,X,M	
*	24	VH856200	Circuit Board	M	Mシート	U,C	
*	24	VH856300	Circuit Board	M	Mシート	H,B,A	
*	25	VI030400	Holder,A-Jack		A-JACK金具		02
*	26	VI030500	Holder,D-Jack		D-JACK金具		02
	27	VD232300	Nut		ｴｸｽﾊﾟﾝｼｮﾝﾅｯﾄ		01
*	28	VH251100	Support	PCB-4L	PCBサポート		01
*	29	VI272500	Felt,MK		MKフェルト		02
*	30	VI232700	Keyboard Assembly	E76 K6	AELC鍵盤 Ass'y		
*	31	XH108A00	Speaker	16cm 8Ω 8.5W	スピーカ		09
*	32	VI251200	Lower Case		下ケース		
	33	CB043750	Foot	BL	ゴム脚		01
*	34	VI010200	Lower Case Frame		下ケース補強金具		03
*	35	VI009800	Washer		ケース座金		02
	36	ED330066	Bind Head Screw	3.0X 6 FCM3BL	バインド小ネジ		01
	37	ED330106	Bind Head Screw	3.0X10 FCM3BL	バインド小ネジ		01
	38	ED030126	Bind Head Screw	3.0X12 ZMC2Y	バインド小ネジ		01
	39	ED360166	Bind Head Screw	6.0X16 ZMC2BL	バインド小ネジ		01
	40	EI030066	Bind Head Tapping Screw	3.0X 6 ZMC2Y	ﾊﾞｲﾝﾄﾞﾀｯﾋﾟﾝｸﾞﾈｼﾞ		01
	41	EI030086	Bind Head Tapping Screw	3.0X 8 ZMC2Y	ﾊﾞｲﾝﾄﾞﾀｯﾋﾟﾝｸﾞﾈｼﾞ		01
	42	EI330086	Bind Head Tapping Screw	3.0X 8 FCM3BL	ﾊﾞｲﾝﾄﾞﾀｯﾋﾟﾝｸﾞﾈｼﾞ		01
	43	EI330106	Bind Head Tapping Screw	3.0X10 ZMC2BL	ﾊﾞｲﾝﾄﾞﾀｯﾋﾟﾝｸﾞﾈｼﾞ		01
	44	EI330146	Bind Head Tapping Screw	3.0X14 ZMC2BL	ﾊﾞｲﾝﾄﾞﾀｯﾋﾟﾝｸﾞﾈｼﾞ		01
	45	EI040086	Bind Head Tapping Screw	4.0X 8 ZMC2Y	ﾊﾞｲﾝﾄﾞﾀｯﾋﾟﾝｸﾞﾈｼﾞ		01
	46	EI040126	Bind Head Tapping Screw	4.0X12 ZMC2Y	ﾊﾞｲﾝﾄﾞﾀｯﾋﾟﾝｸﾞﾈｼﾞ		01
	47	EI340166	Bind Head Tapping Screw	4.0X16 FCM3BL	ﾊﾞｲﾝﾄﾞﾀｯﾋﾟﾝｸﾞﾈｼﾞ		01
			Accessories		付属品		
*	a	VI010300	Music Rest		譜面板		
	b		Top Cover		トップカバー		
	c		Foot Switch	FC-5	フットスイッチFC5		
	d	VI440400	Screw and Cap Set		ネジ・キャップセット		
	d-1	ET400070	Joint Connector	6.0X13 ZMC2BL	ジョイントコネクター	8pcs	01
	d-2	VF778300	Bolt	A 6.0X70 ZMC2BL	連結金具ボルトA	8pcs	01
	d-3	ED360146	Bind Head Screw	6.0X14 ZMC2BL	バインド小ネジ	6pcs	02
	d-4	VA848300	Cap	BL	キャップ（黒）	8pcs	01

＊：New Parts（新規部品）　NR　　ランク：Japan Only

■STAND ASSEMBLY

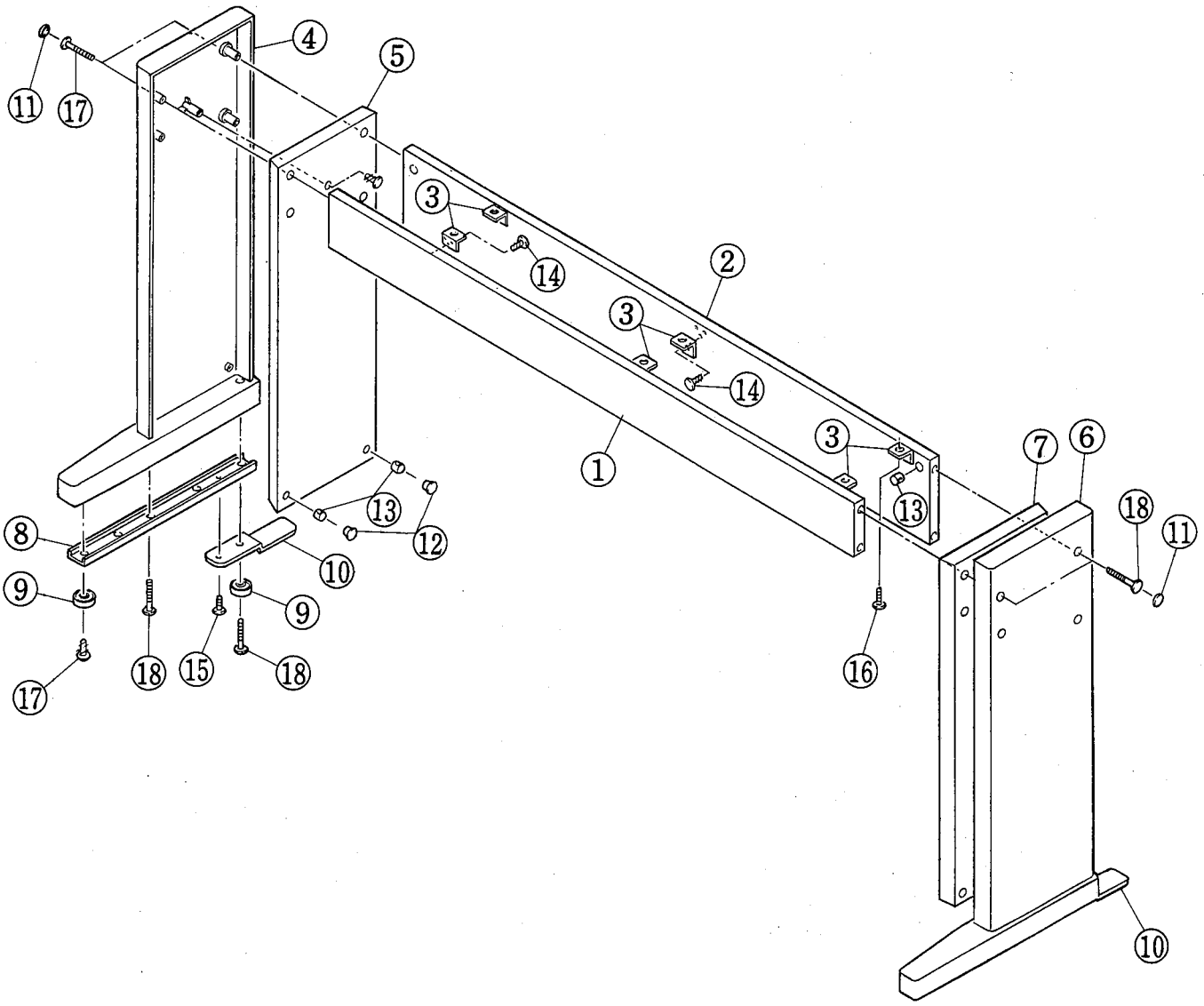

	Ref. No.	Part No.	Description		部品名	Remarks	ランク
			Stand Assembly		スタンドＡｓｓ'ｙ	YPP50	
*	1	VI237500	Front Board		前框		
*	2	VI237600	Back Board		背面框		
*	3	VI009700	Holder		受金具		01
*	4	VI001000	Stand Base	Left	妻土側板　L		
*	5	VH928500	Side Board	Left	側板　L		11
*	6	VI001100	Stand Base	Right	妻土側板　R		
*	7	VH928600	Side Board	Right	側板　R		11
*	8	VI009900	Angle Bracket,Stand Base		妻土金具		03
*	9	VI235200	Foot		スベリ座		
*	10	VI282200	Back Toe		ＵＬバックトゥ	U	04
	11	VA848300	Cap	BL	キャップ（黒）	Bolt	01
	12	VB305200	Cap	BR	キャップ（茶）		01
	13	ET400070	Joint Connector	6.0X13 ZMC2BL	ジョイントコネクター		01
	14	EI335126	Bind Head Tapping Screw	3.5X12 ZMC2BL	ﾊﾞｲﾝﾄﾞﾀｯﾋﾟﾝｸﾞﾈｼﾞ		01
	15	ED040086	Bind Head Screw	4.0X 8 ZMC2Y	バインド小ネジ		01
	16	ED360146	Bind Head Screw	6.0X14 ZMC2BL	バインド小ネジ		02
*	17	VI290400	Trus Head Tapping Screw	6.0X16 ZMC2BL	トラスタッピングネジ		
	18	VF778300	Bolt	A 6.0X70 ZMC2BL	逆結金具ボルトＡ		01

＊：New Parts（新規部品）　NR

ランク：Japan Only

■KEYBOARD ASSEMBLY

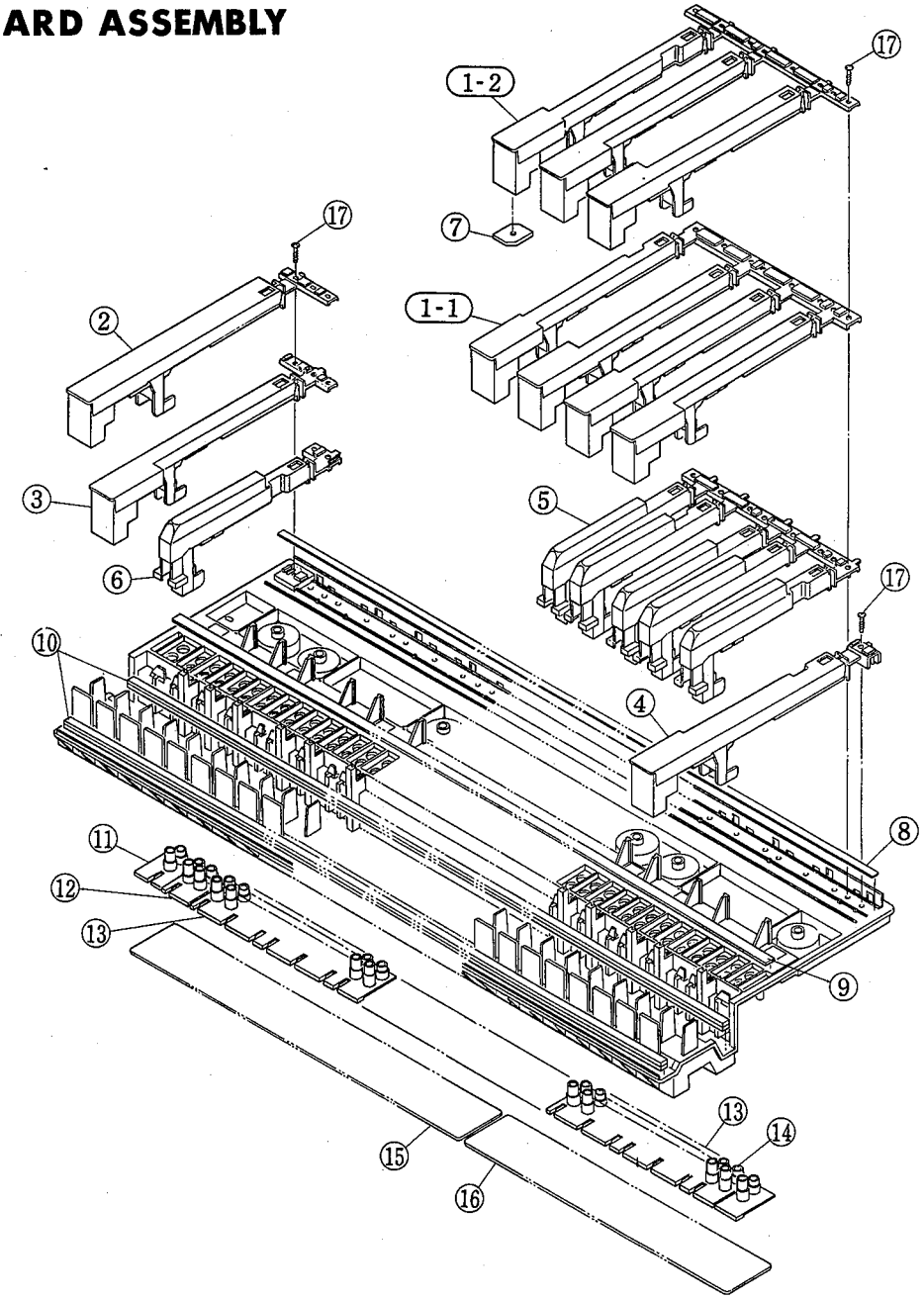

	Ref. No.	Part No.	Description		部品名	Remarks	ランク
*		VI232700	Key Board Assembly	E76 K6	ＡＥＬＣ鍵盤 Ass'y	YPP50	
*	1	VI2327A0	White Key Assembly	GBDF+ACE	白鍵 Ass'y GBDF+ACE	VI21230+VI21240	
	1-1		White Key Assembly	GBDF	白鍵 Ass'y ＧＢＤＦ		
	1-2		White Key Assembly	ACE	白鍵 Ass'y ＡＣＥ		
*	2	VI212500	White Key Assembly	E'	白鍵 Ass'y Ｅ'		
*	3	VI212600	White Key Assembly	F	白鍵 Ass'y Ｆ		
*	4	VI212700	White Key Assembly	G'	白鍵 Ass'y Ｇ'		
*	5	VH941000	Black Key		黒鍵		
*	6	VH941800	Black Key	S	黒鍵 Ｓ		
*	7	VI222400	Key Weight		キーウェイト		01
*	8	VI223200	Rubber Sheet	BL	ゴムシート		
*	9	VI232000	Support Felt		サポートフェルト		02
*	10	VI231900	Stopper Felt		ストッパーフェルト		03
*	11	VI729400	Rubber Contact	E'	接点ゴム Ｅ'		
*	12	VI729500	Rubber Contact	F・F#	接点ゴム Ｆ・Ｆ＃		
*	13	VI223000	Rubber Contact	12KEYS	接点ゴム		
*	14	VI263900	Rubber Contact	1KEY	接点ゴム		
*	15	VI222600	Circuit Board	AELC-L	ＡＥＬＣ－Ｌシート		
*	16	VI222700	Circuit Board	AELC-H	ＡＥＬＣ－Ｈシート		
	17	EI030206	Bind Head Tapping Screw	3.0X20 ZMC2Y	ﾊﾞｲﾝﾄﾞﾀｯﾋﾟﾝｸﾞﾈｼﾞ		01

＊：New Parts (新規部品)　NR　　ランク：Japan Only

■FOOT SWITCH FC-5

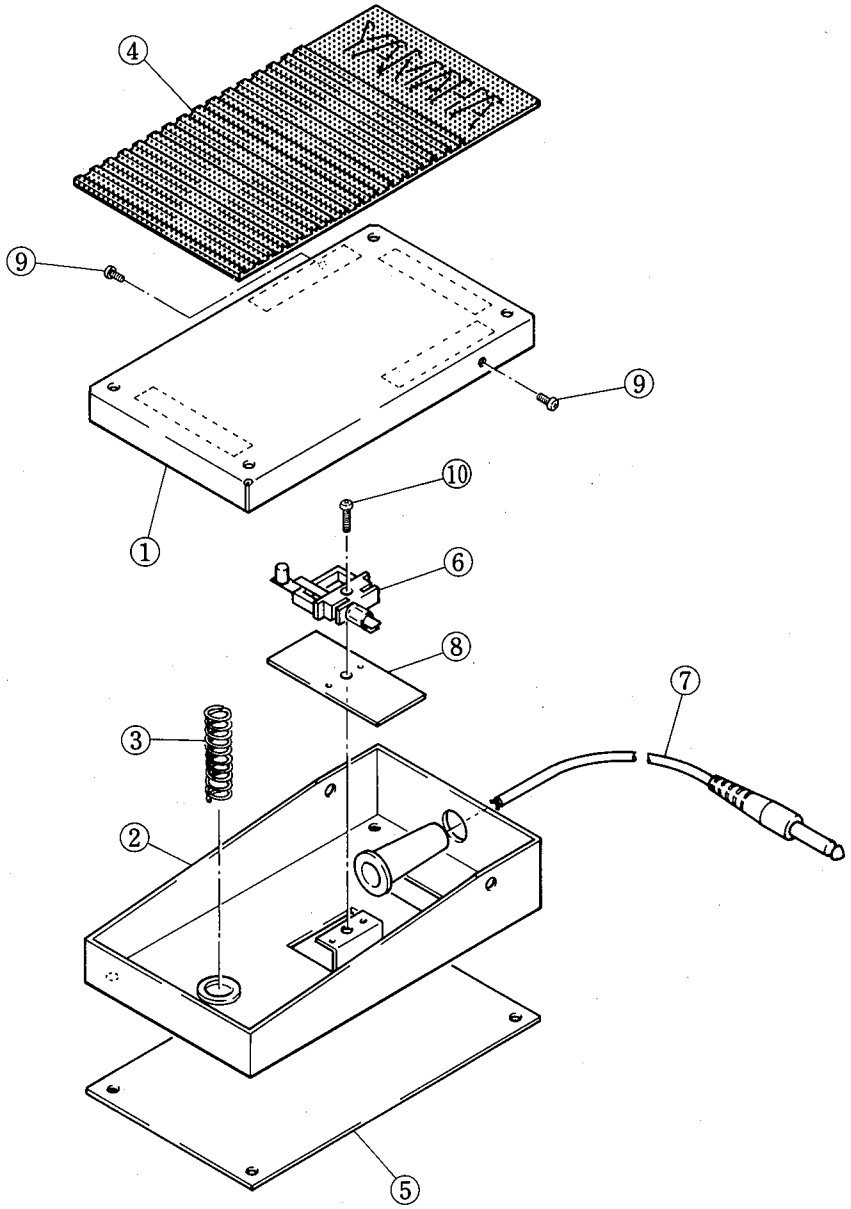

Ref. No.	Part No.	Description		部品名	Remarks	ランク
		Foot Switch	FC-5	フットスイッチ	YPP50	
1	AA812880	Upper Case, Foot Pedal		ペダル上蓋		03
2	AA812890	Bottom Case, Foot Pedal		ペダル底蓋		03
3	AA812900	Pedal Spring		ペダルバネ		01
4	CB815140	Rubber Mat, Upper		上蓋マット		03
5	CB815150	Rubber Mat, Bottom		底蓋マット		03
6	NB037150	Switch Assembly		スイッチアセンブリー		03
7	MI801120	Cord With Phone Plug	1.9m	プラグ付コード		05
8	CA800450	Fiber Washer		ファイバーワッシャー		01
9	EK003520	Bind Head Special Screw	3.0X 6 ZMC2BL	段付小ネジ		01
10	EA030126	Pan Head Screw	3.0X12 ZMC2Y	ナベ小ネジ		01

＊：New Parts（新規部品）　NR

ランク：Japan Only

■YPP-50 OVERALL CIRCUIT DIAGRAM

KEC-12154 △

Notes)
*Circuit Board: PN (VHB56500) XG5598O
1. Diode D 6-14: 1SS133 (F0034500)
2. LED LED 1-11: SLZ-190B-01 RED (V1100100)
3. Push Switch SKEVAA (V0490000)
4. Slide Pot. A10K RS30111A9 (V0999900) MASTER VOLUME

Notes)
*Circuit Board: M (VHB56100) XG55B9O (U, X, MI)
M (VHB56200) XG55B8O (U, C)
M (VHB56300) XG55B8O (H, B, AI)
1. IC
IC 1: HD63B03YP-ORL56P (0H138A00) CPU
HD63B03YP-N (0G2450011) CPU
IC 2: HD63B01YORL46P (XG852A00) SCAN CPU
IC 3: LH5164D-10L (0H178A00) SRAM
IC 5: (XG851A00) MAIN ROM
IC 6: MC74HC139N (8R013970) DECODER
IC 7: TMC3493PH (0F987A00) GEWS
IC 8: (XG853A00) WAVE ROM 4M or (0H139A00) WAVE ROM 4M
IC 9: YM3030 (KG075A00) DAC
IC 10,11: NJM4558S (EG078B00) OP AMP
IC 13: LA4495 (XEB06A00) P AMP 20W 1CH
IC 14: NJM7805FA (KC719001) REGULATOR 5V
IC 15: AN7809 (XB374A00) REGULATOR 9V
IC 16: MC74HC00AN (8R000070) NAND
2. Transistor Array TA 1: TD62554S (VB645300) TA 2: MC1413P (VH441500)
3. Transistor Tr 1,2,5,6: 2SC1740S-R,S (K1740700) Tr 3: 2SA1015 O,Y (9A1015B0)
4. FET FET 1,2: 2SK246 Y (E1026100)
5. Diode D 1-6: 1SS133 (F0034500)
6. Zener Diode ZD 1: RD5.6EB3 5.6V (F0016900) ZD 2: MTZ4.7A 4.7V (F0106500)
7. Diode Stack DB: 4D4B41 4A 200V (H0008700)
8. Ferrite Bead & Coil FB 1: BL02RN1-R62T2 (GE300610) FB2: BL02RN2-R62T2 (GE300670) SBTW: 80μ SBT-0180W (VF456600) SB: 60μ SBT-0260TF (VF968B00)
9. Jacks OPT: YKC21-01BB (AA058660) OPTIONAL IN, OUT PEDAL: YKB21-5012 BL (VB312600) DAMPER MIDI: 5P YKF51-50 (VH303500) MIDI IN, OUT
10. Fuse F2: 2.5A 250V 30 mm (KB000420) J,X,M 2.5A 250V 30 mm (KB002680) U,C 2.5A 250V 20 mm (KB000690) H,B,A
11. Resistor Array RA 1,2: RKC1/8B8 10K J (HZ003200)
12. Photo Coupler PC 1: PC-900V (VG181900)
13. Quartz Crystal Unit CR 1: 12.800M AT-51 (VD323800)
14. Ceramic Resonator CL 1,2: 8.00M CSA8.00MT (QU008500)
15. Gold Cap. & Super Cap. GC: 0.047F 5.5V (VC309100) BACKUP BATTERY or 0.047F 5.5V (VM051000) BACKUP BATTERY
16. Semiconductive Cera. cap. C9,15,16,18,19,21: 0.1μ, 25V Z (VC694800)

17. Cera. cap. Array CA 1,2: 100P 50V M (VH484100) 100PX8

18.

RO1	47K	CO1	K0.22/50	C14	K100/10
RO2	15K	CO2	C470P	C15	C0.1 (+)
RO3	10K	CO3	K100/6.3	C16	C0.1 (+)
RO4	1M	CO4	K220/16	C17	K470/10
RO5	68 Ω ¼W	CO5	K100/6.3	C18	C0.1 (+)
RO6	68 Ω ¼W	CO6	K100/6.3	C19	C0.1 (+)
RO7	68 Ω ¼W	CO7	C0.1 (+)	C20	4700/25
RO8	68 Ω ¼W	CO8	K47/16	C21	C0.1 (+)
FRO1	3.3 Ω ½W	CO9	C0.1 (+)	C22	C1000P
FRO2	3.3 Ω ½W	C10	M0.15	C23	C1000P
FRO3	3.3 Ω ½W	C11	M0.15	C24	C1000P
RB1	560 Ω	C12	M0.01	C25	C1000P
RB2	220 Ω	C13	K220/16	C26	C0.1/500

19.

IC1	XD245001	XH138A00
IC5	XG851A00	X
J2	X	○
J3	○	X

(○: installed X: not installed)

Notes)
*Circuit Board: HP (KK004200) XG688A0
1. Semiconductive Cera. Cap. marked 0.1 (+) 0.1μ 25V Z (VC694800)
2. Coil FL : 20μ FL5R2000NT (VB835000)

Primary widings of the power transformer for each models

British & North European Models	US & Canadian Models	General Export Models
240V RE	120V BR	240V RE
220V BE	100V YE	220V BE
0V GY	0V GY	130V VI
FI: 250mA	FI: 500mA	110V OR
C1: 0.01/400	C1: 0.01/250	0V GY
C2,C3: 0.0047/400	C2,C3: 0.0047/400	FI: 500mA
		C1: 0.01/400
		C2,C3: 0.0047/400

Notes)
*Circuit Board: FU (VHB56800) XG689A0 (J,X,M)
FU (VHB56700) XG689A0 (U,C)
FU (VHB56800) XG689A0 (H,B,A)
1. Coil L 1: SU10V-D10010 (VF615300)
L 2: SU10V-10010 (VF370900) 1mH
2. Ceramic Cap. C 1: 0.01μ 400V (F1384100) (J,C,S,V)
0.01μ 400V (F1494100) (U,C,S)
C 2,3: 4700P 400V (F1383470) (U,E,S,V)
4700P 400V (F1880100) (U,C,S)
3. Fuse F 1: 500mA 250V (KB000310) J,X,M
500mA 250V (KB001150) U,C
250mA 250V (KB000640) H,B,A