DIGITAL PIANO
YDP-323
SERVICE MANUAL



■ **CONTENTS**

SPECIFICATIONS 3
PANEL LAYOUT 4
DISASSEMBLY PROCEDURE 5
LSI PIN DESCRIPTION 15
IC BLOCK DIAGRAM 17
CIRCUIT BOARDS 18
TEST PROGRAM 27
BACKING UP DATA AND INITIALIZING THE SETTINGS 32
TRANSMITTING SONG DATA BETWEEN THE COMPUTER AND YDP-323 33
MIDI IMPLEMENTATION CHART 34
MIDI DATA FORMAT 35
PARTS LIST
BLOCK DIAGRAM
CIRCUIT BOARD LAYOUT & WIRING
OVERALL CIRCUIT DIAGRAM

PK 001744

YAMAHA
HAMAMATSU, JAPAN

Copyright (c) Yamaha Corporation. All rights reserved. PDF-K7901 I.T '05.10

IMPORTANT NOTICE

This manual has been provided for the use of authorized Yamaha Retailers and their service personnel. It has been assumed that basic service procedures inherent to the industry, and more specifically Yamaha Products, are already known and understood by the users, and have therefore not been restated.

WARNING : Failure to follow appropriate service and safety procedures when servicing this product may result in personal injury, destruction of expensive components and failure of the product to perform as specified. For these reasons, we advise all Yamaha product owners that all service required should be performed by an authorized Yamaha Retailer or the appointed service representative.

IMPORTANT : This presentation or sale of this manual to any individual or firm does not constitute authorization, certification, recognition of any applicable technical capabilities, or establish a principal-agent relationship of any form.

The data provided is believed to be accurate and applicable to the unit (s) indicated on the cover. The research engineering, and service departments of Yamaha are continually striving to improve Yamaha products. Modifications are, therefore, inevitable and changes in specification are subject to change without notice or obligation to retrofit. Should any discrepancy appear to exist, please contact the distributor's Service Division.

WARNING : Static discharges can destroy expensive components. Discharge any static electricity your body may have accumulated by grounding yourself to the ground bus in the unit (heavy gauge black wires connect to this bus).

IMPORTANT : Turn the unit OFF during disassembly and parts replacement. Recheck all work before you apply power to the unit.

WARNING : CHEMICAL CONTENT NOTICE !

The solder used in the production of this product contains LEAD. In addition, other electrical/electronic and/or plastic (where applicable) components may also contain traces of chemicals found by the California Health and Welfare Agency (and possibly other entities) to cause cancer and/or birth defects or other reproductive harm.

DO NOT PLACE SOLDER, ELECTRICAL/ELECTRONIC OR PLASTIC COMPONENTS IN YOUR MOUTH FOR ANY REASON WHAT SO EVER!

Avoid prolonged, unprotected contact between solder and your skin! When soldering, do not inhale solder fumes or expose eyes to solder/flux vapor!

If you come in contact with solder or components located inside the enclosure of this product, wash your hands before handling food.

■ WARNING

Components having special characteristics are marked ⚠ and must be replaced with parts having specification equal to those originally installed.

■ SAVING DATA

Saving and backing up your data

- Data in the instrument's internal memory can be lost due to operational errors or malfunction. Be sure to save any important data to external media via a computer connected to the instrument.

■ SPECIFICATIONS

Item	YDP-323
Keyboard	88 keys (A-1 - C7)
Sound Source	AWM Stereo Sampling
Polyphony	64 Notes Max.
Voice Selection	10
Effect	Reverb
Volume	Master Volume
Controls	Dual, Metoronome, Transpose
Pedal	Damper, Sostenuto, Soft
Demo Songs	10 Demo Songs, 50 Piano Preset Songs
Recording Function	One song 65 KB (approx. 11,000 notes)
Loading song data from a computer	Up to 10 songs; Total maximum size 352 KB
Jacks/Connectors	MIDI (IN/OUT), PHONES x 2
Main Amplifiers	20W x 2
Speakers	Oval (12cm x 6cm) x 2
Dimensions (W x D x H) (with music rest)	1357mm x 420mm x 814mm [53-3/8" x 16-1/2" x 32-1/16"] (1357mm x 420mm x 987mm [53-3/8" x 16-1/2" x 38-7/8"])
Weight	41kg (90lbs., 6oz)
Accessories	Owner's Manual, "50 greats for the Piano" (Music Book), Bench (included or optional depending on locale), Quick Operation Guide, Headphone hanger set, AC cord, Assembly parts

● Options

BC-100 Bench

UX16 (USB-MIDI interface)

■ PANEL LAYOUT

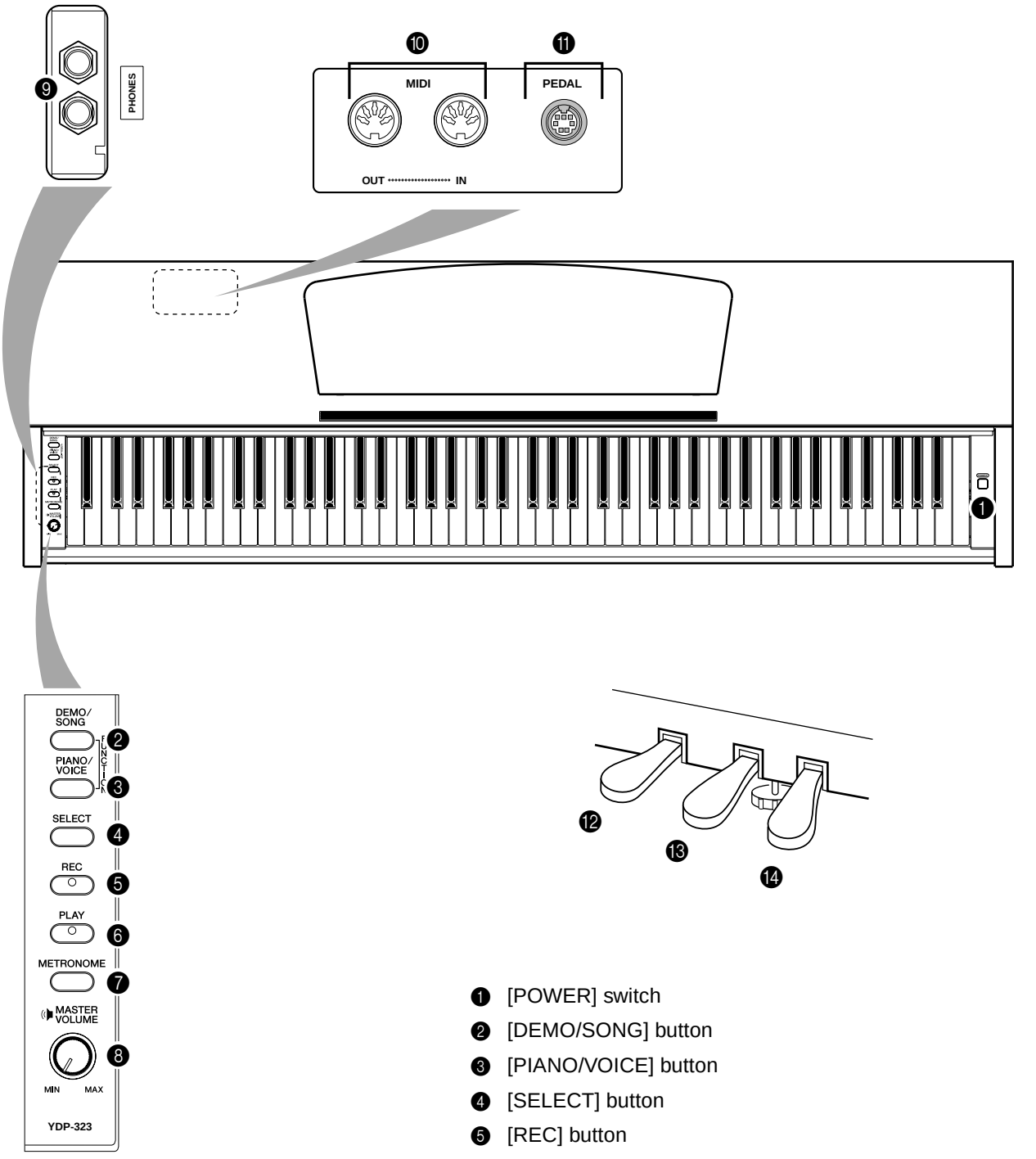

❶ [POWER] switch
❷ [DEMO/SONG] button
❸ [PIANO/VOICE] button
❹ [SELECT] button
❺ [REC] button
❻ [PLAY] button
❼ [METRONOME] button
❽ [MASTER VOLUME] dial
❾ [PHONES] jacks
❿ MIDI [IN] [OUT] terminals
⓫ [PEDAL] terminal
⓬ Soft pedal (left)
⓭ Sostenuto pedal (center)
⓮ Damper pedal (right)

■ DISASSEMBLY PROCEDURE

Caution:

Be sure to attach the removed filament tape just as it was before removal.

1. Headphone Hanger

(Time required: About 1 minute)

Remove the two (2) screws marked [11b]. The headphone hanger can then be removed. (Fig. 1)

2. Music Rest Assembly

(Time required: About 1 minute)

Remove the four (4) screws marked [S10]. The music rest assembly can then be removed. (Fig. 2)

3. Top Board Assembly

(Time required: About 1 minute)

3-1 Close the key cover.

3-2 Remove the three (3) screws marked [S09]. (Fig. 3)

3-3 Slide the top board assembly forward and lift it out.

4. Back Board (Time required: About 1 minute)

Remove the screw marked [5bA], the screw marked [5bB] and the four (4) screws marked [5d]. The back board can then be removed. (Fig. 3)

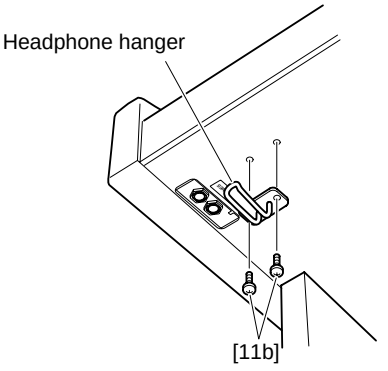

[11b]: Truss Head Screw 4.0X10 MFZN2BL (WF000800)

Fig. 1

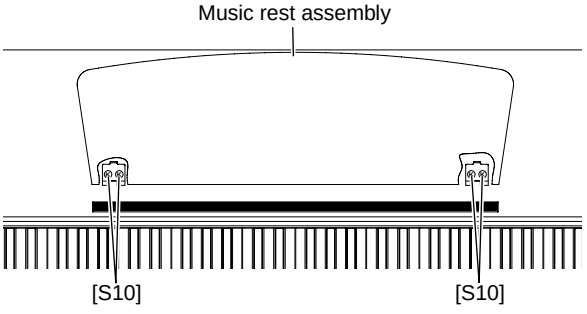

[S10]: Bind Head Tapping Screw-1 3.0X16 MFZN2B3(WE971200)

Fig. 2

<Rear view>

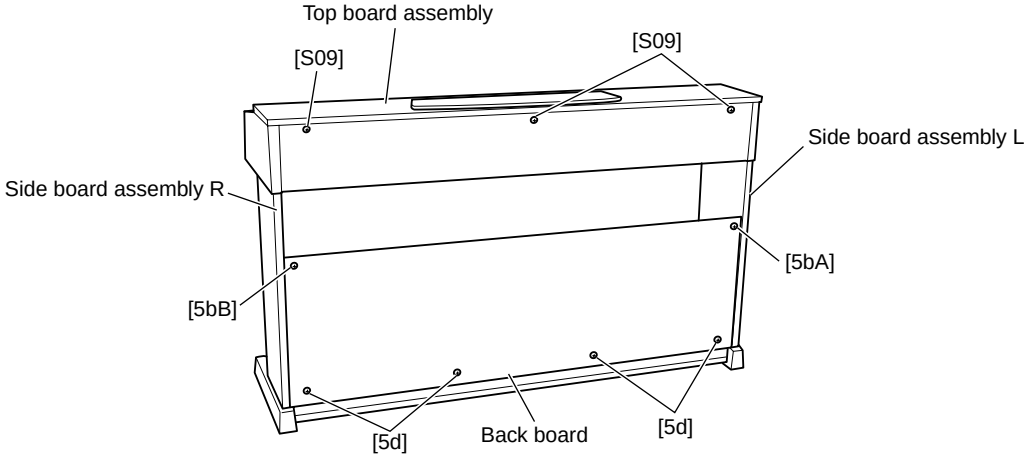

[5b]: Truss Head Screw 4.0X12 MFZN2B3 (WE997700)
[5d]: PW Head Tapping Screw-1 4.0X20 MFZN2B3 (WE998900)
[S09]: Truss Head Screw 4.0X16 MFZN2B3 (WE977600)

Fig. 3

5. Circuit Boards & Assemblies (Main Unit)

(Time required: About 3 minutes each)

5-1 Remove the top board assembly. (See procedure 3)

5-2 Each circuit board and assembly can be removed by removing its fixing screws as listed below.

Circuit board and Assembly	Ref. No.	Screw	QTY	Fig.
DM	S12A	Bind Head Tapping Screw-B 3.0X6 MFZN2W3 (WE936300)	4	4
MAEQ	S12B	Bind Head Tapping Screw-B 3.0X6 MFZN2W3 (WE936300)	6	4
PS Cover Assembly	103A	Bind Head Tapping Screw-1 3.5X12 MFZN2W3 (WE970900)	5	4
Power Supply Unit	103B	Bind Head Tapping Screw-1 3.5X12 MFZN2W3 (WE970900)	3	4
D-JACK Assembly	S13A	Bind Head Tapping Screw-1 3.5X12 MFZN2W3 (WE970900)	4	4
Speaker L	S07A	Truss Head Tapping Screw-1 4.0X16 MFZN2Y (WE965700)	4	4
Speaker R	S07B	Truss Head Tapping Screw-1 4.0X16 MFZN2Y (WE965700)	4	4

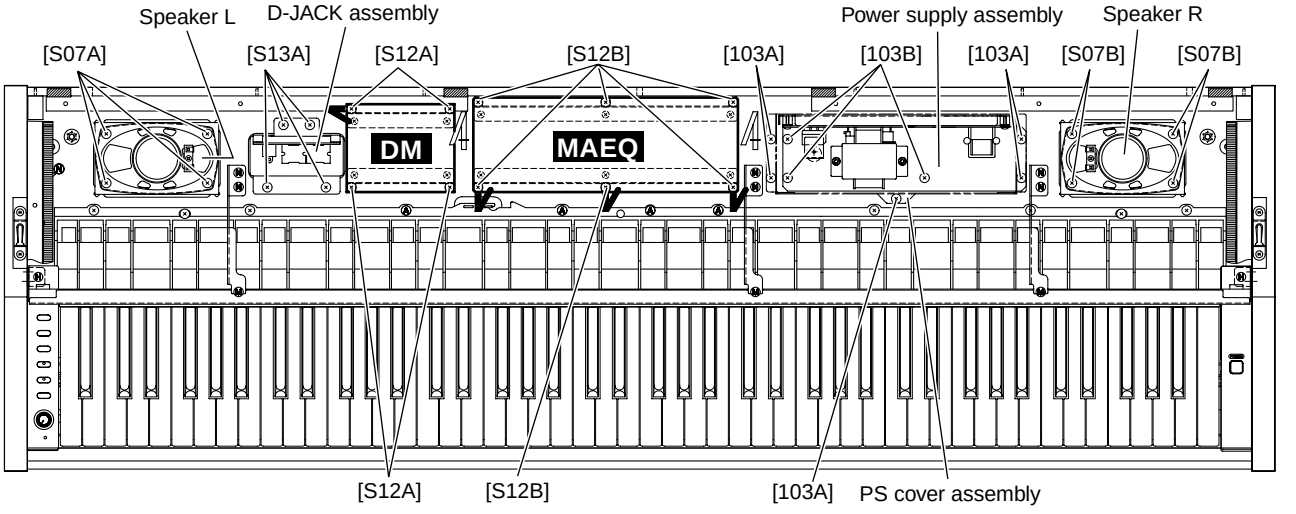

Fig. 4

6. PS Circuit Board, Power Transformer

(Time required: About 5 minutes)

6-1 Remove the top board assembly. (See procedure 3)

6-2 Remove the power supply unit. (See procedure 5)

6-3 Remove the three (3) screws marked [6], the two (2) screws marked [7A] and the two (2) screws marked [1]. The PS circuit board can then be removed from the AC inlet plate. (Fig. 5)

6-4 **Power Transformer**

Using the soldering iron, remove the seventeen soldered place of the power transformer on the PS circuit board. The power transformer can then be removed from the PS circuit board. (Fig. 5-1)

* ***While soldering, be careful not to apply too much heat. It might cause peeling off the land pattern.***

● **Power Supply Unit**

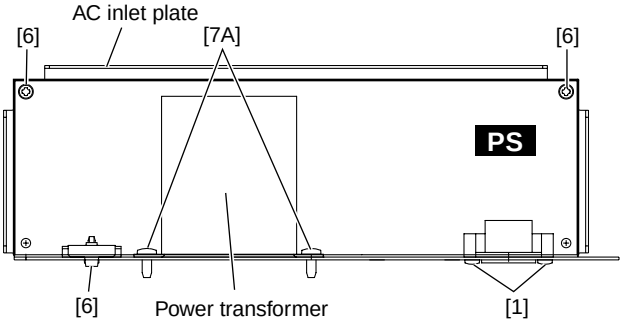

[1]: Bind Head Tapping Screw-B 3.0X10 MFZN2B3 (WE972200)
[6]: Bind Head Tapping Screw-B 3.0X12 MFZN2W3 (WE987400)
[7A]: Bind Head Tapping Screw-B 4.0X10 MFZN2B3 (WE972300)

Fig. 5

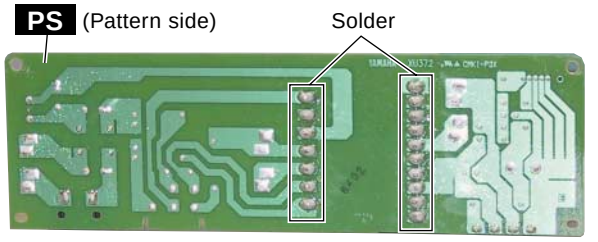

Fig. 5-1

7. DJACK Circuit Board

(Time required: About 3 minutes)

7-1 Remove the top board assembly. (See procedure 3)
7-2 Remove the D-JACK assembly. (See procedure 5)
7-3 Remove the three (3) screws marked [3A] and the two (2) screws marked [4]. The DJACK circuit board can then be removed from the D-JACK angle. (Fig. 6)

● **D-JACK Assembly**
<Bottom view>

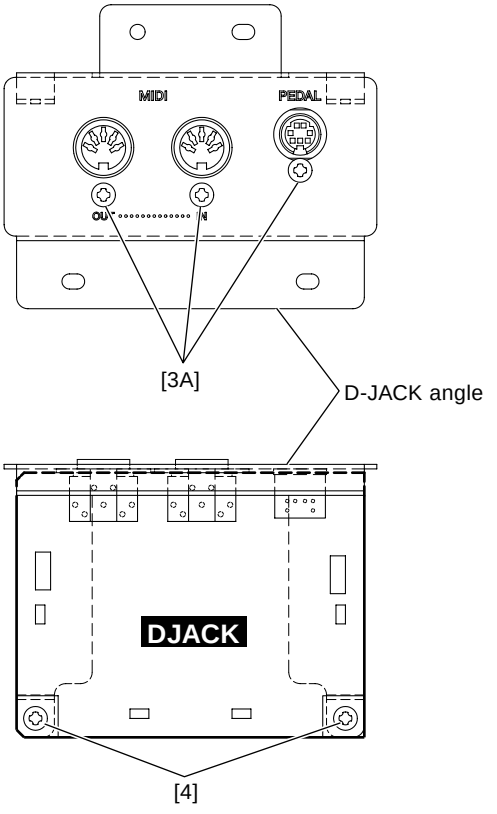

[3A]: Bind Head Tapping Screw-B 3.0X8 MFZN2B3 (WE774400)
[4]: Bind Head Tapping Screw-B 3.0X8 MFZN2W3 (WE774300)

Fig. 6

8. Key Cover Assembly

(Time required: About 2 minutes)

8-1 Close the key cover.
8-2 Remove the top board assembly. (See procedure 3)
8-3 Lift the rear key cover assembly. (Fig. 7)
8-4 Lean slightly the key cover assembly so that the guide pin can be removed from the guide rail. (Fig. 7-1)

* ***When removing, be sure not to nake scratches on the side cover.***

* ***When reinstalling the key cover assembly, apply a masking shield tape around the guide rail to prevent from making scratches on the assembly.***

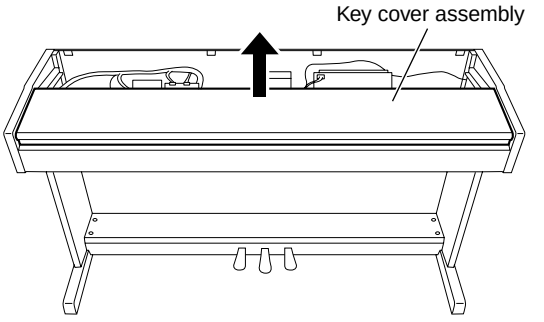

Fig. 7

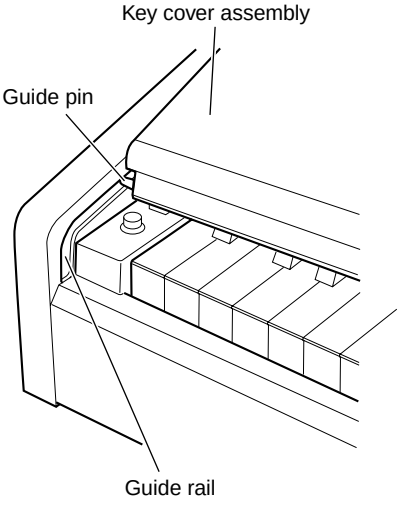

Fig. 7-1

9. Rack (L, R)

(Time required: About 3 minutes each)

9-1 Remove the top board assembly. (See procedure 3)
9-2 Remove the key cover assembly. (See procedure 8)
9-3 Remove the three (3) screws marked [S06]. The rack L can then be removed. (Fig. 8)
* ***The left and right rack can then be removed in the same manner.***

<Left side view>

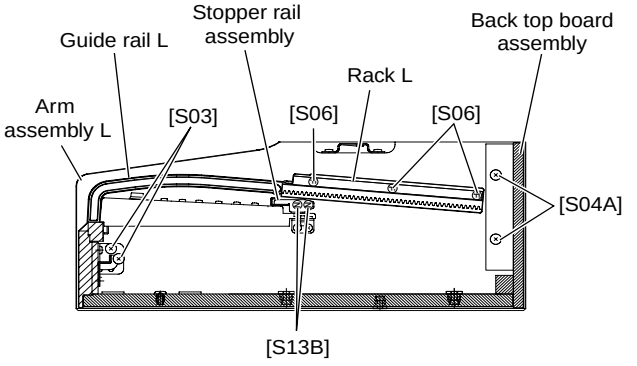

[S03]: Bind Head Tapping Screw-1 3.5X16 MFZN2W3 (WE970700)
[S04A]: Truss Head Tapping Screw-1 3.5X25 MFZN2W3 (WE970200)
[S06]: Bind Head Tapping Screw-1 3.5X20 MFZN2W3 (WE971500)
[S13B]: Bind Head Tapping Screw-1 3.5X12 MFZN2W3 (WE970900)

Fig. 8

10. Stopper Rail Assembly

(Time required: About 5 minutes)

10-1 Remove the top board assembly. (See procedure 3)
10-2 Remove the key cover assembly. (See procedure 8)
10-3 Remove the rack L and R. (See procedure 9)
10-4 Remove the two (2) screws marked [S13B] each from both sides of the assembly. (Fig. 8)
10-5 Remove the six (6) screws marked [S13C] . The stopper rail assembly can then be removed. (Fig. 9)

11. End Block Assembly (L, R)

(Time required: About 5 minutes)

11-1 Remove the top board assembly. (See procedure 3)
11-2 Remove the key cover assembly. (See procedure 8)
11-3 Remove the rack L and R. (See procedure 9)
11-4 Remove the stopper rail assembly. (See procedure 10)
11-5 Remove the screw marked [S08]. (Fig. 9)
11-6 Slide the end block assembly L backward and lift it out.
* ***The left and right end block assembly can then be removed in the same manner.***

12. Keyboard Assembly

(Time required: About 10 minutes)

12-1 Remove the top board assembly. (See procedure 3)
12-2 Remove the key cover assembly. (See procedure 8)
12-3 Remove the rack L and R. (See procedure 9)
12-4 Remove the stopper rail assembly. (See procedure 10)
12-5 Remove the end block assembly L and R. (See procedure 11)
12-6 Remove the nine (9) screws marked [S01] and the two (2) screws marked [S02]. The keyboard assembly can then be removed. (Fig. 9)

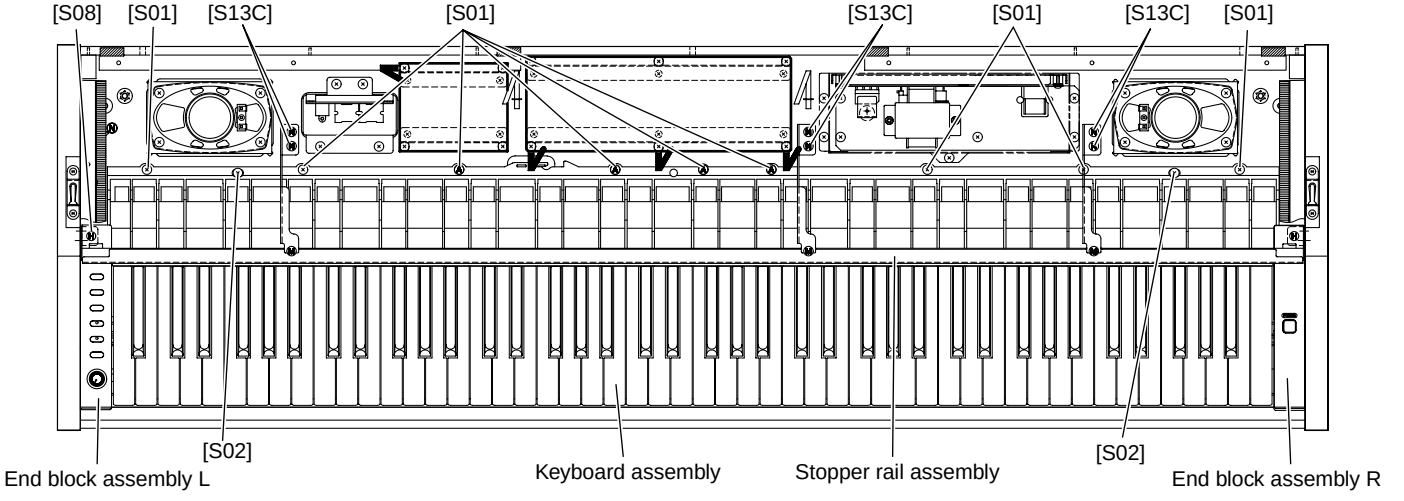

[S01]: Pan Head Screw 5.0X25 MFZN2W3 SW (WF001500)
[S02]: Bind Head Tapping Screw-1 4.0X14 MFZN2W3 (WE971900)
[S08]: Bind Head Tapping Screw-B 4.0X10 MFZN2W3 (WE974500)
[S13C]: Bind Head Tapping Screw-1 3.5X12 MFZN2W3 (WE970900)

Fig. 9

13. MVR Circuit Board, PANEL Circuit Board

(Time required: About 7 minutes each)

13-1 Remove the top board assembly. (See procedure 3)
13-2 Remove the key cover assembly. (See procedure 8)
13-3 Remove the rack L and R. (See procedure 9)
13-4 Remove the stopper rail assembly. (See procedure 10)
13-5 Remove the end block assembly L. (See procedure 11)
13-6 **MVR Circuit Board**
Remove the three (3) screws marked [9A]. The MVR circuit board can then be removed. (Fig. 10)
13-7 **PANEL Circuit Board**
Remove the six (6) screws marked [9B]. The PANEL circuit board can then be removed. (Fig. 10)

● **End Block Assembly L**

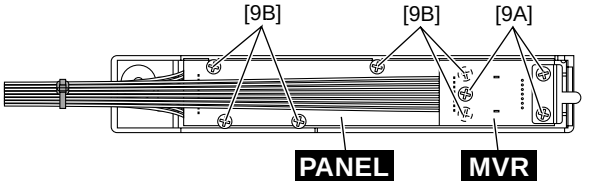

[9]: Bind Head Tapping Screw-B 3.0X8 MFZN2W3 (WE774300)

Fig. 10

14. Power Switch Assembly

(Time required: About 7 minutes)

14-1 Remove the top board assembly. (See procedure 3)
14-2 Remove the key cover assembly. (See procedure 8)
14-3 Remove the rack L and R. (See procedure 9)
14-4 Remove the stopper rail assembly. (See procedure 10)
14-5 Remove the end block assembly R. (See procedure 11)
14-6 Remove the two (2) screws marked [30]. The power switch assembly can then be removed. (Fig. 11)

● **End Block Assembly R**

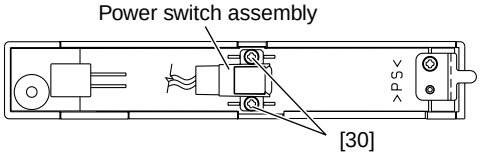

[30]: Bind Head Tapping Screw-B 3.0X8 MFZN2W3 (WE774300)

Fig. 11

15. HP Circuit Board

(Time required: About 6 minutes)

15-1 Remove the top board assembly. (See procedure 3)
15-2 Remove the key cover assembly. (See procedure 8)
15-3 Remove the rack L and R. (See procedure 9)
15-4 Remove the stopper rail assembly. (See procedure 10)
15-5 Remove the end block assembly L. (See procedure 11)
15-6 Remove the two (2) hexagonal nuts marked [3B]. The HP circuit board can then be removed. (Fig. 12)

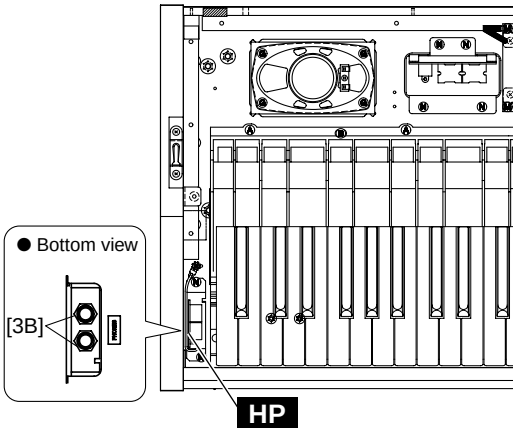

[3B]: Hexagonal Nut 12X14X2 P=1.0 (WF559900)

Fig. 12

16. PL Circuit Board

(Time required: About 10 minutes)

16-1 Remove the top board assembly. (See procedure 3)
16-2 Remove the key cover assembly. (See procedure 8)
16-3 Remove the rack L and R. (See procedure 9)
16-4 Remove the stopper rail assembly. (See procedure 10)
16-5 Remove the end block assembly L and R.
(See procedure 11)
16-6 Remove the keyboard assembly. (See procedure 12)
16-7 Remove the screw marked [T2f]. The PL circuit board can then be removed. (Fig. 13)

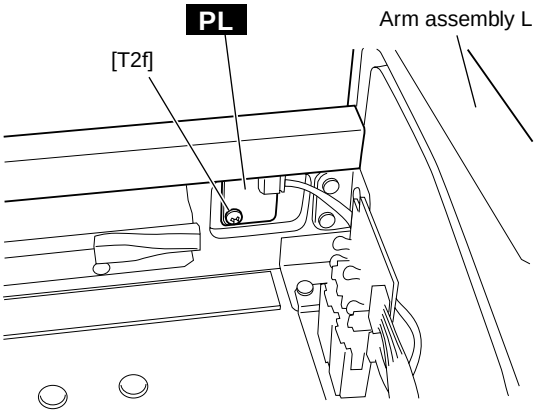

[T2f]: Bind Head Tapping Screw-1 3.5X12 MFZN2W3 (WE970900)

Fig. 13

17. Back Top Board Assembly

(Time required: About 3 minutes)

17-1 Remove the top board assembly. (See procedure 3)
17-2 Remove the two (2) screws marked [S04A] each from both sides of the assembly. (Fig. 8)
17-3 Remove the six (6) screws marked [S04B]. The back top board assembly can then be removed. (Fig. 14)

18. Main Unit

(Time required: About 3 minutes)

18-1 Spread a soft cloth like a blanket on the floor where the main unit is to be placed in advance.
18-2 Remove the headphone hanger. (See procedure 1)
18-3 Disconnect the AC cord and the PK-LF cable. (Fig. 15)
18-4 Remove the four (4) screws marked [5c]. (Fig. 16)
18-5 Move the main unit backward, lift it and place it on the cloth gently. (Fig. 17)

* ***For safety, this work should be done by two persons.***

<Bottom view>

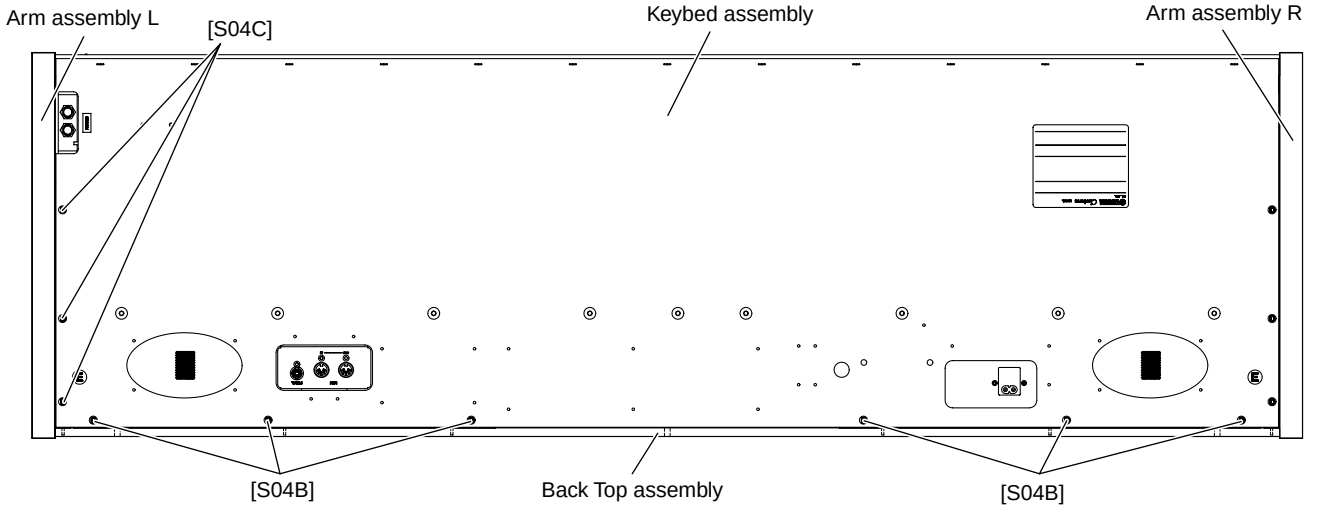

[S04]: Truss Head Tapping Screw-1 3.5X25 MFZN2W3 (WE970200)

Fig. 14

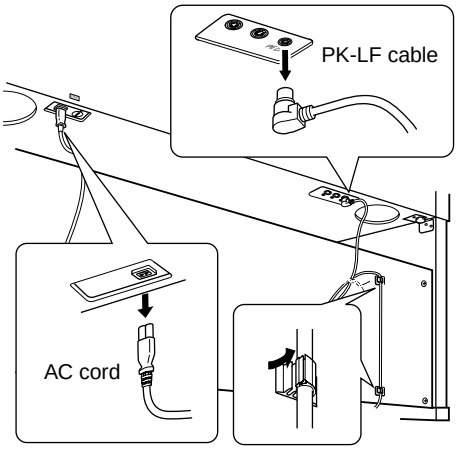

Fig. 15

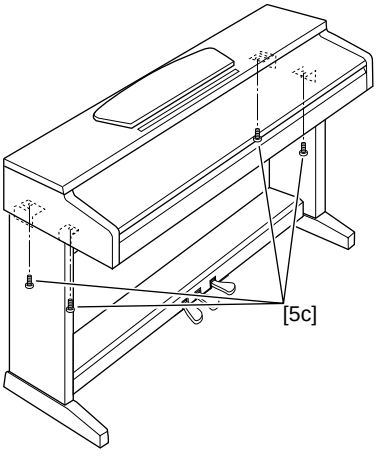

[5c]: Bind Head Screw 6.0X16 MFZN2B3 (WE969400)

Fig. 16

⚠ **CAUTION**
Do not hold the key cover or top portion.
For safety, this work should be done by two persons.

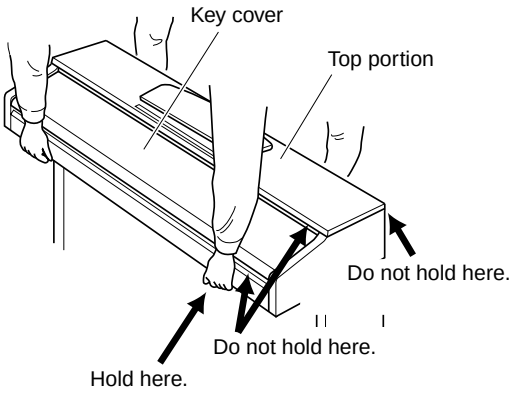

Fig. 17

19. Arm Assembly (L, R)

(Time required: About 15 minutes)

19-1 Remove the top board assembly. (See procedure 3)
18-2 Remove the key cover assembly. (See procedure 8)
19-3 Remove the rack L and R. (See procedure 9)
19-4 Remove the stopper rail assembly. (See procedure 10)
19-5 Remove the end block assembly L and R. (See procedure 11)
19-6 Remove the keyboard assembly. (See procedure 12)
19-7 Remove the main unit. (See procedure 18)
(Parts removed in Steps 19-1 through 19-6 are component parts of the main unit.)
19-8 Remove the two (2) screws marked [S04A] and the tow (2) screws marked [S03]. (Fig. 8)
19-9 Remove the three (3) screws marked [S04C]. The arm assembly L can then be removed. (Fig. 14)

* ***The arm assembly R can then be removed in the same manner.***

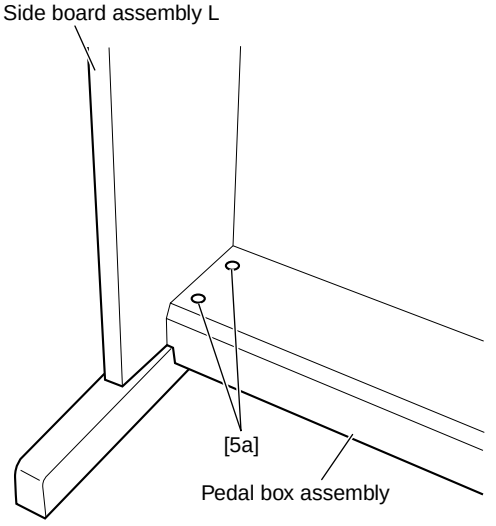

[5a]: Truss Head Screw 6.0X20 MFZN2B3 (WF001300)

Fig. 18

20. Side Board Assemble (L, R)

(Time required: About 4 minutes)

20-1 Remove the headphone hanger. (See procedure 1)
20-2 Disconnect the AC cord and the PK-LF cable. (Fig. 15)
20-3 Remove the main unit. (See procedure 18)
20-4 Remove the screw marked [5bA] and the two (2) screws marked [5a]. The side board assembly L can then be removed. (Fig. 3, 18)

* ***The side board assembly R can then be removed in the same manner.***

21. Stand Base (Time required: About 3 minutes)

21-1 With a soft cloth like a blanket placed on the floor, place the main unit on its back board gently.

* ***For safety, this work should be done by two persons.***

21-2 Put thick books or the like under the main unit at both sides.
21-3 Remove the three (3) screws marked [3C]. The left stand base can then be removed. (Fig. 19)

* ***The right stand base can then be removed in the same manner.***

22. Pedal Box Assembly, Pedal Assembly

(Time required: About 5 minutes)

22-1 Disconnect the PK-LF cable. (Fig. 15)
22-2 Remove the four (4) screws marked [5d]. (Fig. 3)
22-3 Remove the two (2) screws marked [5a] each from both sides of the assembly. The pedal box assembly can then be removed. (Fig. 18)
22-4 Remove the eight (8) screws marked [7B] and the screw marked [8]. The pedal assembly can then be removed. (Fig. 20)

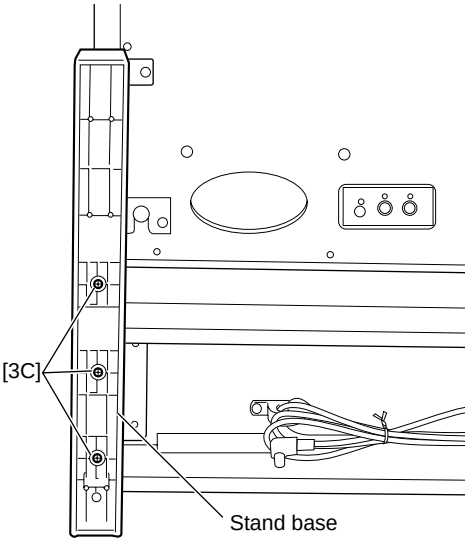

[3C]: Pan Head Tapping Screw-1 4.0X65 MFZN2W3 (WF514200)

Fig. 19

● **Pedal Box Assembly**

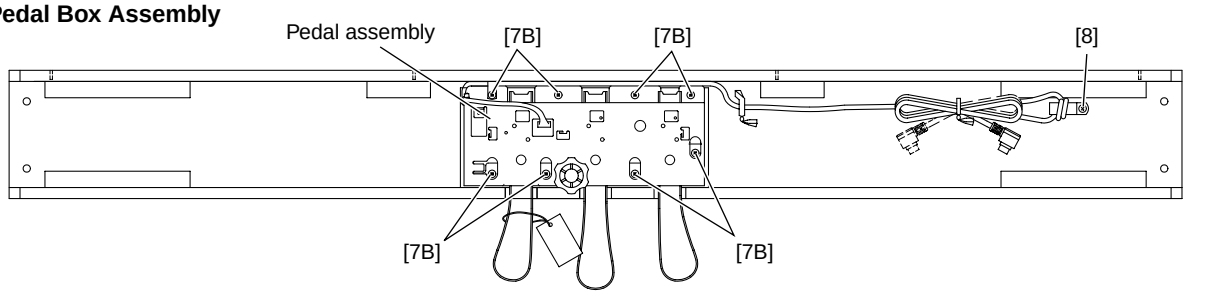

[7B]: Bind Head Tapping Screw-1 4.0X14 MFZN2W3 (WE971900)
[8]: Truss Head Tapping Screw-1 4.0X12 MFZN2W3 (WF745900)

Fig. 20

23. Disassembling the Keyboard

* ***After inserting a round stick (Rod: TX000670) between the frame and the keys, remove the circuit boards. (Fig. 21)***

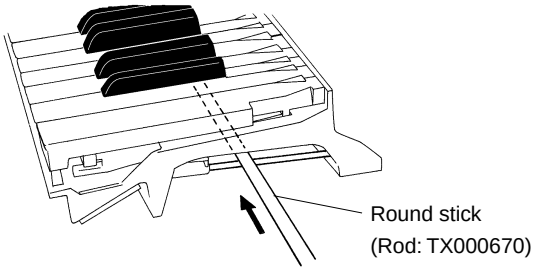

Fig. 21

23-1 **GHD EBUS L, MK SUB Circuit Board**

Remove the seven (7) screws marked [260A]. The GHD EBUS L and MK SUB circuit boards can then be removed. (Fig. 22, 22-1)

23-2 **GHD M Circuit Board**

Remove the five (5) screws marked [260B] and the screw marked [262]. The GHD M circuit board can then be removed. (Fig. 22)

23-3 **GHD H Circuit Board**

Remove the four (4) screws marked [260C] and the screw marked [262]. The GHD H circuit board can then be removed. (Fig. 22)

* ***Keys can be removed without removing the circuit boards.***

* ***After removing the GHD EBUS L, GHD M and GHD H circuit boards, and the rubbers can then be removed.***

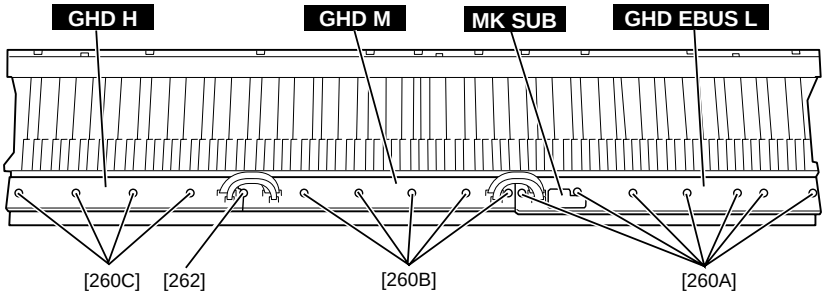

[260]: Bind Head Tapping Screw-P 3.0x10 MFZN2 (VT413400) or
Bind Head Tapping Screw-P 3.0x10 MFZN2W3 (WF001000)
[262]: PW Head Tapping Screw-P 3.0x10-10 ZMC2W3 (WF765500)

Fig. 22

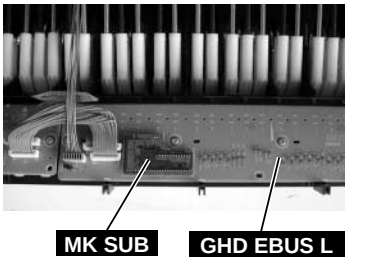

Fig. 22-1

23-4 **Rubber contact**

Remove the GHD circuit board for the involved key. The rubber contacts can then be removed. (Fig. 23, 24)

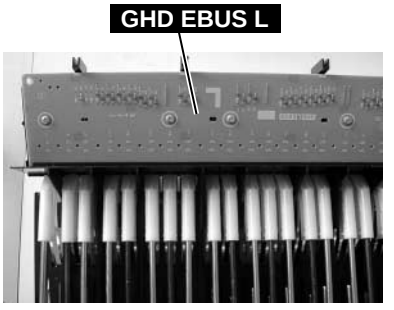

Fig. 23

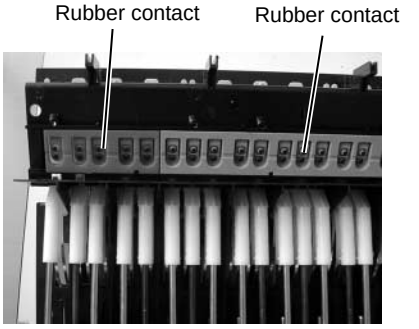

Fig. 24

23-5 **White key**

In order to release the white key from the stopper, insert a thin plate between the white keys (gap in the direction indicated by the triangle mark, near the fulcrum of the key), press down the stopper marked [A] and move the white key forward. Then the white key being released from the stopper lifts up. (Fig. 25, 26)

* ***Use special care not to move the white key forward so much as to cause damage to the key spring.***

23-6 In this state, move the white key rearward a little. Then the white key can be removed. (Fig. 26)

23-7 **Black key**

The black key can be removed after the white keys on either side have been removed.

23-8 **Hammer, White Key**

After a key has been removed, push a key spring down once to take it out of the hook. (Fig. 27)

Place the keyboard assembly upside-down and peel the stopper away. The hammer of the white key can then be removed. (Fig. 28)

* ***The hammer of the black key can then be removed in the same manner.***

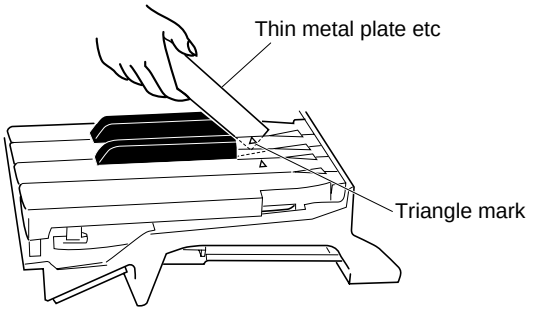

Fig. 25

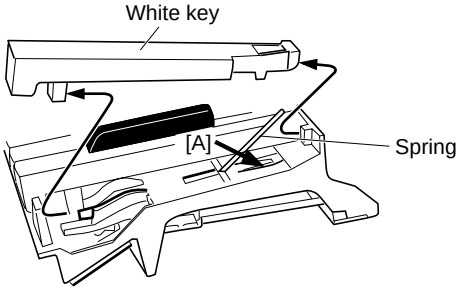

Fig. 26

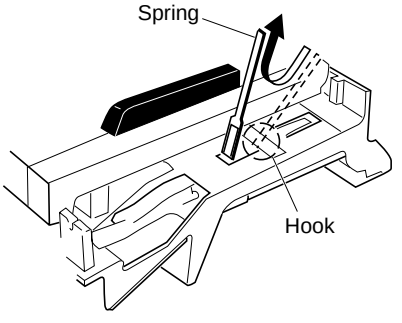

Fig. 27

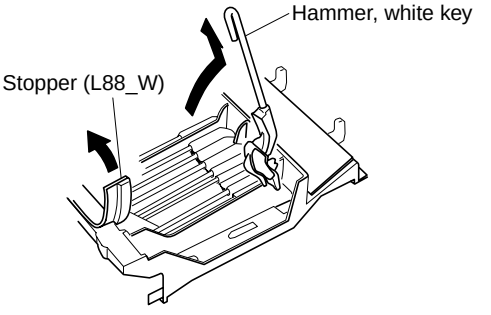

Fig. 28

24. Assembling the Keyboard

24-1 **Hammer, White Key (Hammer, Black Key)**
Place the keyboard assembly upside-down, insert a hammer assembly into the frame, and put the stopper (L88_W) on. (Fig. 29)

* ***There are four (4) kinds of hammers that differ in weight.***

24-2 **Spring**
Place the keyboard assembly rightside up. Fix key springs on the frame by setting one at each slit and pushing down once on each key spring. (Fig. 30)

* ***Be careful of the direction of the spring. It should be installed with its projecting end facing upward. (Fig. 30-1)***

24-3 **Assembling the White Key (Black Key)**
After a key has been fit to part [C] and key guide, make sure that the spring is fixed to the key and then press down part [B] of the key. (Fig. 31)

24-4 **GHD EBUS L, MK SUB Circuit Board**
Tighten the seven (7) screws marked [260A] to fix the GHD EBUS L, MK SUB circuit boards. (Fig. 22)

24-5 **GHD M Circuit Board**
Tighten the five (5) screws marked [260B] and the screw marked [262] to fix the GHD M circuit board. (Fig. 22)

24-6 **GHD H Circuit Board**
Tighten the four (4) screws marked [260C] and the screw marked [262] to fix the GHD H circuit board. (Fig. 22)

* ***When installing the circuit boards, set it under hooks to align the triangle marks of the circuit board and projection parts of the frame as shown in figure 32.***

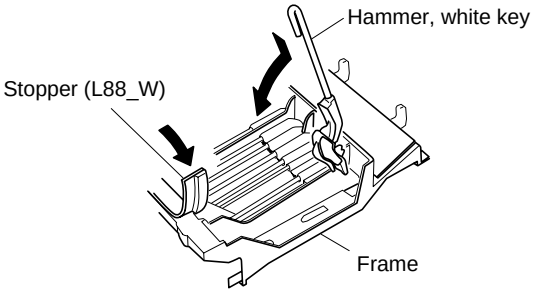

Fig. 29

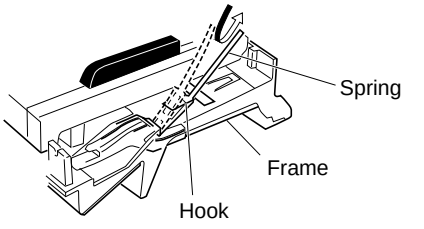

Fig. 30

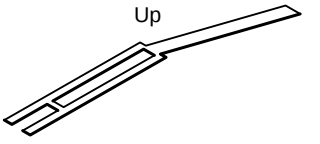

Fig. 30-1

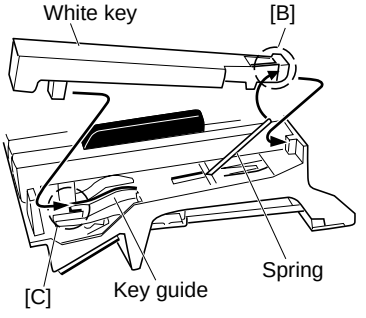

Fig. 31

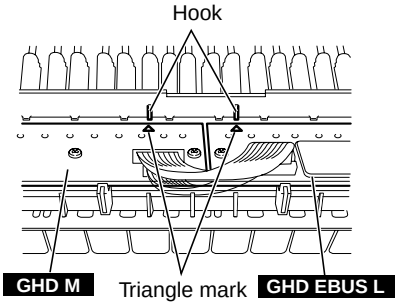

Fig. 32

■ LSI PIN DESCRIPTION

AK4385ET (X6040A00) **DAC** (Digital to Analog Converter) 17
HD6433690FYV H8/300 (X6008100) **CPU** (E-HOSTs) 15
YMW767-VTZ (X6055A00) **CPU** (SWL01B) 16
μ**PD780031AYGK-N04** (X0031200) **LKS** 15

● **HD6433690FYV H8/300** (X6008100) **CPU** (E-HOSTs)

DM: IC024

PIN NO.	NAME	I/O	FUNCTION	PIN NO.	NAME	I/O	FUNCTION
1	Avcc	-	Analog Power Supply (+3.3V)	25	/NMI	I	(Pull Up)
2	X2	O	Sub Clock Output	26	P80	O	- (NC)
3	X1	I	Sub Clock Input	27	P81	O	- (NC)
4	Vcl	-	Internal Power Supply (+3.3V)	28	P82	O	- (NC)
5	/RES	I	RESET input	29	P83	O	- (NC)
6	TEST	I	TEST input	30	P84	O	- (NC)
7	Vss	-	Ground	31	P85	I	(Pull Up or Vcc)
8	OSC2	O	Clock output	32	P86	O	- (NC)
9	OSC1	I	Clock input	33	P87	O	- (NC)
10	Vcc	-	Power supply	34	P20	O	SCK3 (Main CPU)
11	P50	O	- (NC)	35	P21	I	RXD (Pull Up)
12	P51	O	- (NC)	36	P22	O	TXD (Main CPU)
13	P52	I	Active Sensing ON/OFF	37	P14	I	/IRQ0 (Main CPU)
14	P53	O	- (NC)	38	P15	O	- (NC)
15	P54	O	- (NC)	39	P16	O	- (NC)
16	P55	O	- (NC)	40	P17	O	- (NC)
17	P10	O	- (NC)	41	P84	I	Analog Controller (AN4)
18	P11	O	- (NC)	42	P85	I	Analog Controller (AN5)
19	P12	O	/E-IC	43	P86	I	Analog Controller (AN6)
20	P56	I/O	SDA	44	P87	I	Analog Controller (AN7)
21	P57	I/O	SCL	45	P83	I	Analog Controller (AN3)
22	P74	O	- (NC)	46	P82	I	Analog Controller (AN2)
23	P75	O	- (NC)	47	P81	I	Analog Controller (AN1)
24	P76	O	- (NC)	48	P80	I	Analog Controller (AN0)

● μ**PD780031AYGK-NO4** (X0031200) **LKS**

MK SUB: IC001

PIN NO.	NAME	I/O	FUNCTION	PIN NO.	NAME	I/O	FUNCTION
1	P50/A8	I/O	Port 5 / Higher address bus	33	P10/ANI0	I	Port 1 / A/D converter analog input
2	P51/A9	I/O		34	AV_{REF}	I	A/D converter reference voltage input
3	P52/A10	I/O		35	AV_{DD}	-	Analog power supply
4	P53/A11	I/O		36	$\overline{RESET}$	I	System reset input
5	P54/A12	I/O		37	XT2	-	Subsystem clock oscillation
6	P55/A13	I/O		38	XT1	I	
7	P56/A14	I/O		39	IC	-	Internally connected
8	P57/A15	I/O		40	X2	-	Main system clock oscillation
9	Vss0	-	Ground	41	X1	I	
10	$V_{DD}0$	-	Power supply	42	Vss1	-	Ground
11	P30	I/O	Port 3	43	P00/INTP0	I/O	Port 0 / External interrupt request input
12	P31	I/O		44	P01/INTP1	I/O	
13	P32/SDA0	I/O	Port 3 / Serial data input/output	45	P02/INTP2	I/O	
14	P33/SCL0	I/O	Port 3 / Serial clock input/output	46	P03/INTP3/ADTRG	I/O	Port 0 / External interrupt request input / Trigger signai input
15	P34	I/O	Port 3	47	P70/TI00/TO0	I/O	Port 7 / External count clock input / 16-bit timer/event counter 0 output
16	P35	I/O		48	P71/TI01	I/O	Port 7 / Capture trigger input
17	P36	I/O		49	P72/TI50/TO50	I/O	Port 7 / External count clock input / 8-bit timer/event counter 50 output
18	P20/SI30	I/O	Port 2 / Serial data input	50	P73/TI51/TO51	I/O	Port 7 / External count clock input / 8-bit timer/event counter 51 output
19	P21/$\overline{SO30}$	I/O	Port 2 / Serial data output	51	P74/PCL	I/O	Port 7 / Clock output
20	P22/$\overline{SCK30}$	I/O	Port 2 / Serial clock input/output	52	P75/BUZ	I/O	Port 7 / Buzzer output
21	P23RxD0	I/O	Port 2 / Serial data input	53	P64/$\overline{RD}$	I/O	Port 6 / Strobe signal output for reading
22	P24/TxD0	I/O	Port 2 / Serial data output	54	P65/$\overline{WR}$	I/O	Port 6 / Strobe signal output for writing
23	P25/ASCK0	I/O	Port 2 / Serial clock input/output	55	P66/$\overline{WAIT}$	I/O	Port 6 / Wait insertion
24	$V_{DD}1$	-	Power supply	56	P67/ASTB	I/O	Port 6 / Strobe output
25	AVss	-	Ground	57	P40/AD0	I/O	Port 4 / Lower address/data bus
26	P17/ANI7	I	Port 1 / A/D converter analog input	58	P41/AD1	I/O	
27	P16/ANI6	I		59	P42/AD2	I/O	
28	P15/ANI5	I		60	P43/AD3	I/O	
29	P14/ANI4	I		61	P44/AD4	I/O	
30	P13/ANI3	I		62	P45/AD5	I/O	
31	P12/ANI2	I		63	P46/AD6	I/O	
32	P11/ANI1	I		64	A47/AD7	I/O	

● YMW767-VTZ (X6055A00) CPU (SWL01B)

DM: IC004, IC007

PIN NO.	NAME	I/O	FUNCTION	PIN NO.	NAME	I/O	FUNCTION
1	Vss	-	Ground	65	Vss	-	Ground
2	TESTN	I	Input for TEST	66	IOV_{DD}	-	Power supply +3.3 V
3	PLLBPN	I	PLL bypass select	67	LBN/LWRN/PF6	O	External memory lower-byte enable / Port F
4	$PLLV_{DD}$	-	PLL Power supply +2.5 V	68	UBN/UWRN/PF7	O	External memory upper-byte enable / Port F
5	CIN	-	Capacitor terminal for PLL	69	RDN/PF4	O	External memory read enable / Port F
6	PLLVss	-	PLL Ground	70	MD00	I/O	External memory data bus
7	TRSTN	I	JTAG input	71	MD08	I/O	
8	TMS	I		72	MD01	I/O	
9	TCK	I		73	MD09	I/O	
10	TDI	I		74	MD02	I/O	
11	TDO	O	JTAG output	75	MD10	I/O	
12	XI	I	Crystal oscillator	76	MD03	I/O	
13	XO	O	Crystal oscillator	77	Vss	-	Ground
14	Vss	-	Ground	78	MD11	I/O	External memory data bus
15	V_{DD}	-	Power supply +2.5 V	79	MD04	I/O	
16	ICN	I	Hardware reset	80	MD12	I/O	
17	ECSN	I	CPU I/F chip select	81	MD05	I/O	
18	EWRN/PD5	I	CPU I/F write enable / Port D	82	MD13	I/O	
19	ERDN/PD4	I	CPU I/F read enable / Port D	83	MD06	I/O	
20	EA3/PD3	I	CPU I/F address bus / Port D	84	MD14	I/O	
21	EA2/PD2	I		85	MD07	I/O	
22	EA1/PD1	I		86	MD15	I/O	
23	EA0/PD0	I		87	WRN/PF5	O	
24	IOV_{DD}	-	Power supply +3.3 V	88	Vss	-	Ground
25	ED0/PC0	I/O	CPU I/F data bus / Port C	89	V_{DD}	-	Power supply +2.5 V
26	ED1/PC1	I/O		90	IOV_{DD}	-	Power supply +3.3 V
27	ED2/PC2	I/O		91	MA17	O	External memory address bus
28	ED3/PC3	I/O		92	MA16	O	
29	ED4/PC4	I/O		93	MA15	O	
30	ED5/PC5	I/O		94	MA14	O	
31	ED6/PC6	I/O		95	MA13	O	
32	ED7/PC7	I/O		96	MA12	O	
33	Vss	-	Ground	97	MA11	O	
34	IRQ0N/PH0	I	Interrupt input / Port H	98	MA10	O	
35	TxD0	O	Serial output	99	MA09	O	
36	RxD0	I	Serial input	100	MA08	O	
37	TxD1/PG2	O	Serial output / Port G	101	MA07	O	
38	RxD1/PH1	I	Serial input / Port H	102	MA06	O	
39	SCLK1/PH2	I	External synchronization clock / Port H	103	MA05	O	
40	SDO	O	Serial output	104	Vss	-	Ground
41	SDI/PH3	I	Serial input / Port H	105	MA04	O	External memory address bus
42	BCLK	O	Bit clock output	106	MA03	O	
43	WCLK/SYO	O	Word clock output	107	MA02	O	
44	SYSCLK/PG3	O	Clock output / Port G	108	MA01	O	
45	Vss	-	Ground	109	CS0N/PG0	O	External memory chip select / Port G
46	V_{DD}	-	Power supply +2.5 V	110	MA18	O	External memory address bus
47	IOV_{DD}	-	Power supply +3.3 V	111	MA19	O	
48	PA0	I/O	I/O port A	112	MA21/PF1	O	External memory address bus / Port F
49	PA1	I/O		113	MA22/PF2	O	
50	PA2	I/O		114	MA20	O	External memory address bus
51	PA3	I/O		115	MA23/PF3	O	External memory address bus / Port F
52	PA4	I/O		116	CSIN/PG1	O	External memory chip select / Port G
53	PA5	I/O		117	MA00/PF0	O	External memory address bus / Port F
54	PA6	I/O		118	Vss	-	Ground
55	PA7	I/O		119	V_{DD}	-	Power supply +2.5 V
56	Vss	-	Ground	120	IOV_{DD}	-	Power supply +3.3 V
57	PB0	I/O	I/O port B	121	CS2N/PE0	O	External memory chip select / Port E
58	PB1	I/O		122	CS3N/PE1	O	
59	PB2	I/O		123	CS4N/CASN/PE2	O	
60	PB3	I/O		124	CS5N/PE3	O	
61	PB4	I/O		125	CS50RDN/PE4	O	
62	PB5	I/O		126	CS51WRN/PE5	O	
63	PB6	I/O		127	CS52WRN/PE6	O	
64	PB7/SYI	I/O		128	CS53WRN/RASN/PE7	O	

● **AK4385ET** (X6040A00) **DAC** (Digital to Analog Converter)

DM: IC011

PIN NO.	NAME	I/O	FUNCTION	PIN NO.	NAME	I/O	FUNCTION
1	MCLK	I	Master Clock	9	AOUTR-	O	Rch Analog out(-)
2	BICK	I	Audio Serial Data Clock	10	AOUTR+	O	Rch Analog out(+)
3	SDTI	I	Audio Serial Date Input	11	AOUTL-	O	Lch Analog out(-)
4	LRCK	I	L/R Clock	12	AOUTL+	O	Lch Analog out(+)
5	PDN	I	Power Down mode	13	Vss	-	Ground
6	CSN	I	Chip Select	14	VDD	-	Power Supply
7	CCLK	I	Control Data Input	15	DZFR	O	Rch Data Zero Input Detect
8	CDTI	I	Control Data Input	16	DZFL	O	Lch Data Zero Input Detect

■ IC BLOCK DIAGRAM

● **SN74LV32APWR** (X5647A00)
Quad 2 Input OR

DM: IC018

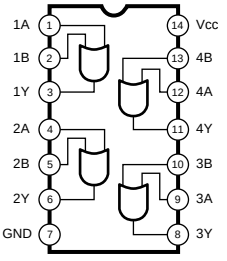

● **SN74LV126APWR** (X3865A00)
Bus Buffer

DM: IC029

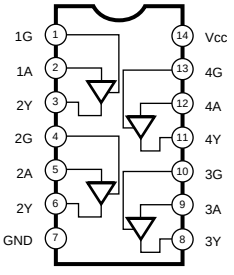

● **SN74AHC1G08DCKR** (X3833A00)
TC7S08FU (XP116A00)
Single 2-Input Positive-AND Gate

DM: IC002

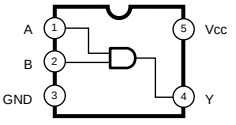

FUNCTION TABLE

INPUTS		OUTPUT
A	B	Y
H	H	H
L	X	L
X	L	L

● **TC7W04FU** (XP004A00)
Triple Inverter

DM: IC006

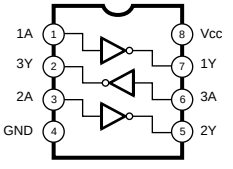

● **NJM2068M-D (TE2)** (X3505A00)
μPC4570G2-T1-A (XF291A00)
Dual Operational Amplifier

DM: IC014
MAEQ: IC005, 006, 009, 011

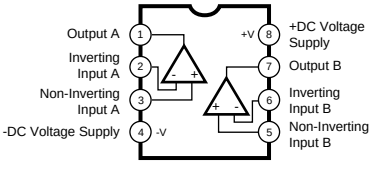

● **LA6517M** (XT131A00)
Dual Power Operational Amplifier

MAEQ: IC003

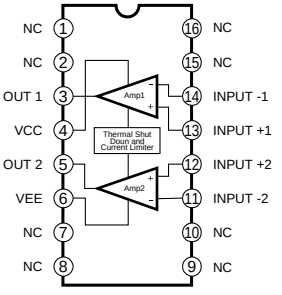

● **TA8233H** (XU131A00)
Audio Power Amplifier

MAEQ: IC004

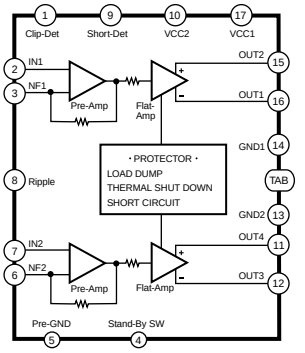

● **μPC4574G2** (XE518A00)
Quad Operational Amplifier

MAEQ: IC007, 010

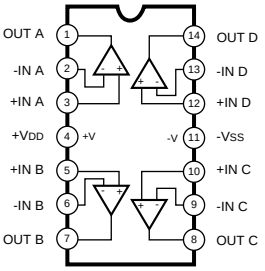

■ CIRCUIT BOARDS

DJACK (X6372C0) 18
DM (X5830D0) 19
GHD EBUS L (XZ138D0) 23
GHD H (X2218A0) 25
GHD M (X2217A0) 24
HP (XQ390A0) 22
MAEQ (X6391C0) 20/21
MK SUB (XZ142B0) 22
MVR (X6371C0) 18
PANEL (X6371C0) 18
PEDAL (XR780C0) 22
PL (XR898A0) 22
PS (XU372F0) 26

Note : See parts list for details of circuit board conponent parts.

● DJACK Circuit Board

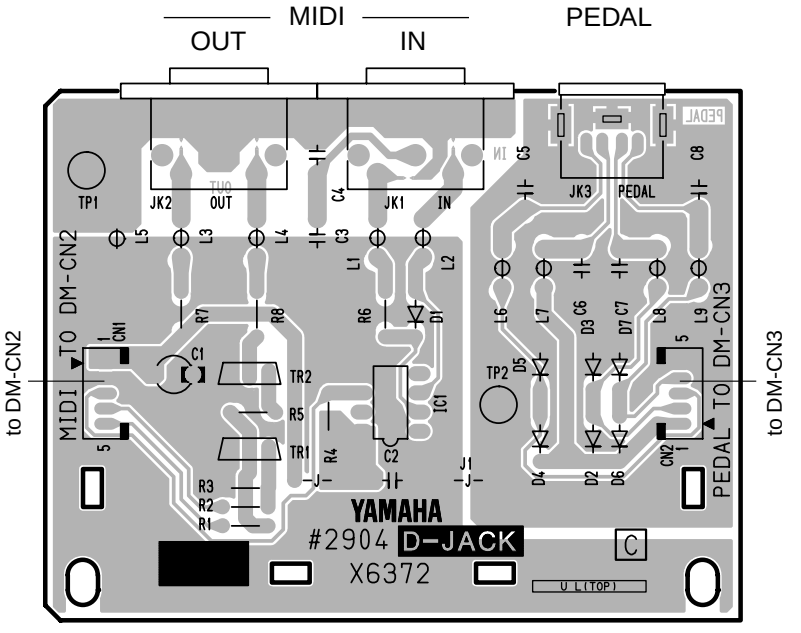

Component side

● PANEL Circuit Board

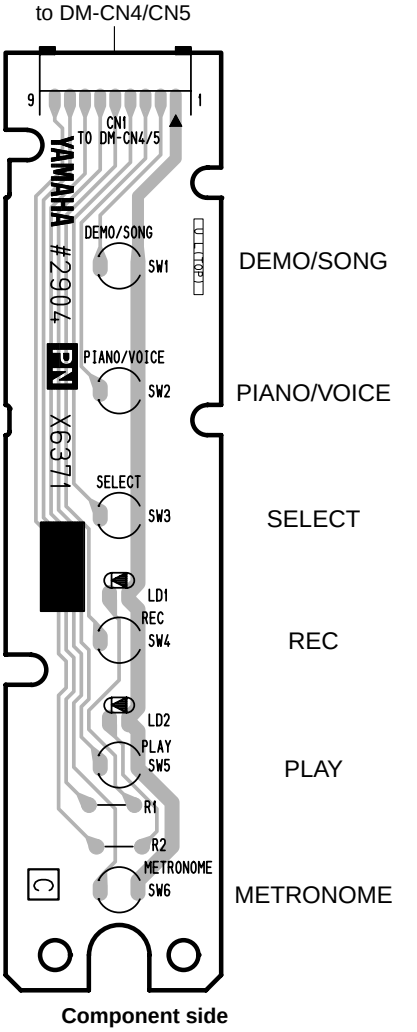

Component side

● MVR Circuit Board

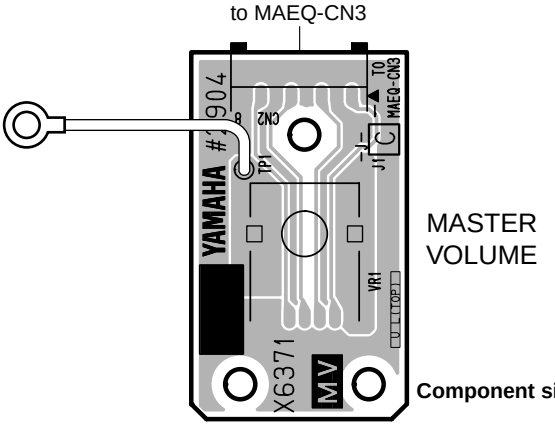

Component side

DJACK: 2NA-WE70680 ⚠1
PANEL, MVR: 2NA-WE70440 ⚠1

● DM Circuit Board

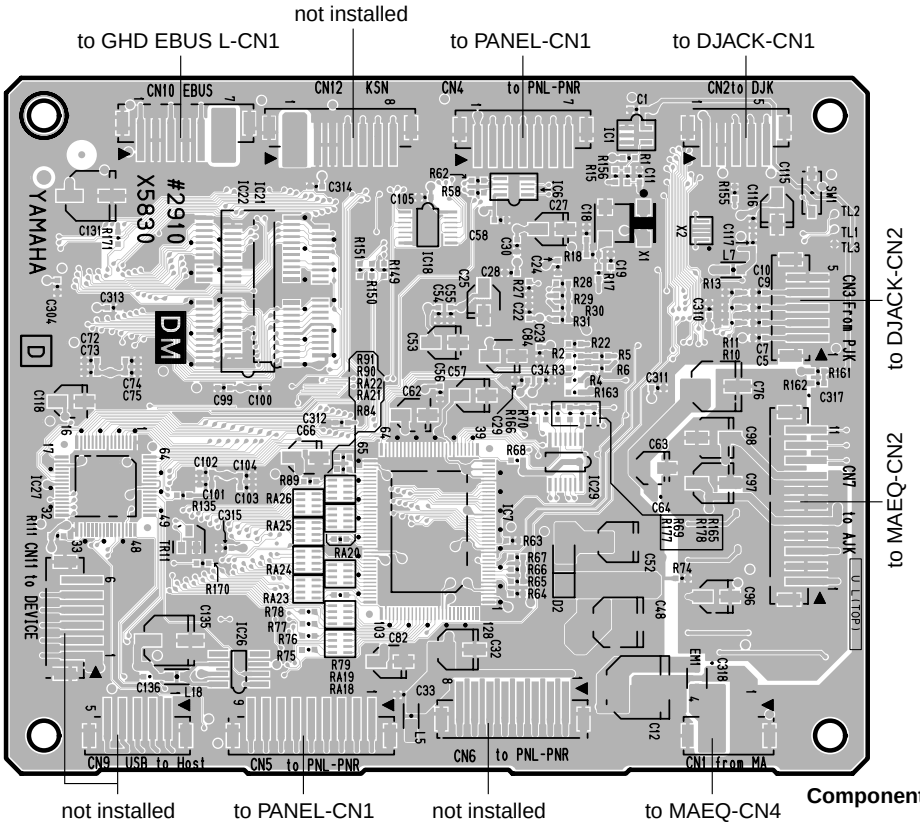

Component side

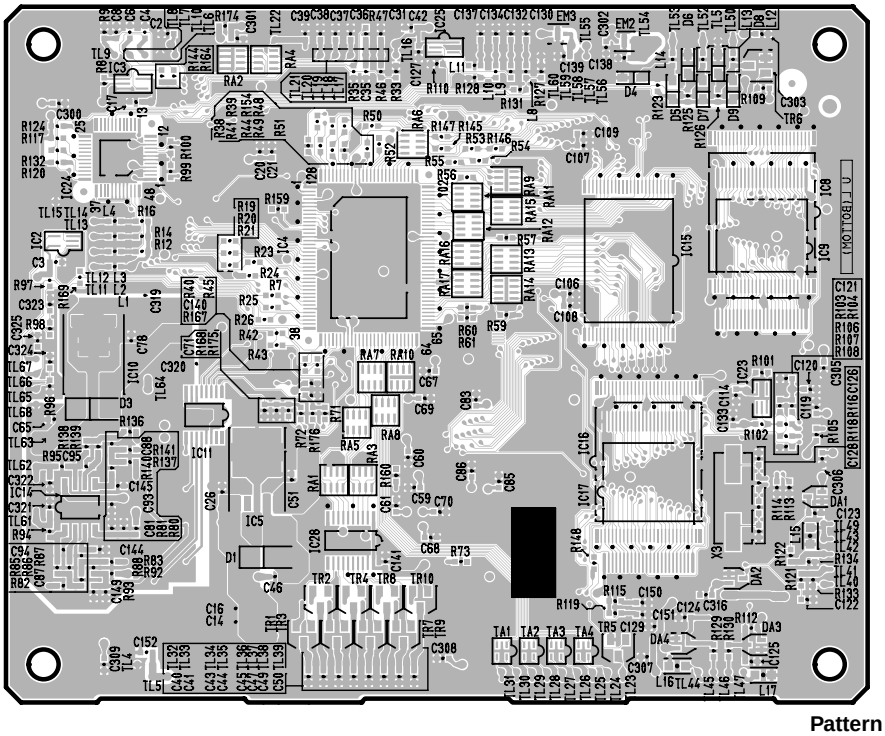

Pattern side

● MAEQ Circuit Board

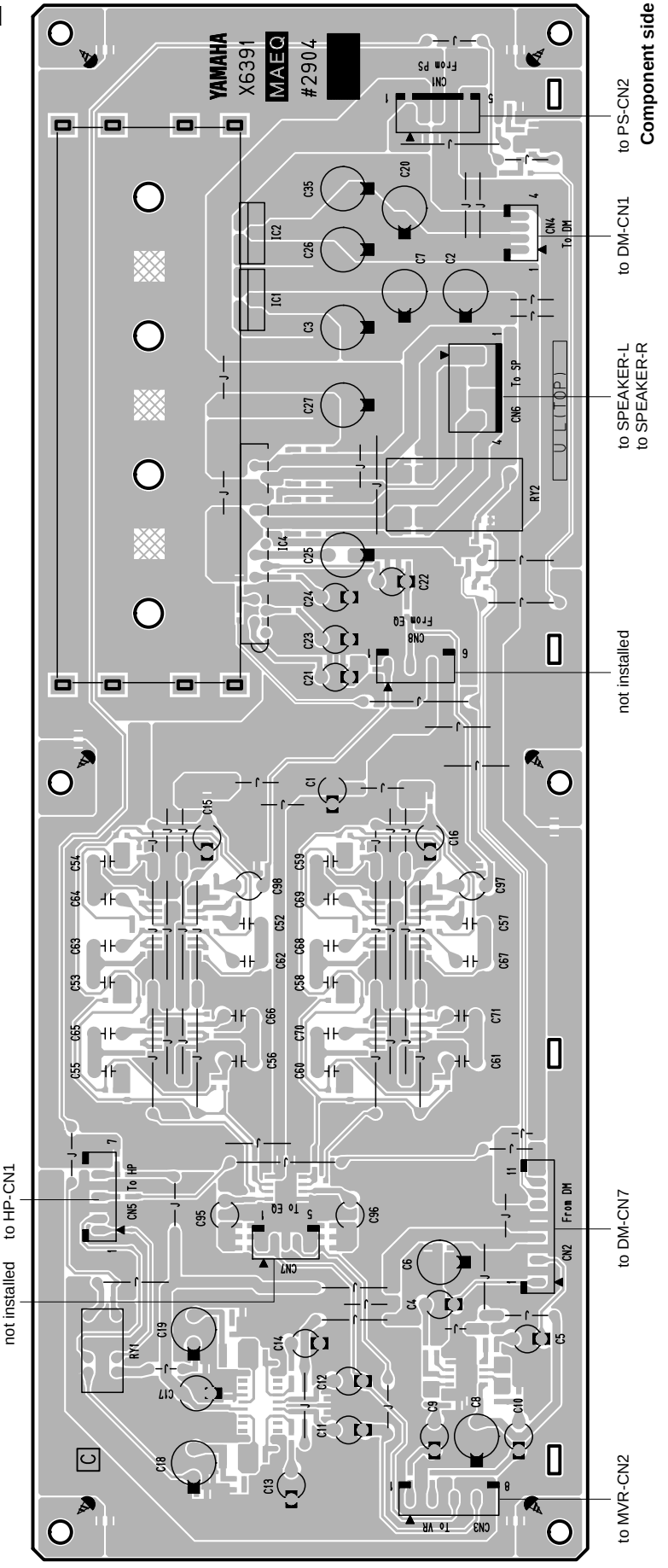

● MAEQ Circuit Board

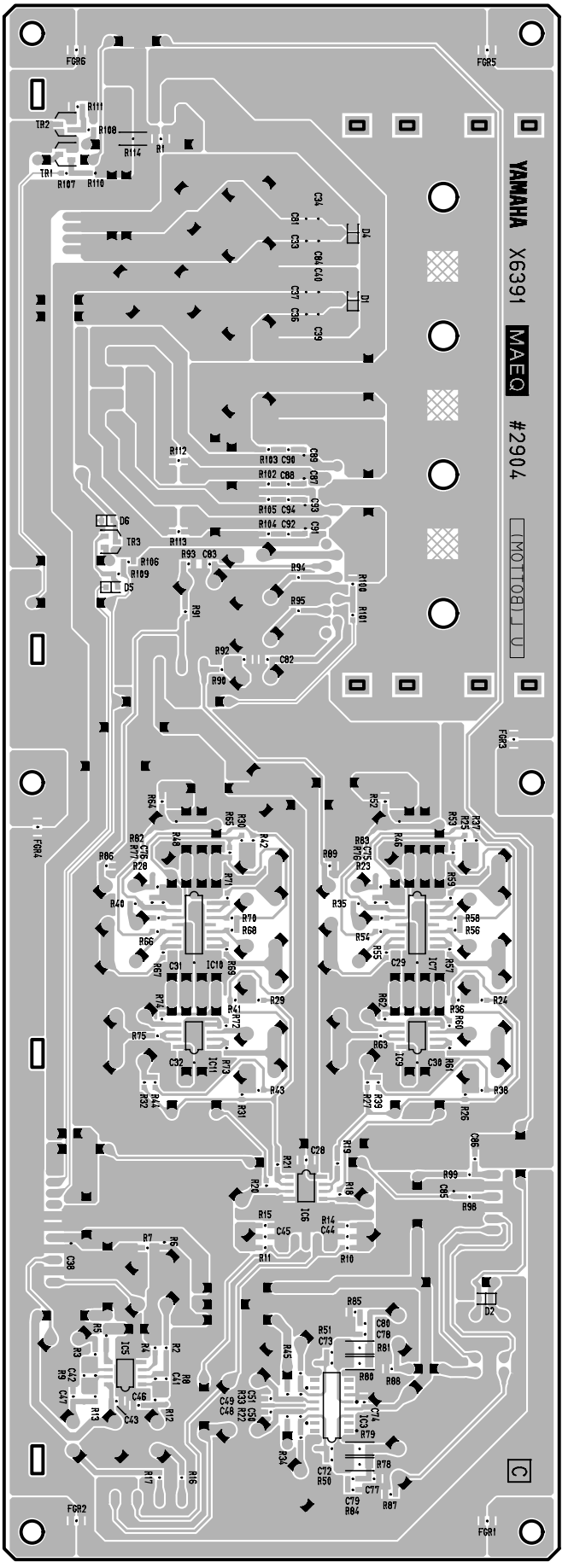

● PEDAL Circuit Board

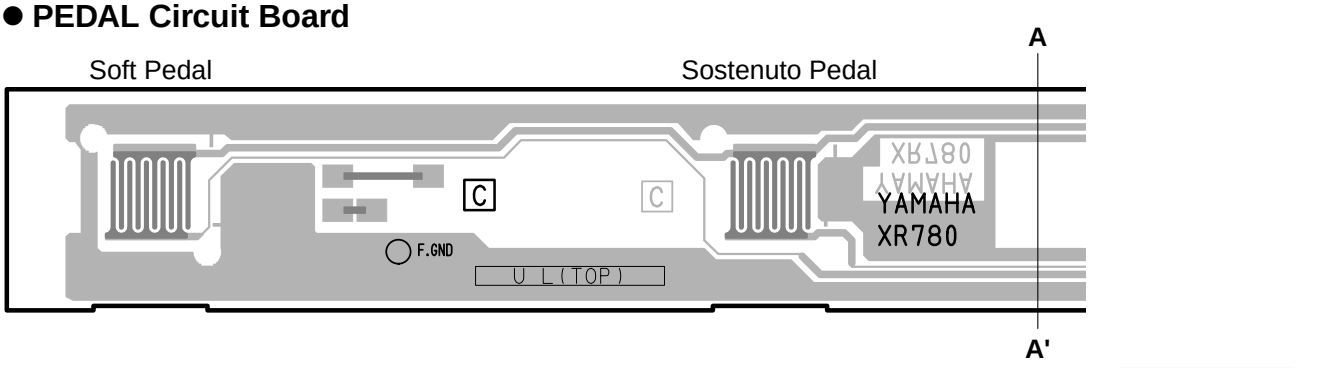

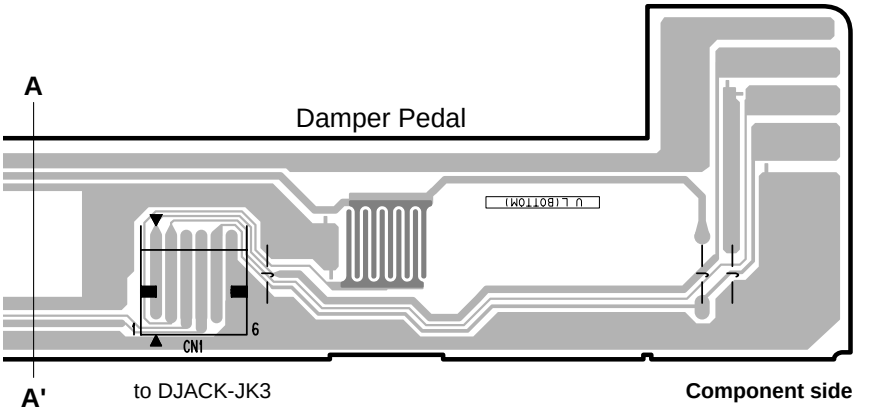

● HP Circuit Board

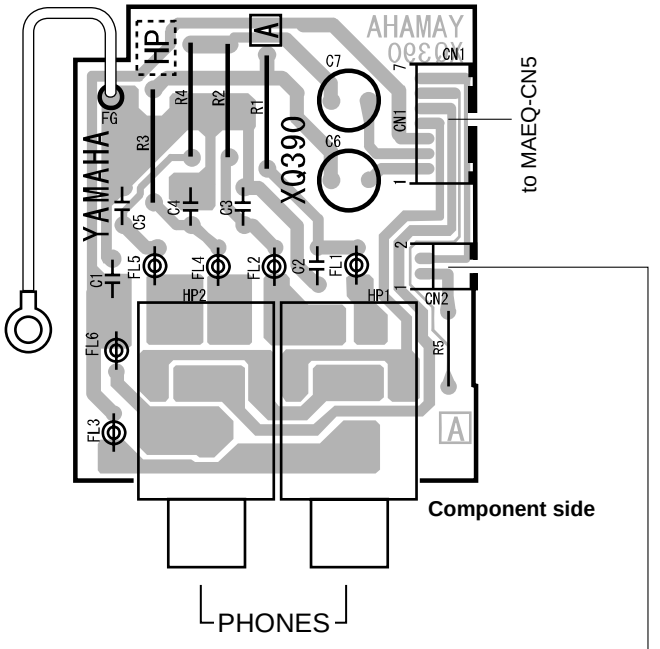

● MK SUB Circuit Board

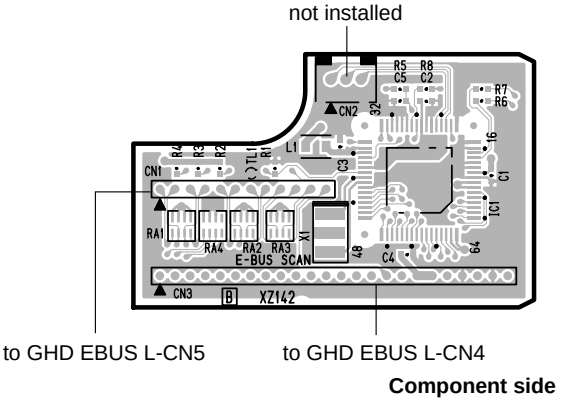

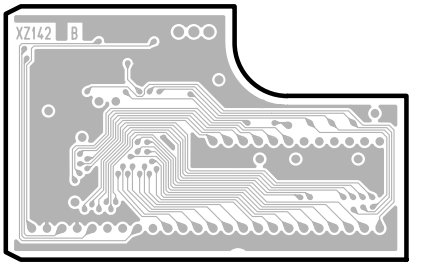

● PL Circuit Board

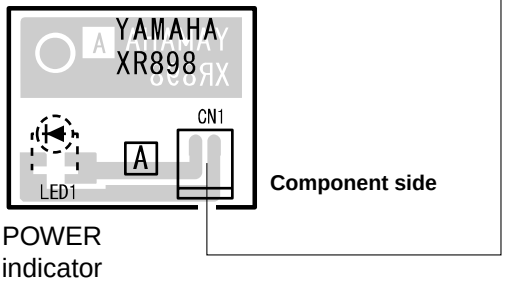

HP: 2NA-V004770 ⚠4
MK SUB: 2NA-V658810
PEDAL: 2NA-V233730 ⚠1
PL: 2NA-VN63740

● GHD EBUS L Circuit Board

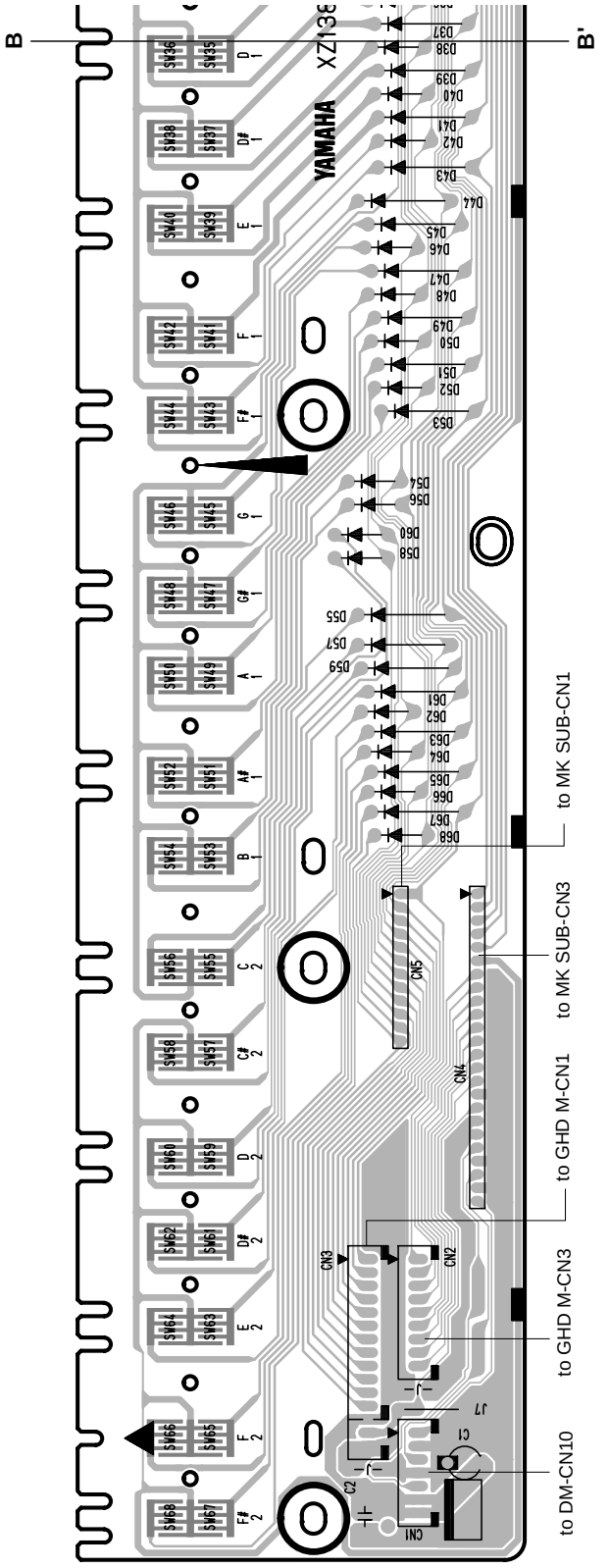

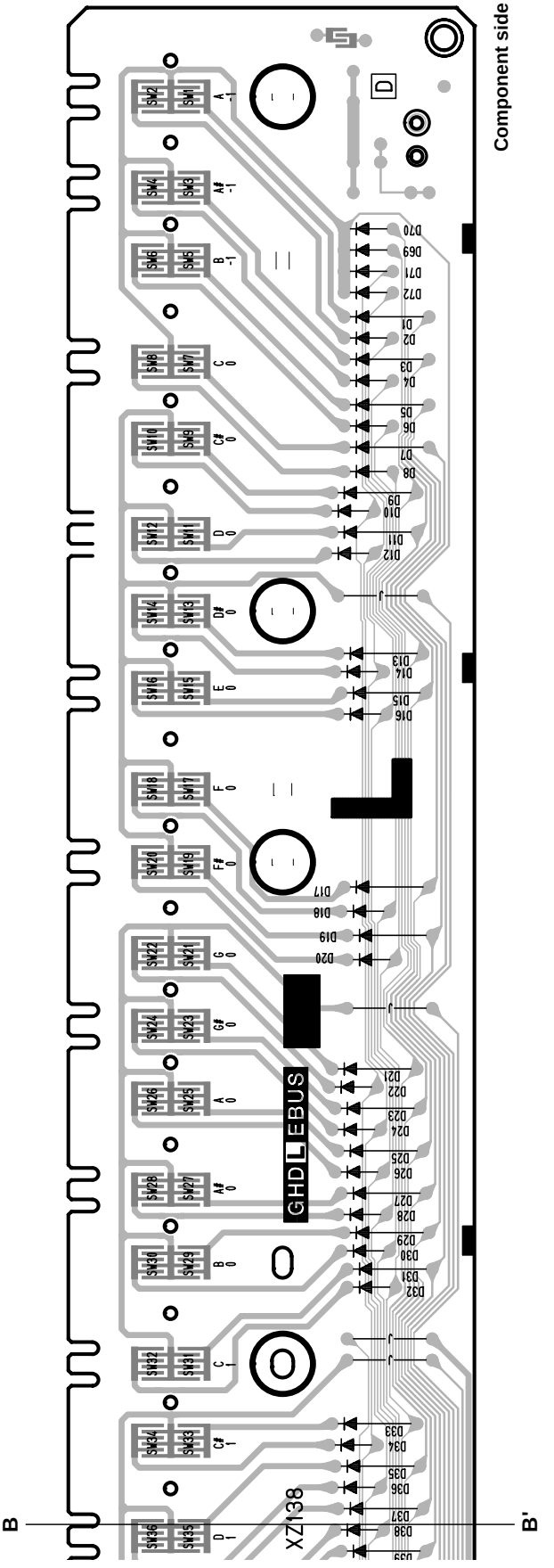

● GHD M Circuit Board

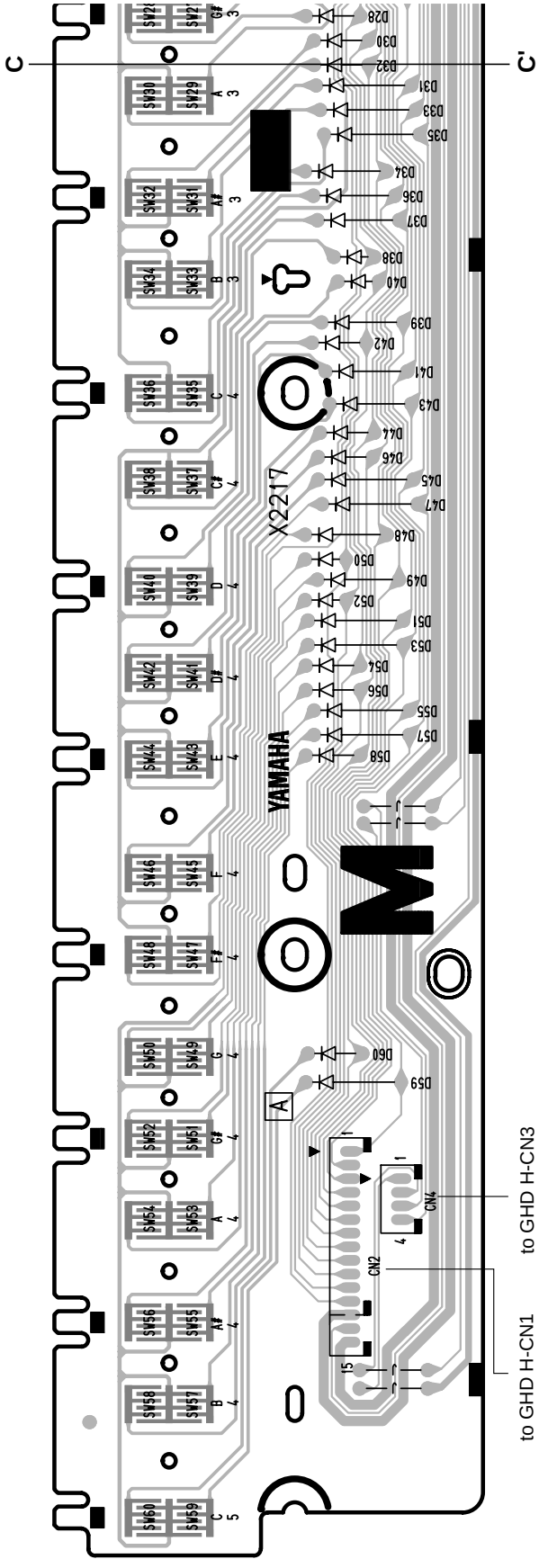

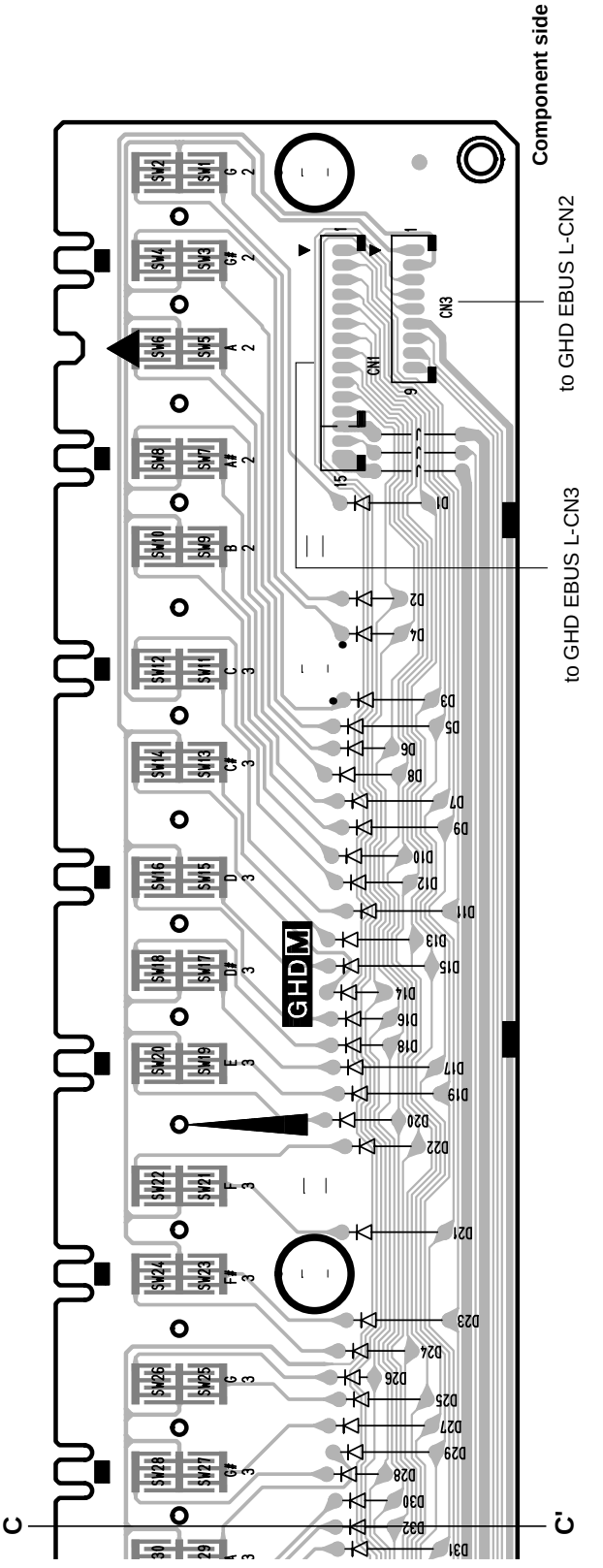

● GHD H Circuit Board

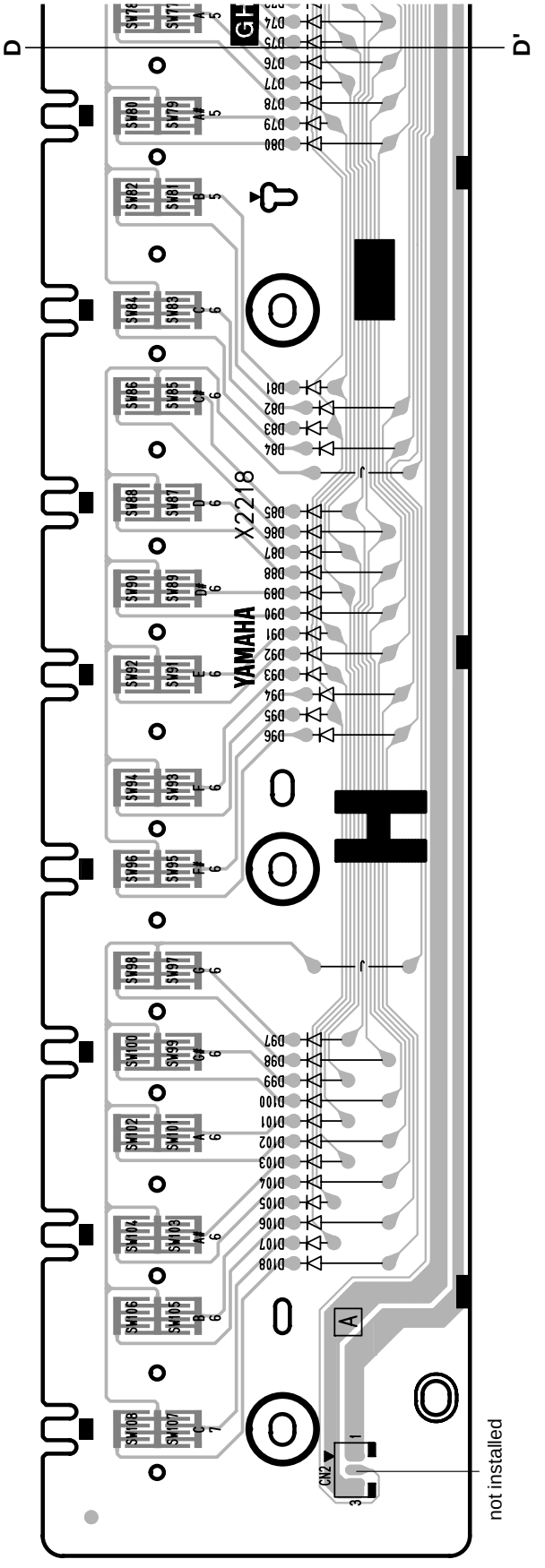

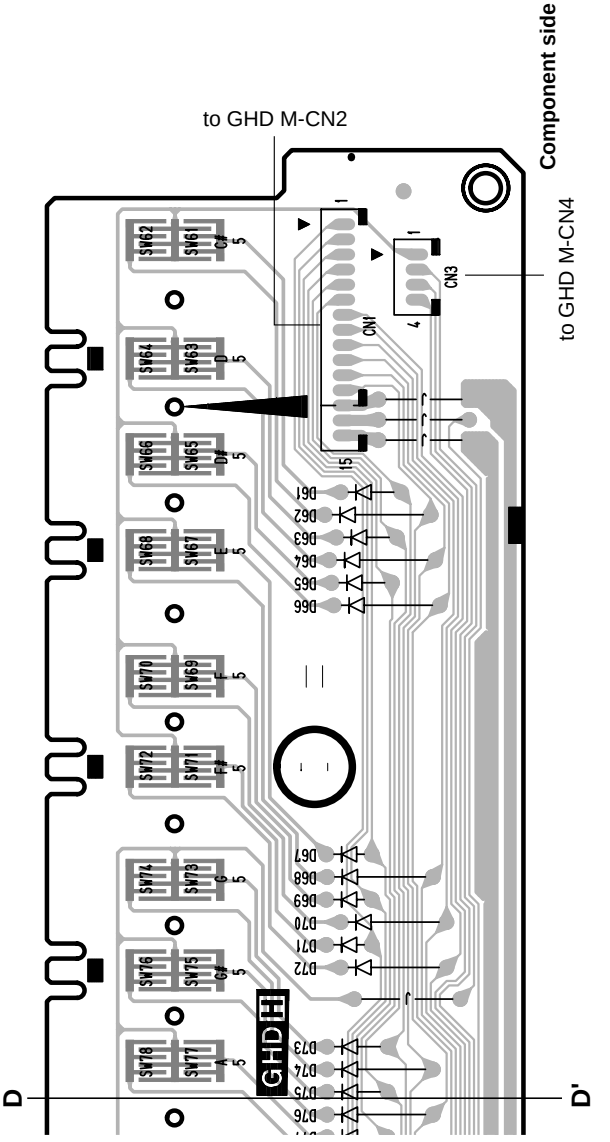

● PS Circuit Board

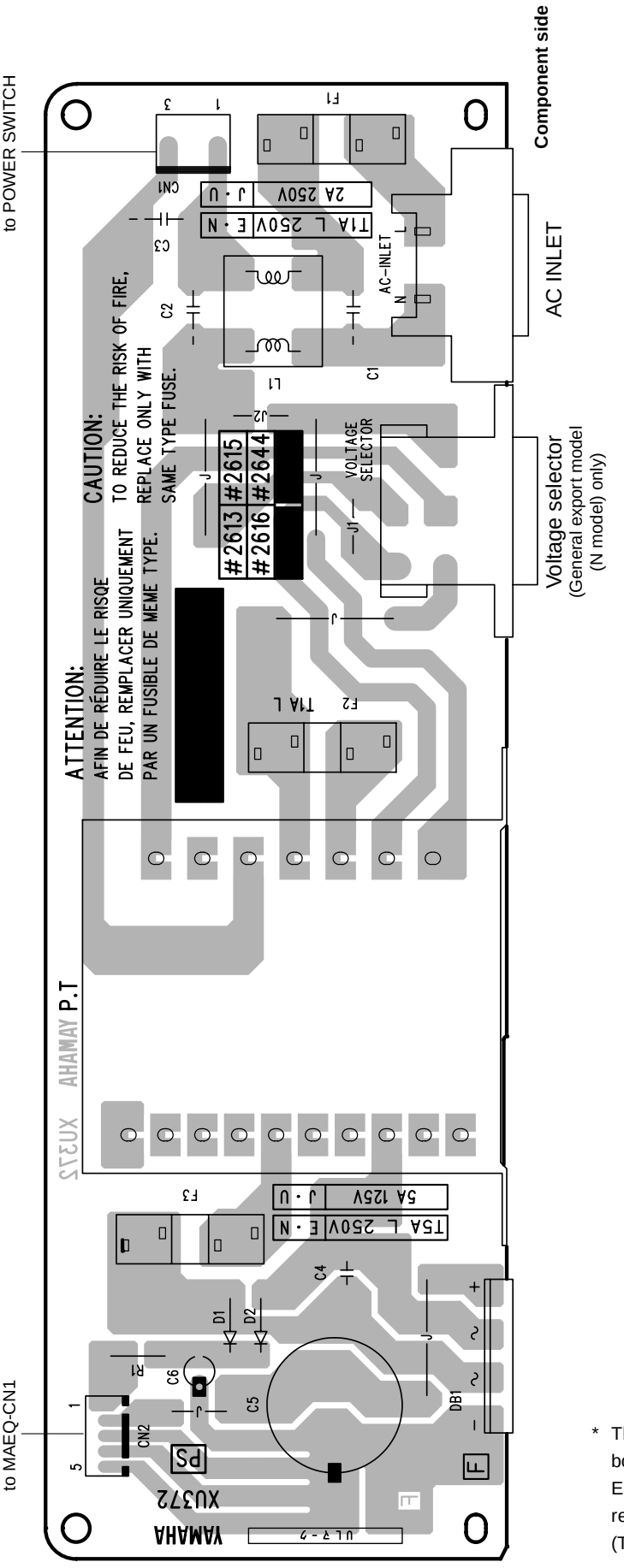

* This shows the F-version circuit board diagram. It differs from the E version one partially with respect to the surface printing. (The pattern is the same.)

■ TEST PROGRAM

1. Preparation

• Following items are required for testing. (Input impedance of measuring instrument is more than 1MΩ)
- Level meter (with JIS-C Filter)
- Frequency counter: Below decimal point 3 or more figures measurement is possible.
- MIDI cable

• Set each control as follows.
- MASTER VOLUME: Max
- PEDAL: OFF

Connect the measurement plug (stereo plug) to the [PHONES] jack. (33Ω load)

2. To enter Test Program

Turn on the power with [C#2], [F2] and [G#2] keys pressed and held simultaneously. (Fig. 1)
Once the Test Program is started properly, the sine wave of A3 sounds. To stop the sound, press the [DEMO/SONG] button.

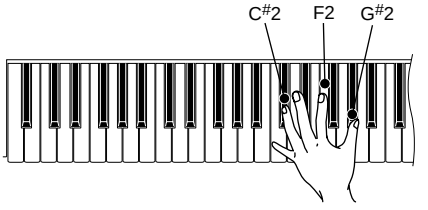

Fig. 1

3. To proceed the test

Test items are listed in Table 1.
Press the corresponding key to select and execute each test. (See Fig. 2)
To enter the test item select mode after completing each test item, press the [DEMO/SONG] button.

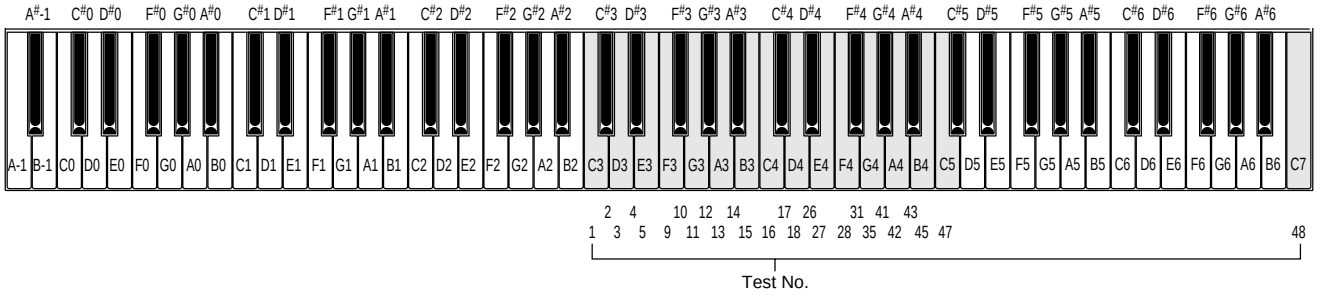

Fig. 2

4. Test result

Each test result is indicated by the sound.
When the test result is OK, the sine wave of C4 sounds.
When the test result is NG, the sine wave of C2 sounds.

Table 1 Test items

No.	Key	Test item	Test function and judgment criteria
1	C3	ROM version check	To check the Master ROM version using C0–A2 keys. To check the Slave ROM version using C3–A5 keys. Press keys in the specified range and find the key where the sine wave sounds. Check the version by the scale of that key. (See Fig. 3) Press keys C0–A0 to check the integer of the Master ROM version. Press keys C1–A1 to check the first decimal place of the Master ROM version. Press keys C2–A2 to check the second decimal place of the Master ROM version. Press keys C3–A3 to check the integer of the Slave ROM version. Press keys C4–A4 to check the first decimal place of the Slave ROM version. Press keys C5–A5 to check the second decimal place of the Slave ROM version. When the number corresponding to the pressed key agrees with the current version, an OK (sine wave of C4) sound is generated and when disagrees, an NG (sine wave of C2) sound is generated. For the Key-to-number correspondence, refer to Fig. 3. Example) When the current version is Ver.1.01 When the C#0 key is pressed. the sine wave of C4 sounds, indicating 1 for the integer. When the C1 key is pressed, the sine wave of C4 sounds, indicating 0 for the first decimal place. When the C#2 key is pressed, the sine wave of C4 sounds, indicating 1 for the second decimal place. In this way, the version 1.01 is confirmed. (The sine wave of C2 sounds when any key other than C#0, C1 and C#2 is pressed.)
2	C#3	Master ROM check 1	To check the ROM checksum connected to the CPU bus (Simplified check) For the OK test result, the sine wave of C4 sounds (for 1 second). For NG, the sine wave of C2 sounds (continuously until any key is pressed).
3	D3	Slave ROM check 1	To check the ROM checksum connected to the CPU bus (Simplified check) For the OK test result, the sine wave of C4 sounds (for 1 second). For NG, the sine wave of C2 sounds (continuously until any key is pressed).
4	D#3	RAM check 1	To check the connection condition of RAM connected to the CPU bus (Simplified check) For the OK test result, the sine wave of C4 sounds (for 1 second). For NG, the sine wave of C2 sounds (continuously until any key is pressed).
5	E3	Flash ROM check 1	To check erase, write, read functions for specific bank of Flash ROM (Simplified check) For the OK test result, the sine wave of C4 sounds (for 1 second). For NG, the sine wave of C2 sounds (continuously until any key is pressed). It takes 6 seconds before checking is completed.

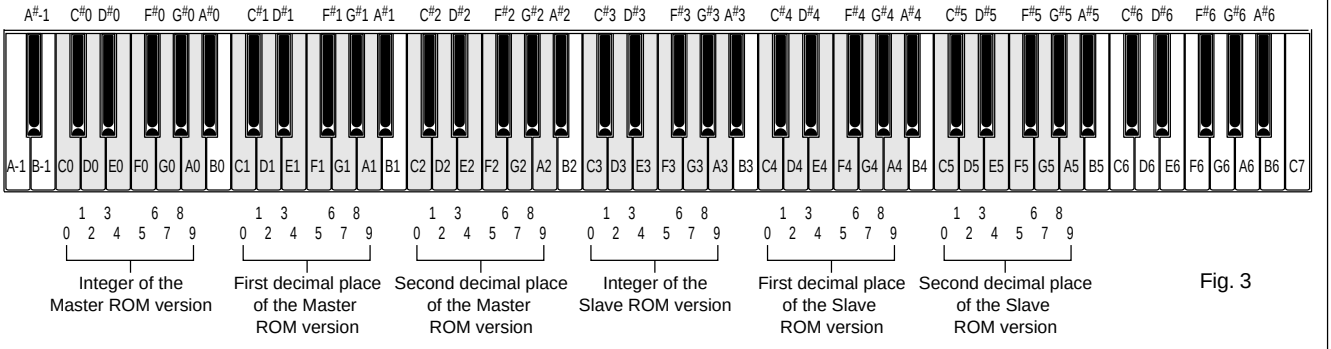

Fig. 3

No.	Key	Test item	Test function and judgment criteria
9	F3	TG1 check (Auto Scaling)	The sine wave sounds from the low range in the key range (A0–E3) capable of sounding while the sound production channel of the sound source is changed one after another. (The sound stops after sounding of all 32 channels.) Check that no abnormal sound or noise is generated. When a key is pressed after Auto Scaling, the sine wave sounds. (Single sound, priority on first-come) Press the [DEMO/SONG] button to end this test.
10	F#3	TG2 check (Auto Scaling)	The sine wave sounds from the low range in the key range (F3–C6) capable of sounding while the sound production channel of the sound source is changed one after another. (The sound stops after sounding of all 32 channels.) Check that no abnormal sound or noise is generated. When a key is pressed after Auto Scaling, the sine wave sounds. (Single sound, priority on first-come) Press the [DEMO/SONG] button to end this test.
11	G3	Pitch check	Check that the sine wave of 440Hz ± 0.2Hz sounds at the level of specification (DAC input full bit -12dB). (PAN = Center) Connect the frequency counter to the [PHONES] jack for measurement. When the test item is ended with the [DEMO/SONG] button, the sound stops.
12	G#3	Output Level R check	Check that the sine wave of 1kHz sounds at the level specified below (DAC input full bit -12dB). (PAN = R) Connect a level meter (with JIS-C Filter) to the [PHONES] jack for measurement. PHONES L: -40 dBu or less PHONES R: +0 dBu ± 2 dB When the test item is ended with the [DEMO/SONG] button, the sound stops.
13	A3	Output Level L check	Check that the sine wave of 1kHz sounds at the level specified below (DAC input full bit -12dB). (PAN = L) Connect a level meter (with JIS-C Filter) to the [PHONES] jack for measurement. PHONES L: +0 dBu ± 2dB PHONES R: -40dBu or less When the test item is ended with the [DEMO/SONG] button, the sound stops.
14	A#3	EQ-LOW frequency check	Check that the sine wave of 65.4 Hz (C1) sounds at the level specified below (DAC input full bit -12dB). (PAN = Center) Connect a level meter (with JIS-C Filter) to CN6 of the MAEQ circuit board for measurement. MAEQ circuit board *CN6 (1-2, 3-4): + 15.5 dBu ± 2 dB Dummy resistance: 4Ω (L ch/R ch) When the test item is ended with the [DEMO/SONG] button, the sound stops.
15	B3	EQ-MID frequency check	Check that the sine wave of about 523 Hz (C4) sounds at the level specified below (DAC input full bit -12dB). (PAN = Center) Connect a level meter (with JIS-C Filter) to CN6 of the MAEQ circuit board for measurement. MAEQ circuit board *CN6 (1-2, 3-4): + 14.0 dBu ± 2 dB Dummy resistance: 4Ω (L ch/R ch) When the test item is ended with the [DEMO/SONG] button, the sound stops
16	C4	EQ-HIGH frequency check	Check that the sine wave of 4186 Hz (C7) sounds at the level specified below (DAC input full bit -12dB). (PAN = Center) Connect a level meter (with JIS-C Filter) to CN6 of the MAEQ circuit board for measurement. MAEQ circuit board *CN6 (1-2, 3-4): + 16.0 dBu ± 2 dB Dummy resistance: 4Ω (L ch/R ch) When the test item is ended with the [DEMO/SONG] button, the sound stops.

*CN6 1pin: L+ 2pin: L- 3pin: R+ 4pin: R-

No.	Key	Test item	Test function and judgment criteria
17	C#4	SW check	Press switches one at a time in the order as in Table 2 (p.31). The sine wave sounds at the scale corresponding to each switch being pressed (Refer to Table 2 in p.31.). Also, when there is an LED corresponding to that switch, the LED lights up while the switch is pressed. Check that all switches are pressed correctly, resulting in OK. Pressing a switch other than specified ones results in NG. When the pressed switch is not detected even though it is actually pressed, no sound is produced and the test results in NG. For the OK test result, the sine wave of C4 sounds (for 1 second). For NG, the sine wave of C2 sounds (continuously until any key is pressed).
18	D4	Lighting of all panel LEDs	All LEDs should light up.
26	D#4	Pedal 1 check (Soft pedal)	The sine wave of C3 sounds when the test is started and the sine wave of C4 sounds when the pedal is depressed. When the pedal is released, the sound of the C4 sine wave stops and the test result is OK. For the NG test result, the sine wave sounds continuously (until any key is pressed).
27	E4	Pedal 2 check (Sostenuto pedal)	The sine wave of C3 sounds when the test is started and the sine wave of C4 sounds when the pedal is depressed. When the pedal is released, the sounding of the C4 sine wave stops and the test result is OK. For the NG test result, the sine wave sounds continuously (until any key is pressed).
28	F4	Pedal 3 check (Damper pedal)	The sine wave of C3 sounds when the test is started and the sine wave of C4 sounds when the pedal is depressed. When the pedal is released, the sound of the C4 sine wave stops and the test result is OK. For the NG test result, the sine wave sounds continuously (until any key is pressed).
31	F#4	MIDI check	Connect the [MIDI IN] jack and [MIDI OUT] jack with the MIDI cable and execute the test. For the OK test result, the sine wave of C4 sounds (for 1 second). For NG, the sine wave of C2 sounds (continuously until any key is pressed).
35	G4	Keyboard check by types	This test is executed as a factory test.
41	G#4	Master ROM check 2	To check the ROM checksum connected to the CPU bus (Full address) For the OK test result, the sine wave of C4 sounds (for 1 second). For NG, the sine wave of C2 sounds (continuously until any key is pressed). It takes 10 seconds before checking is completed.
42	A4	Slave ROM check 2	To check the ROM checksum connected to the CPU bus (Full address) For the OK test result, the sine wave of C4 sounds (for 1 second). For NG, the sine wave of C2 sounds (continuously until any key is pressed). It takes 13 seconds before checking is completed.
43	A#4	RAM check 2	To check RAM connected to the CPU bus (Full address) For the OK test result, the sine wave of C4 sounds (for 1 second). For NG, the sine wave of C2 sounds (continuously until any key is pressed). As execution of this test causes the entire data on RAM to be rewritten, it is necessary to execute initialization after this test.

No.	Key	Test item	Test function and judgment criteria
45	B4	Flash ROM check 2	To check erase, write, read functions for all banks of Flash ROM * Note that execution of this test causes all data in Flash ROM to be erased. (a) Erase function check Perform the erasing procedure to the entire Flash ROM and check if it is successful. (b) Write function check To check the full address checksum of Flash ROM * Be careful not to turn off the power during the write function check. (c) Final erasure To erase the data written during (b) Write function check. For the OK test result, the sine wave of C4 sounds (for 1 second). For NG, the sine wave of C2 sounds (continuously until any key is pressed). It takes 26 seconds before checking is completed.
47	C5	Factory Set	Initialize all the backup areas so as to obtain the factory outgoing setting state. (RAM and Flash) * Note that all the data will be erased. For the OK result, the sine wave of C4 sounds (for 1 second). For NG, the sine wave of C2 sounds (continuously until any key is pressed). * In this stage, the flag for initialization is raised only and initialization will be executed when the power is turned on next time. After executing this factory setting, be sure to execute Test No. 48 “Test Exit”. Initialization of the memory is actually executed when the program is restarted (RE BOOT). Once it is started, do not turn off the power until LED flashing comes to an end. It takes 8 seconds before checking is completed.
48	C7	Test Mode Exit	To end the test program and reset to the normal mode (for restarting).

Table 2 Switch test order

Oder	Switch name	LED to light up	Note No.
1	DEMO/SONG		C3
2	PIANO/VOICE		D3
3	SELECT		E3
4	REC	REC	F3
5	PLAY	PLAY	G3
6	METRONOME		A3

■ BACKING UP DATA AND INITIALIZING THE SETTINGS

Backing up data to flash memory

The following items will be stored in flash memory on this instrument. This data will be kept after you turn off the power to the instrument.

Backup data
Metronome volume
Metronome tempo
Touch sensitivity
Tuning
Recorded performance data (user song)
Song data once loaded from a computer

Initializing the settings

When you initialize the settings, all data, excluding the user song and songs loaded from a computer, will be initialized and reset to the factory default settings.

While holding down the C7 (the highest) key, turn on the power to the instrument.

⇨ The data (excluding the data for the recorded performance and songs loaded from a computer) will be initialized.

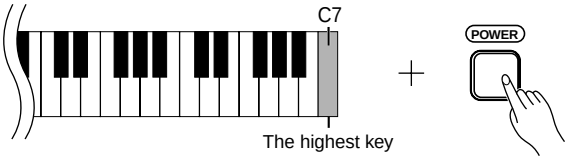

⚠ *CAUTION*

Do not turn off the power to this instrument while it is initializing the data in its internal memory (that is, while the [REC] and [PLAY] button indicators are flashing).

If this instrument somehow becomes disabled or malfunctions, turn off the power to the instrument, then perform the initialization procedure.

■ TRANSMITTING SONG DATA BETWEEN THE COMPUTER AND YDP-323

In addition to the demo songs and the 50 piano preset songs stored in this instrument, you can play data for other song by loading it from a connected computer.
To be able to use this function, you must first download Musicsoft Downloader from Yamaha website at the following URL, and install it on your computer.
http://music.yamaha.com/download/

You can download free Musicsoft Downloader from the Yamaha website.

● System requirement for Musicsoft Downloader

• OS	: Windows 98SE/Me/2000/XP Home Edition/XP Professional
• CPU	: Intel® Pentium® or Celeron® chip of 233MHz or higher (500MHz or higher recommended)
• Memory	: 64MB or higher (256MB or higher recommended)
• Available hard disk capacity	: 128MB or higher (512MB or higher recommended)
• Display	: 800 × 600 High Color (16-bit)
• Others	: Microsoft® Internet Explorer® version 5.5 or higher

Loading Song Data from a Computer to the Digital Piano

You can load piano song data from a computer to this instrument. Also, after you record your performance on this instrument and save the recording to a computer, you can load the recording back to the instrument.
This instrument can read MIDI data in SMF Format 0. However, if such data includes any information for functions that are not supported by this instrument, the instrument will not play the data correctly.
For more information on loading song data from a computer to this instrument, please refer to "Transferring Data Between the Computer and Instrument (for unprotected data)" in the Help file that came with Musicsoft Downloader.

SMF (Standard MIDI File)
This file features a popular sequence format (for recording performance data). This file is sometimes called a "MIDI file." The file extension is MID.
You can play the SMF format song using music software or a sequencer that supports SMF. This instrument also supports SMF.

● Requirements for song data that can be loaded from a computer to this instrument

• Number of songs	: Up to 10 songs plus one user song
• Maximum data size	: Total 352 KB
• Data format	: SMF Format 0 and YDP-323.BUP (user song)

⚠ ***CAUTION***
Do not turn off the power to this instrument or unplug the instrument during data transmission.
Otherwise, the data being transmitted will not be saved. Furthermore, flash memory operation may become unstable, causing the entire memory to be erased when you turn the power to the instrument on or off.

Transmitting Song Data from the Digital Piano to a Computer

Musicsoft Downloader enables you to transfer the user song in this instrument to a computer. For more information on transferring song data from this instrument to a computer, please refer to "Transferring Data Between the Computer and Instrument (for unprotected data)" in the Help file that came with Musicsoft Downloader.

Before you use this instrument, close the Musicsoft Downloader window and quit the application.

● Data you can transfer from this instrument to a computer

• User song	: YDP-323.BUP
• Song data (once it has been loaded from the computer)	

■ MIDI IMPLEMENTATION CHART

YAMAHA [Digital Piano]
Model YDP-323 MIDI Implementation Chart

Date :08-APR-2005
Version : 1.0

Function...		Transmitted	Recognized	Remarks
Basic Channel	Default	1-16	1-16	
	Changed	x	1-16	
Mode	Default	3	3	
	Messages	x	x	
	Altered	**********	x	
Note Number :	True voice	0-127 **********	0-127 0-127	
Velocity	Note ON	o 9nH,v=1-127	o 9nH,v=1-127	
	Note OFF	x	x	
After Touch	Key's	x *1	x	
	Ch's	x	x	
Pitch Bend		x *1	o 0-24 semi	
Control Change	0,32	o	o	Bank Select
	1	x *1	o	Modulation
	7	o	o	Main Volume
	10	x *1	o	Panpot
	11	x *1	o	Expression
	6, 38	x *1	o	Data Entry
	64,66,67	o	o	
	84	x *1	o	Portament Control
	91,94	o	o	Effect Depth
	96-97	x *1	o	RPN Inc, Dec
	100-101	x *1	o	RPN LSB, MSB
Prog Change :	True #	o 0 - 127 **********	o 0 - 127	
System Exclusive		o	o	
Common	: Song Pos.	x	x	
	: Song Sel.	x	x	
	: Tune	x	x	
System	: Clock	o	o	
Real Time	: Commands	o	o	
Aux	: All Sound Off	o	o (120,126,127)	
Messages	: Reset All Cntrls	o	o (121)	
	: Local ON/OFF	x	o (122)	
	: All Notes OFF	o	o (123-125)	
	: Active Sense	o	o	
	: Reset	x	x	
Notes:		*1 These Control Change messages are not transmitted via panel operation, but may be transmitted during song playback.		

Mode 1 : OMNI ON, POLY
Mode 2 : OMNI ON, MONO
Mode 3 : OMNI OFF, POLY
Mode 4 : OMNI OFF, MONO

o : Yes
x : No

MIDI DATA FORMAT

If you're already very familiar with MIDI, or are using a computer to control your music hardware with computer-generated MIDI messages, the data provided in this section can help you to control this instrument.

1. NOTE ON/OFF

Data format: [9nH] -> [kk] -> [vv]

9nH = Note ON/OFF event (n = channel number)
kk = Note number (Transmit: 09H ~ 78H = A-2 ~ C8 / Receive: 00H ~ 7FH = C-2 ~ G8)
vv = Velocity (Key ON = 01H ~ 7FH, Key OFF = 00H)

Data format: [8nH] -> [kk] -> [vv] (reception only)

8nH = Note OFF event (n = channel number)
kk = Note number: 00H ~ 7FH = C-2 ~ G8)
vv = Velocity

2. CONTROL CHANGE

Data format: [BnH] -> [cc] -> [vv]

BnH = Control change (n = channel number)
cc = Control number
vv = Data Range

(1) Bank Select

ccH	Parameter	Data Range (vvH)
00H	Bank Select MSB	00H:Normal
20H	Bank Select LSB	00H...7FH

Bank selection processing does not occur until receipt of next Program Change message.

(2) Main Volume

ccH	Parameter	Data Range (vvH)
07H	Volume MSB	00H...7FH

(3) Expression (reception only)

ccH	Parameter	Data Range (vvH)
0BH	Expression MSB	00H...7FH

(4) Damper

ccH	Parameter	Data Range (vvH)
40H	Damper MSB	00H...7FH

(5) Sostenuto

ccH	Parameter	Data Range (vvH)
42H	Sostenuto	00H-3FH:off, 40H-7FH:on

(6) Soft Pedal

ccH	Parameter	Data Range (vvH)
43H	Soft Pedal	00H-3FH:off, 40H-7FH:on

(7) Effect1 Depth (Reverb Send Level)

ccH	Parameter	Data Range (vvH)
5BH	Effect1 Depth	00H...7FH

Adjusts the reverb send level.

(8) Effect4 Depth (Variation Effect Send Level)

ccH	Parameter	Data Range (vvH)
5EH	Effect4 Depth	00H...7FH

(9) RPN

65H	RPN	MSB
64H	RPN	LSB
06H	Data Entry	MSB
26H	Data Entry	LSB
60H	Data	Increment
61H	Data	Decrement

* Parameters that are controllable with RPN
- Coarse Tune
- Fine Tune
- Pitch Bend Range

3. MODE MESSAGES

Data format: [BnH] -> [cc] -> [vv]

BnH = Control event (n = channel number)
cc = Control number
vv = Data Range

(1) All Sound Off

ccH	Parameter	Data Range (vvH)
78H	All Sound Off	00H

(2) Reset All Controllers

ccH	Parameter	Data Range (vvH)
79H	Reset All Controllers	00H

Resets controllers as follows.

Controller	Value
Expression	127 (max)
Damper Pedal	0 (off)
Sostenuto	0 (off)
Soft Pedal	0 (off)

(3) Local Control (reception only)

ccH	Parameter	Data Range (vvH)
7AH	Local Control	00H (off), 7FH (on)

(4) All Notes Off

ccH	Parameter	Data Range (vvH)
7BH	All Notes Off	00H

Switches OFF all the notes that are currently ON on the specified channel. Any notes being held by the damper or sostenuto pedal will continue to sound until the pedal is released.

(5) Omni Off (reception only)

ccH	Parameter	Data Range (vvH)
7CH	Omni Off	00H

Same processing as for All Notes Off.

(6) Omni On (reception only)

ccH	Parameter	Data Range (vvH)
7DH	Omni On	00H

Same processing as for All Notes Off.

(7) Mono (reception only)

ccH	Parameter	Data Range (vvH)
7EH	Mono	00H

Same processing as for All Sound Off.

(8) Poly (reception only)

ccH	Parameter	Data Range (vvH)
7FH	Poly	00H

Same processing as for All Sound Off.

- When Control Change is turned OFF, Control Change messages will not be transmitted or received.
- Local on/off, OMNI on/off are not transmitted. (The appropriate note off number is supplied with "All Note Off" transmission).
- When a voice bank MSB/LSB is received, the number is stored in the internal buffer regardless of the received order, then the stored value is used to select the appropriate voice when a program change message is received.
- Poly mode is always active. This mode will not change when the instrument receives MONO/POLY mode message.

4. PROGRAM CHANGE

Data format: [CnH] -> [ppH]

CnH = Program event (n = channel number)
ppH = Program change number
P.C.#=Program Change number

YDP-151/YDP-323	MSB	LSB	P.C.#
Grand Piano 1	0	122	1
Grand Piano 2	0	112	1
E.Piano 1	0	122	6
E.Piano 2	0	122	5
Harpsichord 1	0	122	7
Harpsichord 2	0	123	7
Vibraphone	0	122	12
Church Organ 1	0	123	20
Church Organ 2	0	122	20
Strings	0	122	49

- When program change reception is turned OFF, no program change data is transmitted or received.
- When you specify a program change as a number in the range of 0-127, specify a number that is one less than the program change number listed above. For example, to specify program change number 1, you would specify program change 0.

5. Pitch Bend Change

[EnH] -> [ccH] -> [ddH]
ccH = LSB
ddH = MSB

6. SYSTEM REALTIME MESSAGES

[rrH]
F8H: Timing clock
FAH: Start
FCH: Stop
FEH: Active sensing

Data	Transmission	Reception
F8H	Transmitted every 96 clocks	Received as 96-clock tempo timing when MIDI clock is set to External.
FAH	Song start	Song start Not received when the MIDI clock is set to Internal.
FCH	Song stop	Song stop Not received when the MIDI clock is set to Internal.
FEH	Transmitted every 200 milliseconds	If a signal is not received via MIDI for more than 400 milliseconds, the same processing will take place for All Sound Off, All Notes Off and Reset All Controllers as when those signals are received.

- If an error occurs during MIDI reception, the Damper, Sostenuto, and Soft effects for all channels are turned off and an All Note Off occurs.

7. SYSTEM EXCLUSIVE MESSAGES (Universal System Exclusive)

(1) Universal Realtime Message

Data format: [F0H] -> [7FH] -> [XnH] -> [04H] -> [01H] -> [llH] -> [mmH] -> [F7H]

MIDI Master Volume

- Simultaneously changes the volume of all channels.
- When a MIDI master volume message is received, the volume only has affect on the MIDI receive channel, not the panel master volume.

F0H = Exclusive status
7FH = Universal Realtime
7FH = ID of target device
04H = Sub-ID #1=Device Control Message
01H = Sub-ID #2=Master Volume
*ll*H = Volume LSB
mmH = Volume MSB
F7H = End of Exclusive

or

F0H = Exclusive status
7FH = Universal Realtime
XnH = When n is received n=0~F, whichever is received.
X = don't care
04H = Sub-ID #1=Device Control Message
01H = Sub-ID #2=Master Volume
*ll*H = Volume LSB
mmH = Volume MSB
F7H = End of Exclusive

(2) Universal Non-Realtime Message (GM On)

General MIDI Mode On

Data format: [F0H] -> [7EH] -> [XnH] -> [09H] -> [01H] -> [F7H]

F0H = Exclusive status
7EH = Universal Non-Realtime
7FH = ID of target device
09H = Sub-ID #1=General MIDI Message
01H = Sub-ID #2=General MIDI On
F7H = End of Exclusive

or

F0H = Exclusive status
7EH = Universal Non-Realtime
XnH = When received, n=0~F.
X = don't care
09H = Sub-ID #1=General MIDI Message
01H = Sub-ID #2=General MIDI On
F7H = End of Exclusive

When the General MIDI mode ON message is received, the MIDI system will be reset to its default settings.
This message requires approximately 50ms to execute, so sufficient time should be allowed before the next message is sent.

8. SYSTEM EXCLUSIVE MESSAGES (XG Standard)

(1) XG Native Parameter Change

Data format: [F0H] -> [43H] -> [1nH] -> [4CH] -> [hhH] -> [mmH] -> [*ll*H] -> [ddH] -> [F7H]

F0H = Exclusive status
43H = YAMAHA ID
1nH = When received, n=0~F.
When transmitted, n=0.
4CH = Model ID of XG
hhH = Address High
mmH = Address Mid
*ll*H = Address Low
ddH = Data
|
F7H = End of Exclusive

Data size must match parameter size (2 or 4 bytes).
When the XG System On message is received, the MIDI system will be reset to its default settings.
The message requires approximately 50ms to execute, so sufficient time should be allowed before the next message is sent.

(2) XG Native Bulk Data (reception only)

Data format: [F0H] -> [43H] -> [0nH] -> [4CH] -> [aaH] -> [bbH] -> [hhH] -> [mmH] -> [*ll*H] ->[ddH] ->...-> [ccH] -> [F7H]

F0H = Exclusive status
43H = YAMAHA ID
0nH = When received, n=0~F.
When transmitted, n=0.
4CH = Model ID of XG
aaH = ByteCount
bbH = ByteCount
hhH = Address High
mmH = Address Mid
*ll*H = Address Low
ddH = Data
| |
| |
ccH = Check sum
F7H = End of Exclusive

- Receipt of the XG SYSTEM ON message causes reinitialization of relevant parameters and Control Change values. Allow sufficient time for processing to execute (about 50 msec) before sending this instrument another message.
- XG Native Parameter Change message may contain two or four bytes of parameter data (depending on the parameter size).
- For information about the Address and Byte Count values, refer to Table 1 below. Note that the table's Total Size value gives the size of a bulk block. Only the top address of the block (00H, 00H, 00H) is valid as a bulk data address.

9. SYSTEM EXCLUSIVE MESSAGES (Digital Piano MIDI Format)

Data format: [F0H] -> [43H] -> [73H] -> [xxH] -> [nnH] -> [F7H]

F0H = Exclusive status
43H = Yamaha ID
73H = Digital Piano ID
01H = Product ID (digital piano common)
xxH = Substatus
nn Control
02H Internal MIDI clock
03H External MIDI clock
06H Bulk Data (the bulk data follows 06H)
F7H = End of Exclusive

10. SYSTEM EXCLUSIVE MESSAGES (Special Control)

Data format: [F0H] -> [43H] -> [73H] -> [66H] -> [11H] -> [0nH] -> [ccH] -> [vvH] -> [F7H]

F0H = Exclusive status
43H = Yamaha ID
73H = Digital Piano ID
7FH = Extended Product ID
4BH = Product ID
11H = Special control
0nH = Control MIDI change (n=channel number)
cc = Control number
vv = Value
F7H = End of Exclusive

Control	Channel	ccH	vvH
Metronome	Always 00H	1BH	00H : off 01H : – 02H : 2/4 03H : 3/4 04H : 4/4 05H : 5/4 06H : 6/4 7FH : No accent
Channel Detune	ch: 00H-0FH	43H	(Sets the Detune value for each channel) 00H-7FH
Voice Reserve	ch: 00H-0FH	45H	00H : Reserve off 7FH : on*

* When Volume, Expression is received for Reserve On, they will be effective from the next Key On. Reserve Off is normal.

11. SYSTEM EXCLUSIVE MESSAGES (Others)

Data format: [F0H] -> [43H] -> [1nH] -> [27H] -> [30H] -> [00H] -> [00H] -> [mmH] -> [*ll*H] -> [ccH] -> [F7H]

Master Tuning (XG and last message priority) simultaneously changes the pitch of all channels.
F0H = Exclusive Status
43H = Yamaha ID
1nH = When received, n=0~F.
When transmitted, n=0.
27H = Model ID of TG100
30H = Sub ID
00H =
00H =
mmH = Master Tune MSB
*ll*H = Master Tune LSB
ccH = don't care (under 7FH)
F7H = End of Exclusive

<Table 1>

MIDI Parameter Change table (SYSTEM)

Address (H)	Size (H)	Data (H)	Parameter	Description	Default value (H)
00 00 00	4	020C - 05F4(*1)	MASTER TUNE	-50 - +50[cent]	00 04 00 00
01				1st bit 3 - 0 → bit 15 - 12	400
02				2nd bit 3 - 0 → bit 11 - 8	
03				3rd bit 3 - 0 → bit 7 - 4	
				4th bit 3 - 0 → bit 3 - 0	
04	1	00 - 7F	MASTER VOLUME	0 - 127	7F
7E		00	XG SYSTEM ON	00=XG sytem ON	
7F		00	RESET ALL PARAMETERS	00=ON (receive only)	

TOTAL SIZE 07

*1: Values lower than 020CH select -50 cents. Values higher than 05F4H select +50 cents.

<Table 2>

MIDI Parameter Change table (EFFECT 1)

Refer to the “Effect MIDI Map” for a complete list of Reverb, Chorus and Variation type numbers.

Address (H)	Size (H)	Data (H)	Parameter	Description	Default value (H)
02 01 00	2	00-7F	REVERB TYPE MSB	Refer to Effect MIDI Map	01(=HALL1)
		00-7F	REVERB TYPE LSB	00 : basic type	00
02 01 40	2	00-7F	VARIATION TYPE MSB	Refer to Effect MIDI Map	00(=Effect off)
		00-7F	VARIATION TYPE LSB	00 : basic type	00

• “VARIATION” refers to the EFFECT on the panel.

<Table 3>

MIDI Parameter Change table (MULTI PART)

Address (H)	Size (H)	Data (H)	Parameter	Description	Default value (H)
08 nn 11	1	00 - 7F	DRY LEVEL	0 - 127	7F

nn = Part Number

• Effect MIDI Map

REVERB

	MSB	LSB
ROOM	02H	10H
HALL 1	01H	10H
HALL 2	01H	11H
STAGE	03H	10H
OFF	00H	00H

EFFECT

	MSB	LSB
CHORUS	42H	10H
PHASER	48H	10H
TREMOLO	46H	10H
ROTARY SP	47H	10H
OFF	00H	00H

DIGITAL PIANO
YDP-323
PARTS LIST

■ CONTENTS

OVERALL ASSEMBLY **2**
MAIN UNIT **4**
MUSIC REST ASSEMBLY **9**
TOP BOARD ASSEMBLY **10**
KEY COVER ASSEMBLY **11**
ARM ASSEMBLY **12**
SIDE BOARD ASSEMBLY **14**
END BLOCK ASSEMBLY L **16**
END BLOCK ASSEMBLY R **17**
HEADPHONES JACK ASSEMBLY **17**
D-JACK ASSEMBLY **18**
POWER SUPPLY UNIT **19**
PEDAL BOX ASSEMBLY **20**
PEDAL ASSEMBLY **21**
KEYBOARD ASSEMBLY **22**
BENCH (BC-100DR) **24**
ELECTRICAL PARTS ..... **25~34**

Notes : DESTINATION ABBREVIATIONS

A : Australian model	M : South African model
B : British model	O : Chinese model
C : Canadian model	Q : South-east Asia model
D : German model	T : Taiwan model
E : European model	U : U.S.A. model
F : French model	V : General export model (110V)
H : North European model	W: General export model (220V)
I : Indonesian model	N,X: General export model
J : Japanese model	Y : Export model
K : Korean model	

■ WARNING

Components having special characteristics are marked ⚠ and must be replaced with parts having specification equal to those originally installed.

- The numbers “QTY” show quantities for each unit.
- The parts with “--” in “**PART NO.**” are not available as spare parts.
- This mark “ } ” in the REMARKS column means these parts are interchangeable.
- The second letter of the shaded ( ) part number is O, not zero.
- The second letter of the shaded ( ) part number is I, not one.

OVERALL ASSEMBLY

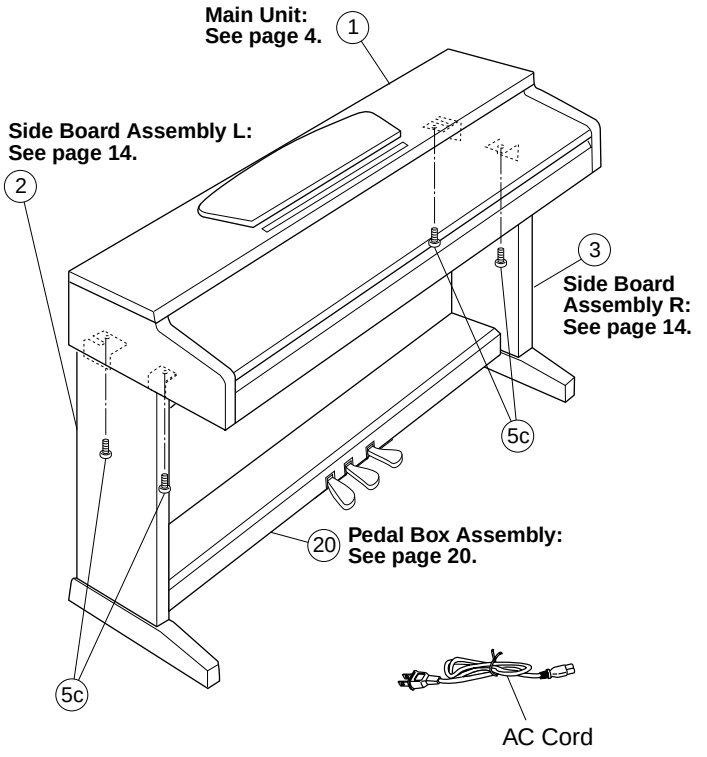

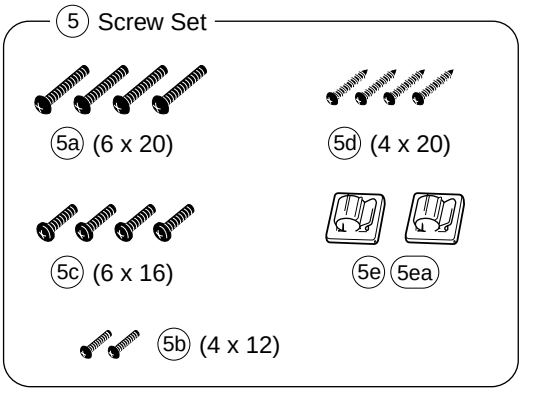

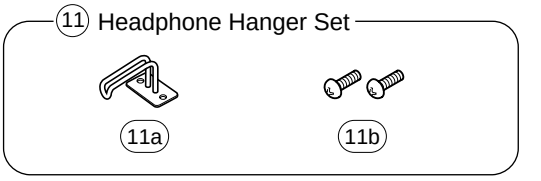

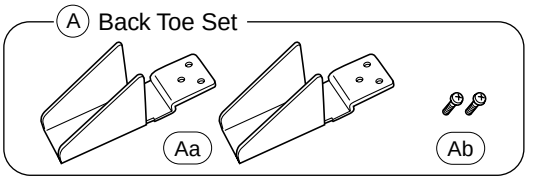

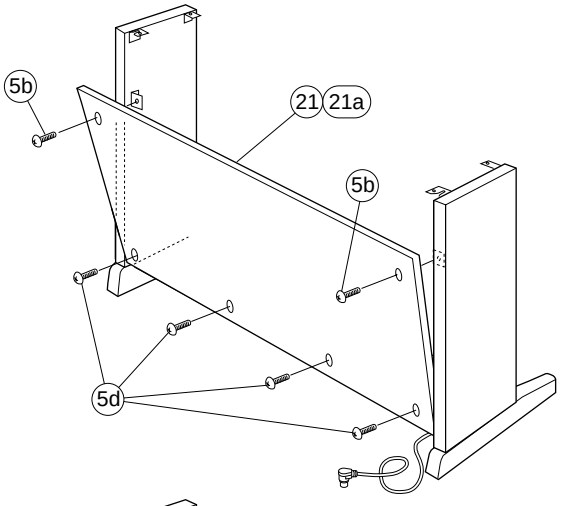

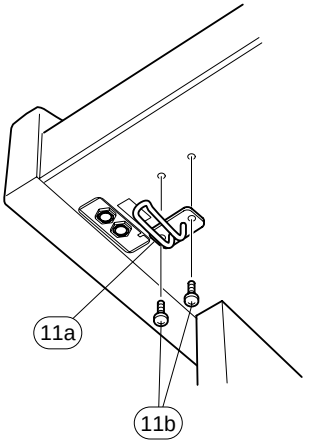

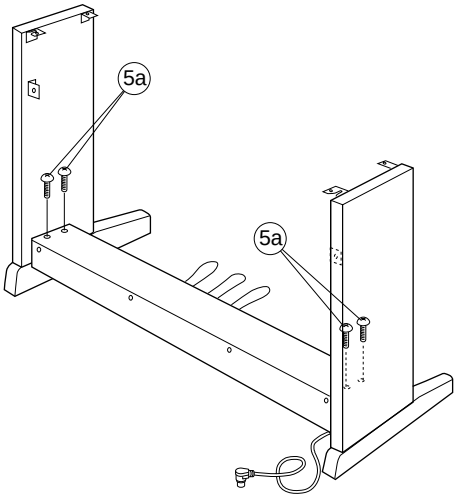

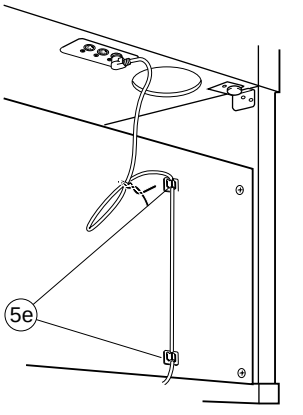

	REF NO.	PART NO.	DESCRIPTION			REMARKS	QTY	RANK
			OVERALL ASSEMBLY			YDP-323		
	1	--	Main Unit			U (WE89470)		
	2	--	Side Board Assembly L	LEFT		(WE91870)		
	3	--	Side Board Assembly R	RIGHT		(WE91930)		
*	5	**WF788800**	Screw Set					
*	5a	**WF001300**	Truss Head Screw	6.0X20 MFZN2B3			4	
*	5b	**WE997700**	Truss Head Screw	4.0X12 MFZN2B3			2	
*	5c	**WE969400**	Bind Head Screw	6.0X16 MFZN2B3			4	
*	5d	**WE998900**	PW Head Tapping Screw-1	4.0X20 MFZN2B3			4	
	5e	**VR410300**	Cord Clamp Set					03
	5ea	**VP592100**	Cord Clamper	DKN-5(VHB)			2	03
	11	**V8740600**	Headphone Hanger Set					07
	11a	**V8972600**	Headphone Hanger					04
*	11b	**WF000800**	Truss Head Screw	4.0X10 MFZN2B3			2	
	20	--	Pedal Box Assembly			(WE92480)		
*	21	**WE926700**	Back Board Set Black					
	21a	--	Felt			(WF87070)	2	
			ACCESSORIES					
⚠		**V2917000**	AC Cord	U 2P 2.44m 7A		U		06
		V5531400	Bench	BC-100DR				20
*	A	**WF228600**	Back Toe Set					
	Aa	--	Back Toe			(WF22870)	2	
*	Ab	**WE974500**	Bind Head Tapping Screw-B	4.0X10 MFZN2W3			2	
			TOOL					
		TX000670	Rod					99

*: New Parts

RANK: Japan only

MAIN UNIT

● **Rear view**

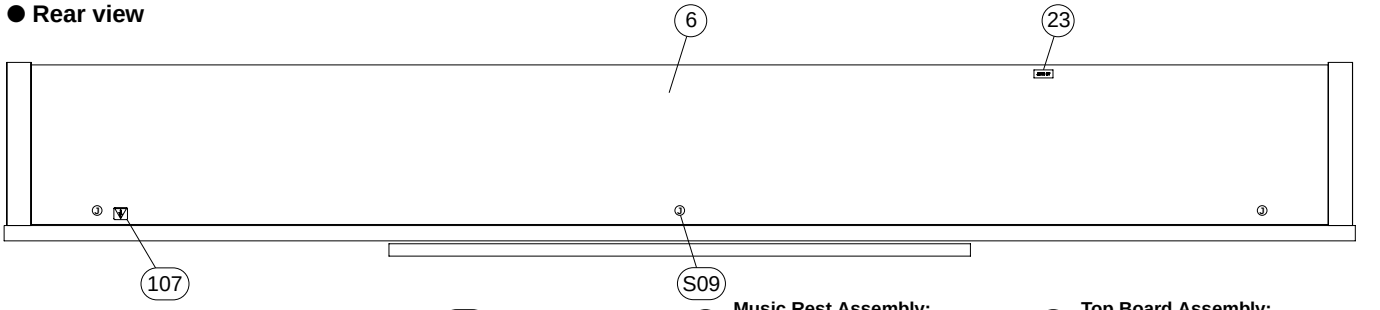

● **Top view 1**

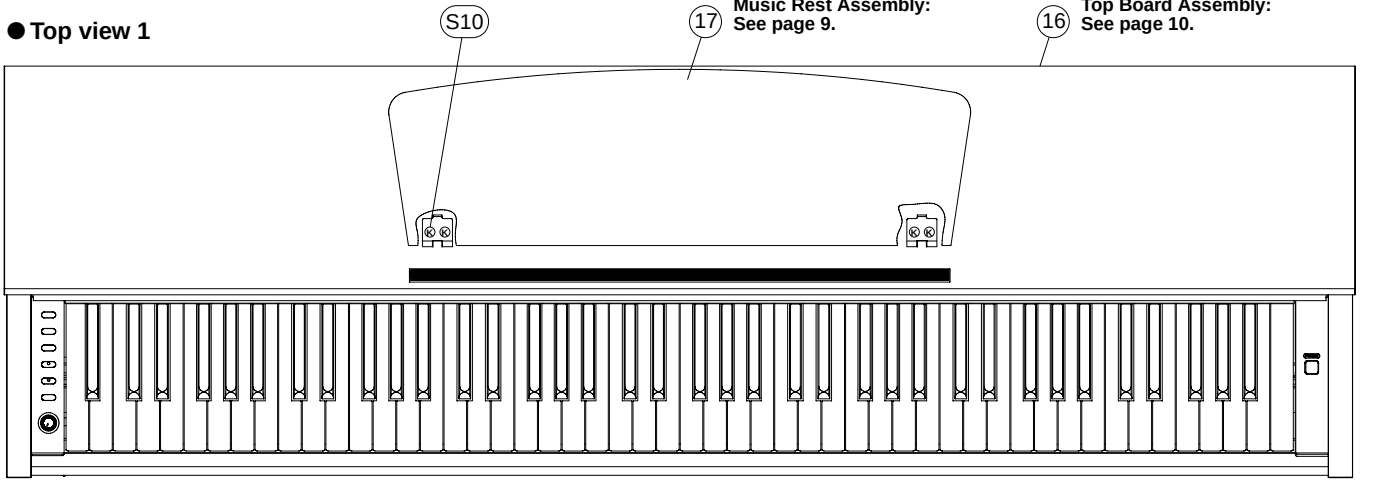

● **Top view 2**

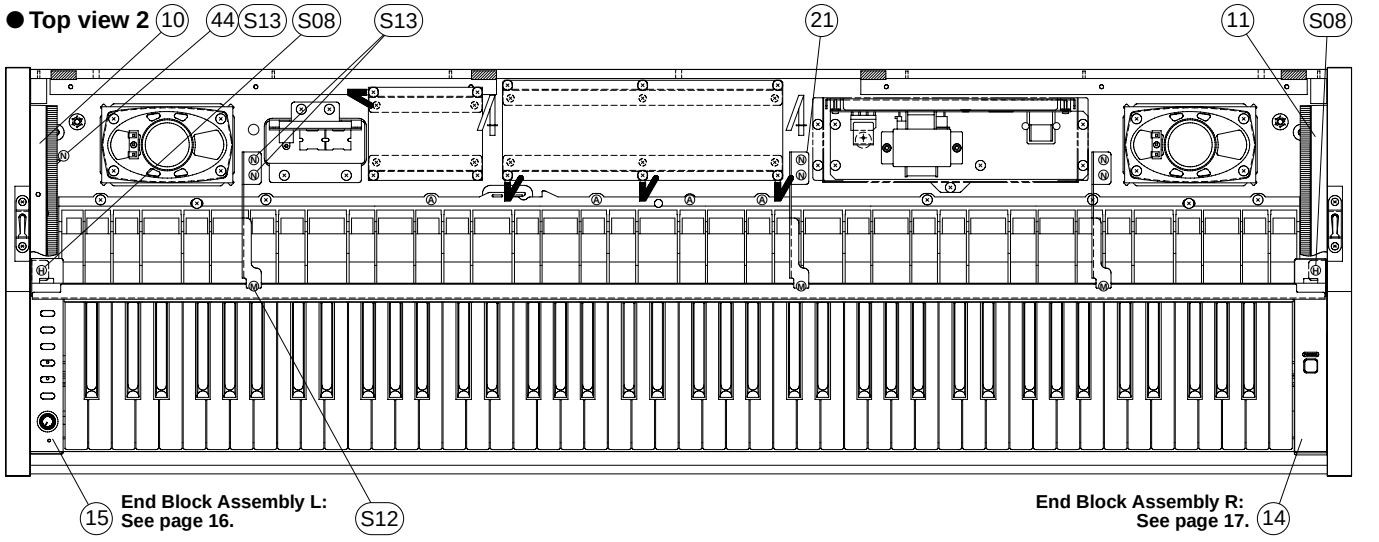

● **Side view**

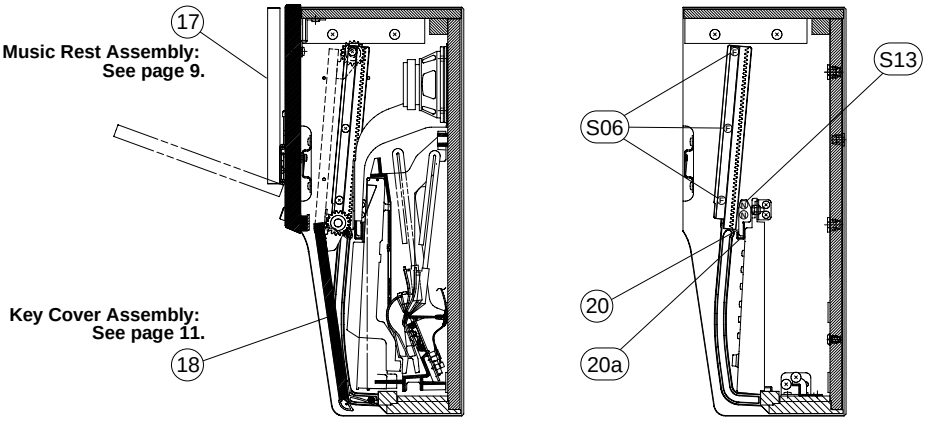

LOCATION	SYMBOL
S06	F
S08	H
S09	J
S10	K
S12	M
S13	N

● **Bottom view**

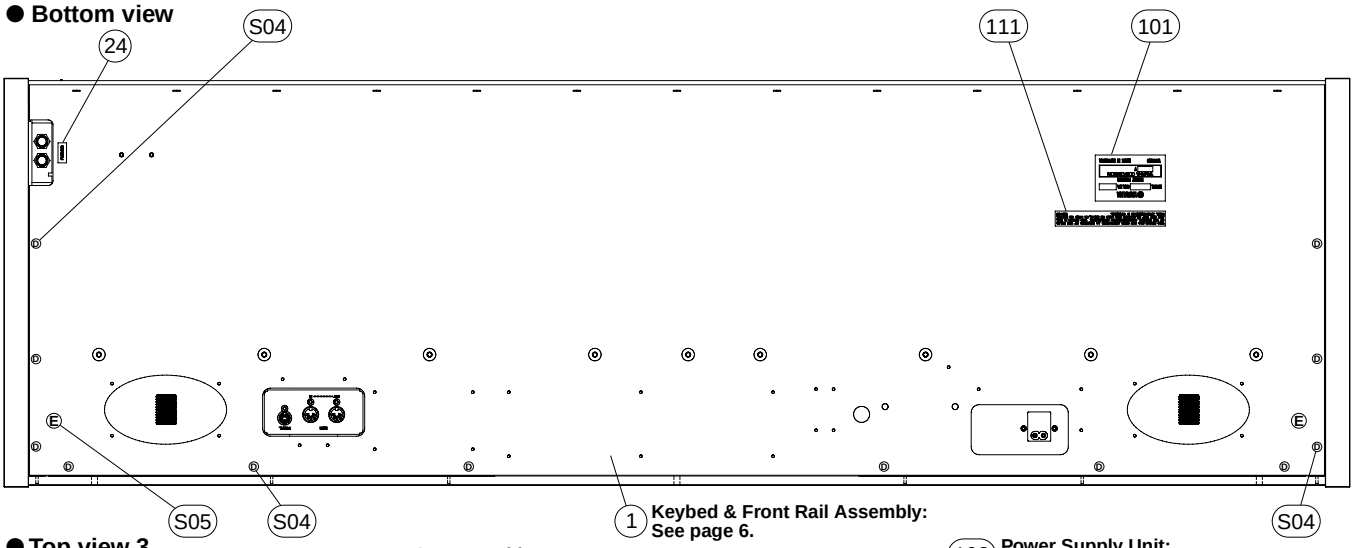

1 **Keybed & Front Rail Assembly: See page 6.**

● **Top view 3**

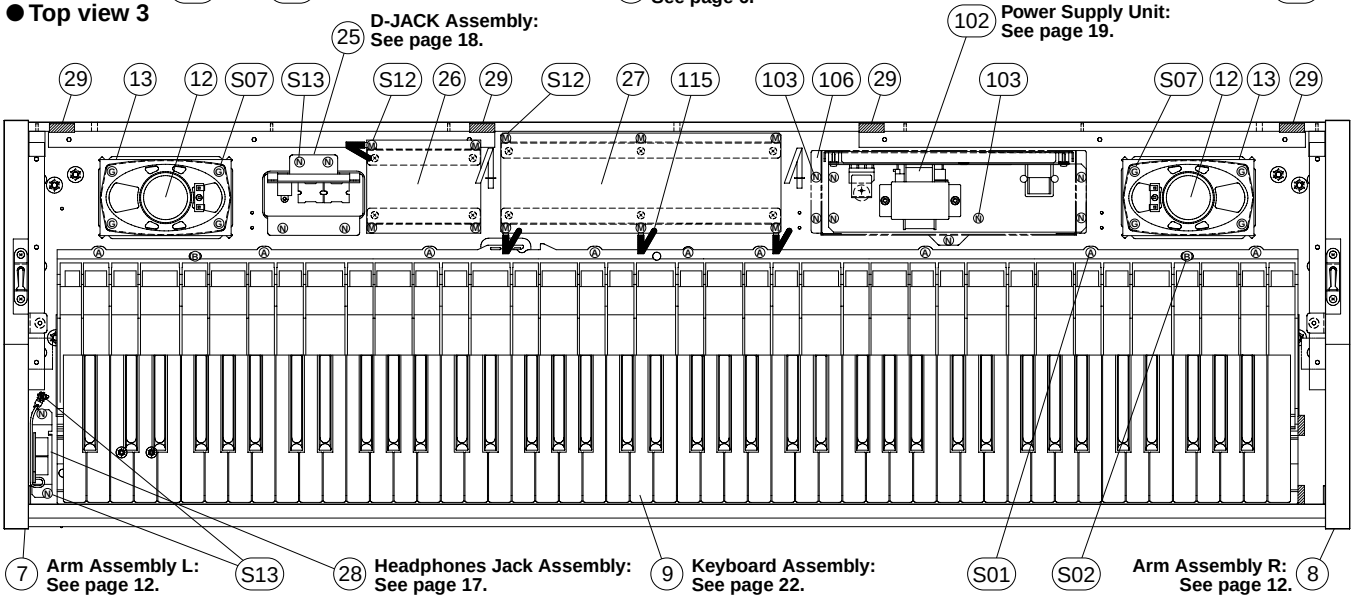

25 **D-JACK Assembly: See page 18.**

102 **Power Supply Unit: See page 19.**

7 **Arm Assembly L: See page 12.**

S13

28 **Headphones Jack Assembly: See page 17.**

9 **Keyboard Assembly: See page 22.**

S01

S02

Arm Assembly R: See page 12. 8

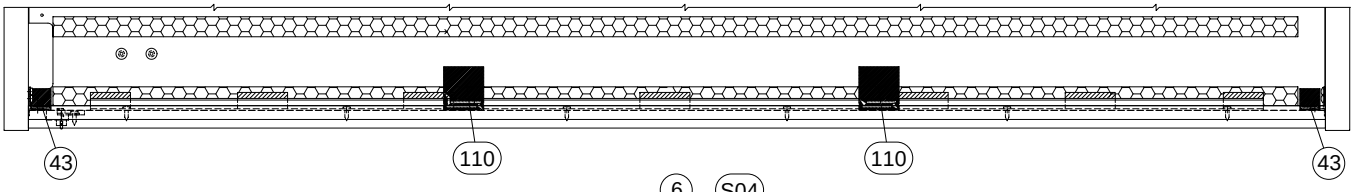

● **Side view**

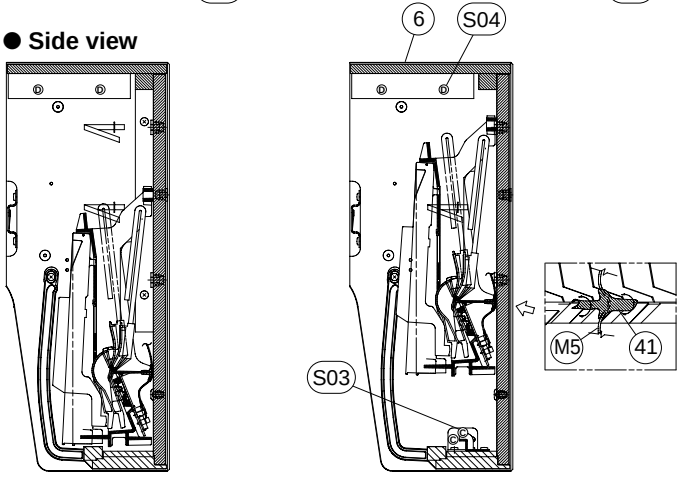

LOCATION	SYMBOL
S01	A
S02	B
S03	C
S04	D
S05	E

LOCATION	SYMBOL
S07	G
S12	M
S13 103	N

● Keybed & Front Rail Assembly

● Keybed Assembly

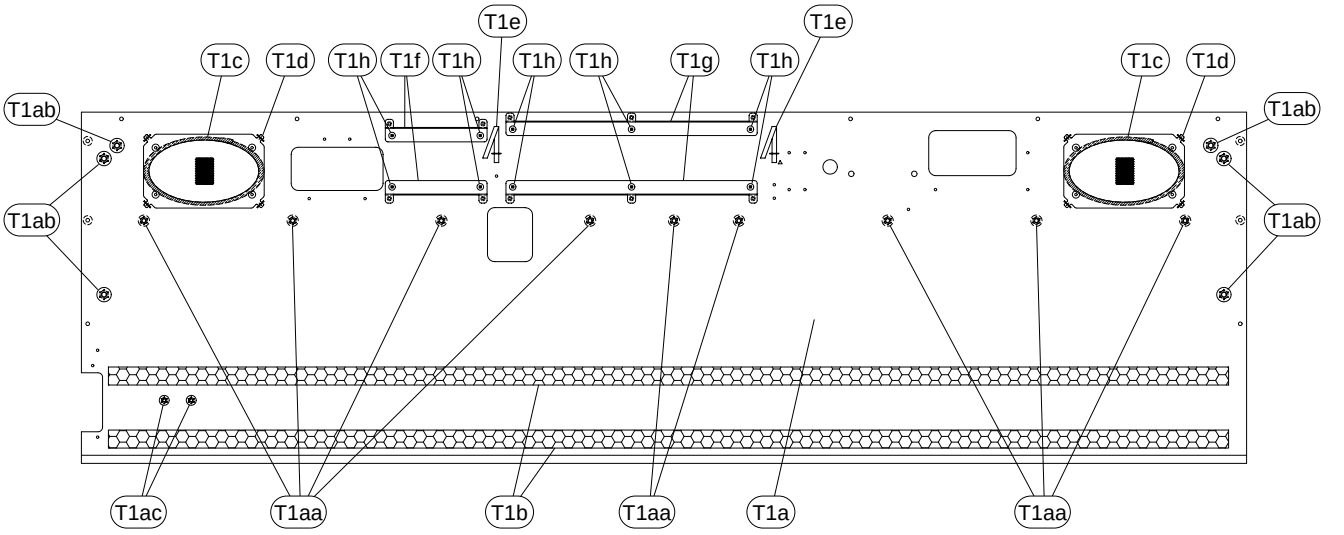

● Front Rail Assembly

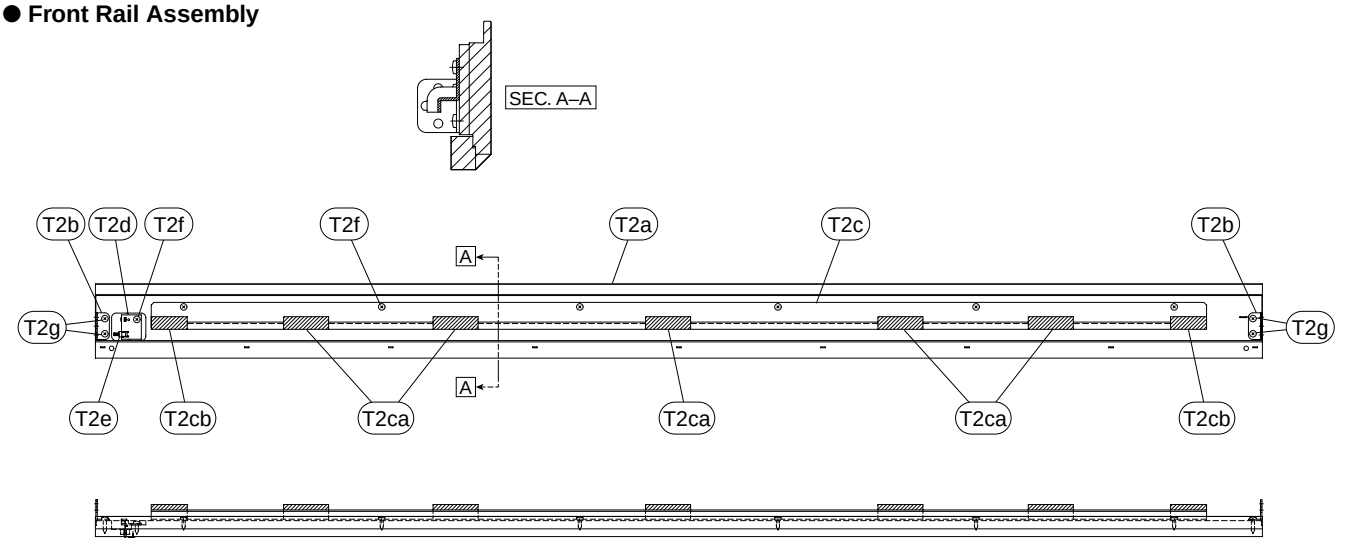

	REF NO.	PART NO.	DESCRIPTION			REMARKS	QTY	RANK
			MAIN UNIT			YDP-323		
		--	Main Unit			U (WE89470)		
	100	--	Composite Common Parts			(WE89560)		
	101	--	Name Plate			U (WF82830)		
	102	--	Power Supply Unit	U		U (WF16800)		
*	103	WE970900	Bind Head Tapping Screw-1	3.5X12 MFZN2W3			8	
	106	V9559700	PS Cover Assembly					
	107	V8462100	Graphic Mark	YMMA				
	107	VB951400	Graphic Mark	MKX-5 UL				03
	110	--	Electrical Adhesive Tape	AL-400 40X20m		(WA53090)		
	111	--	Label, FCC			(V279410)		
	115	CB817510	Cord Binder	S-14B-E			4	03
	120	--	Cable Assembly	MAIN		(WE95270)		
		--	Composite Common Parts			(WE89560)		
*	1	WF737800	Keybed&Front Rail Assembly	(WE89580+WE89830)				
*	6	WE899500	Back Top Board Assembly					
*	7	WE900900	Arm Assembly L	LEFT				
*	8	WE901500	Arm Assembly R	RIGHT				
	9	V8278500	Keyboard Assembly	GHD_EBUS A88 K6				51
	10	V8518500	Rack L	LEFT				02
	11	V8518600	Rack R	RIGHT				02
*	12	X6684A00	Speaker	F3E5A13-1 4ohm 10W			2	
	13	--	Cushion			(V861680)	2	
	14	V8733300	End Block Assembly R	RIGHT				08
	15	--	End Block Assembly L	LEFT		(WE90470)		
*	16	WE906400	Top Board Assembly					
*	17	WE911900	Music Rest Assembly					
*	18	WE914600	Key Cover Assembly					
*	20	WE916100	Stopper Rail Assembly					
	20a	--	Felt			(WF44600)		
	21	--	Angle, Z			(V907120)	3	
	23	VT501000	Label					03
	24	--	Label, PHONES			(VS47810)		
	25	--	D-JACK Assembly			(WE91680)		
*	26	WE909700	Circuit Board	DM				
*	27	WE745000	Circuit Board	MAEQ				
	28	--	Headphones Jack Assembly			(WC04600)		
	29	--	Felt	25X25X1 N5000NS		(V591600)	4	
	41	VP834600	Adhesive Tape	12X50				05
	43	--	Electrical Adhesive Tape	AL-400 40X20m		(WA53090)		
	44	CB817510	Cord Binder	S-14B-E				03
*	S01	WF001500	Pan Head Screw	5.0X25 MFZN2W3 SW			9	
*	S02	WE971900	Bind Head Tapping Screw-1	4.0X14 MFZN2W3			2	
*	S03	WE970700	Bind Head Tapping Screw-1	3.5X16 MFZN2W3			4	
*	S04	WE970200	Truss Head Tapping Screw-1	3.5X25 MFZN2W3			16	
*	S05	WF742400	Guide Screw	6.0X20. 3-14			2	
*	S06	WE971500	Bind Head Tapping Screw-1	3.5X20 MFZN2W3			6	
*	S07	WE965700	Truss Head Tapping Screw-1	4.0X16 MFZN2W3			8	
*	S08	WE974500	Bind Head Tapping Screw-B	4.0X10 MFZN2W3			2	
*	S09	WE977600	Truss Head Screw	4.0X16 MFZN2B3			3	
*	S10	WE971200	Bind Head Tapping Screw-1	3.0X16 MFZN2B3			4	
	S12	WE936300	Bind Head Tapping Screw-B	3.0X6 MFZN2W3			13	01
*	S13	WE970900	Bind Head Tapping Screw-1	3.5X12 MFZN2W3			18	
		--	Cable Assembly	MAIN		(WE95270)		
		CB069250	Cord Holder	BK-1			3	01
	M1	--	Connector Assembly	PH 4P-350		(WE30650)		
	M2	--	Connector Assembly	MIDI 5P-250		(WE95320)		
	M3	--	Connector Assembly	PH 5P-350		(WE30950)		
	M4	--	Connector Assembly	PH 11P-150		(WE32710)		
*	M5	WF740600	Connector Assembly	KB 7P-530				
	M6	--	Connector Assembly	PS XH-5P		(WE95330)		
	M7	--	Connector Assembly	PH 7P-850		(WE31650)		
	M8	--	Connector Assembly	SP VH-4P		(WE95310)		
	M9	VP834600	Adhesive Tape	12X50				05
*		WF737800	Keybed&Front Rail Assembly	(WE89580+WE89830)				
	T1	--	Keybed Assembly			(WE89580)		
	T1a	--	Keybed Assembly			(WE89600)		

*: New Parts

RANK: Japan only

	REF NO.	PART NO.	DESCRIPTION		REMARKS	QTY	RANK
*	T1aa	**WF738300**	Nut	B 5.0X12 MFZN2W3		9	
*	T1ab	**WF582400**	Nut	6.0X12.5 B		6	
*	T1ac	**WF561000**	Nut	4.0X12.5 I		2	
	T1b	**VZ750500**	Cushion Black	GH		2	06
	T1c	**--**	Cushion	PEFU2X4X330TE-PUTS	(V890430)	2	
	T1d	**--**	Speaker Grille		(WF08450)	2	
	T1e	**VU891300**	Cord Holder Black	L=80		2	03
	T1f	**--**	Holder, DM		(WE89700)	2	
	T1g	**--**	Holder, MA		(WE89760)	2	
*	T1h	**WE970900**	Bind Head Tapping Screw-1	3.5X12 MFZN2W3		10	
	T2	**--**	Front Rail Assembly		(WE89830)		
	T2a	**--**	Front Rail		(WF30030)		
	T2b	**V5263500**	Holder, Rail	K		2	
	T2c	**--**	Holder Assembly, Keyboard		(WF08480)		
	T2ca	**V4021000**	Cushion L	ON LE-20 T6X50X18		5	
	T2cb	**V4021100**	Cushion S	T6X40X18		2	
	T2d	**VN637600**	Circuit Board	PL	}		03
	T2d	**VU659100**	Circuit Board	PL	}		03
	T2e	**--**	Connector Assembly	PH 2P-150	(WE30010)		
*	T2f	**WE970900**	Bind Head Tapping Screw-1	3.5X12 MFZN2W3		7	
*	T2g	**WE970700**	Bind Head Tapping Screw-1	3.5X16 MFZN2W3		4	

*: New Parts

RANK: Japan only

MUSIC REST ASSEMBLY

● Side view ● Front view

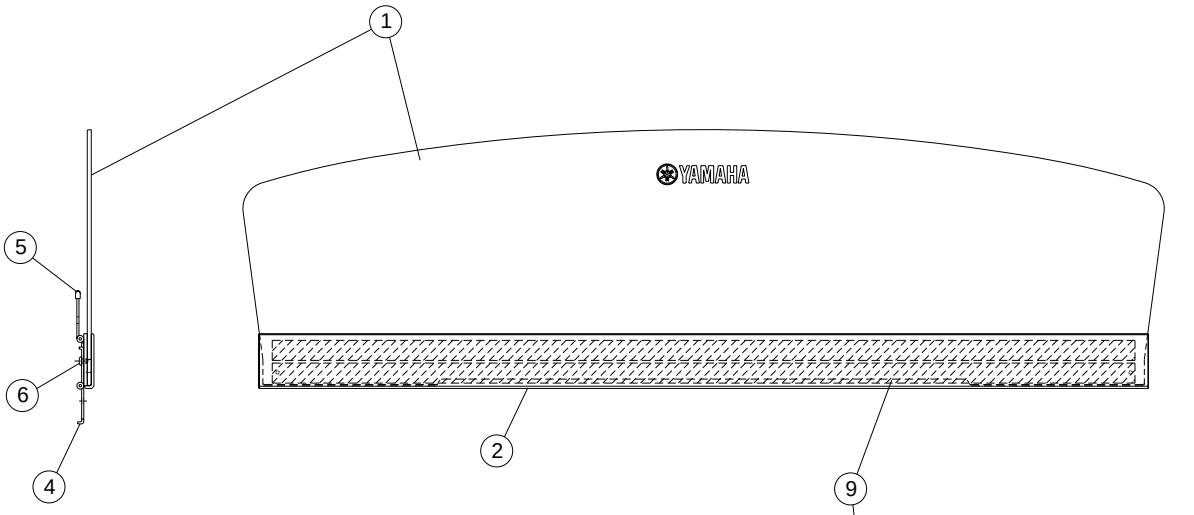

● Rear view

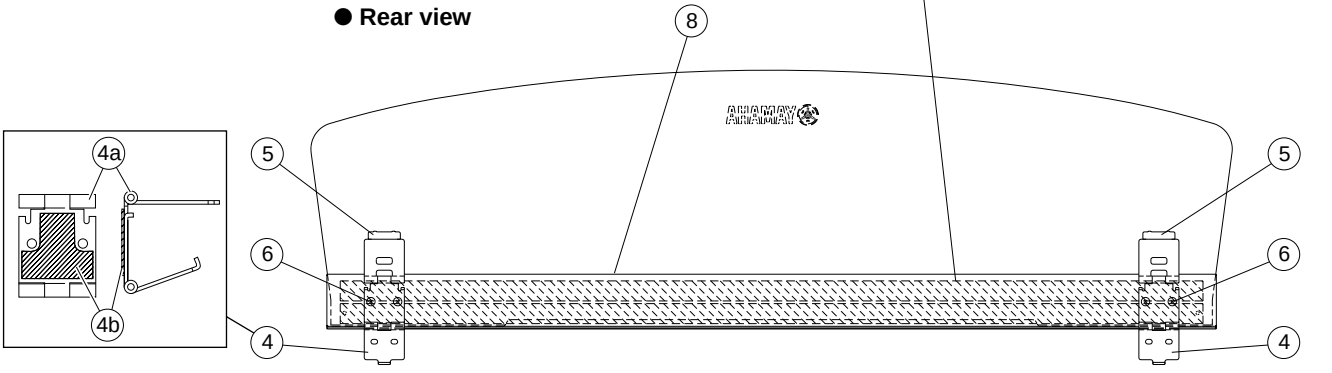

	REF NO.	PART NO.	DESCRIPTION			REMARKS	QTY	RANK
			MUSIC REST ASSEMBLY			YDP-323		
*		**WE911900**	Music Rest Assembly					
	1	**--**	Music Rest			(V804570)		
	2	**--**	Music Rest Rail F	FRONT		(WF22660)		
*	4	**WG263300**	Hinge Assembly				2	
	4a	**V8437600**	Hinge					05
	4b	**--**	Nonwoven Fabric Cloth			(WG26320)		
	5	**VV965900**	Cap				2	03
*	6	**WF105700**	Bind Head Screw	3.0X4 MFZN2B3			4	
	8	**--**	Music Rest Rail R	REAR		(WF47070)		
	9	**--**	Adhesive Tape	#500 W=15		(V861840)		

*: New Parts

RANK: Japan only

TOP BOARD ASSEMBLY

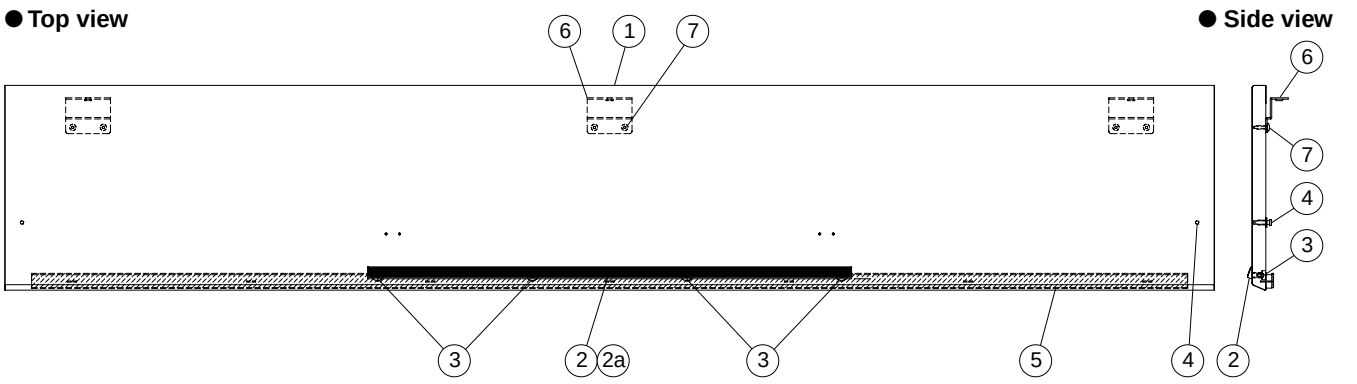

	REF NO.	PART NO.	DESCRIPTION			REMARKS	QTY	RANK
			TOP BOARD ASSEMBLY			YDP-323		
*		**WE906400**	Top Board Assembly					
	1	**--**	Top Board Assembly			(WE90760)		
*	2	**WF470300**	Stopper Rail, Music Score					05
	2a	**--**	Nonwoven Fabric Cloth	12X8X0.35		(V278050)	2	
*	3	**WF054600**	Screw	2.2X5.8 MFZN2W3			4	
*	4	**WF856700**	Strap Screw				2	
	5	**--**	Felt			(V991700)		
	6	**VQ485800**	Holder, Top Board	R			3	05
	7	**WE954600**	Bind Head Tapping Screw-1	3.5X14 MFZN2W3			6	01

*: New Parts

RANK: Japan only

KEY COVER ASSEMBLY

● **Bottom view**

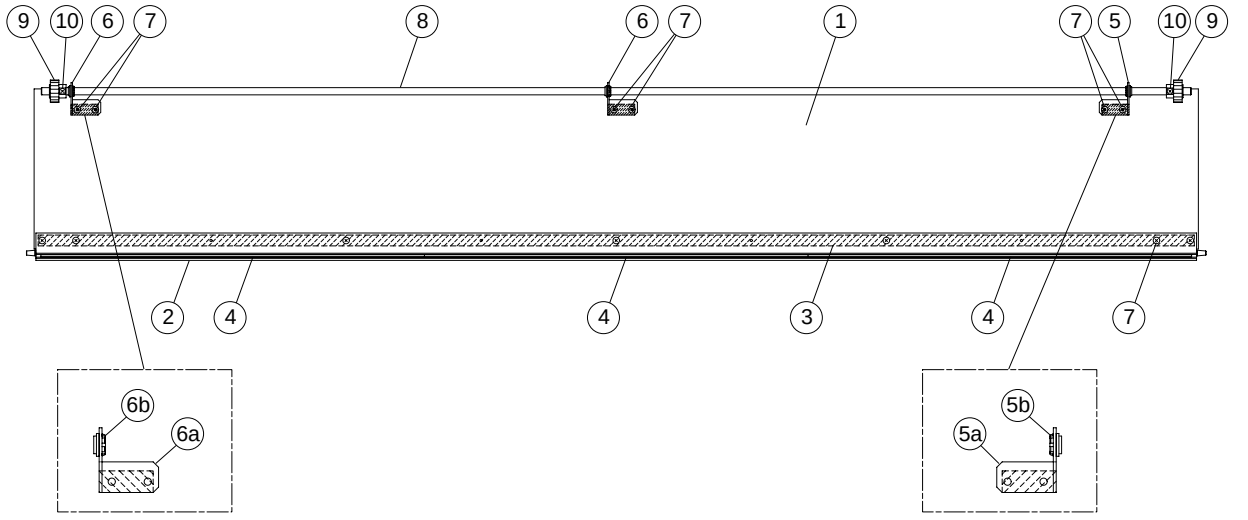

● **Sash Assembly F**

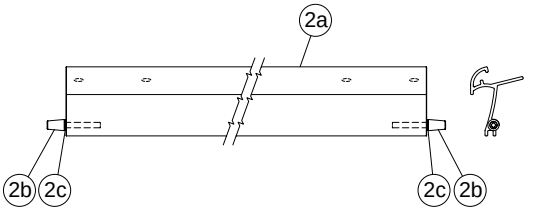

	REF NO.	PART NO.	DESCRIPTION			REMARKS	QTY	RANK
			KEY COVER ASSEMBLY			YDP-323		
*		**WE914600**	Key Cover Assembly					
	1	**--**	Slide Cover			(WE91510)		
*	2	**WE915800**	Sash Assembly F	FRONT				
	2a	**--**	Sash F	FRONT		(WE91590)		
*	2b	**WF875600**	Guide Pin	3.0X20 TP #B			2	
	2c	**--**	Spacer			(V549580)	2	
	3	**--**	Adhesive Tape	#500 W=12		(VE36310)		
	4	**V9465400**	Cushion	6X2.5XT4			3	01
	5	**V8901400**	Holder Assembly L	LEFT				
	5a	**VV285600**	Holder, Rod L	LEFT				03
	5b	**VS368500**	Bushing					03
	6	**V8901500**	Holder Assembly R	RIGHT			2	
	6a	**VV285700**	Holder, Rod R	RIGHT			2	03
	6b	**VS368500**	Bushing				2	03
*	7	**WE996700**	Bind Head Tapping Screw-1	3.5X8 MFZN2B3			13	
	8	**V8517000**	Rod					
	9	**V9857900**	Gear	M90S			2	01
*	10	**WE952900**	Bind Head Screw	3.0X10 MFZN2W3			2	

*: New Parts

RANK: Japan only

■ ARM ASSEMBLY

● **Top view**

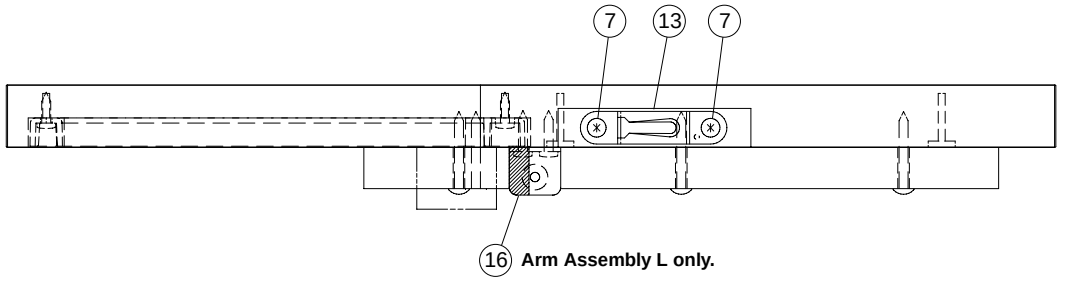

● **Side view**

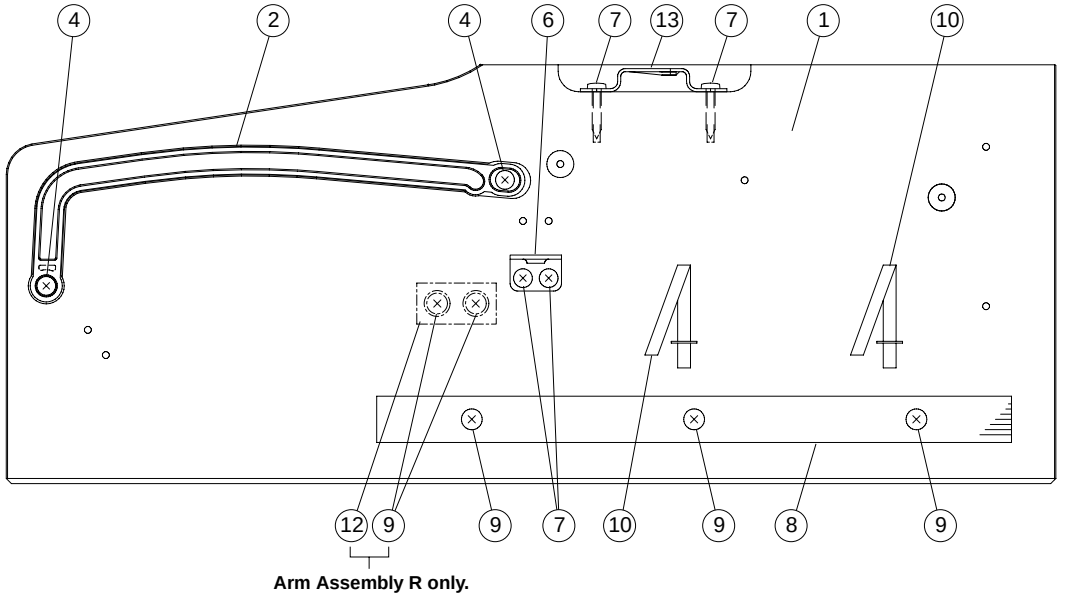

● **Front view**

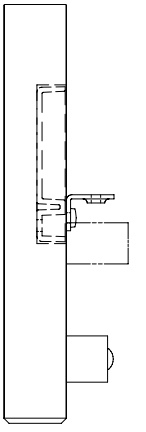

NOTE: This figure shows the left arm assembly.

● Arm Assembly L

	REF NO.	PART NO.	DESCRIPTION			REMARKS	QTY	RANK
			ARM ASSEMBLY L	LEFT		YDP-323		
*		**WE900900**	Arm Assembly L	LEFT				
	1	**--**	Side Cover L	LEFT		(WE90210)		
	2	**V8518100**	Guide Rail L	LEFT				03
*	4	**WE970900**	Bind Head Tapping Screw-1	3.5X12 MFZN2W3			2	
	6	**VN887000**	Angle Bracket					03
*	7	**WE970700**	Bind Head Tapping Screw-1	3.5X16 MFZN2W3			4	
	8	**--**	Crosspiece	T		(WF08500)		
*	9	**WE979900**	Truss Head Tapping Screw-1	3.5X30 MFZN2W3			3	
	10	**VU891300**	Cord Holder Black	L=80			2	03
	13	**WA218300**	Holder, Top Board	t1.20				01
	16	**--**	Adhesive Tape	ECT #590S W=15		(ZL35000)		

*: New Parts RANK: Japan only

● Arm Assembly R

	REF NO.	PART NO.	DESCRIPTION			REMARKS	QTY	RANK
			ARM ASSEMBLY R	RIGHT		YDP-323		
*		**WE901500**	Arm Assembly R	RIGHT				
	1	**--**	Side Cover R	RIGHT		(WE90270)		
	2	**V8518200**	Guide Rail R	RIGHT				03
*	4	**WE970900**	Bind Head Tapping Screw-1	3.5X12 MFZN2W3			2	
	6	**VN887000**	Angle Bracket					03
*	7	**WE970700**	Bind Head Tapping Screw-1	3.5X16 MFZN2W3			4	
	8	**--**	Crosspiece	T		(WF08500)		
*	9	**WE979900**	Truss Head Tapping Screw-1	3.5X30 MFZN2W3			5	
	10	**VU891300**	Cord Holder Black	L=80			2	03
	12	**--**	Crosspiece	P		(WF08510)		
	13	**WA218300**	Holder, Top Board	t1.20				01

*: New Parts RANK: Japan only

■ SIDE BOARD ASSEMBLY

● **Top view**

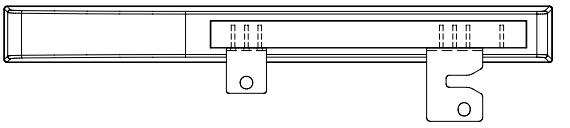

● **Front view** ● **Side view**

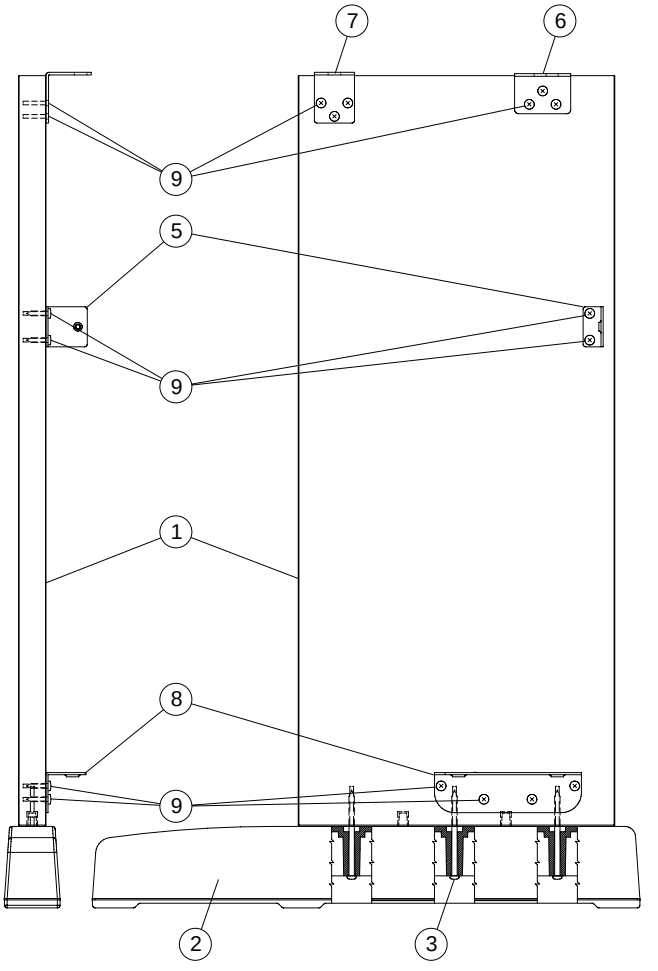

NOTE: This figure shows the left side board assembly.

● Side Board Assembly L

	REF NO.	PART NO.	DESCRIPTION			REMARKS	QTY	RANK
			SIDE BOARD ASSEMBLY L	LEFT		YDP-323		
		--	Side Board Assembly L	LEFT		(WE91870)		
*	1	**WE920100**	Side Board L	LEFT				
*	2	**WE923000**	Stand Base					
*	3	**WF514200**	Pan Head Tapping Screw-1	4.0X65 MFZN2W3			3	
	5	**VQ958300**	Holder, Back Board					05
	6	**VS295500**	Holder, Stand L	LEFT				05
	7	**VN973100**	Angle Bracket, ST					04
	8	**V9703500**	Holder, PB					02
*	9	**WE955100**	Bind Head Tapping Screw-1	3.5X16 MFZN2B3			12	

*: New Parts

RANK: Japan only

● Side Board Assembly R

	REF NO.	PART NO.	DESCRIPTION			REMARKS	QTY	RANK
			SIDE BOARD ASSEMBLY R	RIGHT		YDP-323		
		--	Side Board Assembly R	RIGHT		(WE91930)		
*	1	**WE920700**	Side Board R	RIGHT				
*	2	**WE923000**	Stand Base					
*	3	**WF514200**	Pan Head Tapping Screw-1	4.0X65 MFZN2W3			3	
	5	**VQ958300**	Holder, Back Board					05
	6	**VS295600**	Holder, Stand R	RIGHT				05
	7	**VN973100**	Angle Bracket, ST					04
	8	**V9703500**	Holder, PB					02
*	9	**WE955100**	Bind Head Tapping Screw-1	3.5X16 MFZN2B3			12	

*: New Parts

RANK: Japan only

■ END BLOCK ASSEMBLY L

● Top view ● Bottom view

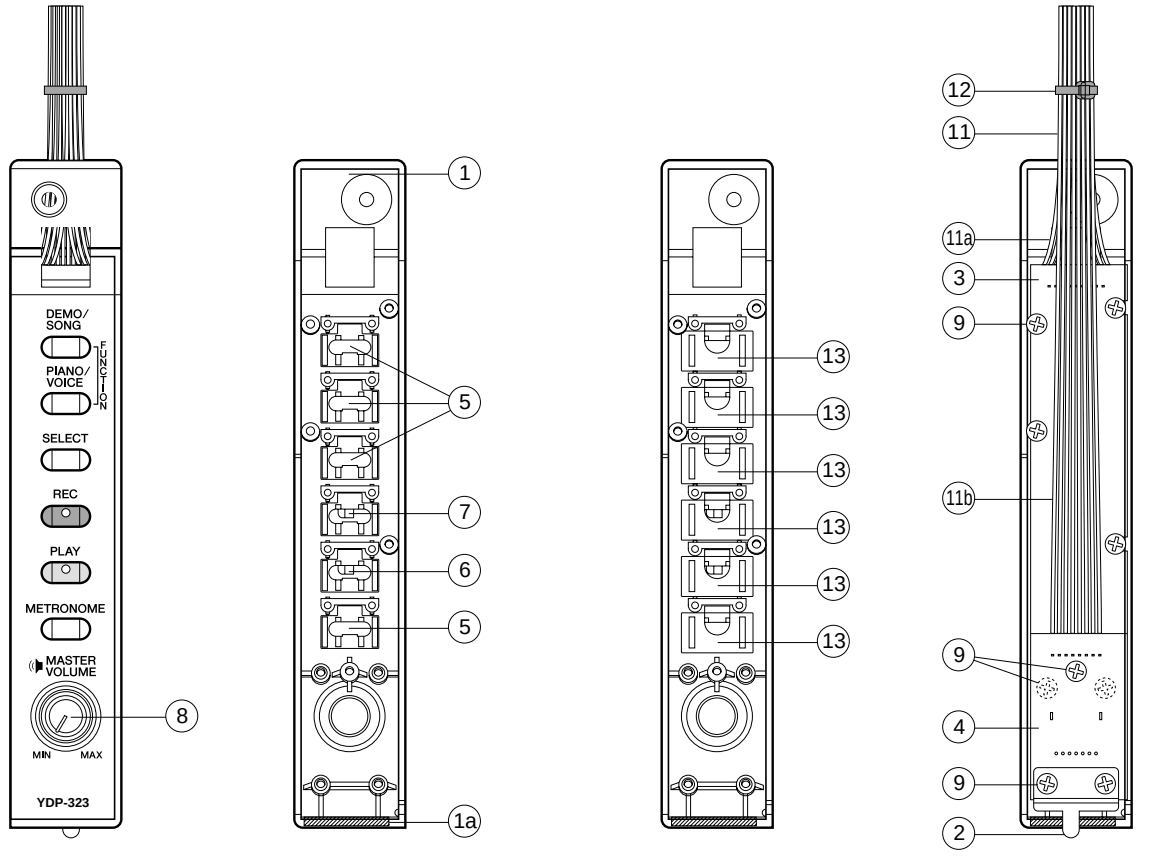

	REF NO.	PART NO.	DESCRIPTION			REMARKS	QTY	RANK
			END BLOCK ASSEMBLY L	LEFT		YDP-323		
		--	End Block Assembly L	LEFT		(WE90470)		
*	1	**WE905100**	End Block Sub Assembly L	LEFT				
	1a	--	Nonwoven Fabric Cloth	25X8X0.35		(V468640)		
	2	--	Angle, PL			(WE90570)		
*	3	**WE909600**	Circuit Board	PANEL				
*	4	**WE910200**	Circuit Board	MVR				
	5	**V8065100**	Button Dark Gray	(B) 1		DEMO/SONG, PIANO/VOICE, SELECT, METRONOME	4	04
	6	**V8670300**	Button Green	B LENS		PLAY		01
	7	**V8670200**	Button Red	B LENS		REC		01
	8	**V2300100**	Volume Knob			MASTER VOLUME		04
	9	**WE774300**	Bind Head Tapping Screw-B	3.0X8 MFZN2W3			9	01
	11	--	Cable Assembly	PANEL		(WE95360)		
	11a	--	Connector Assembly	PN PH-9P/PH-7P		(WE95340)		
	11b	--	Connector Assembly	MV PHR-8		(WE95350)		
	12	**CB069250**	Cord Holder	BK-1				01
	13	--	Nonwoven Fabric Cloth			(V926650)	6	

*: New Parts

RANK: Japan only

END BLOCK ASSEMBLY R

● **Side view**

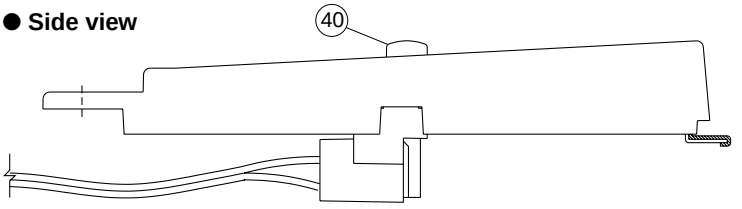

● **Power Switch Assembly**

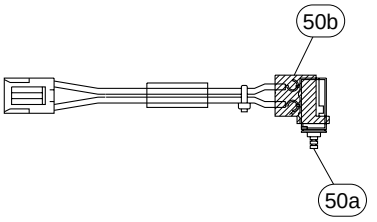

● **Bottom view**

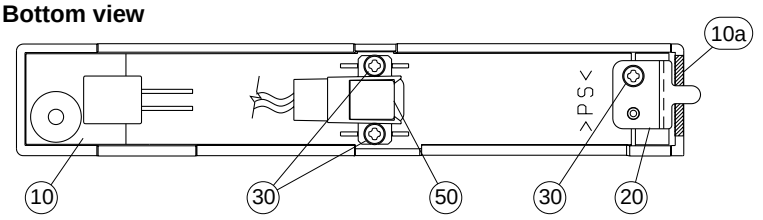

REF NO.	PART NO.	DESCRIPTION			REMARKS	QTY	RANK
		END BLOCK ASSEMBLY R	RIGHT		YDP-323		
	V8733300	End Block Assembly R	RIGHT				08
10	**V9361800**	End Block Sub Assembly R	RIGHT YMMA				03
10a	**--**	Nonwoven Fabric Cloth	25X8X0.35		(V468640)		
20	**--**	Angle P			(V861560)		
30	**WE774300**	Bind Head Tapping Screw-B	3.0X8 MFZN2W3			3	01
40	**VF663400**	Push Knob Black			POWER		02
⚠ 50	**VS353700**	Power Switch Assembly			POWER		08
⚠ 50a	**VC843500**	Push Switch	SDDLB1 J.U.C.S.VD		POWER		03
50b	**V5800800**	Switch Cover Ivory/Black					01

∗: New Parts RANK: Japan only

HEADPHONES JACK ASSEMBLY

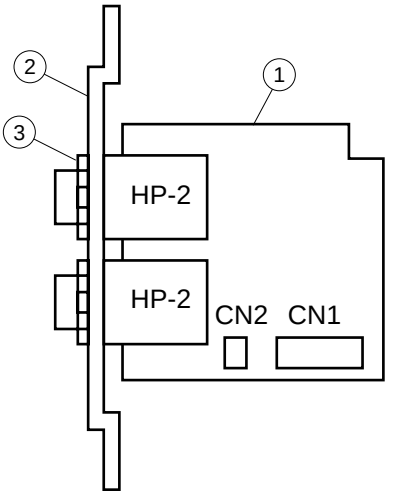

REF NO.	PART NO.	DESCRIPTION			REMARKS	QTY	RANK
		HEADPHONES JACK ASSEMBLY			YDP-323		
	--	Headphones Jack Assembly			(WC04600)		
1	**WC045900**	Circuit Board	HP				05
2	**VN631800**	Angle, Headphone					04
3	**WF559900**	Hexagonal Nut	12X14X2 P=1.0			2	01

∗: New Parts RANK: Japan only

D-JACK ASSEMBLY

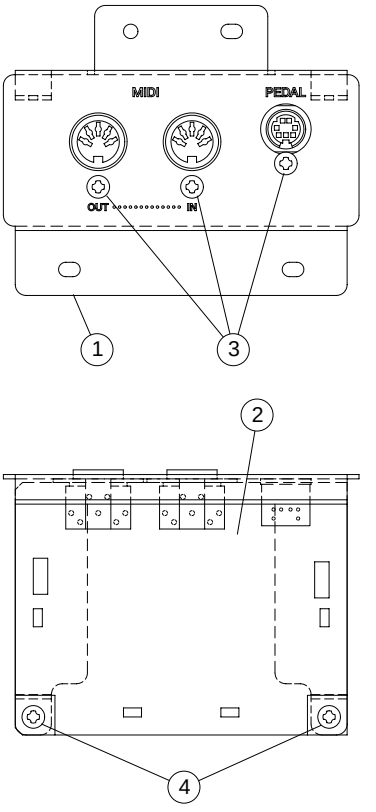

	REF NO.	PART NO.	DESCRIPTION			REMARKS	QTY	RANK
			D-JACK ASSEMBLY			YDP-323		
		--	D-JACK Assembly			(WE91680)		
	1	--	Angle, D-JACK			(WE91690)		
*	2	**WE910100**	Circuit Board	DJACK				
	3	**WE774400**	Bind Head Tapping Screw-B	3.0X8 MFZN2B3			3	01
	4	**WE774300**	Bind Head Tapping Screw-B	3.0X8 MFZN2W3			2	01

*: New Parts

RANK: Japan only

POWER SUPPLY UNIT

● **Top view**

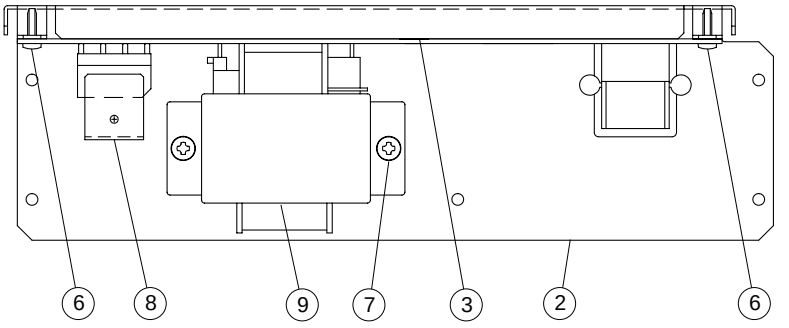

● **Front view**

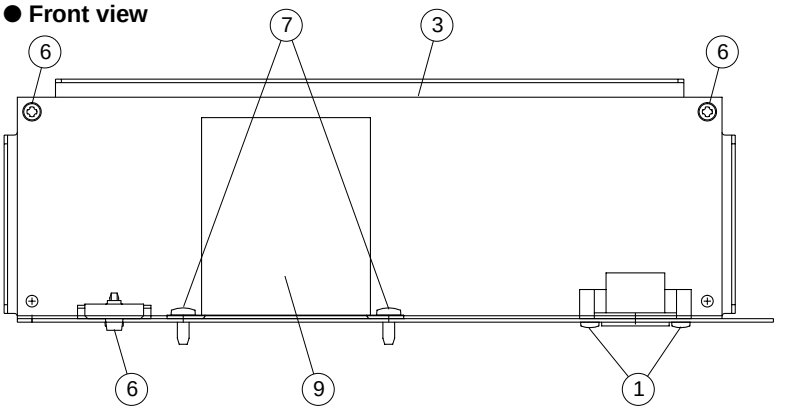

REF NO.	PART NO.	DESCRIPTION			REMARKS	QTY	RANK
		POWER SUPPLY UNIT			YDP-323		
	--	Power Supply Unit	U		U (WF16800)		
1	**WE972200**	Bind Head Tapping Screw-B	3.0X10 MFZN2B3			2	01
2	**VZ958800**	Plate, AC Inlet					07
3	**V0010800**	Circuit Board	PS		U		11
6	**WE987400**	Bind Head Tapping Screw-B	3.0X12 MFZN2W3			3	01
7	**WE972300**	Bind Head Tapping Screw-B	4.0X10 MFZN2B3			2	01
8	**VT461100**	Transistor Holder	A				03
⚠ 9	**X6318A00**	Power Transformer	J/UL1411/CSA C22.2		U		09
11	--	Nonwoven Fabric Cloth	34X14XT0.45		(WD49560)	2	

∗: New Parts

RANK: Japan only

PEDAL BOX ASSEMBLY

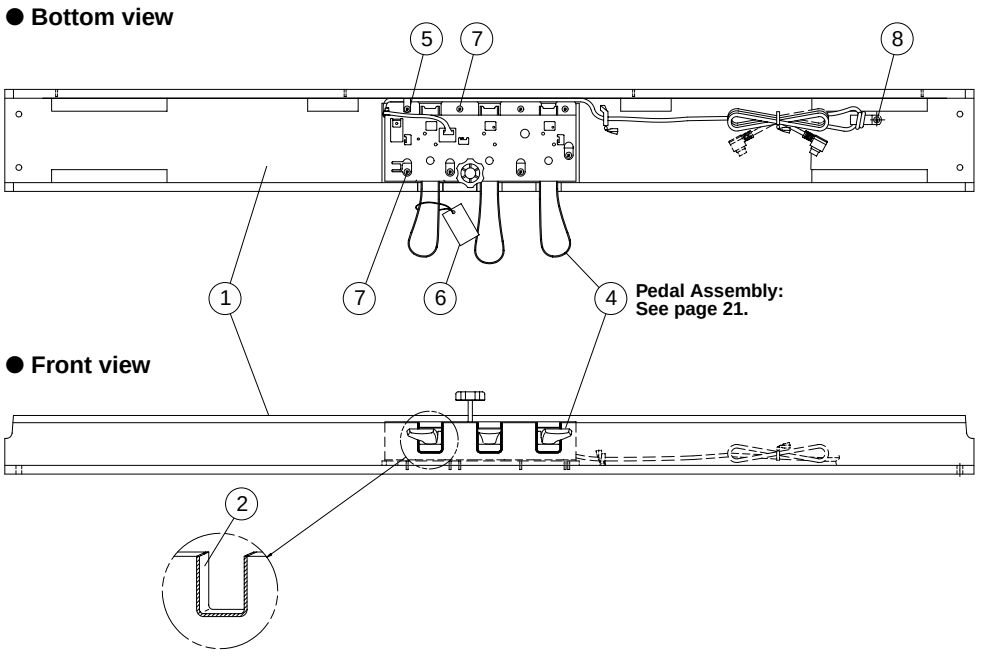

	REF NO.	PART NO.	DESCRIPTION			REMARKS	QTY	RANK
			PEDAL BOX ASSEMBLY			YDP-323		
		--	Pedal Box Assembly			(WE92480)		
*	1	**WE925400**	Pedal Box					
	2	**VU464300**	Felt Red	115X12X2			3	03
	4	**V0053700**	Pedal Assembly	(I)				18
	5	**CB065520**	Nylon Clamp	NK-3N				01
	6	**VD966100**	Caution Label	Clavinova				03
*	7	**WE971900**	Bind Head Tapping Screw-1	4.0X14 MFZN2W3			8	
*	8	**WF745900**	Truss Head Tapping Screw-1	4.0X12 MFZN2W3				

*: New Parts

RANK: Japan only

PEDAL ASSEMBLY

• Top view

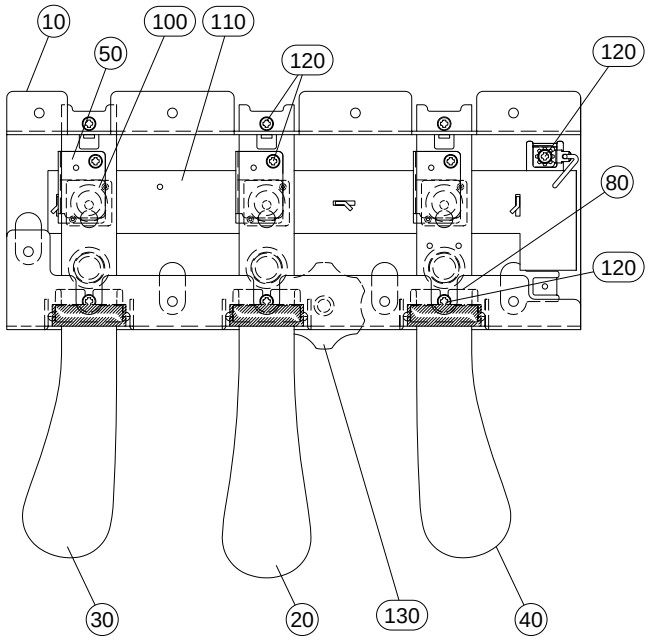

• Side view

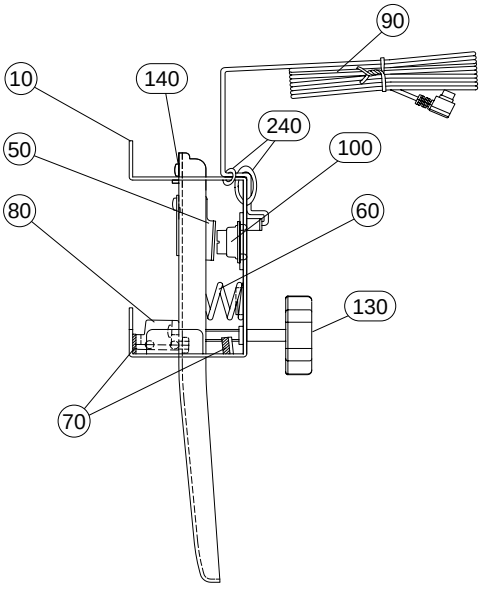

REF NO.	PART NO.	DESCRIPTION			REMARKS	QTY	RANK
		PEDAL ASSEMBLY	(I)		YDP-323		
	V0053700	Pedal Assembly	(I)				18
10	**VU339700**	Pedal Frame					09
20	**VU362000**	Pedal Piece C	CENTER		SOSTENUTO pedal		08
30	**VU362100**	Pedal Piece L	LEFT		SOFT pedal		08
40	**VU362200**	Pedal Piece R	RIGHT		DAMPER pedal		08
50	**VV433500**	Actuator	PEDAL			3	03
60	**VP348100**	Pedal Spring				3	03
70	**VU346500**	Felt Black	PA			6	03
80	**VU339800**	Shutter				3	03
90	**V0044700**	Connector Assembly	PK-LF				08
100	**VU456000**	Rubber Contact	PEDAL			3	03
110	**WB970200**	Circuit Board	PEDAL				05
120	**WE774400**	Bind Head Tapping Screw-B	3.0X8 MFZN2B3			10	01
* 130	**WF054500**	Screw	40XM6X46 MFZN2B3				
140	**TX920280**	Grease	G-31KA 50g		(VE96850)		10
240	**CB069250**	Cord Holder	BK-1			2	01

*: New Parts

RANK: Japan only

KEYBOARD ASSEMBLY

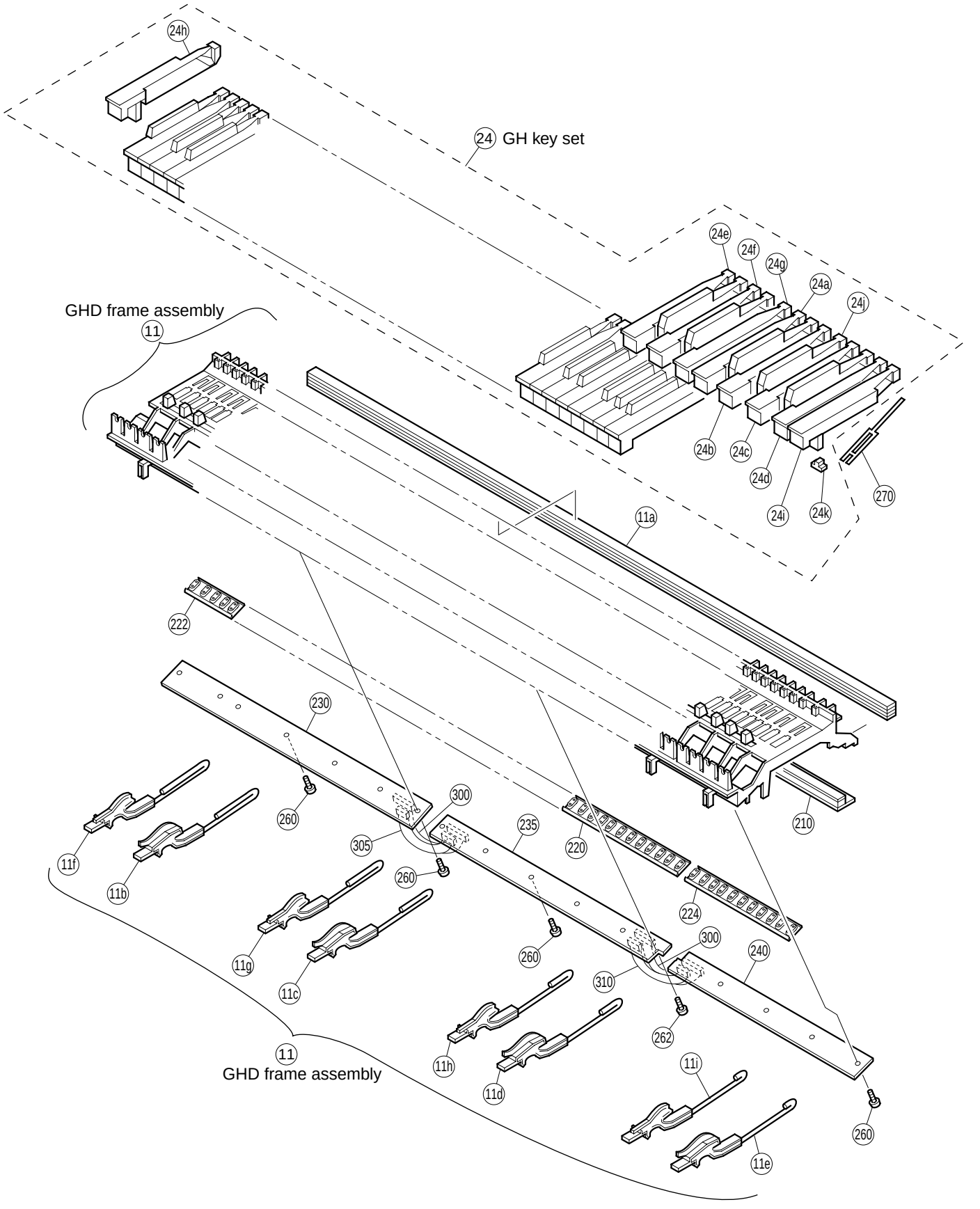

REF NO.	PART NO.	DESCRIPTION			REMARKS	QTY	RANK
		KEYBOARD ASSEMBLY	GHD_EBUS A88 K6		YDP-323		
	V8278500	Keyboard Assembly	GHD_EBUS A88 K6				51
11	**--**	Frame	A88		(WC96120)		
11a	**VU342100**	Stopper Felt	1229X12X14.8T U88				09
11b	**VY828500**	Hammer Assembly, White Key	W1 A-1-F1			13	05
11c	**VY828600**	Hammer Assembly, White Key	W2 G1-E3			13	05
11d	**VY828700**	Hammer Assembly, White Key	W3 F3-D5			13	05
11e	**VY828800**	Hammer Assembly, White Key	W4 E5-C7			13	05
11f	**VY828900**	Hammer Assembly, Black Key	B1 A#-1-F#1			9	05
11g	**VY829000**	Hammer Assembly, Black Key	B2 G#1-D#3			9	05
11h	**VY829100**	Hammer Assembly, Black Key	B3 F#3-C#5			9	05
11i	**VY829200**	Hammer Assembly, Black Key	B4 D#5-A#6			9	05
24	**--**	GH Key Set			(WC96140)		
24a	**VU101301**	White Key	F			7	05
24b	**VU101401**	White Key	G			7	05
24c	**VU101501**	White Key	A			7	05
24d	**VU101601**	White Key	B			8	05
24e	**VU101001**	White Key	C			7	05
24f	**VU101101**	White Key	D			7	05
24g	**VU101201**	White Key	E			7	05
24h	**VU101701**	White Key	A'				05
24i	**VU101801**	White Key	C'				05
24j	**VU102101**	Black Key				36	05
24k	**V2211300**	Rubber 2	GH,GHD,HE			88	03
24l	**--**	Grease	PG-661		(VU34200)		
210	**V7640100**	Stopper Felt	1239.5X28X10.1TL88				07
220	**VY846700**	Rubber Contact	OCTAVE 12KEYS D-C#		D0-C#1,D1-C#2,D2-C#3, D3-C#4,D4-C#5,D5-C#6	6	08
222	**VY846800**	Rubber Contact	OCTAVE 5KEYS A-C#		A-1-C#0		08
224	**VY846900**	Rubber Contact	OCTAVE 11KEYS D-C		D6-C7		08
230	**V8514800**	Circuit Board	GHD EBUS L				13
235	**V8521400**	Circuit Board	GHD M				08
240	**V8521500**	Circuit Board	GHD H				08
260	**VT413400**	Bind Head Tapping Screw-P	3.0X10 MFZN2			16	01
* 260	**WF001000**	Bind Head Tapping Screw-P	3.0X10 MFZN2W3			16	
* 262	**WF765500**	PW Head Tapping Screw-P	3.0X10-10 MFZN2W3				
270	**V2798500**	Spring	R WHITE/BLACK			88	
291	**--**	Grease	G-1006Y		(V627430)		
296	**--**	Grease	PG-661		(2341590)		
300	**V8520500**	Cable	12P L=106 P=2			2	01
305	**V7766800**	Cable	9P L=106 P=2				01
310	**V8521000**	Cable	4P L=106 P=2				01
		TOOL					
	TX000670	Rod					99

*: New Parts

RANK: Japan only

BENCH (BC-100DR)

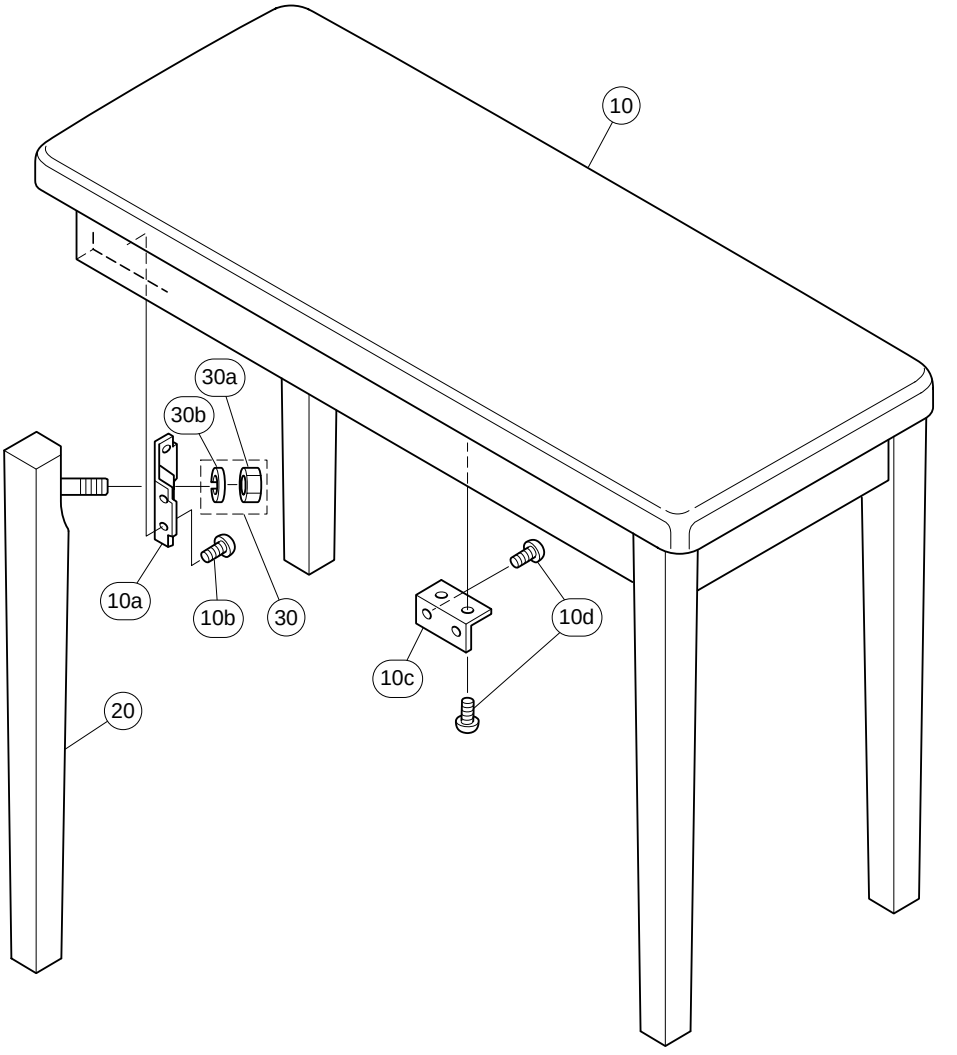

	REF NO.	PART NO.	DESCRIPTION			REMARKS	QTY	RANK
			BENCH	BC-100DR		YDP-323		
		V5531400	Bench	BC-100DR				20
	A	**--**	Bench	BC-100DR		(V553200)		
	10	**V5532900**	Bench Board Assembly	DR				16
	10a	**AA016480**	Holder, Leg				4	02
*	10b	**WE970700**	Bind Head Tapping Screw-1	3.5X16 MFZN2W3			16	
	10c	**VC969300**	Holder, Bench Board				4	03
	10d	**EP030170**	Bind Head Tapping Screw-1	3.5X14 MFZN2Y			16	01
	20	**V8176300**	Leg Assembly	DR			4	08
	30	**VS530500**	Screw Set					03
*	30a	**WF742600**	Hexagonal Nut	M10 #1			4	
*	30b	**WF577600**	Spring Washer	10.0 MFZN2W3			4	
			ACCESSORY					
		--	Wrench			(V688680)		

*: New Parts

RANK: Japan only

■ ELECTRICAL PARTS

	REF NO.	PART NO.	DESCRIPTION			REMARKS	QTY	RANK
			ELECTRICAL PARTS			YDP-323		
*		**WE910100**	Circuit Board	DJACK		(WE70680)(X6372C0)		
*		**WE909700**	Circuit Board	DM		(WE78630)(X5830D0)		
		V8514800	Circuit Board	GHD EBUS L		(XZ138D0)		13
		V6588200	Circuit Board	MK SUB		(V658810)(XZ142B0)		10
		V8521500	Circuit Board	GHD H		(X2218A0)		08
		V8521400	Circuit Board	GHD M		(X2217A0)		08
		WC045900	Circuit Board	HP		(WC04580)(XQ389A0,XQ390A0)		05
*		**WE745000**	Circuit Board	MAEQ		(X6391C0)		
*		**WE910200**	Circuit Board	MVR		(WE70440)(X6371C0)		
*		**WE909600**	Circuit Board	PANEL		(WE70440)(X6371C0)		
		WB970200	Circuit Board	PEDAL		(WB97010)(XR780C0)		05
		VN637600	Circuit Board	PL		(VN63740)(XL151B0)		03
		VU659100	Circuit Board	PL		(VU65900)(XR898A0)		03
		V0010800	Circuit Board	PS		U (V001140)(XU372E0/F0)		11
*		**WE910100**	Circuit Board	DJACK		(WE70680)(X6372C0)		
		--	Jumper Wire	0.55		(VA07890)		
	C0001	**UR827220**	Electrolytic Cap.	22.00 10.0V RX TP				01
	C0002	**FG644100**	Ceramic Capacitor-F	0.0100 50V Z RX TP				01
	C0004	**FG644100**	Ceramic Capacitor-F	0.0100 50V Z RX TP				01
	C0005	**FG612100**	Ceramic Cap.-B	100P 50V K RX TP				01
	C0006	**FG644100**	Ceramic Capacitor-F	0.0100 50V Z RX TP				01
	C0007	**FG612100**	Ceramic Cap.-B	100P 50V K RX TP				01
	C0008	**FG612100**	Ceramic Cap.-B	100P 50V K RX TP				01
	CN001	**VB390100**	Connector Base Post	PH 5P TE				01
	CN002	**VB390100**	Connector Base Post	PH 5P TE				01
	D0001	**VD631600**	Diode	1SS133,176,HSS104				01
	-0007	**VD631600**	Diode	1SS133,176,HSS104				01
	IC001	**VD473200**	Photo Coupler	6N137-000E				05
	J0001	**--**	Jumper Wire	0.55		(VA07890)		
	JK001	**VT202500**	DIN Connector	5P YKF51-50		MIDI IN		01
	JK002	**VT202500**	DIN Connector	5P YKF51-50		MIDI OUT		01
	JK003	**V4874800**	DIN Connector	MD-S6130-90		PEDAL		02
	L0001	**VB835000**	Coil	FL5R200QNT 20uH				01
	-0009	**VB835000**	Coil	FL5R200QNT 20uH				01
	R0001	**HF457220**	Carbon Resistor	22.0K 1/4 J AX TP				01
	R0002	**HF457220**	Carbon Resistor	22.0K 1/4 J AX TP				01
	R0003	**HF457100**	Carbon Resistor	10.0K 1/4 J AX TP				01
	R0004	**HF456100**	Carbon Resistor	1.0K 1/4 J AX TP				01
	R0005	**HF456150**	Carbon Resistor	1.5K 1/4 J AX TP				01
	R0006	**HF455220**	Carbon Resistor	220.0 1/4 J AX TP				01
	-0008	**HF455220**	Carbon Resistor	220.0 1/4 J AX TP				01
	TR001	**IC174070**	Transistor	2SC1740S R,S				01
	TR002	**IC174070**	Transistor	2SC1740S R,S				01
*		**WE909700**	Circuit Board	DM		(WE78630)(X5830D0)		
	C0001	**US064100**	Ceramic Capacitor-B (chip)	0.0100 50V K RECT.				01
	-0003	**US064100**	Ceramic Capacitor-B (chip)	0.0100 50V K RECT.				01
	C0004	**US062100**	Ceramic Capacitor-SL(chip)	100P 50V J RECT.				01
	C0005	**US064100**	Ceramic Capacitor-B (chip)	0.0100 50V K RECT.				01
	C0006	**US062100**	Ceramic Capacitor-SL(chip)	100P 50V J RECT.				01
	-0010	**US062100**	Ceramic Capacitor-SL(chip)	100P 50V J RECT.				01
	C0012	**UF128470**	Electrolytic Cap. (chip)	470 10V UUR1A4				02
	C0014	**US065100**	Ceramic Capacitor-F (chip)	0.100 50V Z RECT.				
	C0014	**US135100**	Ceramic Capacitor-F (chip)	0.1000 16V Z RECT.				01
	C0014	**US145100**	Ceramic Capacitor-F (chip)	0.1000 25V Z RECT.				01
	C0016	**US064100**	Ceramic Capacitor-B (chip)	0.0100 50V K RECT.				01
	C0020	**US062470**	Ceramic Capacitor-SL(chip)	470P 50V J RECT.				01
	C0021	**US064100**	Ceramic Capacitor-B (chip)	0.0100 50V K RECT.				01
	-0024	**US064100**	Ceramic Capacitor-B (chip)	0.0100 50V K RECT.				01
	C0025	**UF017220**	Electrolytic Cap. (chip)	22 6.3V				01
	C0026	**US065100**	Ceramic Capacitor-F (chip)	0.100 50V Z RECT.				
	C0026	**US135100**	Ceramic Capacitor-F (chip)	0.1000 16V Z RECT.				01
	C0026	**US145100**	Ceramic Capacitor-F (chip)	0.1000 25V Z RECT.				01
	C0027	**UF017220**	Electrolytic Cap. (chip)	22 6.3V				01
	C0028	**US064100**	Ceramic Capacitor-B (chip)	0.0100 50V K RECT.				01
	-0030	**US064100**	Ceramic Capacitor-B (chip)	0.0100 50V K RECT.				01
	C0034	**US064100**	Ceramic Capacitor-B (chip)	0.0100 50V K RECT.				01
	C0042	**US064100**	Ceramic Capacitor-B (chip)	0.0100 50V K RECT.				01

*: New Parts

RANK: Japan only

REF NO.	PART NO.	DESCRIPTION			REMARKS	QTY	RANK
C0046	**US065100**	Ceramic Capacitor-F (chip)	0.100 50V Z RECT.				
C0046	**US135100**	Ceramic Capacitor-F (chip)	0.1000 16V Z RECT.				01
C0046	**US145100**	Ceramic Capacitor-F (chip)	0.1000 25V Z RECT.				01
C0048	**UF018100**	Electrolytic Cap. (chip)	100 6.3V				01
C0051	**US065100**	Ceramic Capacitor-F (chip)	0.100 50V Z RECT.				
C0051	**US135100**	Ceramic Capacitor-F (chip)	0.1000 16V Z RECT.				01
C0051	**US145100**	Ceramic Capacitor-F (chip)	0.1000 25V Z RECT.				01
C0052	**UF017470**	Electrolytic Cap. (chip)	47 6.3V				01
C0053	**UF017220**	Electrolytic Cap. (chip)	22 6.3V				01
C0054	**US064100**	Ceramic Capacitor-B (chip)	0.0100 50V K RECT.				01
-0056	**US064100**	Ceramic Capacitor-B (chip)	0.0100 50V K RECT.				01
C0057	**UF017220**	Electrolytic Cap. (chip)	22 6.3V				01
C0059	**US064100**	Ceramic Capacitor-B (chip)	0.0100 50V K RECT.				01
-0061	**US064100**	Ceramic Capacitor-B (chip)	0.0100 50V K RECT.				01
C0062	**UF017220**	Electrolytic Cap. (chip)	22 6.3V				01
C0063	**UF017220**	Electrolytic Cap. (chip)	22 6.3V				01
C0064	**US064100**	Ceramic Capacitor-B (chip)	0.0100 50V K RECT.				01
C0065	**US065100**	Ceramic Capacitor-F (chip)	0.100 50V Z RECT.				
C0065	**US135100**	Ceramic Capacitor-F (chip)	0.1000 16V Z RECT.				01
C0065	**US145100**	Ceramic Capacitor-F (chip)	0.1000 25V Z RECT.				01
C0066	**UF017220**	Electrolytic Cap. (chip)	22 6.3V				01
C0067	**US064100**	Ceramic Capacitor-B (chip)	0.0100 50V K RECT.				01
-0070	**US064100**	Ceramic Capacitor-B (chip)	0.0100 50V K RECT.				01
C0072	**US064100**	Ceramic Capacitor-B (chip)	0.0100 50V K RECT.				01
-0075	**US064100**	Ceramic Capacitor-B (chip)	0.0100 50V K RECT.				01
C0076	**UF037470**	Electrolytic Cap. (chip)	47 16V				01
C0078	**US065100**	Ceramic Capacitor-F (chip)	0.100 50V Z RECT.				
C0078	**US135100**	Ceramic Capacitor-F (chip)	0.1000 16V Z RECT.				01
C0078	**US145100**	Ceramic Capacitor-F (chip)	0.1000 25V Z RECT.				01
C0082	**UF017220**	Electrolytic Cap. (chip)	22 6.3V				01
C0083	**US064100**	Ceramic Capacitor-B (chip)	0.0100 50V K RECT.				01
C0084	**UF017220**	Electrolytic Cap. (chip)	22 6.3V				01
C0085	**US064100**	Ceramic Capacitor-B (chip)	0.0100 50V K RECT.				01
C0086	**US064100**	Ceramic Capacitor-B (chip)	0.0100 50V K RECT.				01
C0087	**US063150**	Ceramic Capacitor-B (chip)	1500P 50V K RECT.				01
C0088	**US063150**	Ceramic Capacitor-B (chip)	1500P 50V K RECT.				01
C0093	**US064100**	Ceramic Capacitor-B (chip)	0.0100 50V K RECT.				01
C0094	**US062470**	Ceramic Capacitor-SL(chip)	470P 50V J RECT.				01
C0095	**US062470**	Ceramic Capacitor-SL(chip)	470P 50V J RECT.				01
C0096	**UF037100**	Electrolytic Cap. (chip)	10 16V				01
C0097	**UF037220**	Electrolytic Cap. (chip)	22 16V				01
C0099	**US064100**	Ceramic Capacitor-B (chip)	0.0100 50V K RECT.				01
-0105	**US064100**	Ceramic Capacitor-B (chip)	0.0100 50V K RECT.				01
C0108	**US064100**	Ceramic Capacitor-B (chip)	0.0100 50V K RECT.				01
C0109	**US064100**	Ceramic Capacitor-B (chip)	0.0100 50V K RECT.				01
C0115	**UF017220**	Electrolytic Cap. (chip)	22 6.3V				01
C0116	**US064100**	Ceramic Capacitor-B (chip)	0.0100 50V K RECT.				01
C0117	**US065100**	Ceramic Capacitor-F (chip)	0.100 50V Z RECT.				
C0117	**US135100**	Ceramic Capacitor-F (chip)	0.1000 16V Z RECT.				01
C0117	**US145100**	Ceramic Capacitor-F (chip)	0.1000 25V Z RECT.				01
C0131	**UF037470**	Electrolytic Cap. (chip)	47 16V				01
C0138	**US064100**	Ceramic Capacitor-B (chip)	0.0100 50V K RECT.				01
C0140	**US064100**	Ceramic Capacitor-B (chip)	0.0100 50V K RECT.				01
C0144	**US062470**	Ceramic Capacitor-SL(chip)	470P 50V J RECT.				01
C0145	**US062470**	Ceramic Capacitor-SL(chip)	470P 50V J RECT.				01
C0149	**US064100**	Ceramic Capacitor-B (chip)	0.0100 50V K RECT.				01
C0152	**US064100**	Ceramic Capacitor-B (chip)	0.0100 50V K RECT.				01
C0300	**US065100**	Ceramic Capacitor-F (chip)	0.100 50V Z RECT.				
-0316	**US065100**	Ceramic Capacitor-F (chip)	0.100 50V Z RECT.				
C0300	**US135100**	Ceramic Capacitor-F (chip)	0.1000 16V Z RECT.				01
-0316	**US135100**	Ceramic Capacitor-F (chip)	0.1000 16V Z RECT.				01
C0300	**US145100**	Ceramic Capacitor-F (chip)	0.1000 25V Z RECT.				01
-0316	**US145100**	Ceramic Capacitor-F (chip)	0.1000 25V Z RECT.				01
C0317	**US064100**	Ceramic Capacitor-B (chip)	0.0100 50V K RECT.				01
-0320	**US064100**	Ceramic Capacitor-B (chip)	0.0100 50V K RECT.				01
C0321	**US062100**	Ceramic Capacitor-SL(chip)	100P 50V J RECT.				01
-0323	**US062100**	Ceramic Capacitor-SL(chip)	100P 50V J RECT.				01
CN001	**VT388500**	Base Post Connector	PH 4P TE				01
CN002	**VT388600**	Base Post Connector	PH 5P TE				01
CN003	**VT388600**	Base Post Connector	PH 5P TE				01

∗: New Parts

RANK: Japan only

	REF NO.	PART NO.	DESCRIPTION			REMARKS	QTY	RANK
	CN004	**VT388800**	Base Post Connector	PH 7P TE				
	CN005	**VT389000**	Base Post Connector	PH 9P TE				01
	CN007	**VT389200**	Base Post Connector	PH 11P TE				01
	CN010	**VT388800**	Base Post Connector	PH 7P TE				
	D0001	**VN681100**	Diode	EC10DS4TE12L1A400V				01
	-0003	**VN681100**	Diode	EC10DS4TE12L1A400V				01
	D0001	**VS201100**	Diode	D1F60 1A 600V TP				01
	-0003	**VS201100**	Diode	D1F60 1A 600V TP				01
	EM001	**WE056200**	EMI Filter (chip)	NFM21PC105B1A3D				01
	EM002	**WE056200**	EMI Filter (chip)	NFM21PC105B1A3D				01
	IC001	**X3847A00**	IC	S-80142ANMC-JC3T2G		SYSTEM RESET		01
	IC002	**X3833A00**	IC	SN74AHC1G08DCKR		AND		01
	IC002	**XP116A00**	IC	TC7S08FU				01
	IC004	**X6055A00**	IC	YMW767-VTZ		CPU		10
	IC005	**X5914A00**	IC	UPC37M32TJ-E1-AZ		REGULATOR +3.3V/+2.5V		03
	IC006	**XP004A00**	IC	TC7W04FU		INVERTER		02
	IC007	**X6055A00**	IC	YMW767-VTZ		CPU		10
*	IC008	**X6640100**	IC	MBM29PL64LM90PCN-K		MASK ROM 64M PROG./WAVE1		
	IC010	**XS534A00**	IC	NJM78M05DL1A		REGULATOR +5V		02
	IC011	**X6040A00**	IC	AK4385ET		DAC		03
	IC014	**X3505A00**	IC	NJM2068M-D(TE2)		OP AMP		02
	IC014	**XF291A00**	IC	UPC4570G2-T1-A				03
	IC015	**X2310A00**	IC	MX29LV400BTC-70G F		FLASH ROM 4M		06
	IC015	**X4490A00**	IC	MBM29LV400BC-70PFT				08
*	IC016	**X6641100**	IC	MBM29PL64LM90PCN-K		MASK ROM 64M PROG./WAVE2		
	IC018	**X5647A00**	IC	SN74LV32APWR		OR		01
	IC021	**X2726A00**	IC	GLT440L16-40TC		DRAM 4M		05
*	IC021	**X6504A00**	IC	M11L416256SA-35TG				
	IC024	**X6008100**	IC	HD6433690FYV		CPU		06
	IC029	**X3865A00**	IC	SN74LV126APWR		BUS BUFFER		
	L0001	**VY657200**	Chip Inductance	600 BK1608HM601				01
	-0004	**VY657200**	Chip Inductance	600 BK1608HM601				01
	L0007	**V8901200**	Chip Solid Inductance	BLM21PG221SN1D				01
	L0012	**V2747000**	Chip Inductance	BLM18PG600SN1				
	-0014	**V2747000**	Chip Inductance	BLM18PG600SN1				
	R0001	**RD357100**	Carbon Resistor (chip)	10.0K 63M J RECT.				01
	R0002	**RD350000**	Carbon Resistor (chip)	0 63M J RECT.				01
	-0004	**RD350000**	Carbon Resistor (chip)	0 63M J RECT.				01
	R0008	**RD357100**	Carbon Resistor (chip)	10.0K 63M J RECT.				01
	R0009	**RD357470**	Carbon Resistor (chip)	47.0K 63M J RECT.				01
	R0012	**RD357100**	Carbon Resistor (chip)	10.0K 63M J RECT.				01
	R0014	**RD357100**	Carbon Resistor (chip)	10.0K 63M J RECT.				01
	R0015	**RD354470**	Carbon Resistor (chip)	47.0 63M J RECT.				01
	R0016	**RD357100**	Carbon Resistor (chip)	10.0K 63M J RECT.				01
	R0017	**RD354330**	Carbon Resistor (chip)	33.0 63M J RECT.				01
	R0018	**RD354330**	Carbon Resistor (chip)	33.0 63M J RECT.				01
	R0019	**RD354470**	Carbon Resistor (chip)	47.0 63M J RECT.				01
	-0026	**RD354470**	Carbon Resistor (chip)	47.0 63M J RECT.				01
	R0027	**RD350000**	Carbon Resistor (chip)	0 63M J RECT.				01
	-0030	**RD350000**	Carbon Resistor (chip)	0 63M J RECT.				01
	R0031	**RD357100**	Carbon Resistor (chip)	10.0K 63M J RECT.				01
	R0033	**RD357470**	Carbon Resistor (chip)	47.0K 63M J RECT.				01
	R0035	**RD357470**	Carbon Resistor (chip)	47.0K 63M J RECT.				01
	R0038	**RD354470**	Carbon Resistor (chip)	47.0 63M J RECT.				01
	-0045	**RD354470**	Carbon Resistor (chip)	47.0 63M J RECT.				01
	R0046	**RD357220**	Carbon Resistor (chip)	22.0K 63M J RECT.				01
	R0047	**RD357220**	Carbon Resistor (chip)	22.0K 63M J RECT.				01
	R0048	**RD354470**	Carbon Resistor (chip)	47.0 63M J RECT.				01
	-0051	**RD354470**	Carbon Resistor (chip)	47.0 63M J RECT.				01
	R0053	**RD354470**	Carbon Resistor (chip)	47.0 63M J RECT.				01
	-0062	**RD354470**	Carbon Resistor (chip)	47.0 63M J RECT.				01
	R0063	**RD357470**	Carbon Resistor (chip)	47.0K 63M J RECT.				01
	R0064	**RD350000**	Carbon Resistor (chip)	0 63M J RECT.				01
	-0067	**RD350000**	Carbon Resistor (chip)	0 63M J RECT.				01
	R0068	**RD357100**	Carbon Resistor (chip)	10.0K 63M J RECT.				01
	R0069	**RD354470**	Carbon Resistor (chip)	47.0 63M J RECT.				01
	-0072	**RD354470**	Carbon Resistor (chip)	47.0 63M J RECT.				01
	R0076	**RD354470**	Carbon Resistor (chip)	47.0 63M J RECT.				01
	-0079	**RD354470**	Carbon Resistor (chip)	47.0 63M J RECT.				01
	R0081	**RD350000**	Carbon Resistor (chip)	0 63M J RECT.				01

*: New Parts

RANK: Japan only

REF NO.	PART NO.	DESCRIPTION			REMARKS	QTY	RANK
R0082	**RD356220**	Carbon Resistor (chip)	2.2K 63M J RECT.				01
R0083	**RD356220**	Carbon Resistor (chip)	2.2K 63M J RECT.				01
R0084	**RD354470**	Carbon Resistor (chip)	47.0 63M J RECT.				01
R0085	**RD356330**	Carbon Resistor (chip)	3.3K 63M J RECT.				01
-0088	**RD356330**	Carbon Resistor (chip)	3.3K 63M J RECT.				01
R0089	**RD354470**	Carbon Resistor (chip)	47.0 63M J RECT.				01
R0092	**RD356470**	Carbon Resistor (chip)	4.7K 63M J RECT.				01
R0093	**RD356470**	Carbon Resistor (chip)	4.7K 63M J RECT.				01
R0094	**RD354470**	Carbon Resistor (chip)	47.0 63M J RECT.				01
R0095	**RD354470**	Carbon Resistor (chip)	47.0 63M J RECT.				01
R0096	**RD357470**	Carbon Resistor (chip)	47.0K 63M J RECT.				01
R0097	**RD357100**	Carbon Resistor (chip)	10.0K 63M J RECT.				01
R0098	**RD354470**	Carbon Resistor (chip)	47.0 63M J RECT.				01
R0099	**RD350000**	Carbon Resistor (chip)	0 63M J RECT.				01
R0101	**RD354470**	Carbon Resistor (chip)	47.0 63M J RECT.				01
R0102	**RD357100**	Carbon Resistor (chip)	10.0K 63M J RECT.				01
R0103	**RD357100**	Carbon Resistor (chip)	10.0K 63M J RECT.				01
R0108	**RD357100**	Carbon Resistor (chip)	10.0K 63M J RECT.				01
-0110	**RD357100**	Carbon Resistor (chip)	10.0K 63M J RECT.				01
R0117	**RD357100**	Carbon Resistor (chip)	10.0K 63M J RECT.				01
R0120	**RD357100**	Carbon Resistor (chip)	10.0K 63M J RECT.				01
R0123	**RD356100**	Carbon Resistor (chip)	1.0K 63M J RECT.				01
R0124	**RD357100**	Carbon Resistor (chip)	10.0K 63M J RECT.				01
R0125	**RD356100**	Carbon Resistor (chip)	1.0K 63M J RECT.				01
R0126	**RD357100**	Carbon Resistor (chip)	10.0K 63M J RECT.				01
R0127	**RD357470**	Carbon Resistor (chip)	47.0K 63M J RECT.				01
R0128	**RD357470**	Carbon Resistor (chip)	47.0K 63M J RECT.				01
R0131	**RD354470**	Carbon Resistor (chip)	47.0 63M J RECT.				01
R0132	**RD354470**	Carbon Resistor (chip)	47.0 63M J RECT.				01
R0136	**RD356220**	Carbon Resistor (chip)	2.2K 63M J RECT.				01
R0137	**RD356220**	Carbon Resistor (chip)	2.2K 63M J RECT.				01
R0138	**RD356330**	Carbon Resistor (chip)	3.3K 63M J RECT.				01
-0141	**RD356330**	Carbon Resistor (chip)	3.3K 63M J RECT.				01
R0149	**RD354470**	Carbon Resistor (chip)	47.0 63M J RECT.				01
-0151	**RD354470**	Carbon Resistor (chip)	47.0 63M J RECT.				01
R0154	**RD354470**	Carbon Resistor (chip)	47.0 63M J RECT.				01
R0156	**RD354470**	Carbon Resistor (chip)	47.0 63M J RECT.				01
R0161	**RD356560**	Carbon Resistor (chip)	5.6K 63M J RECT.				01
R0162	**RD356390**	Carbon Resistor (chip)	3.9K 63M J RECT.				01
R0163	**RD357100**	Carbon Resistor (chip)	10.0K 63M J RECT.				01
R0164	**RD350000**	Carbon Resistor (chip)	0 63M J RECT.				01
R0165	**RD357470**	Carbon Resistor (chip)	47.0K 63M J RECT.				01
-0168	**RD357470**	Carbon Resistor (chip)	47.0K 63M J RECT.				01
RA001	**RE047470**	Resistor Array	47KX4				01
-003	**RE047470**	Resistor Array	47KX4				01
RA004	**RE047220**	Resistor Array	22KX4				01
RA005	**RE044470**	Resistor Array	47X4				01
-026	**RE044470**	Resistor Array	47X4				01
TA001	**WC668500**	Digital Transistor	UMG5N				
TR005	**VY677600**	Digital Transistor	DTC123JKA TP				01
X0001	**WE018900**	Quartz Crystal Unit	33.8688MHzDSO751SV				05
X0002	**V9864200**	Ceramic Resonator	10.0M CSTCE10M0G52				01
	V8514800	Circuit Board	GHD EBUS L		(XZ138D0)		13
	V6588200	Circuit Board	MK SUB		(XZ142B0)		10
	--	Nonwoven Fabric Cloth			(VU45960)		
C1	**UI527470**	Electrolytic Cap.	47.00 10.0V				01
C2	**VF611200**	Monolithic Ceramic Cap.	0.100 50V Z RX TP				02
CN1	**VB390300**	Connector Base Post	PH 7P TE				01
CN2	**VK025300**	Wire Trap	52147 9P TE				01
CN3	**VK025600**	Wire Trap	52147 12P TE				01
D1	**VB941200**	Diode	1SS133,1SS176 TE-				01
-69	**VB941200**	Diode	1SS133,1SS176 TE-				01
J	**--**	Jumper Wire	0.55		(VA07890)		
J7	**--**	Jumper Wire	0.55		(VA07890)		
	V6588200	Circuit Board	MK SUB		(V658810)(XZ142B0)		10
C0001	**US135100**	Ceramic Capacitor-F (chip)	0.1000 16V Z RECT.				01
-0004	**US135100**	Ceramic Capacitor-F (chip)	0.1000 16V Z RECT.				01
C0005	**US063100**	Ceramic Capacitor-B (chip)	1000P 50V K RECT.				01

∗: New Parts

RANK: Japan only

REF NO.	PART NO.	DESCRIPTION			REMARKS	QTY	RANK
CN001	**V6954300**	Connector	12P PFA105-122A01				03
CN003	**V6954400**	Connector	24P PFA105-242A01				03
IC001	**X0031200**	IC	UPD780031AYGK-NO4		LKS		05
L0001	**VR243700**	Chip Inductance	56U LEM2520 T 560J				01
R0001	**RD357100**	Carbon Resistor (chip)	10.0K 63M J RECT.				01
R0005	**RD356100**	Carbon Resistor (chip)	1.0K 63M J RECT.				01
R0006	**RD354470**	Carbon Resistor (chip)	47.0 63M J RECT.				01
-0008	**RD354470**	Carbon Resistor (chip)	47.0 63M J RECT.				01
RA001	**RE047100**	Resistor Array	10KX4				01
-004	**RE047100**	Resistor Array	10KX4				01
X0001	**V6150500**	Ceramic Resonator	8.38MHz EFOS8384E5				01
	V8521500	Circuit Board	GHD H		(X2218A0)		08
	--	Nonwoven Fabric Cloth			(V852160)		
CN1	**VK025600**	Wire Trap	52147 12P TE				01
CN3	**VK024800**	Wire Trap	52147 4P TE				01
D61	**VB941200**	Diode	1SS133,1SS176 TE-				01
-108	**VB941200**	Diode	1SS133,1SS176 TE-				01
J	**--**	Jumper Wire	0.55		(VA07890)		
	V8521400	Circuit Board	GHD M		(X2217A0)		08
	--	Nonwoven Fabric Cloth			(V846990)		
CN1	**VK025600**	Wire Trap	52147 12P TE				01
CN2	**VK025600**	Wire Trap	52147 12P TE				01
CN3	**VK025300**	Wire Trap	52147 9P TE				01
CN4	**VK024800**	Wire Trap	52147 4P TE				01
D1	**VB941200**	Diode	1SS133,1SS176 TE-				01
-60	**VB941200**	Diode	1SS133,1SS176 TE-				01
J	**--**	Jumper Wire	0.55		(VA07890)		
	WC045900	Circuit Board	HP		(WC04580)(XQ389A0,XQ390A0)		05
C0001	**FG414100**	Ceramic Capacitor-B	0.01UF 50V K				
-0005	**FG414100**	Ceramic Capacitor-B	0.01UF 50V K				
C0001	**FG644100**	Ceramic Capacitor-F	0.0100 50V Z RX TP				01
-0005	**FG644100**	Ceramic Capacitor-F	0.0100 50V Z RX TP				01
C0006	**--**	Jumper Wire	0.55		(VD04170)		
C0007	**--**	Jumper Wire	0.55		(VD04170)		
CN001	**VB858600**	Connector Base Post	PH 7P SE				01
CN002	**VB858100**	Connector Base Post	PH 2P SE				01
FL001	**VB835000**	Coil	FL5R200QNT 20uH				01
FL001	**VB971100**	Coil	FL5R200QN 20uH				01
FL002	**VB835000**	Coil	FL5R200QNT 20uH				01
FL002	**VB971100**	Coil	FL5R200QN 20uH				01
FL003	**V3085000**	Choke Coil	R-5C.10U 10uH				
FL003	**V3085100**	Choke Coil	R-5C 10U 10uH				
FL004	**VB835000**	Coil	FL5R200QNT 20uH				01
FL004	**VB971100**	Coil	FL5R200QN 20uH				01
FL005	**VB835000**	Coil	FL5R200QNT 20uH				01
FL005	**VB971100**	Coil	FL5R200QN 20uH				01
FL006	**V3085000**	Choke Coil	R-5C.10U 10uH				
FL006	**V3085100**	Choke Coil	R-5C 10U 10uH				
HP001	**LB101870**	Phone Jack	YKB21-5006		PHONES		03
HP002	**LB101870**	Phone Jack	YKB21-5006		PHONES		03
R0001	**V9295000**	Carbon Resistor	33.0 1/2 J				01
-0004	**V9295000**	Carbon Resistor	33.0 1/2 J				01
R0001	**V9458700**	Carbon Resistor	33.0 1/2 J TP				
-0004	**V9458700**	Carbon Resistor	33.0 1/2 J TP				
R0005	**--**	Jumper Wire	0.55		(VD04170)		
WH001	**VT890700**	GND Wire	L=150mm				01
*	**WE745000**	Circuit Board	MAEQ		(X6391C0)		
	WE987400	Bind Head Tapping Screw-B	3.0X12 MFZN2W3			2	01
	V5184100	Holder, Power Amplifier				2	03
	--	Jumper Wire	0.55		(VA07890)		
C0001	**WE662800**	Electrolytic Cap.	47 50.0V TP				
C0002	**WF204500**	Electrolytic Cap.	220 25.0V TE-				
C0003	**WF204500**	Electrolytic Cap.	220 25.0V TE-				
C0004	**WE662600**	Electrolytic Cap.	3.3 50.0V TP				
C0005	**WE662600**	Electrolytic Cap.	3.3 50.0V TP				
C0006	**WF204500**	Electrolytic Cap.	220 25.0V TE-				

*: New Parts

RANK: Japan only

REF NO.	PART NO.	DESCRIPTION			REMARKS	QTY	RANK
-0008	**WF204500**	Electrolytic Cap.	220 25.0V TE-				
C0009	**WE662600**	Electrolytic Cap.	3.3 50.0V TP				
-0014	**WE662600**	Electrolytic Cap.	3.3 50.0V TP				
C0015	**WE662800**	Electrolytic Cap.	47 50.0V TP				
C0016	**WE662800**	Electrolytic Cap.	47 50.0V TP				
C0017	**WE663100**	Electrolytic Cap.	100 50.0V TP				
C0018	**WF204500**	Electrolytic Cap.	220 25.0V TE-				
-0020	**WF204500**	Electrolytic Cap.	220 25.0V TE-				
C0021	**WE662500**	Electrolytic Cap.	1 50.0V TP				
C0022	**WE662500**	Electrolytic Cap.	1 50.0V TP				
C0023	**WF204400**	Electrolytic Cap.	22 25.0V TE-				
C0024	**WF204400**	Electrolytic Cap.	22 25.0V TE-				
C0025	**WF204500**	Electrolytic Cap.	220 25.0V TE-				
-0027	**WF204500**	Electrolytic Cap.	220 25.0V TE-				
C0028	**US065100**	Ceramic Capacitor-F (chip)	0.100 50V Z RECT.				
-0034	**US065100**	Ceramic Capacitor-F (chip)	0.100 50V Z RECT.				
C0028	**US145100**	Ceramic Capacitor-F (chip)	0.1000 25V Z RECT.				01
-0034	**US145100**	Ceramic Capacitor-F (chip)	0.1000 25V Z RECT.				01
C0035	**WF204500**	Electrolytic Cap.	220 25.0V TE-				
C0036	**US065100**	Ceramic Capacitor-F (chip)	0.100 50V Z RECT.				
C0036	**US145100**	Ceramic Capacitor-F (chip)	0.1000 25V Z RECT.				01
C0037	**US065100**	Ceramic Capacitor-F (chip)	0.100 50V Z RECT.				
C0037	**US145100**	Ceramic Capacitor-F (chip)	0.1000 25V Z RECT.				01
C0038	**US064100**	Ceramic Capacitor-B (chip)	0.0100 50V K RECT.				01
-0040	**US064100**	Ceramic Capacitor-B (chip)	0.0100 50V K RECT.				01
C0041	**US062100**	Ceramic Capacitor-SL(chip)	100P 50V J RECT.				01
C0042	**US062100**	Ceramic Capacitor-SL(chip)	100P 50V J RECT.				01
C0043	**US064100**	Ceramic Capacitor-B (chip)	0.0100 50V K RECT.				01
C0044	**US063100**	Ceramic Capacitor-B (chip)	1000P 50V K RECT.				01
-0047	**US063100**	Ceramic Capacitor-B (chip)	1000P 50V K RECT.				01
C0048	**US062560**	Ceramic Capacitor-SL(chip)	560P 50V J RECT.				01
C0049	**US062560**	Ceramic Capacitor-SL(chip)	560P 50V J RECT.				01
C0050	**US062100**	Ceramic Capacitor-SL(chip)	100P 50V J RECT.				01
C0051	**US062100**	Ceramic Capacitor-SL(chip)	100P 50V J RECT.				01
C0052	**VE326200**	Monolithic Mylar Capacitor	0.15 50V J RX TP				
C0052	**VR168500**	Monolithic Mylar Capacitor	ECQ-V1H154JL3				01
C0053	**UA654680**	Mylar Capacitor	0.0680 50V J RX TP				02
C0053	**VE325800**	Monolithic Mylar Capacitor	0.068 50V J RX TP				01
C0054	**VE326300**	Monolithic Mylar Capacitor	0.18 50V J RX TP				01
C0054	**VR168600**	Monolithic Mylar Capacitor	ECQ-V1H184JL3				01
C0055	**UA353560**	Mylar Capacitor	5600P 50V J RX TP				
C0055	**UA653560**	Mylar Capacitor	5600P 50V J RX TP				01
C0056	**UA353470**	Mylar Capacitor	4700P 50V J RX TP				01
C0056	**UA653470**	Mylar Capacitor	4700P 50V J RX TP				01
C0057	**VE326200**	Monolithic Mylar Capacitor	0.15 50V J RX TP				
C0057	**VR168500**	Monolithic Mylar Capacitor	ECQ-V1H154JL3				01
C0058	**UA654680**	Mylar Capacitor	0.0680 50V J RX TP				02
C0058	**VE325800**	Monolithic Mylar Capacitor	0.068 50V J RX TP				01
C0059	**VE326300**	Monolithic Mylar Capacitor	0.18 50V J RX TP				01
C0059	**VR168600**	Monolithic Mylar Capacitor	ECQ-V1H184JL3				01
C0060	**UA353560**	Mylar Capacitor	5600P 50V J RX TP				01
C0060	**UA653560**	Mylar Capacitor	5600P 50V J RX TP				01
C0061	**UA353470**	Mylar Capacitor	4700P 50V J RX TP				01
C0061	**UA653470**	Mylar Capacitor	4700P 50V J RX TP				01
C0062	**VE326800**	Monolithic Mylar Capacitor	0.47 50V J RX TP				01
C0062	**VR169200**	Monolithic Mylar Capacitor	ECQ-V1H474JL3				01
C0063	**VE326800**	Monolithic Mylar Capacitor	0.47 50V J RX TP				01
C0063	**VR169200**	Monolithic Mylar Capacitor	ECQ-V1H474JL3				01
C0064	**UA654680**	Mylar Capacitor	0.0680 50V J RX TP				02
C0064	**VE325800**	Monolithic Mylar Capacitor	0.068 50V J RX TP				01
C0065	**UA654470**	Mylar Capacitor	0.0470 50V J RX TP				01
C0065	**VE325600**	Monolithic Mylar Capacitor	0.047 50V J RX TP				01
C0066	**UA353270**	Mylar Capacitor	2700P 50V J RX TP				01
C0066	**UA653270**	Mylar Capacitor	2700P 50V J RX TP				01
C0067	**VE326800**	Monolithic Mylar Capacitor	0.47 50V J RX TP				01
C0067	**VR169200**	Monolithic Mylar Capacitor	ECQ-V1H474JL3				01
C0068	**VE326800**	Monolithic Mylar Capacitor	0.47 50V J RX TP				01
C0068	**VR169200**	Monolithic Mylar Capacitor	ECQ-V1H474JL3				01
C0069	**UA654680**	Mylar Capacitor	0.0680 50V J RX TP				02
C0069	**VE325800**	Monolithic Mylar Capacitor	0.068 50V J RX TP				01

∗: New Parts

RANK: Japan only

REF NO.	PART NO.	DESCRIPTION			REMARKS	QTY	RANK
C0070	**UA654470**	Mylar Capacitor	0.0470 50V J RX TP				01
C0070	**VE325600**	Monolithic Mylar Capacitor	0.047 50V J RX TP				01
C0071	**UA353270**	Mylar Capacitor	2700P 50V J RX TP				01
C0071	**UA653270**	Mylar Capacitor	2700P 50V J RX TP				01
C0072	**US061560**	Ceramic Capacitor-CH(chip)	56P 50V J RECT.				01
C0073	**US061560**	Ceramic Capacitor-CH(chip)	56P 50V J RECT.				01
C0074	**US064100**	Ceramic Capacitor-B (chip)	0.0100 50V K RECT.				01
C0075	**US062470**	Ceramic Capacitor-SL(chip)	470P 50V J RECT.				01
C0076	**US062470**	Ceramic Capacitor-SL(chip)	470P 50V J RECT.				01
C0079	**US065100**	Ceramic Capacitor-F (chip)	0.100 50V Z RECT.				
C0079	**US145100**	Ceramic Capacitor-F (chip)	0.1000 25V Z RECT.				01
C0080	**US065100**	Ceramic Capacitor-F (chip)	0.100 50V Z RECT.				
C0080	**US145100**	Ceramic Capacitor-F (chip)	0.1000 25V Z RECT.				01
C0081	**US064100**	Ceramic Capacitor-B (chip)	0.0100 50V K RECT.				01
C0082	**US063100**	Ceramic Capacitor-B (chip)	1000P 50V K RECT.				01
C0083	**US063100**	Ceramic Capacitor-B (chip)	1000P 50V K RECT.				01
C0084	**US064100**	Ceramic Capacitor-B (chip)	0.0100 50V K RECT.				01
-0086	**US064100**	Ceramic Capacitor-B (chip)	0.0100 50V K RECT.				01
C0087	**US065100**	Ceramic Capacitor-F (chip)	0.100 50V Z RECT.				
-0094	**US065100**	Ceramic Capacitor-F (chip)	0.100 50V Z RECT.				
C0087	**US145100**	Ceramic Capacitor-F (chip)	0.1000 25V Z RECT.				01
-0094	**US145100**	Ceramic Capacitor-F (chip)	0.1000 25V Z RECT.				01
C0095	**WE651200**	Electrolytic Cap.-BP	1.00 50.0V TP				
-0098	**WE651200**	Electrolytic Cap.-BP	1.00 50.0V TP				
CN001	**LB918050**	Base Post Connector	XH 5P TE				01
CN002	**VB390700**	Connector Base Post	PH 11P TE				01
CN003	**VB390400**	Connector Base Post	PH 8P TE				01
CN004	**VB390000**	Connector Base Post	PH 4P TE				01
CN005	**VB390300**	Connector Base Post	PH 7P TE				01
CN006	**LB932040**	Base Post Connector	VH 4P TE				01
D0001	**VR496500**	Diode	MA111 FLAT TP				
D0001	**VT332900**	Diode	1SS355 TE-17 TP				01
D0002	**VR496500**	Diode	MA111 FLAT TP				
D0002	**VT332900**	Diode	1SS355 TE-17 TP				01
D0004	**VR496500**	Diode	MA111 FLAT TP				
-0006	**VR496500**	Diode	MA111 FLAT TP				
D0004	**VT332900**	Diode	1SS355 TE-17 TP				01
-0006	**VT332900**	Diode	1SS355 TE-17 TP				01
HS001	**--**	Heat Sink	OSV3353B-L100-MF		(WE15040)		
HS001	**--**	Heat Sink	HEAT SINK		(WF23260)		
IC001	**XU387A00**	IC	UPC24M12AHF-AZ		REGULATOR +12V		03
IC002	**XR607A00**	IC	UPC2405AHF-AZ		REGULATOR +5V		04
IC003	**XT131A00**	IC	LA6517M		POWER AMP		04
IC004	**XU131A00**	IC	TA8233H		POWER AMP. 20W+20W		06
IC005	**XF291A00**	IC	UPC4570G2-T1-A		OP AMP		03
IC006	**XF291A00**	IC	UPC4570G2-T1-A		OP AMP		03
IC007	**XE518A00**	IC	UPC4574G2-T1-A		OP AMP		03
IC009	**XF291A00**	IC	UPC4570G2-T1-A		OP AMP		03
IC010	**XE518A00**	IC	UPC4574G2-T1-A		OP AMP		03
IC011	**XF291A00**	IC	UPC4570G2-T1-A		OP AMP		03
R0001	**RD357100**	Carbon Resistor (chip)	10.0K 63M J RECT.				01
-0005	**RD357100**	Carbon Resistor (chip)	10.0K 63M J RECT.				01
R0006	**RD356120**	Carbon Resistor (chip)	1.2K 63M J RECT.				01
R0007	**RD356120**	Carbon Resistor (chip)	1.2K 63M J RECT.				01
R0008	**RD357100**	Carbon Resistor (chip)	10.0K 63M J RECT.				01
R0009	**RD357100**	Carbon Resistor (chip)	10.0K 63M J RECT.				01
R0010	**RD350000**	Carbon Resistor (chip)	0 63M J RECT.				01
R0011	**RD350000**	Carbon Resistor (chip)	0 63M J RECT.				01
R0012	**RD355100**	Carbon Resistor (chip)	100.0 63M J RECT.				01
R0013	**RD355100**	Carbon Resistor (chip)	100.0 63M J RECT.				01
R0016	**RD355100**	Carbon Resistor (chip)	100.0 63M J RECT.				01
R0017	**RD355100**	Carbon Resistor (chip)	100.0 63M J RECT.				01
R0018	**RD357470**	Carbon Resistor (chip)	47.0K 63M J RECT.				01
R0019	**RD356330**	Carbon Resistor (chip)	3.3K 63M J RECT.				01
R0020	**RD357470**	Carbon Resistor (chip)	47.0K 63M J RECT.				01
R0021	**RD356330**	Carbon Resistor (chip)	3.3K 63M J RECT.				01
R0022	**RD357560**	Carbon Resistor (chip)	56.0K 63M J RECT.				01
R0023	**RD357180**	Carbon Resistor (chip)	18.0K 63M J RECT.				01
R0024	**RD355390**	Carbon Resistor (chip)	390.0 63M J RECT.				01
R0025	**RD355820**	Carbon Resistor (chip)	820.0 63M J RECT.				01

∗: New Parts

RANK: Japan only

REF NO.	PART NO.	DESCRIPTION			REMARKS	QTY	RANK
R0026	**RD356100**	Carbon Resistor (chip)	1.0K 63M J RECT.				01
R0027	**RD357180**	Carbon Resistor (chip)	18.0K 63M J RECT.				01
R0028	**RD357180**	Carbon Resistor (chip)	18.0K 63M J RECT.				01
R0029	**RD355390**	Carbon Resistor (chip)	390.0 63M J RECT.				01
R0030	**RD355820**	Carbon Resistor (chip)	820.0 63M J RECT.				01
R0031	**RD356100**	Carbon Resistor (chip)	1.0K 63M J RECT.				01
R0032	**RD357180**	Carbon Resistor (chip)	18.0K 63M J RECT.				01
R0033	**RD357560**	Carbon Resistor (chip)	56.0K 63M J RECT.				01
R0034	**RD357470**	Carbon Resistor (chip)	47.0K 63M J RECT.				01
R0035	**RD356150**	Carbon Resistor (chip)	1.5K 63M J RECT.				01
R0036	**RD357180**	Carbon Resistor (chip)	18.0K 63M J RECT.				01
-0038	**RD357180**	Carbon Resistor (chip)	18.0K 63M J RECT.				01
R0039	**RD356120**	Carbon Resistor (chip)	1.2K 63M J RECT.				01
R0040	**RD356150**	Carbon Resistor (chip)	1.5K 63M J RECT.				01
R0041	**RD357180**	Carbon Resistor (chip)	18.0K 63M J RECT.				01
-0043	**RD357180**	Carbon Resistor (chip)	18.0K 63M J RECT.				01
R0044	**RD356120**	Carbon Resistor (chip)	1.2K 63M J RECT.				01
R0045	**RD357470**	Carbon Resistor (chip)	47.0K 63M J RECT.				01
R0046	**RD357100**	Carbon Resistor (chip)	10.0K 63M J RECT.				01
R0048	**RD357100**	Carbon Resistor (chip)	10.0K 63M J RECT.				01
R0050	**RD357560**	Carbon Resistor (chip)	56.0K 63M J RECT.				01
R0051	**RD357560**	Carbon Resistor (chip)	56.0K 63M J RECT.				01
R0052	**RD357100**	Carbon Resistor (chip)	10.0K 63M J RECT.				01
R0053	**RD357470**	Carbon Resistor (chip)	47.0K 63M J RECT.				01
R0054	**RD357470**	Carbon Resistor (chip)	47.0K 63M J RECT.				01
R0055	**RD355560**	Carbon Resistor (chip)	560.0 63M J RECT.				01
R0056	**RD357470**	Carbon Resistor (chip)	47.0K 63M J RECT.				01
R0057	**RD355560**	Carbon Resistor (chip)	560.0 63M J RECT.				01
R0058	**RD357470**	Carbon Resistor (chip)	47.0K 63M J RECT.				01
R0059	**RD355560**	Carbon Resistor (chip)	560.0 63M J RECT.				01
R0060	**RD357470**	Carbon Resistor (chip)	47.0K 63M J RECT.				01
R0061	**RD355560**	Carbon Resistor (chip)	560.0 63M J RECT.				01
R0062	**RD357470**	Carbon Resistor (chip)	47.0K 63M J RECT.				01
R0063	**RD355560**	Carbon Resistor (chip)	560.0 63M J RECT.				01
R0064	**RD357100**	Carbon Resistor (chip)	10.0K 63M J RECT.				01
R0065	**RD357470**	Carbon Resistor (chip)	47.0K 63M J RECT.				01
R0066	**RD357470**	Carbon Resistor (chip)	47.0K 63M J RECT.				01
R0067	**RD355560**	Carbon Resistor (chip)	560.0 63M J RECT.				01
R0068	**RD357470**	Carbon Resistor (chip)	47.0K 63M J RECT.				01
R0069	**RD355560**	Carbon Resistor (chip)	560.0 63M J RECT.				01
R0070	**RD357470**	Carbon Resistor (chip)	47.0K 63M J RECT.				01
R0071	**RD355560**	Carbon Resistor (chip)	560.0 63M J RECT.				01
R0072	**RD357470**	Carbon Resistor (chip)	47.0K 63M J RECT.				01
R0073	**RD355560**	Carbon Resistor (chip)	560.0 63M J RECT.				01
R0074	**RD357470**	Carbon Resistor (chip)	47.0K 63M J RECT.				01
R0075	**RD355560**	Carbon Resistor (chip)	560.0 63M J RECT.				01
R0076	**RD356330**	Carbon Resistor (chip)	3.3K 63M J RECT.				01
R0077	**RD356330**	Carbon Resistor (chip)	3.3K 63M J RECT.				01
R0079	**RD150000**	Carbon Resistor (chip)	0.0 1/4 J TP				01
R0080	**RD150000**	Carbon Resistor (chip)	0.0 1/4 J TP				01
R0082	**RD356680**	Carbon Resistor (chip)	6.8K 63M J RECT.				01
R0083	**RD356680**	Carbon Resistor (chip)	6.8K 63M J RECT.				01
R0084	**RD354330**	Carbon Resistor (chip)	33.0 63M J RECT.				01
R0085	**RD354330**	Carbon Resistor (chip)	33.0 63M J RECT.				01
R0086	**RD356270**	Carbon Resistor (chip)	2.7K 63M J RECT.				01
R0087	**RD356100**	Carbon Resistor (chip)	1.0K 63M J RECT.				01
R0088	**RD356100**	Carbon Resistor (chip)	1.0K 63M J RECT.				01
R0089	**RD356270**	Carbon Resistor (chip)	2.7K 63M J RECT.				01
R0090	**RD357120**	Carbon Resistor (chip)	12.0K 63M J RECT.				01
R0091	**RD357120**	Carbon Resistor (chip)	12.0K 63M J RECT.				01
R0092	**RD356560**	Carbon Resistor (chip)	5.6K 63M J RECT.				01
R0093	**RD356560**	Carbon Resistor (chip)	5.6K 63M J RECT.				01
R0094	**RD355560**	Carbon Resistor (chip)	560.0 63M J RECT.				01
R0095	**RD355560**	Carbon Resistor (chip)	560.0 63M J RECT.				01
R0098	**RD350000**	Carbon Resistor (chip)	0 63M J RECT.				01
R0099	**RD356470**	Carbon Resistor (chip)	4.7K 63M J RECT.				01
R0101	**RD357100**	Carbon Resistor (chip)	10.0K 63M J RECT.				01
R0102	**RD354100**	Carbon Resistor (chip)	10.0 63M J RECT.				01
-0105	**RD354100**	Carbon Resistor (chip)	10.0 63M J RECT.				01
R0106	**RD357220**	Carbon Resistor (chip)	22.0K 63M J RECT.				01

∗: New Parts

RANK: Japan only

	REF NO.	PART NO.	DESCRIPTION			REMARKS	QTY	RANK
	R0107	**RD356470**	Carbon Resistor (chip)	4.7K 63M J RECT.				01
	R0108	**RD357100**	Carbon Resistor (chip)	10.0K 63M J RECT.				01
	R0109	**RD356470**	Carbon Resistor (chip)	4.7K 63M J RECT.				01
	R0110	**RD357220**	Carbon Resistor (chip)	22.0K 63M J RECT.				01
	R0111	**RD356470**	Carbon Resistor (chip)	4.7K 63M J RECT.				01
	R0112	**RD357560**	Carbon Resistor (chip)	56.0K 63M J RECT.				01
	R0113	**RD357560**	Carbon Resistor (chip)	56.0K 63M J RECT.				01
	R0114	**RD150000**	Carbon Resistor (chip)	0.0 1/4 J TP				01
	RY001	**V8245600**	Relay	DC ATXD203 12V				04
	RY001	**V8616500**	Relay	DC G6S-2 12V				04
	RY002	**WB476400**	Relay	DC G5PA-28 12V				03
	TR001	**VJ927100**	Transistor	2SC2712-Y(TE85R,F)				01
	-003	**VJ927100**	Transistor	2SC2712-Y(TE85R,F)				01
	TR001	**VV556400**	Transistor	2SC2412K Q,R,S TP				01
	-003	**VV556400**	Transistor	2SC2412K Q,R,S TP				01
	TR001	**V4767500**	Transistor	2SD601A-(TX) Q,R,S				01
	-003	**V4767500**	Transistor	2SD601A-(TX) Q,R,S				01
*		**WE910200**	Circuit Board	MVR		(WE70440)(X6371C0)		
*		**WE909600**	Circuit Board	PANEL		(WE70440)(X6371C0)		
	CN001	**VB858800**	Connector Base Post	PH 9P SE				01
	CN002	**VB858700**	Connector Base Post	PH 8P SE				01
	LD001	**VU067800**	LED Red	SEL6210S-TP5		REC		01
	LD002	**VU067800**	LED Red	SEL6210S-TP5		PLAY		01
	R0001	**HF455390**	Carbon Resistor	390.0 1/4 J AX TP				01
	R0002	**HF455390**	Carbon Resistor	390.0 1/4 J AX TP				01
	SW001	**V8889300**	Push Switch	EVQ 11Y 07K		DEMO/SONG		01
	SW001	**VV439800**	Tact Switch	SKQNAJ				01
	SW002	**V8889300**	Push Switch	EVQ 11Y 07K		PIANO/VOICE		01
	SW002	**VV439800**	Tact Switch	SKQNAJ				01
	SW003	**V8889300**	Push Switch	EVQ 11Y 07K		SELECT		01
	SW003	**VV439800**	Tact Switch	SKQNAJ				01
	SW004	**V8889300**	Push Switch	EVQ 11Y 07K		REC		01
	SW004	**VV439800**	Tact Switch	SKQNAJ				01
	SW005	**V8889300**	Push Switch	EVQ 11Y 07K		PLAY		01
	SW005	**VV439800**	Tact Switch	SKQNAJ				01
	SW006	**V8889300**	Push Switch	EVQ 11Y 07K		METRONOME		01
	SW006	**VV439800**	Tact Switch	SKQNAJ				01
	TP1	**--**	GND Wire			(WF42250)		
	VR001	**V0075800**	Rotary Variable Resistor	A10.0K RK14K1240		MASTER VOLUME		03
		WB970200	Circuit Board	PEDAL		(WB97010)(XR780C0)		05
		VB858500	Connector Base Post	PH 6P SE				01
		--	Jumper Wire	0.55		(VD04170)		
		--	GND Wire			(VZ01760)		
		VN637600	Circuit Board	PL		(VN63740)(XL151B0)		03
		VU659100	Circuit Board	PL		(VU65900)(XR898A0)		03
		VB858100	Connector Base Post	PH 2P SE				01
		VD180000	LED Red	SLZ-190B-03		POWER indicator		01
		V0010800	Circuit Board	PS		U (V001140)(XU372E0/F0)		11
⚠		**VT308200**	AC Inlet	2P CCT9302-0201F		AC INLET		02
		LB201530	Fuse Holder	PIN TYPE PC-FH1				01
		--	Jumper Wire	0.55		(VD04170)		
⚠	C1	**VY675100**	Capacitor	4700P 250V J.U.C.S				01
⚠	C2	**VY675100**	Capacitor	4700P 250V J.U.C.S				01
⚠	C3	**VY675000**	Capacitor	0.010 250V J.U.C.S				01
	C4	**UA654470**	Mylar Capacitor	0.0470 50V J RX TP				01
	C5	**V2126200**	Electrolytic Cap.	10000 25.0V FORM.				04
	C6	**UJ866330**	Electrolytic Cap.	3.30 50.0V RX TP				01
	CN1	**LB932030**	Base Post Connector	VH 3P TE				01
	CN2	**LB918050**	Base Post Connector	XH 5P TE				01
	D1	**V7803100**	Diode	1T4-T/A52 TP				
	D1	**V9362200**	Diode	1T4-T/A26 TP				
	D1	**WB520600**	Diode	10EDB40-TA2B5 TE-5				01
	D1	**WD009700**	Diode	10EDB40-TA1B2 TE-2				
	D2	**V7803100**	Diode	1T4-T/A52 TP				
	D2	**V9362200**	Diode	1T4-T/A26 TP				
	D2	**WB520600**	Diode	10EDB40-TA2B5 TE-5				01

*: New Parts

RANK: Japan only

	REF NO.	PART NO.	DESCRIPTION			REMARKS	QTY	RANK
	D2	**WD009700**	Diode	10EDB40-TA1B2 TE-2				
⚠	DB1	**VN011300**	Diode Stack	D3SBA20 4.0A 200V				03
⚠	F1	**KB003570**	Fuse	2.00A JU 250V				01
⚠	F3	**KB003630**	Fuse	5.00A JU 125V				01
	J2	**--**	Jumper Wire	0.55		(VD04170)		
	L1	**VF790900**	Coil	SU10V-D20010 10uH				03
	R1	**HF456100**	Carbon Resistor	1.0K 1/4 J AX TP				01
	R1	**HF756100**	Carbon Resistor	1.0K 1/4 J AX TP				01
⚠		**X6318A00**	Power Transformer	J/UL1411/CSA C22.2		U		
⚠		**VS353700**	Power Switch Assembly			POWER		08
⚠		**VC843500**	Push Switch	SDDLB1 J.U.C.S.VD		POWER		03
*		**X6684A00**	Speaker	F3E5A13-1 4ohm 10W			2	

*: New Parts

RANK: Japan only

YDP-323

■ YDP-323 BLOCK DIAGRAM

WARNING
Components having special characteristics are marked ⚠ and must be replaced with parts having specification equal to those originally installed.

Note : See parts list for details of circuit board component parts.

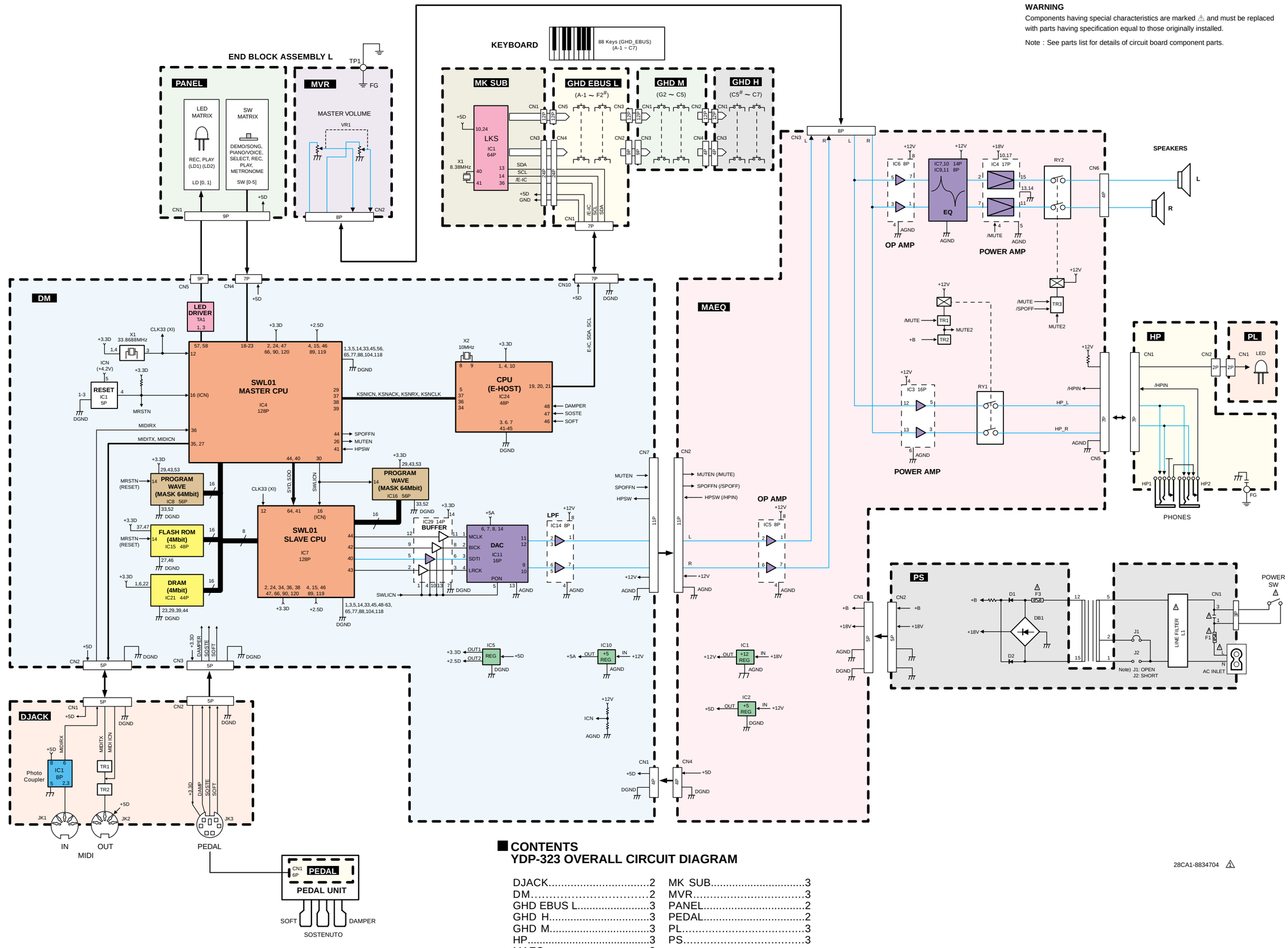

28CA1-8834704 ⚠

■ CONTENTS
YDP-323 OVERALL CIRCUIT DIAGRAM

DJACK.....2
DM.....2
GHD EBUS L.....3
GHD H.....3
GHD M.....3
HP.....3
MAEQ.....3
MK SUB.....3
MVR.....3
PANEL.....2
PEDAL.....2
PL.....3
PS.....3

■ YDP-323 CIRCUIT BOARD LAYOUT & WIRING

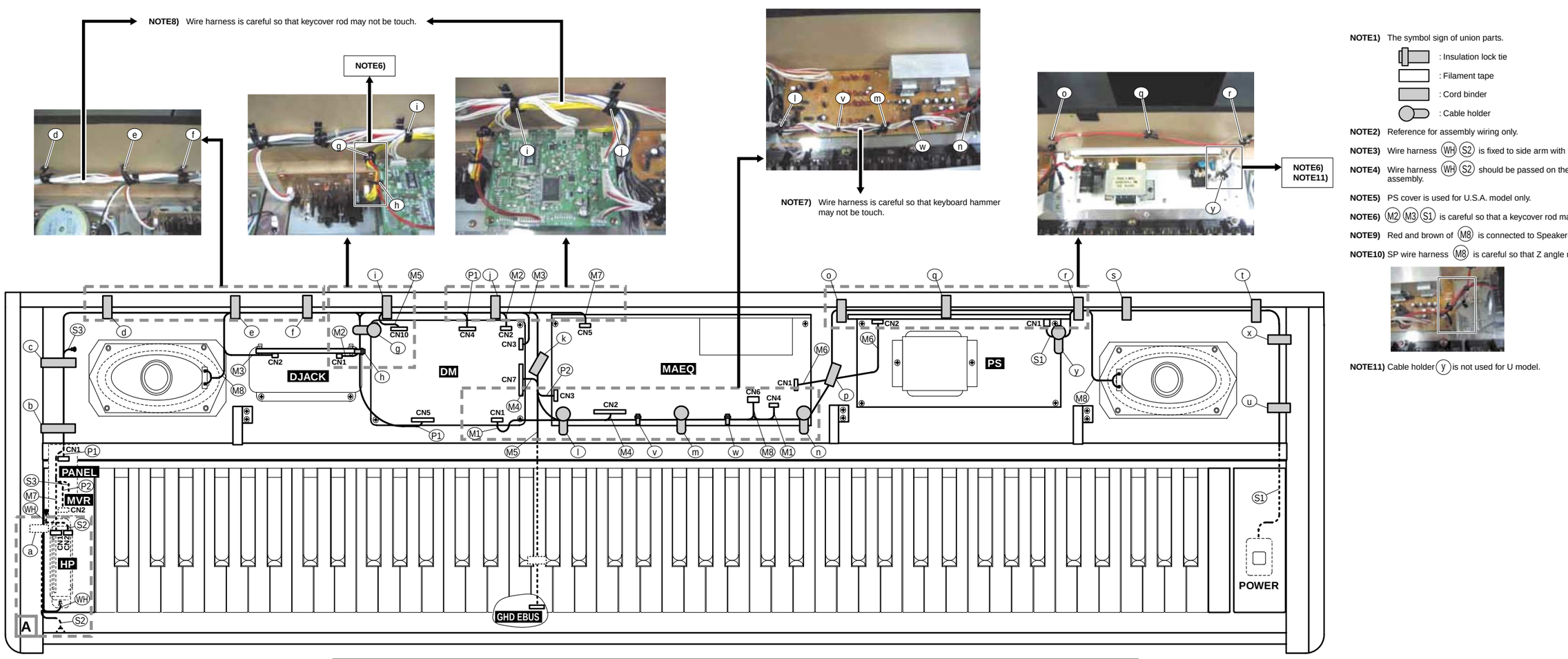

NOTE1) The symbol sign of union parts.
: Insulation lock tie
: Filament tape
: Cord binder
: Cable holder

NOTE2) Reference for assembly wiring only.

NOTE3) Wire harness (WH) (S2) is fixed to side arm with filament tape.

NOTE4) Wire harness (WH) (S2) should be passed on the side of side arm assembly.

NOTE5) PS cover is used for U.S.A. model only.

NOTE6) (M2) (M3) (S1) is careful so that a keycover rod may not be touch.

NOTE9) Red and brown of (M8) is connected to Speaker-R.

NOTE10) SP wire harness (M8) is careful so that Z angle may not be touch.

NOTE11) Cable holder (y) is not used for U model.

DETAIL A:

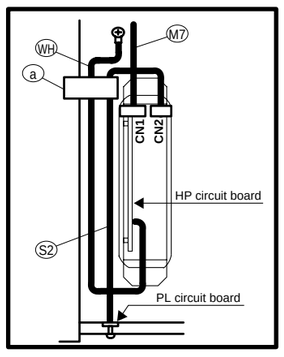

2NC-WE89380-3 ⚠3

Location	Part No.	Part Name	Description	Fix Position	Note	
M1	(WE30650)	Connector assembly PH	DM CN1 - MAEQ CN4	l v m w	4P-350	Main Unit
M2	(WE95320)	Connector assembly MIDI	DM CN2 - DJACK CN1	j i g h	5P-250	
M3	(WE30950)	Connector assembly PH	DM CN3 - DJACK CN2	j i f e	5P-350	
M4	(WE32710)	Connector assembly PH	DM CN7 - MAEQ CN2	l	11P-150	
M5	WF740600	Connector assembly KB	DM CN10 - Keyboard	i j k	7P-530	
M6	(WE95330)	Connector assembly PS	MAEQ CN1 - PS CN2	p	5P-150	
M7	(WE31650)	Connector assembly PH	MAEQ CN5 - HP CN1	j i f e d c b	7P-850	
M8	(WE95310)	Connector assembly SP	MAEQ CN6 - Speaker R - Speaker L	n p o q r w m v l k j i f e	4P	
P1	(WE95340)	Connector assembly PN	PANEL CN1 - DM CN4 - DM CN5	b c d e f i b c d e f g h	9P/7P	End Block Assembly L
P2	(WE95350)	Connector assembly MV	MAEQ CN3 - MVR CN2	k j i f e d c b	8P-850	
S3	(WF42250)	GND wire	MV TP1 - Keybed	b c		
S1	VS353700	Connector assembly PSW	PS CN1 - Power switch	y r s t x u		End Block Assembly R
S2	(WE30010)	Connector assembly PH	HP CN2 - PL	a	2P-150	Front Rail Assembly
WH	VT890700	GND wire	HP - Keybed	a	L = 150 mm	HP Circuit Board

NOTE) The parts with "( )" in "Part No." are not available as service parts.

2NC-WE89380-4 ⚠1

YDP-323

■ YDP-323 OVERALL CIRCUIT DIAGRAM 1/2 (DJACK, DM, PANEL, PEDAL)

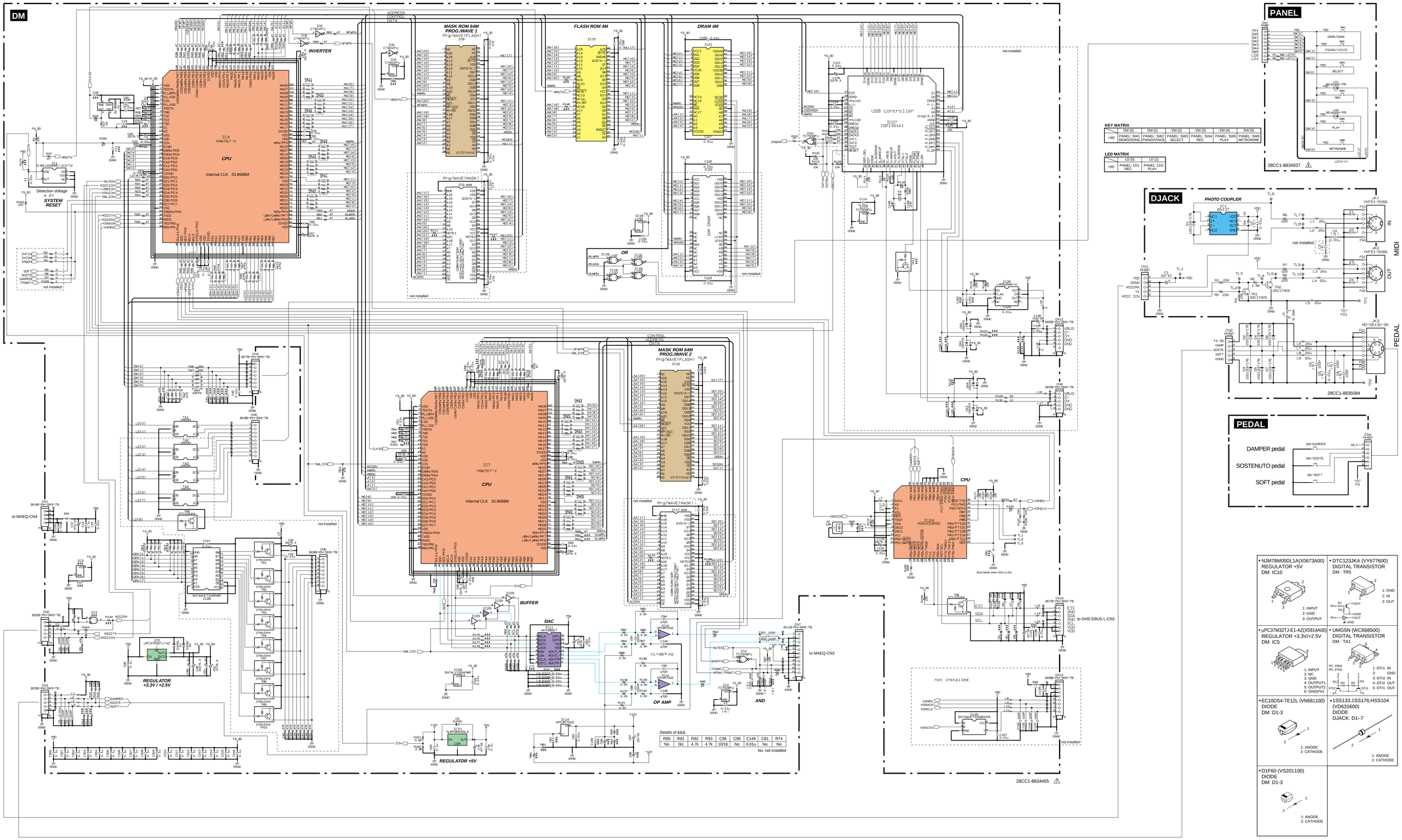

▮▮▮ : Not installed
(⊕) : Ceramic Capacitor
Note : See parts list for details of circuit board component parts.

■ YDP-323 OVERALL CIRCUIT DIAGRAM 2/2 (GHD EBUS L, GHD H, GHD M, HP, MAEQ, MK SUB, MVR, PL, PS)

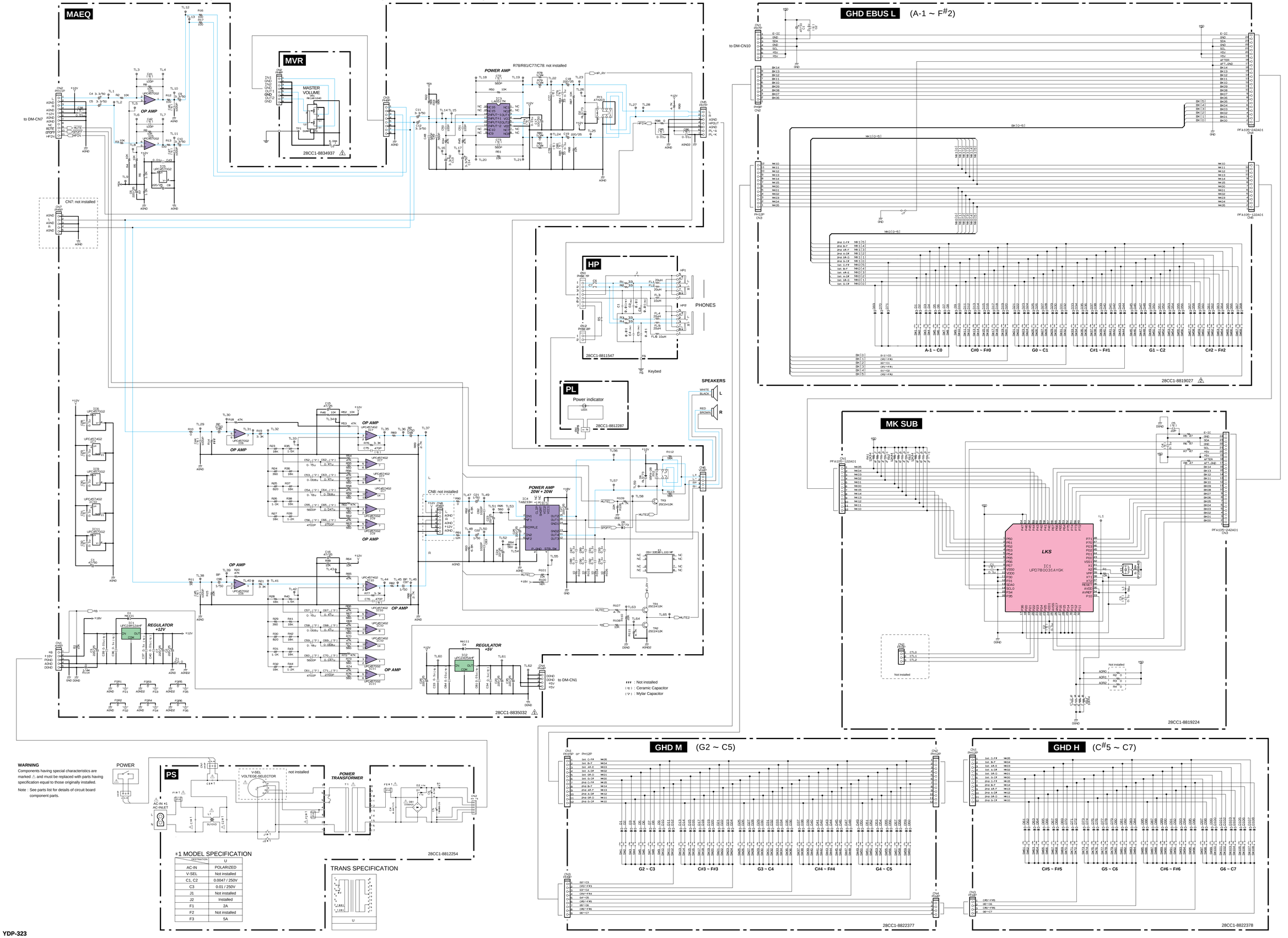

WARNING
Components having special characteristics are marked △ and must be replaced with parts having specification equal to those originally installed.
Note : See parts list for details of circuit board component parts.

*1 MODEL SPECIFICATION

DESTINATION	U
AC-IN	POLARIZED
V-SEL	Not installed
C1, C2	0.0047 / 250V
C3	0.01 / 250V
J1	Not installed
J2	Installed
F1	2A
F2	Not installed
F3	5A

- μPC24M12AHF-AZ (XU387A00) REGULATOR +12V MAEQ: IC1
  1: INPUT 2: GND 3: OUTPUT
- μPC2405AHF (XR607A00) REGULATOR +5V MAEQ: IC2
  1: INPUT 2: COMMON 3: OUTPUT
- 1T4-T/A52 TP (V7803100) 1T4-T/A26 TP (V9362200) DIODE PS: D1, 2
  1: ANODE 2: CATHODE
- 1SS355 TE-17 (VT332900) DIODE MAEQ: D1, 2, 4–6
  1: ANODE 2: CATHODE
- D3SBA20 (VN011300) DIODE STACK 4.0A 200V PS: DB1
- 2SC2412K(VV556400) TRANSISTOR MAEQ: TR1–3
  1: EMITTER 2: BASE 3: COLLECTOR
- 1SS133, 1SS176 (VB941200) DIODE GHD EBUS L: D1–69 GHD H: D61–108 GHD M: D1–60
  1: ANODE 2: CATHODE