DIGITAL PIANO

YDP-S52B / YDP-S52WH

SERVICE MANUAL



YDP-S52B



YDP-S52WH

■ CONTENTS

SPECIFICATIONS 3
PANEL LAYOUT 4
DISASSEMBLY PROCEDURE 5
CIRCUIT BOARDS 20
DM Circuit Board Test Method 30
TEST PROGRAM 32
INITIALIZING THE SETTINGS 41
SYSTEM BOOTING FLOW CHART 42
PARTS LIST
BLOCK DIAGRAM/CIRCUIT BOARD LAYOUT & WIRING
OVERALL CIRCUIT DIAGRAM

CL 001910

YAMAHA
HAMAMATSU, JAPAN

© 2015 Yamaha Corporation.

IMPORTANT NOTICE

This manual has been provided for the use of authorized Yamaha Retailers and their service personnel. It has been assumed that basic service procedures inherent to the industry, and more specifically Yamaha Products, are already known and understood by the users, and have therefore not been restated.

WARNING : Failure to follow appropriate service and safety procedures when servicing this product may result in personal injury, destruction of expensive components and failure of the product to perform as specified. For these reasons, we advise all Yamaha product owners that all service required should be performed by an authorized Yamaha Retailer or the appointed service representative.

IMPORTANT : This presentation or sale of this manual to any individual or firm does not constitute authorization certification, recognition of any applicable technical capabilities, or establish a principal-agent relationship of any form.

The data provided is believed to be accurate and applicable to the unit(s) indicated on the cover. The research engineering, and service departments of Yamaha are continually striving to improve Yamaha products. Modifications are, therefore, inevitable and changes in specification are subject to change without notice or obligation to retrofit. Should any discrepancy appear to exist, please contact the distributor's Service Division.

WARNING : Static discharges can destroy expensive components. Discharge any static electricity your body may have accumulated by grounding yourself to the ground bus in the unit (heavy gauge black wires connect to this bus.)

IMPORTANT : Turn the unit OFF during disassembly and parts replacement. Recheck all work before you apply power to the unit.

WARNING: This product contains chemicals known to the State of California to cause cancer, or birth defects or other reproductive harm.

DO NOT PLACE SOLDER, ELECTRICAL/ELECTRONIC OR PLASTIC COMPONENTS IN YOUR MOUTH FOR ANY REASON WHAT SO EVER!

Avoid prolonged, unprotected contact between solder and your skin! When soldering, do not inhale solder fumes or expose eyes to solder/flux vapor!

If you come in contact with solder or components located inside the enclosure of this product, wash your hands before handling food.

IMPORTANT NOTICE FOR THE UNITED KINGDOM
Connecting the Plug and Cord

IMPORTANT: The wires in this mains lead are coloured in accordance with the following code:
BLUE : NEUTRAL
BROWN : LIVE

As the colours of the wires in the mains lead of this apparatus may not correspond with the coloured makings identifying the terminals in your plug proceed as follows:
The wire which is coloured BLUE must be connected to the terminal which is marked with the letter N or coloured BLACK.
The wire which is coloured BROWN must be connected to the terminal which is marked with the letter L or coloured RED.
Making sure that neither core is connected to the earth terminal of the three pin plug.

• This applies only products distributed by Yamaha-Kemble music (U.K.) Ltd. (2 wires)

WARNING

Components having special characteristics are marked ⚠ and must be replaced with parts having specification equal to those originally installed.

SAVING DATA



Be sure to perform it

Saving and backing up your data
The panel settings and some other types of data are not retained in memory when you turn off the power to the instrument. Save data you want to keep to the Registration Memory.
Saved data may be lost due to malfunction or incorrect operation.
Save important data to a USB storage device/or other external device such as a computer.

SPECIFICATIONS

Items			YDP-S52
Size/Weight	Width		1353 mm [53-1/4"]
	Height (Key cover open)		792 mm [31-3/16"] (976 mm [38-27/64"])
	Depth (Key cover open)		309 mm [12-11/64"] (317 mm [12-15/32"]) * With anti-fall brackets attached, the depth is 404 mm [15-57/64"].
	Weight		37.8 kg [83 lbs., 5 oz.]
Control Interface	Keyboard	Number of Keys	88
		Type	GH (Graded Hammer) keyboard with Synthetic ivory keytops
		Touch Response	Hard/Medium/Soft/Fixed
	Pedal	Number of Pedals	3
		Half Pedal	Yes (Damper)
		Functions	Damper, Sostenuto, Soft
	Panel Language		English
Cabinet	Key Cover Style		Folding
	Music Rest		Yes
Voices	Tone Generation	Piano Sound	Pure CF Sound Engine
	Piano Effect	Damper Resonance	Yes
	Polyphony	Number of Polyphony (Max.)	192
	Preset	Number of Voices	10
Effects	Types	Reverb	4 types
		Intelligent Acoustic Control (IAC)	Yes
		Stereophonic Optimizer	Yes
	Functions	Dual	Yes
		Duo	Yes
Recording/Playback (MIDI data only; audio not supported)	Preset	Number of Preset Songs	10 Demo Songs, 50 Piano Preset Songs
	Recording	Number of Songs	1
		Number of Tracks	2
		Data Capacity	100 KB/Song (Approx. 11,000 notes)
	Compatible Data Format	Recording	SMF (Format 0)
		Playback	SMF (Format 0 & 1)
Functions	Overall Controls	Metronome	Yes
		Tempo	5 – 280
		Transpose	-6 – 0 – +6
		Tuning	414.8 – 440.0 – 466.8 Hz
Storage and Connectivity	Storage	Internal Memory	Total maximum size approx. 900 KB (User song: One song approx. 100 KB, Loading song data from a computer: Up to 10 Songs)
	Connectivity	Headphones	Standard stereo phone jack (x 2)
		USB TO HOST	Yes
Sound System	Amplifiers		20 W x 2
	Speakers		Oval (12 cm x 6 cm) x 2
	Acoustic Optimizer		Yes
Power Supply	Adaptor		PA-300C or an equivalent recommended by Yamaha
	Power Consumption		14 W (When using PA-300C AC adaptor)
	Auto Power Off		Yes
Included Accessories			• Owner's Manual • Quick Operation Guide • "50 Greats for the Piano" (Music Book) • AC adaptor: PA-300C or an equivalent recommended by Yamaha* • Power cord* • Warranty* • Online Member Product Registration * May not be included depending on your particular area. Please check with your Yamaha dealer.
Separately Sold Accessories (May not be available depending on your locale.)			• Bench: BC-108 • Headphones: HPE-150 • AC adaptor: PA-300C or an equivalent recommended by Yamaha • USB MIDI Interface for iPhone/iPod touch/iPad: i-UX1

■ PANEL LAYOUT

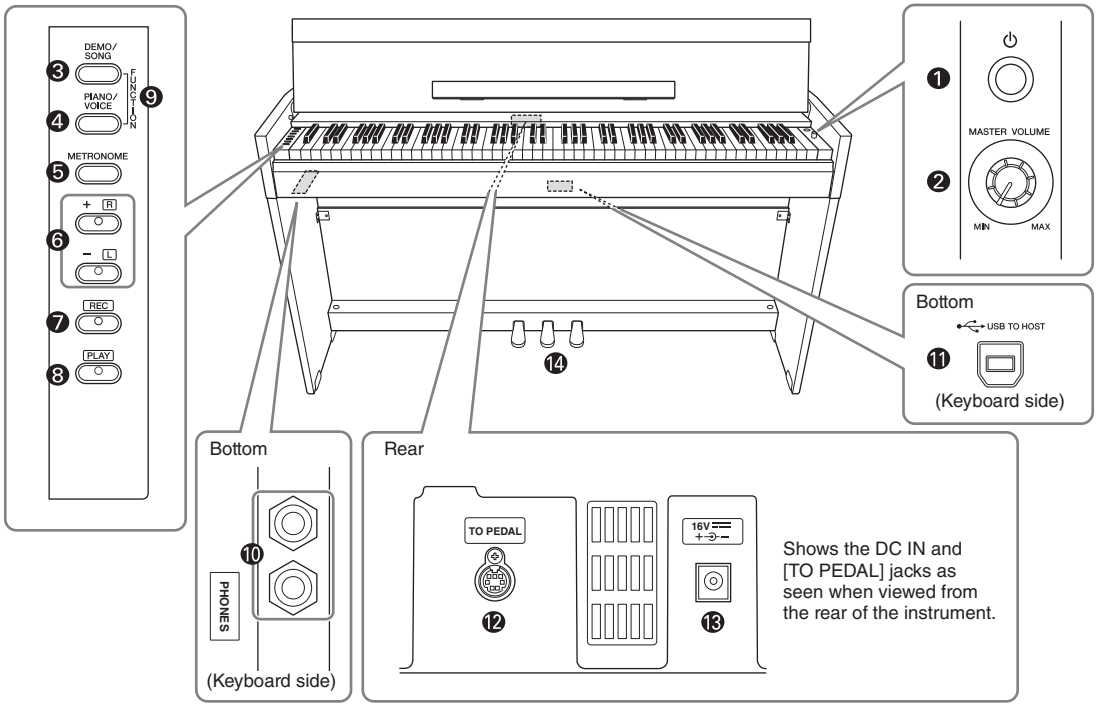

❶ [⏻] (Standby/On) switch
❷ [MASTER VOLUME] knob
❸ [DEMO/SONG] button
❹ [PIANO/VOICE] button
❺ [METRONOME] button
❻ [+R], [–L] buttons
❼ [REC] button
❽ [PLAY] button
❾ [FUNCTION]
❿ [PHONES] jacks
⓫ [USB TO HOST] terminal
⓬ [TO PEDAL] jack
⓭ DC IN jack
⓮ Pedals

■ DISASSEMBLY PROCEDURE

Caution:

- Be sure to attach the removed filament tape just as it was before removal.

1. SP Box Assembly (Time required: About 5 minutes)

1. Remove the fourteen (14) screws marked [S01A]. (Fig.1)
2. Loosen the two (2) screws marked [S01B] and slide the SP box assembly toward the left. The SP box assembly can then be removed in a downward direction. (Fig.1)

< Bottom View >

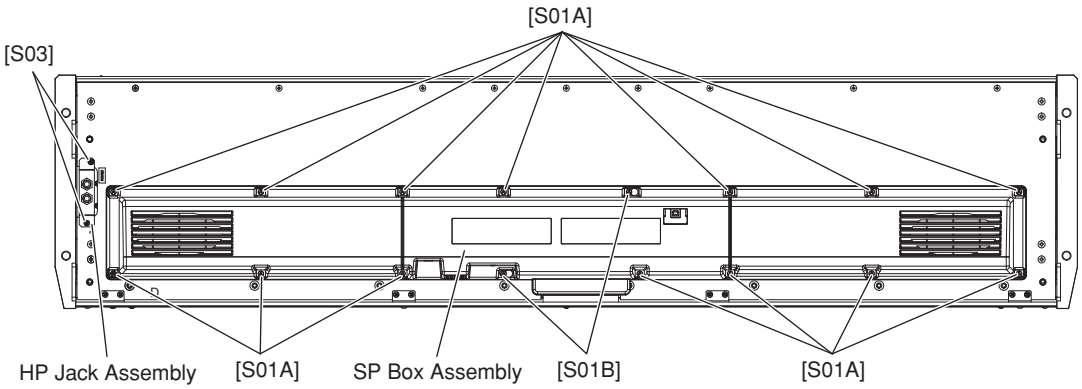

Fig.1

2. DM Circuit Board (Time required: About 1 minutes)

1. Remove the SP box assembly. (See procedure 1.)
2. Remove the four (4) screws marked [9A]. The DM circuit board can then be removed. (Fig.2)

* ***As for the screw marked [9A] at the location of "A", it is tightened together with a wire clip. (Fig.2)***

< Top View >

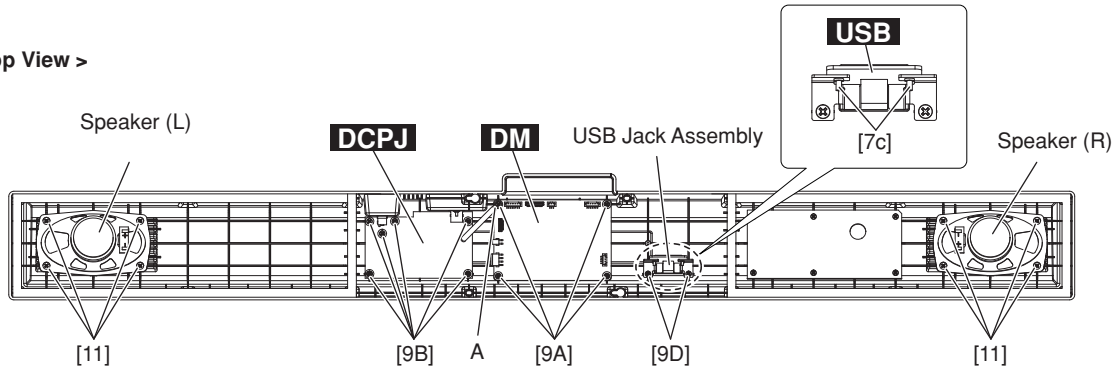

< Rear View >

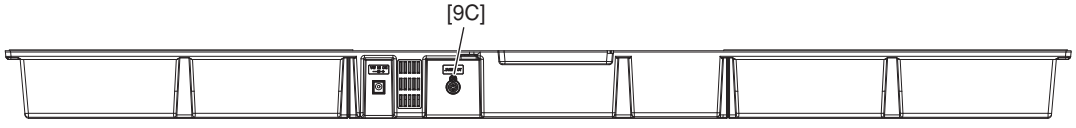

Fig.2

3. DCPJ Circuit Board (Time required: About 2 minutes)

1. Remove the SP box assembly. (See procedure 1.)
2. Remove the six (6) screws marked [9B], and remove the screws marked [9C] at the PEDAL jack section from the back side. The DCPJ circuit board can then be removed. (Fig.2)

4. USB Circuit Board (Time required: About 1 minutes)

1. Remove the SP box assembly. (See procedure 1.)
2. Remove the two (2) screws marked [9D]. The USB jack assembly can then be removed. (Fig.2)
3. Remove the two (2) screws marked [7C]. The USB circuit board can then be removed. (Fig.2)

5. Speaker(L, R) (Time required: About 2 minutes)

1. Remove the SP box assembly. (See procedure 1.)
2. Remove the four (4) screws marked [11]. The speaker can then be removed. (Fig.2)

* ***The speakers L and R can be removed in the same manner.***

6. Key cover assembly (Time required: About 1 minutes)

1. Remove the screw marked [S11]. (Fig.3)
2. Lift the key cover assembly so that it does not contact the arm assembly (R), and then slide it toward the right. The key cover assembly can then be removed.

* ***When removing the key cover assembly, be careful not to damage the damper fixture on the arm assembly (R).***

* ***When detaching the key cover assembly from the bearing assembly of the arm assembly (L), be careful not to let it contact the front board. The key cover assembly is heavy and can damage the front board if it comes into contact.***

< Front View >

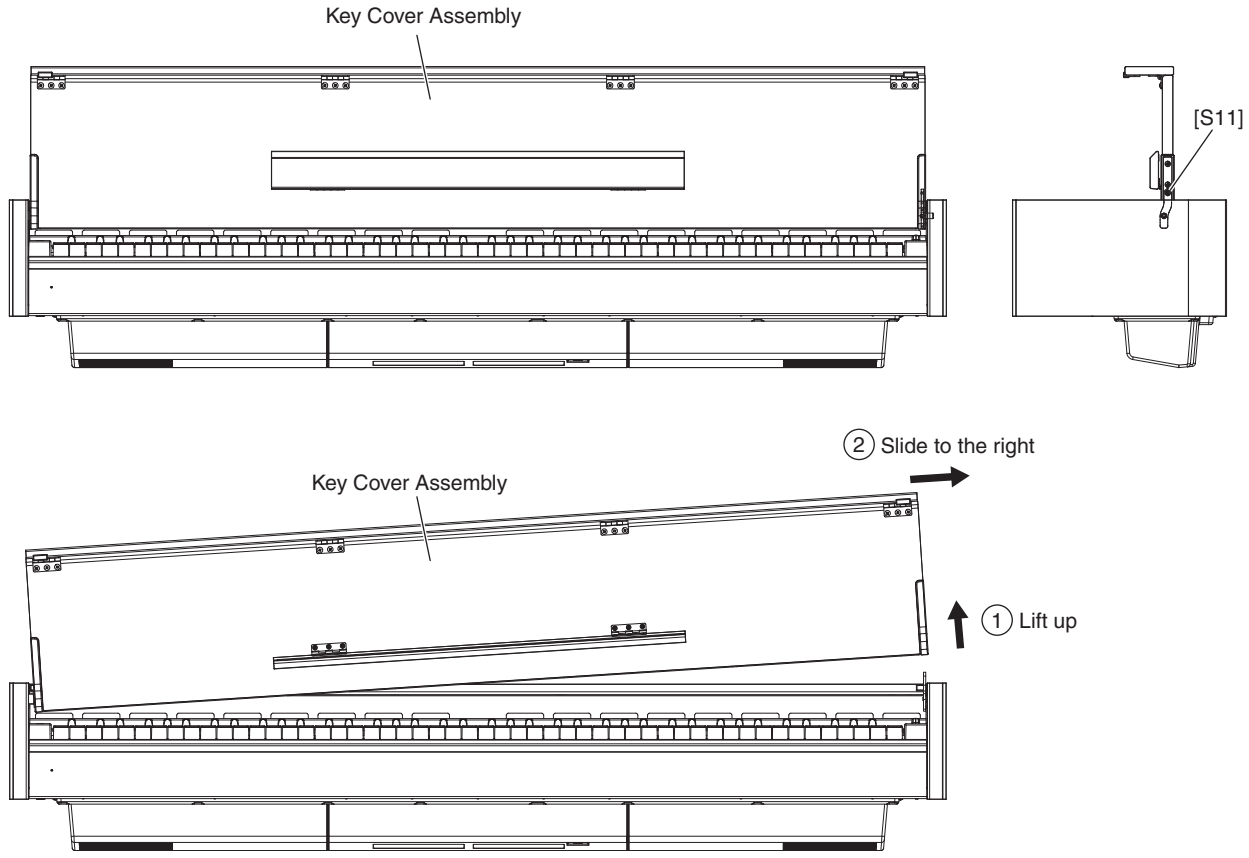

Fig.3

7. Top board assembly (Time required: About 1 minutes)

1. Remove the key cover assembly. (See procedure 6.)
2. Remove the three (3) screws marked [S02]. The top board assembly can then be removed. (Fig.4)

* ***When removing the top board assembly, be careful not to damage the damper fixture on the arm assembly (L).***

< Rear View >

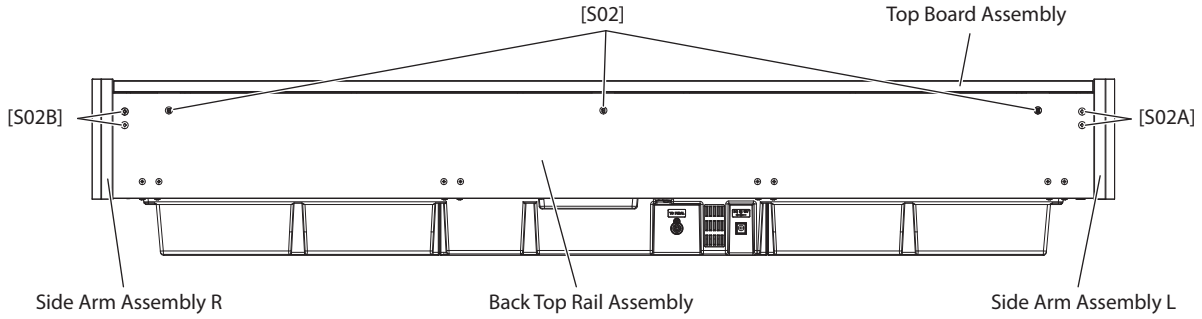

Fig.4

8. Key Block Assembly L (Time required: About 1 minutes)

1. Remove the key cover assembly. (See procedure 6.)
2. Remove the top board assembly. (See procedure 7.)
3. Remove the screw marked [S08A]. The key block assembly L can then be removed. (Fig.5)

* ***When removing the key block assembly (L), be careful not to damage the damper fixture on the arm assembly (L).***

< Top View >

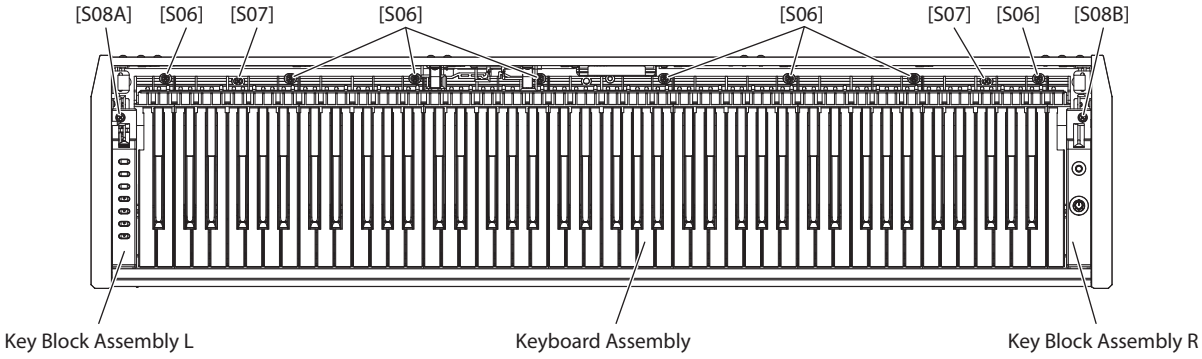

Fig.5

9. Key Block Assembly R (Time required: About 1 minutes)

1. Remove the key cover assembly. (See procedure 6.)
2. Remove the top board assembly. (See procedure 7.)
3. Remove the screw marked [S08B]. The key block assembly R can then be removed. (Fig.5)

10. PNL Circuit Board (Time required: About 2 minutes)

1. Remove the key cover assembly. (See procedure 6.)
2. Remove the top board assembly. (See procedure 7.)
3. Remove the key block assembly L. (See procedure 8.)
4. Remove the six (6) screws marked [6]. The PNL circuit board can then be removed. (Fig.6)

< Bottom View >

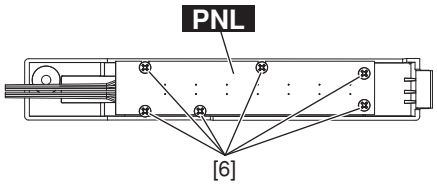

Fig.6

11. PNR Circuit Board (Time required: About 2 minutes)

1. Remove the key cover assembly. (See procedure 6.)
2. Remove the top board assembly. (See procedure 7.)
3. Remove the key block assembly R. (See procedure 9.)
4. Remove the MASTER VOLUME knob from the key block assembly R. (Fig.7)
5. Remove the five (5) screws marked [6]. The PNR circuit board can then be removed. (Fig.7)

< Top View >

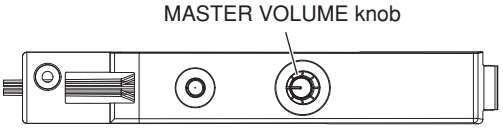

< Bottom View >

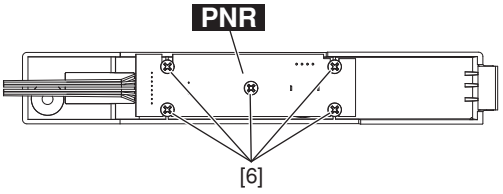

Fig.7

12. HP Jack Assembly (Time required: About 1 minutes)

1. Remove the key cover assembly. (See procedure 6.)
2. Remove the top board assembly. (See procedure 7.)
3. Remove the key block assembly L. (See procedure 8.)
4. Remove the two (2) screws marked [S03] from the bottom surface of the key bed, and remove the GND wire connecting screw from the key block assembly side of the key bed. The HP jack assembly can then be removed. (Fig.1, Fig.5)

* ***When removing the HP jack assembly, be careful not to allow HP circuit board parts to catch and pull the wire PL connected to the arm assembly (L).***

13. HP Circuit Board (Time required: About 1 minutes)

1. Remove the key cover assembly. (See procedure 6.)
2. Remove the top board assembly. (See procedure 7.)
3. Remove the key block assembly L. (See procedure 8.)
4. Remove the HP jack assembly. (See procedure 12.)
5. Remove the two (2) hexagonal nuts. The HP circuit board can then be removed. (Fig.8)

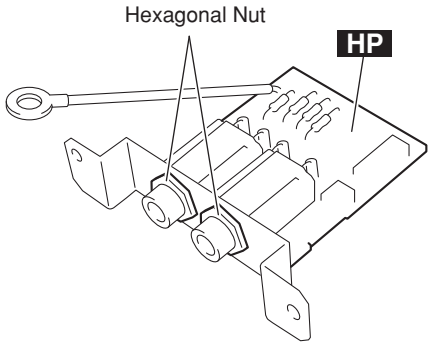

Fig.8

14. Keyboard Assembly (Time required: About 7 minutes)

1. Remove the key cover assembly. (See procedure 6.)
2. Remove the top board assembly. (See procedure 7.)
3. Remove the key block assembly L. (See procedure 8.)
4. Remove the key block assembly R. (See procedure 9.)
5. Remove the two (2) screws from the wire cover. The wire cover can then be removed.
6. Remove the eight (8) screws marked [S06] and the two (2) screws marked [S07]. The keyboard assembly can then be removed. (Fig.5)

* ***Carefully tighten the screws to fix the wire cover. Note that the screw heads and threads can be easily damaged.***

15. PL Circuit Board (Time required: About 1 minutes)

1. Remove the key cover assembly. (See procedure 6.)
2. Remove the top board assembly. (See procedure 7.)
3. Remove the key block assembly L. (See procedure 8.)
4. Remove the key block assembly R. (See procedure 9.)
5. Remove the keyboard assembly. (See procedure 14.)
6. Remove the screw marked [10]. The PL circuit board can then be removed. (Photo.1)

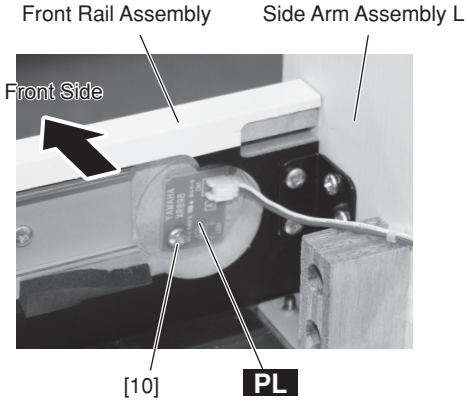

Photo.1

16. Front Rail Assembly (Time required: About 8 minutes)

1. Remove the key cover assembly. (See procedure 6.)
2. Remove the top board assembly. (See procedure 7.)
3. Remove the key block assembly L. (See procedure 8.)
4. Remove the key block assembly R. (See procedure 9.)
5. Remove the keyboard assembly. (See procedure 14.)
6. Remove the four (4) pieces of conductive adhesive tape. (Fig.5)
7. Remove the four (4) screws marked [S01] which hold the arm assemblies (L, R) in place, and remove the nine (9) screws marked [S05] which hold the key bed inplace. The front rail assembly can then be removed. (Fig.9)

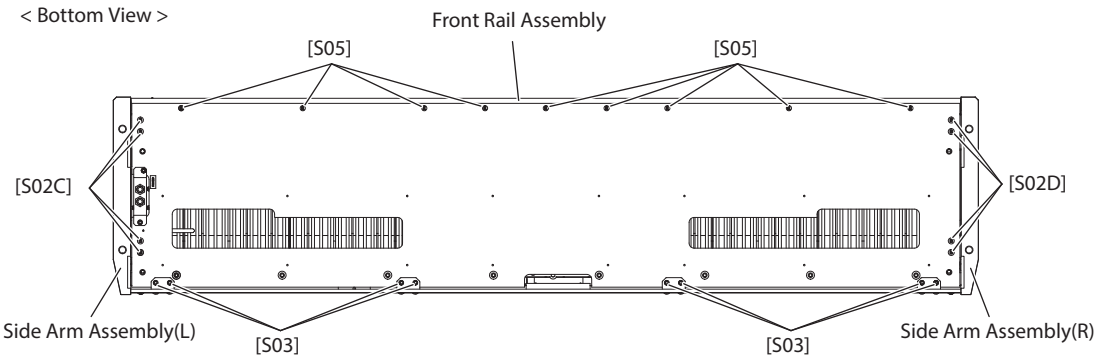

< Side View >

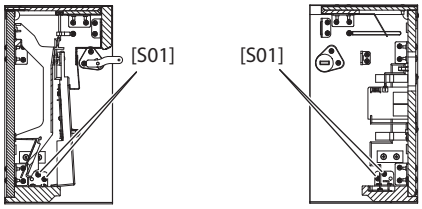

Fig.9

17. Back Top Board Assembly (Time required: About 3 minutes)

1. Remove the key cover assembly. (procedure 6.)
2. Remove the top board assembly. (procedure 7.)
3. Remove the two (2) screws from the wire cover. The wire cover can then be removed.
4. Remove the two (2) screws from the RELAY circuit board. The RELAY circuit board can then be removed.
5. Detach the wires from the cord binders.
6. Remove the two (2) screws marked [S02A], the two (2) screws marked [S02B] and the eight (8) screws marked [S03]. The back top board assembly can then be removed. (Fig.4, Fig.9)

18. Arm Assembly (L, R) (Time required: About 3 minutes each)

1. Remove the key cover assembly. (See procedure 6.)
2. Remove the top board assembly. (See procedure 7.)
3. Remove the key block assembly L. (See procedure 8.)
4. Remove the key block assembly R. (See procedure 9.)
5. Remove the keyboard assembly. (See procedure 14.)
6. Remove the two (2) screws marked [S02A], the four (4) screws marked [S02C] and two (2) screws marked [S01]. The arm assembly L can then be removed. (Fig.4,Fig.9)

* ***The arm assembly R can then be removed in the same manner. (Fig.4, Fig.9)***

* ***Use the wire clip to secure the key bed side of the insulation lock tie in place during reinstallation. (Photo.2)***

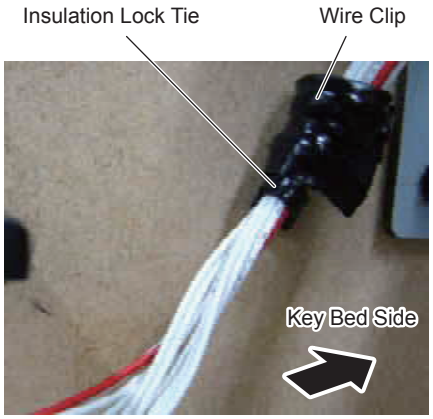

Photo.2

19. Side Board Assembly (L, R) (Time required: About 5 minutes each)

1. Unplug the wire harness PK-LF from the [TO PEDAL] terminal. (Fig.10)
2. Remove the four (4) screws marked [6c], and detach the two (2) cord clamp from the wire harness PK-LF. The main unit can then be removed. (Fig.10)

   Place a soft cloth such as a blanket on the floor, and set the digital piano on it, with the keyboard side facing up.

Caution:

- For safety, this procedure should be performed by two persons.

3. Remove the four (4) screws marked [6a], the two (2) screws marked [6b] and the two (2) screws marked [6d]. The rear panel can then be removed. (Fig.11)
4. While holding the side board to prevent it from falling, remove the cap and the screw marked [6e]. The side board assembly (L) can then be removed. (Fig.11)

* ***The side board assembly R can then be removed in the same manner. (Fig.10, Fig.11)***

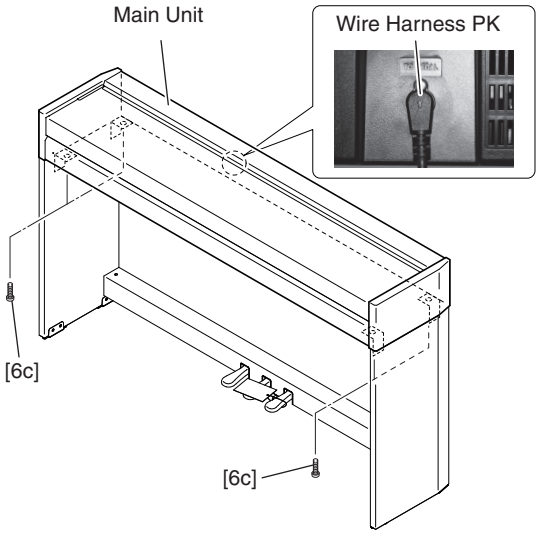

Fig.10

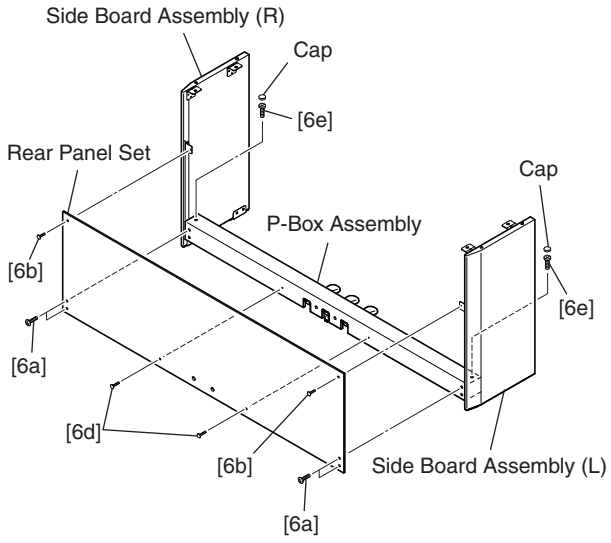

Fig.11

20. P-BOX Assembly (Time required: About 4 minutes)

1. Unplug the wire harness PK-LF from the [TO PEDAL] terminal, then remove the cord clamp from the wire harness PK-LF. (Fig.10)
2. Remove the four (4) screws marked [6a], the two (2) screws marked [6b] and the two (2) screws marked [6d]. The rear panel can then be removed. (Fig.11)
3. Remove the two (2) caps and the two (2) screws marked [6e] from the left and right sides. Slightly move the sections below the side boards toward the outside to widen. The P-Box assembly can then be removed by lifting and moving toward the back. (Fig.11)

* ***After removing the P-Box assembly, mount the rear panel temporarily using the screws marked [6a] and [6b] to prevent the side boards and main digital piano body from becoming unstable.***

21. Pedal Assembly (Time required: About 2 minutes)

1. Remove the P-BOX assembly. (See procedure 20.)
2. Remove the six (6) screws marked [4] and the two (2) screws marked [3]. The pedal assembly can then be removed. (Fig.12)

< Bottom View >

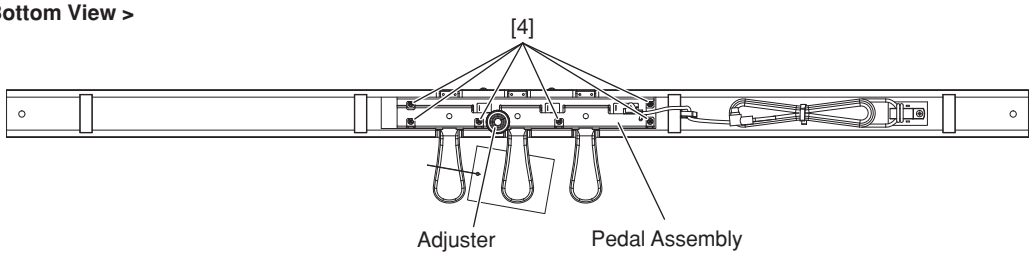

< Rear View >

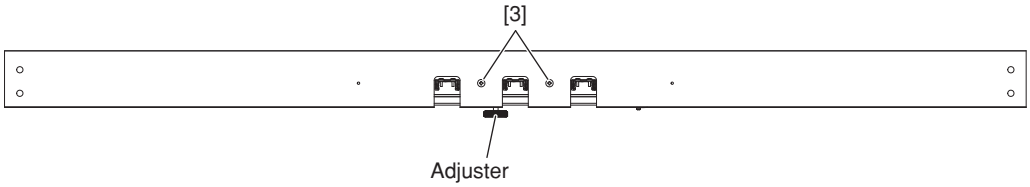

Fig.12

22. PEDAL Circuit Board (Time required: About 7 minutes)

1. Remove the P-BOX assembly. (See procedure 20.)
2. Remove the pedal assembly. (See procedure 21.)
3. Remove the adjuster. (Fig.12)
4. Remove the three (3) screws marked [80A]. The three (3) pedal guides can then be removed as shown in Fig.14. (Fig.13, Fig.14)
5. Remove the six (6) screws marked [80B]. Push down the pedal (damper) and then draw it forward. (Fig.13, Fig.14)
6. Straighten the three (3) bent frame portions marked "A". The PEDAL circuit board can then be removed. (Fig.15)
7. Pull out the actuator pedal from the PEDAL circuit board. (Fig.15)

* ***The actuator pedal is not part of the PEDAL circuit board. Install it to the new circuit board when replacing the PEDAL circuit board.***

< Top View >

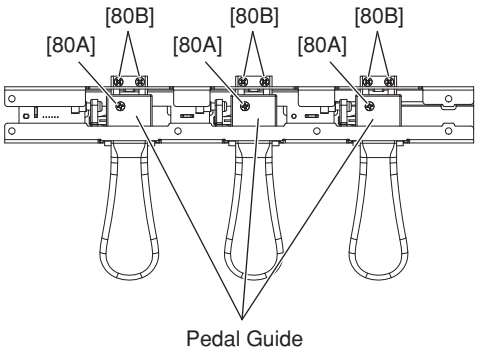

Fig.13

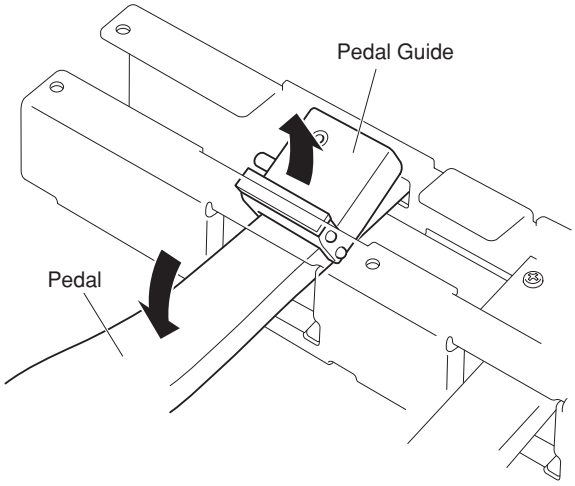

Fig.14

< Top View >

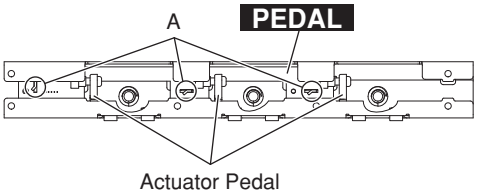

Fig.15

23. Disassembling the Keyboard

* ***After inserting a round stick (Rod: TX000671) between the frame and the keys, remove the circuit boards. (Fig.16)***

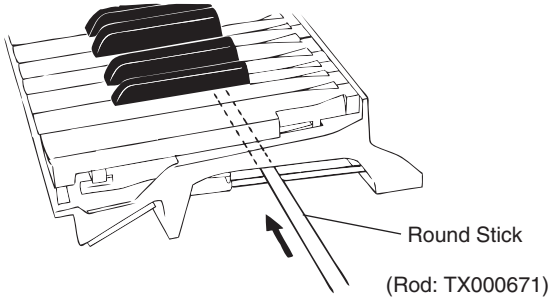

Fig.16

- GHD EBUS L Circuit Board, MK SUB Circuit Board

  1. Remove the seven (7) screws marked [260A]. The GHD EBUS L and MK SUB circuit boards can then beremoved. (Fig.17, Photo.3)

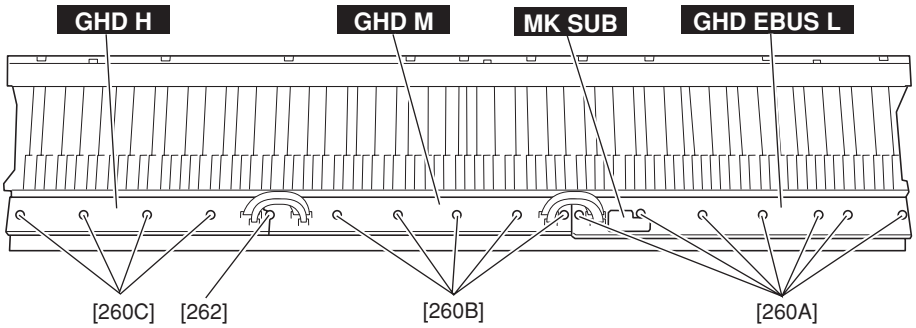

Fig.17

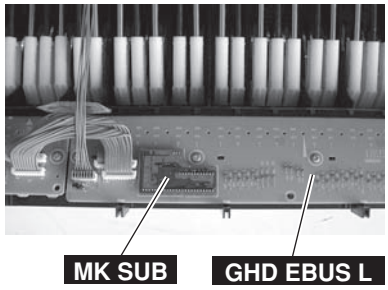

Photo.3

- GHD M Circuit Board

  1. Remove the five (5) screws marked [260B] and the screw marked [262]. The GHD M circuit board can then be removed. (Fig.17)

- GHD H Circuit Board

  1. Remove the four (4) screws marked [260C] and the screw marked [262]. The GHD H circuit board can then be removed. (Fig.17)

* ***Keys can be removed without removing the circuit boards.***

- Rubber Contact

1. Remove the GHD circuit board for the involved key. The rubber contacts can then be removed. (Photo.4, Photo.5)

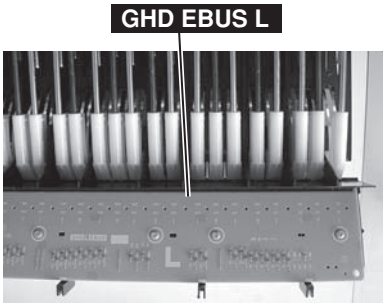

Photo.4

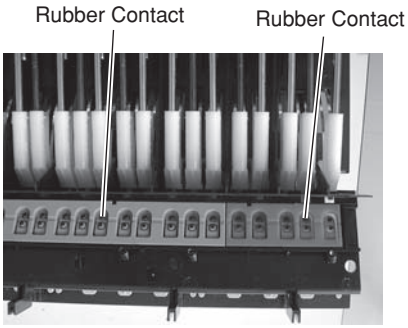

Photo.5

- White key

1. In order to release the white key from the stopper, insert a thin plate between the white keys (gap in the direction indicated by the triangle mark, near the fulcrum of the key), press down the stopper marked "B" and move the white key forward. Then the white key being released from the stopper lifts up. (Fig.18, Fig.19)

* ***Use special care not to move the white key forward so much as to cause damage to the key spring.***

2. In this state, move the white key rearward a little. Then the white key can be removed. (Fig.19)

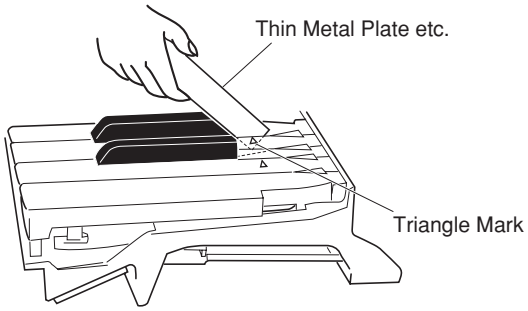

Fig.18

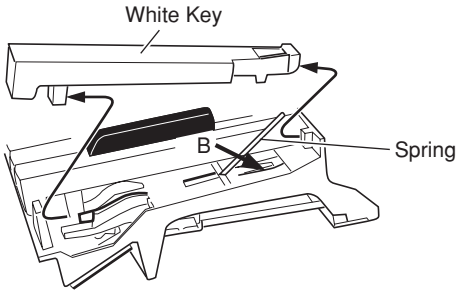

Fig.19

- Black key

1. The black key can be removed after the white keys on either side have been removed.

- Hammer, White Key
  1. After a key has been removed, push a key spring down once to take it out of the hook. (Fig.20)
  2. Place the keyboard assembly upside-down and peel the stopper (L88_W) away. The hammer of the white key can then be removed. (Fig.21)

* ***The hammer of the black key can then be removed in the same manner.***

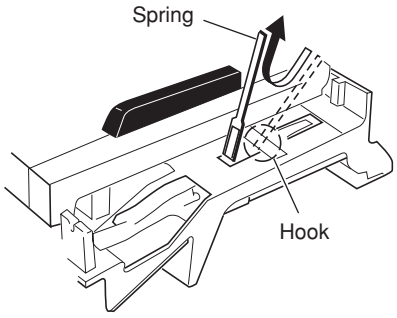

Fig.20

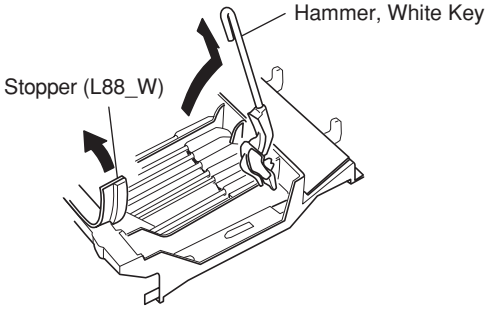

Fig.21

24. Assembling the Keyboard

- Hammer, White Key (Hammer, Black Key)

1. Place the keyboard assembly upside-down, insert a hammer assembly into the frame, and put the stopper (L88_W) on. (Fig.22)

* ***There are four (4) kinds of hammers that differ in weight.***

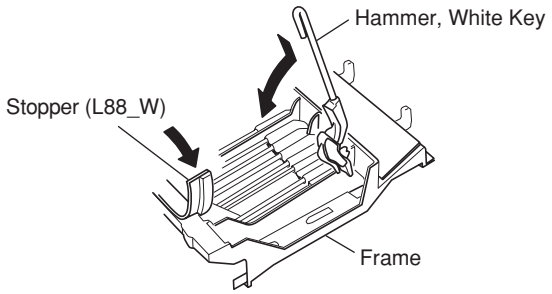

Fig.22

- Spring

1. Place the keyboard assembly right side up. Fix key springs on the frame by setting one at each slit and pushing down once on each key spring. (Fig.23)

* ***Be careful of the direction of the spring. It should be installed with its projecting end facing upward. (Fig.24)***

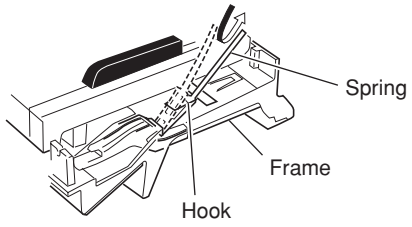

Fig.23

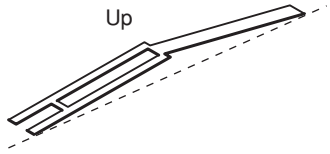

Fig.24

- Assembling the White Key (Black Key)

1. After a key has been fit to part "D" and key guide, make sure that the spring is fixed to the key and then press down part "C" of the key. (Fig.25)

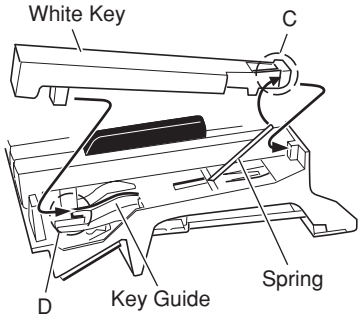

Fig.25

- GHD EBUS L Circuit Board, MK SUB Circuit Board

1. Tighten the seven (7) screws marked [260A] to fix the GHD EBUS L, MK SUB circuit boards. (Fig.17)

- GHD M Circuit Board
  1. Tighten the five (5) screws marked [260B] and the screw marked [262] to fix the GHD M circuit board. (Fig.17)
- GHD H Circuit Board
  1. Tighten the four (4) screws marked [260C] and the screw marked [262] to fix the GHD H circuit board. (Fig.17)

* ***When installing the circuit boards, set it under hooks to align the triangle marks of the circuit board and projection parts of the frame as shown in Fig.26.***

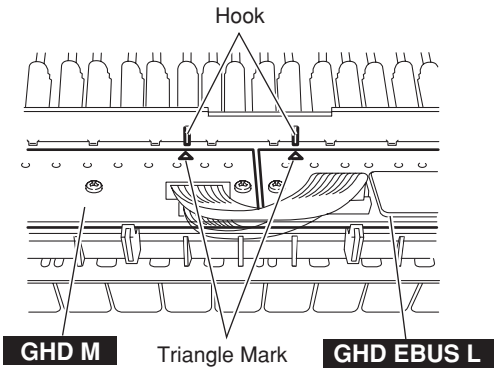

Fig.26

■ CIRCUIT BOARDS

CONTENTS

DCPJ Circuit Board (YE107D0) 21
DM Circuit Board (YD988D0) 22
GHD EBUS L Circuit Board (XZ138D0) 23
GHD H Circuit Board (X2218A0) 24
GHD M Circuit Board (X2217A0) 25
HP Circuit Board (XQ389C0, XQ390A0)/PL Circuit Board (XR898A0) 26
MK SUB Circuit Board (XZ142B0) 27
PEDAL Circuit Board (YD982B0) 28
PNL Circuit Board (YE108C0) 29
PNR Circuit Borad (YE108C0) 29
RELAY Circuit Board (YE107D0) 29
USB Circuit Board (YE107D0) 29

● **DCPJ Circuit Board (YE107D0)**

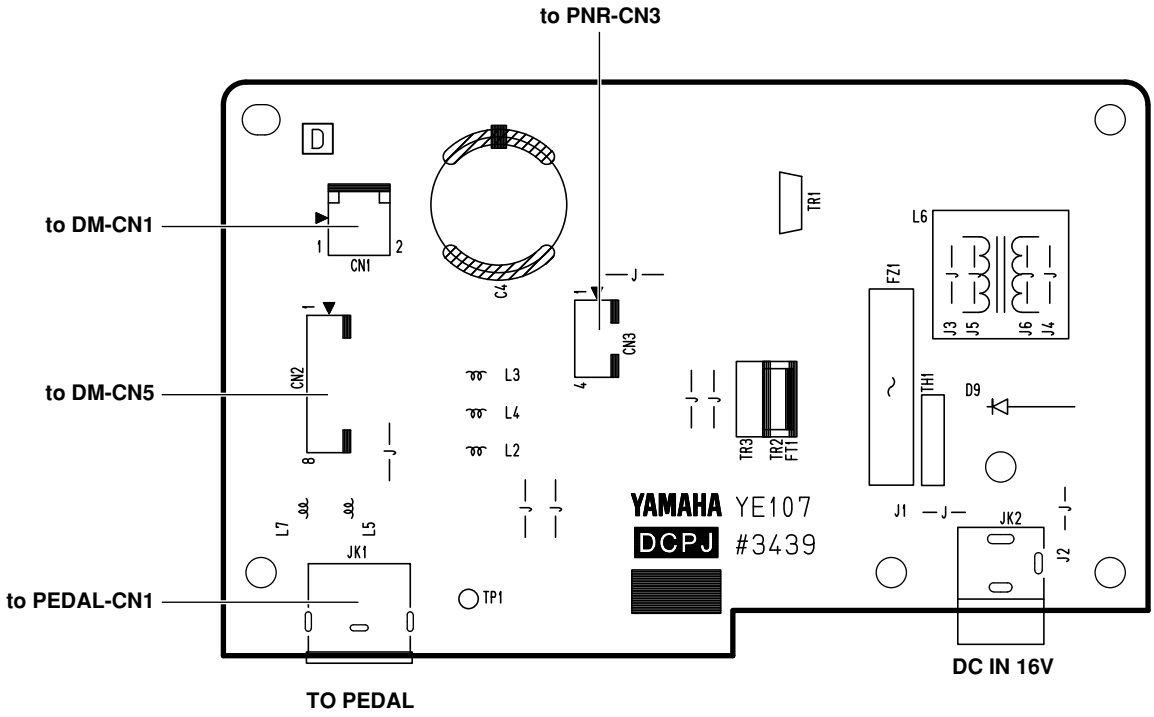

Component side

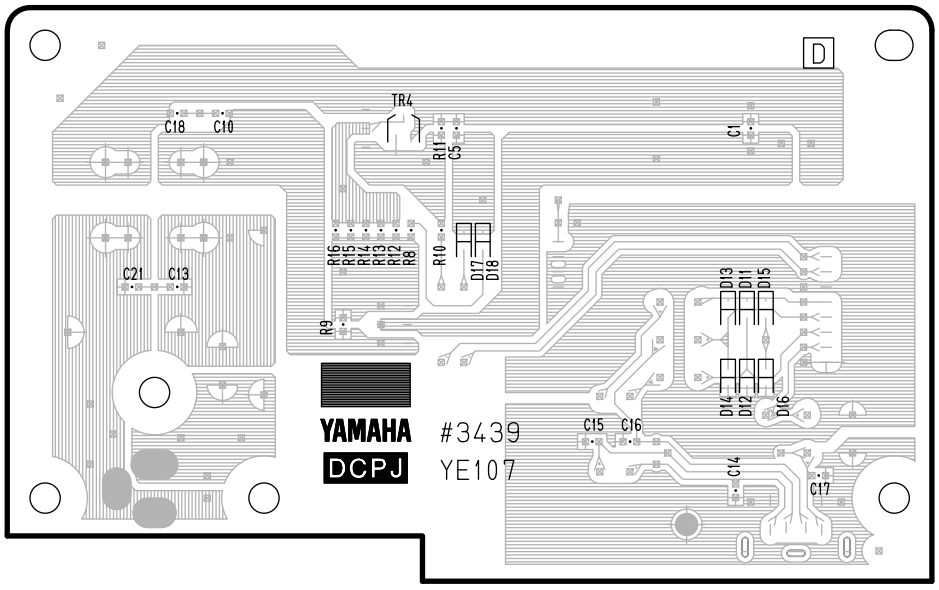

Pattern side

2NA-ZA38000 ⚠3

● DM Circuit Board (YD988D0)

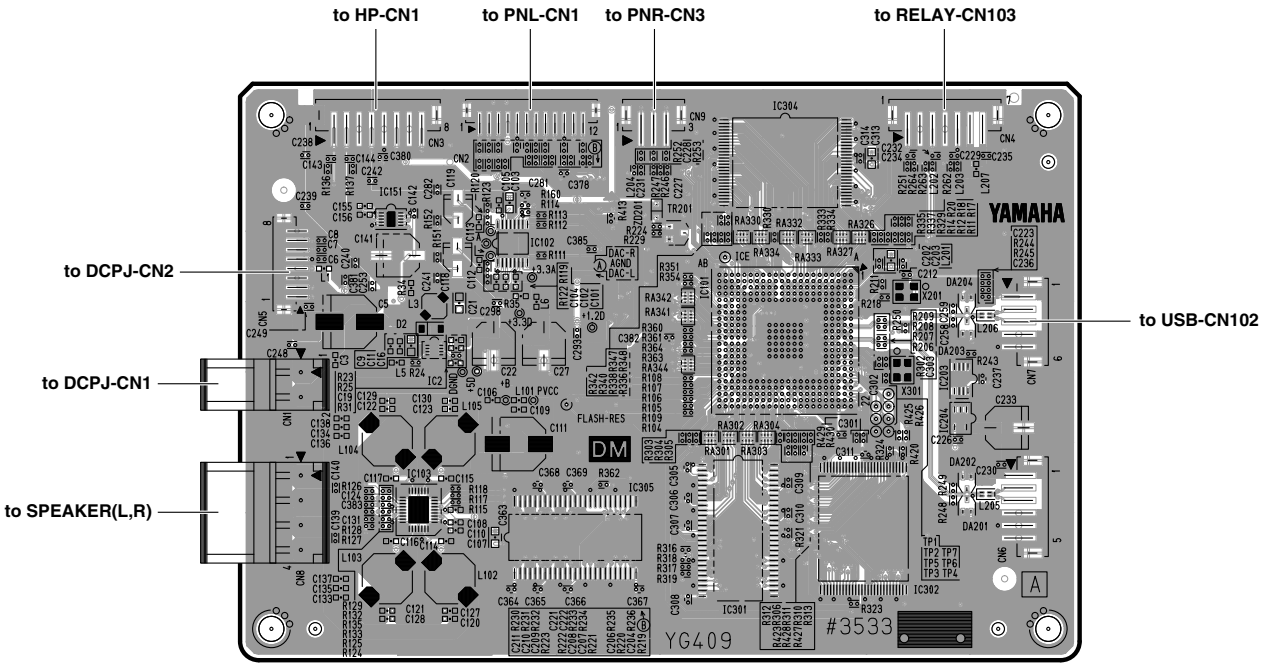

Component side

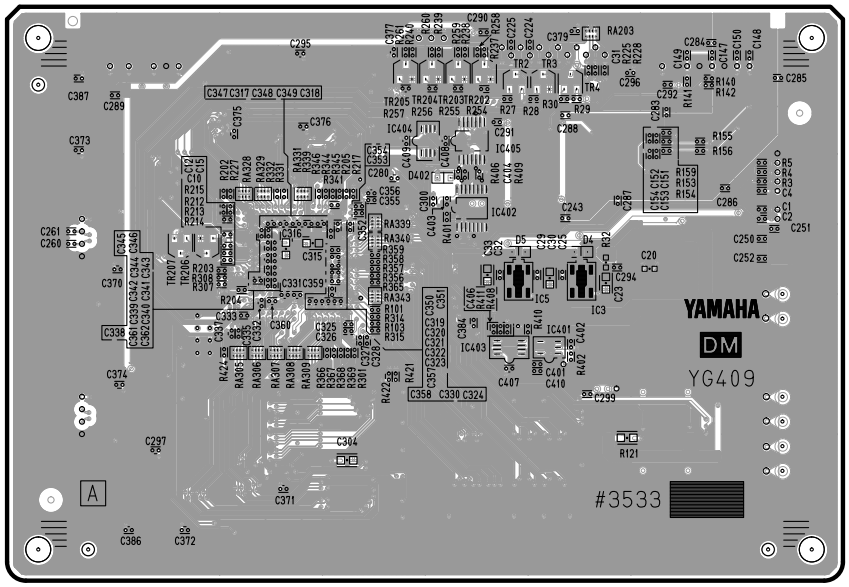

Pattern side

2NA-ZM36110 ⚠1

● **GHD EBUS L Circuit Board (XZ138D0)**

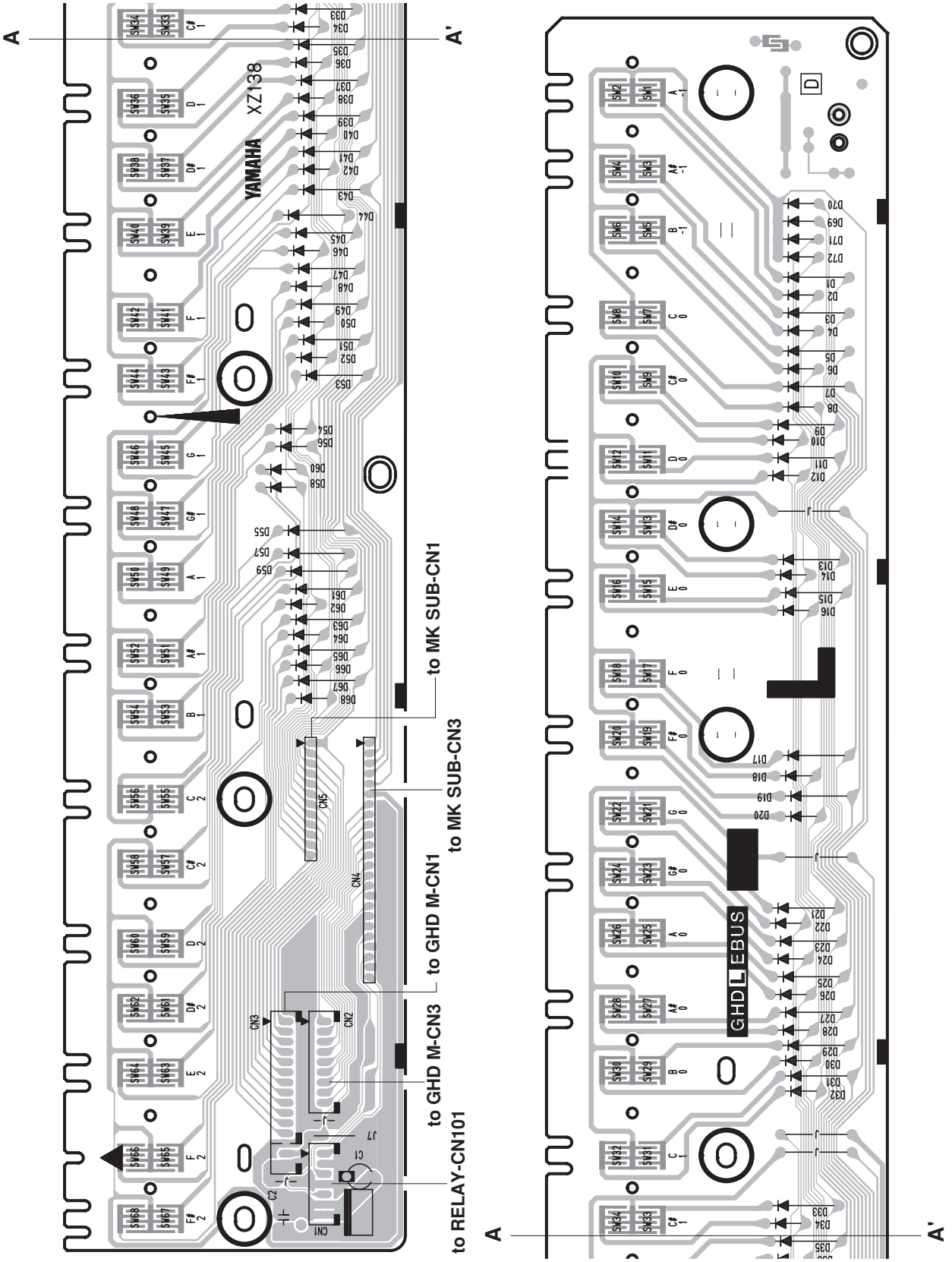

Component side

2NAK8-V646930

● **GHD H Circuit Board (X2218A0)**

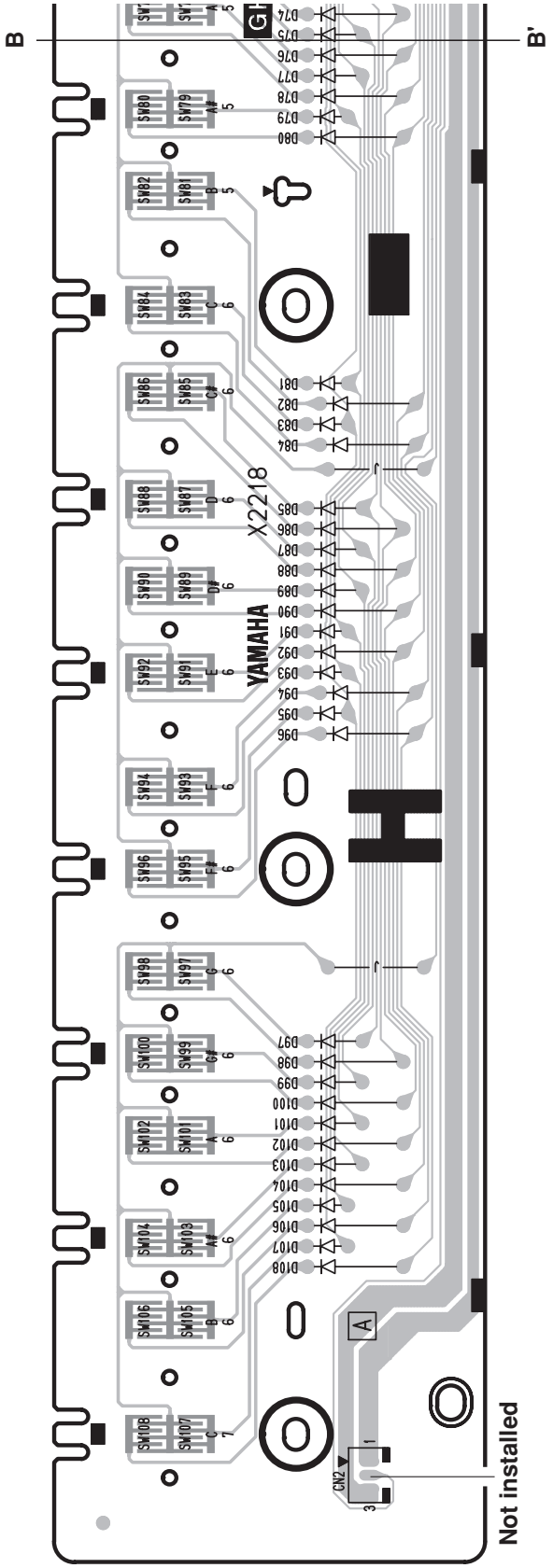

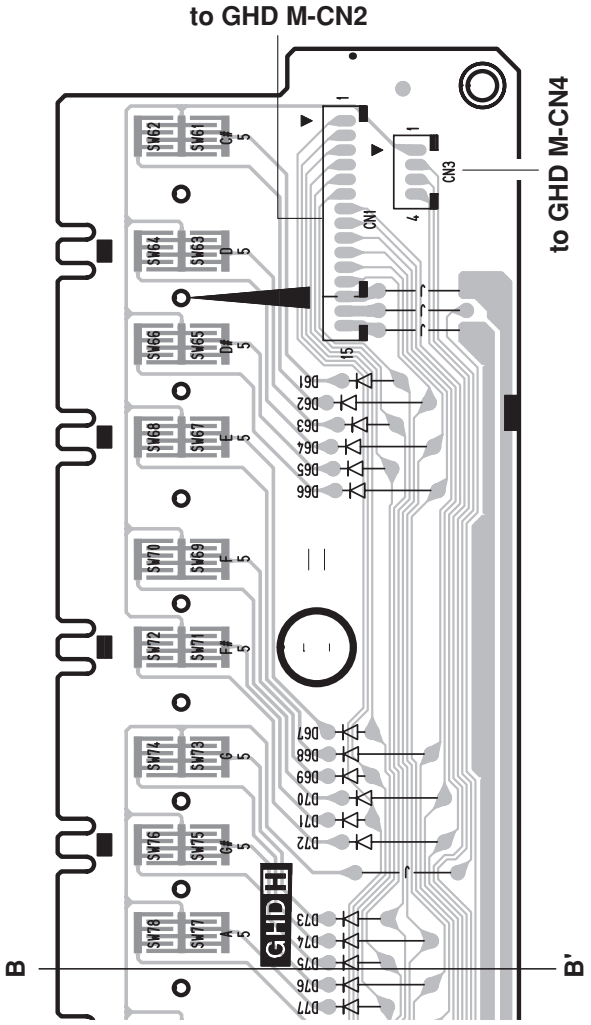

Component side

2NAK8-V852150

● **GHD M Circuit Board (X2217A0)**

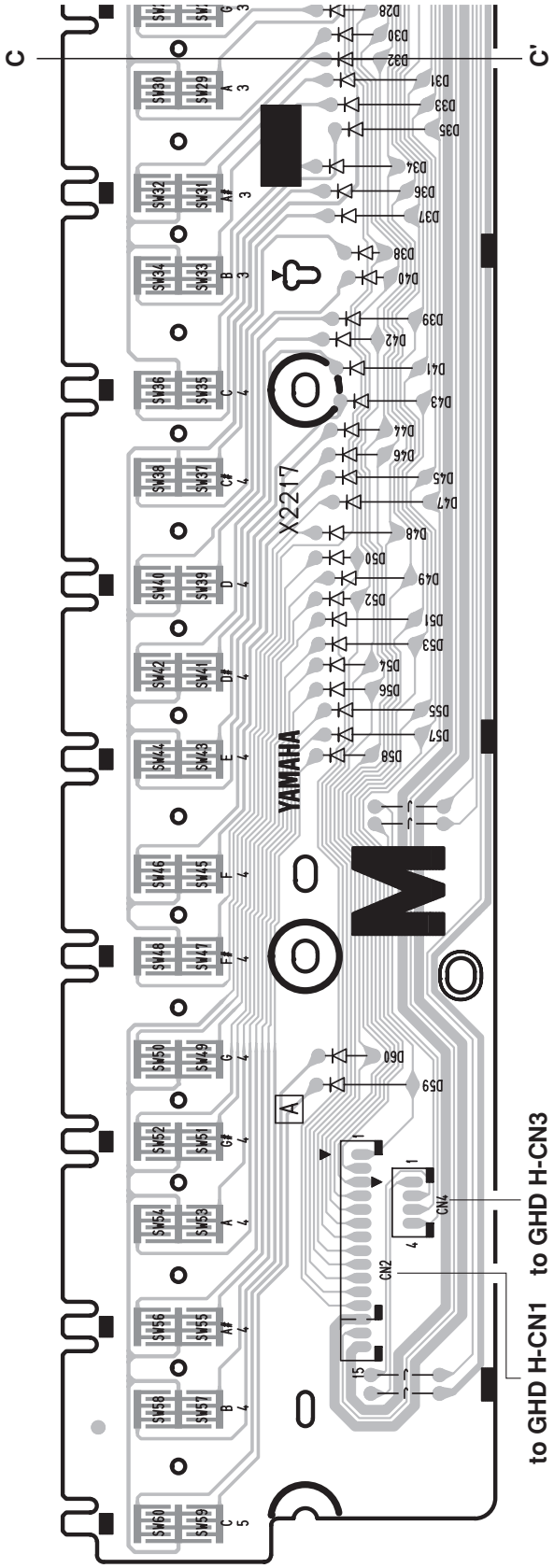

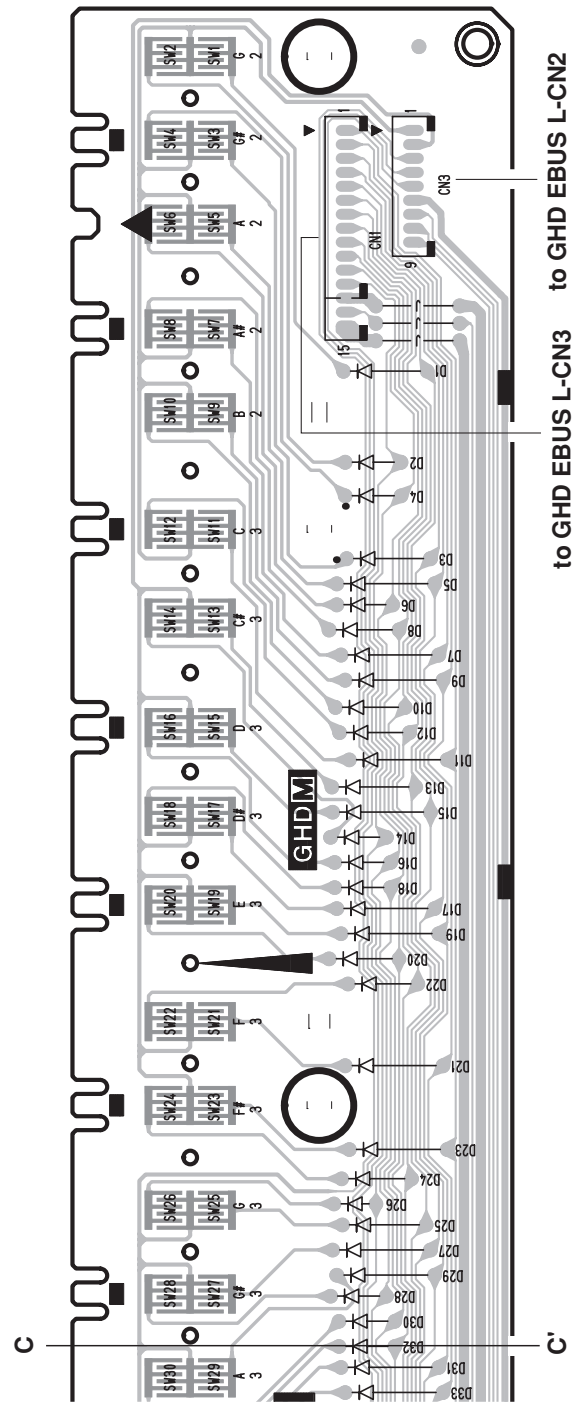

Component side

2NAK8-V852140

● **HP Circuit Board (XQ389C0, XQ390A0)/PL Circuit Board (XR898A0)**

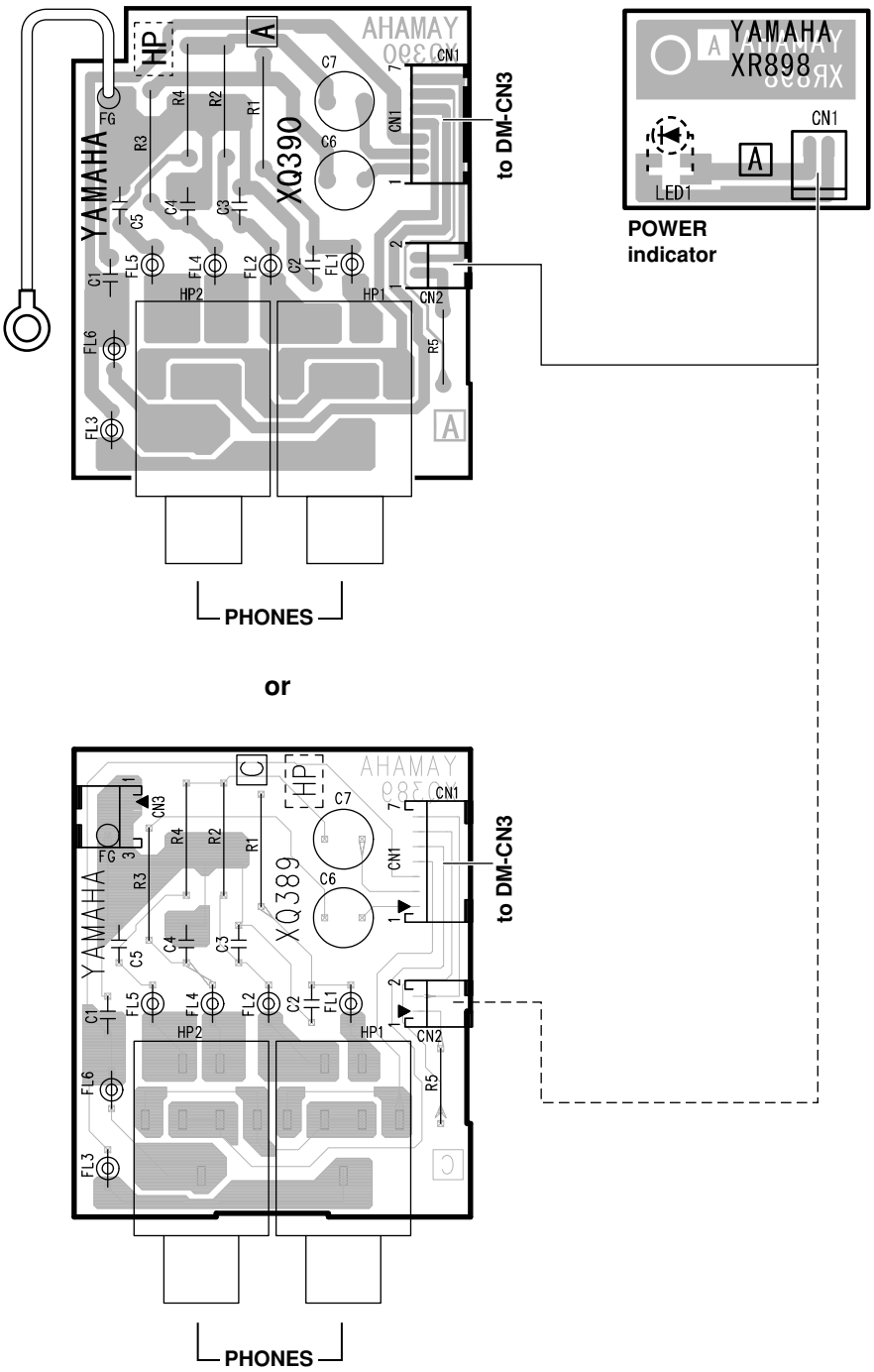

Pattern side

HP: 2NA-WV24780 ⚠4

2NA-ZN11200

PL: 2NA-VN63740

● **MK SUB Circuit Board (XZ142B0)**

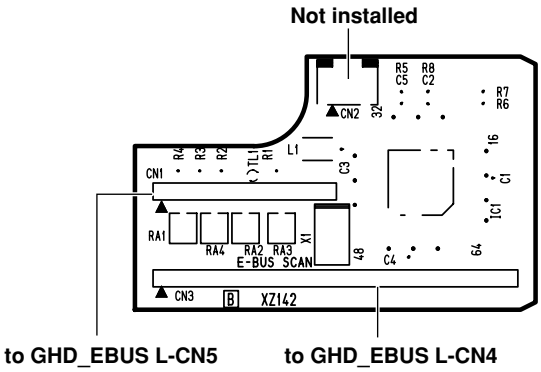

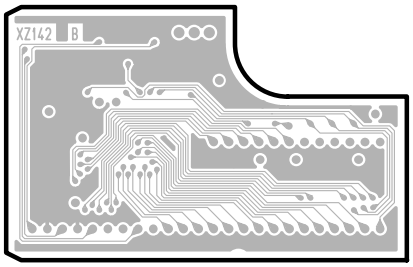

Component side / Pattern side

2NA-V658810

● PEDAL Circuit Board (YD982B0)

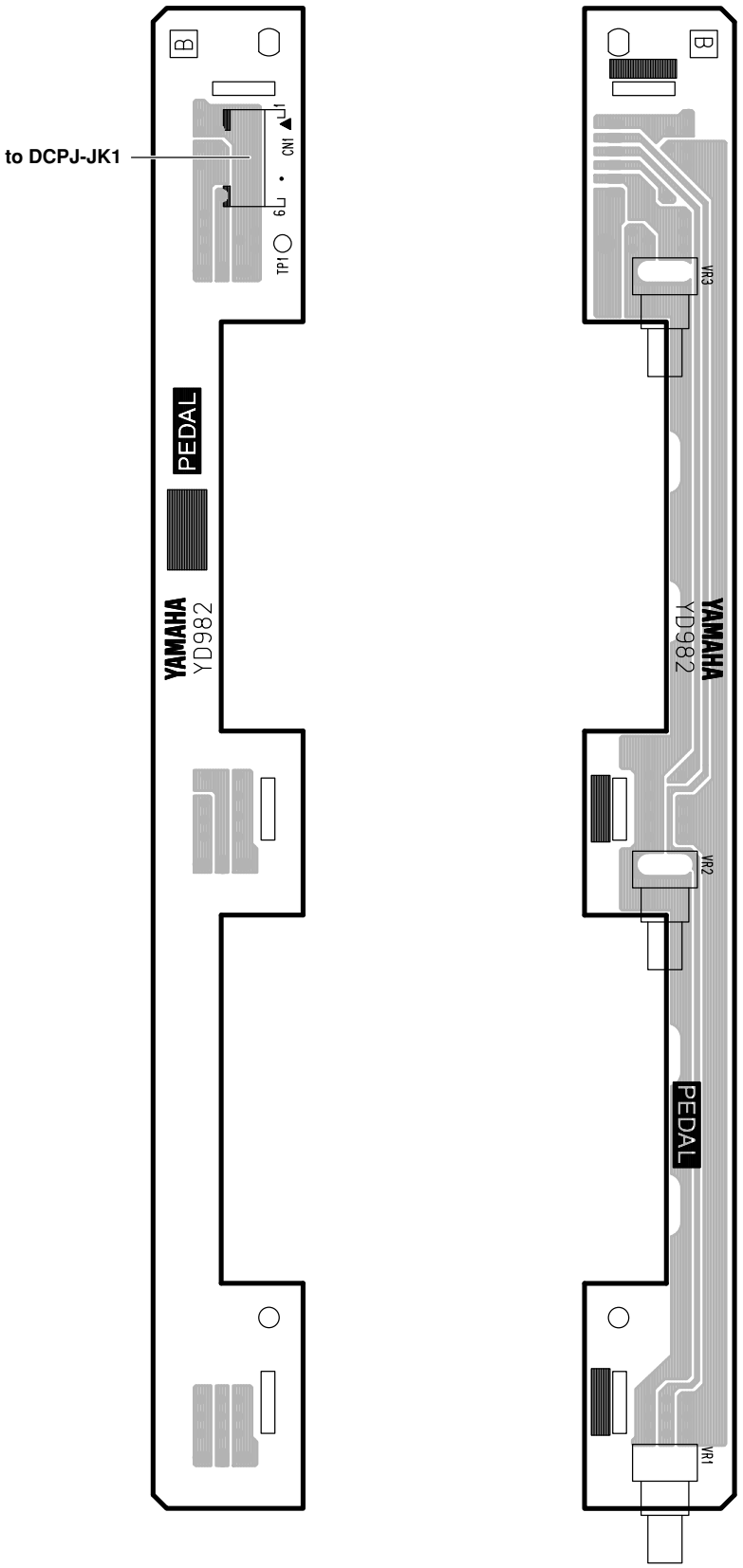

Component side / Pattern side

2NA-WZ72500 /1

● **PNL Circuit Board (YE108C0)**

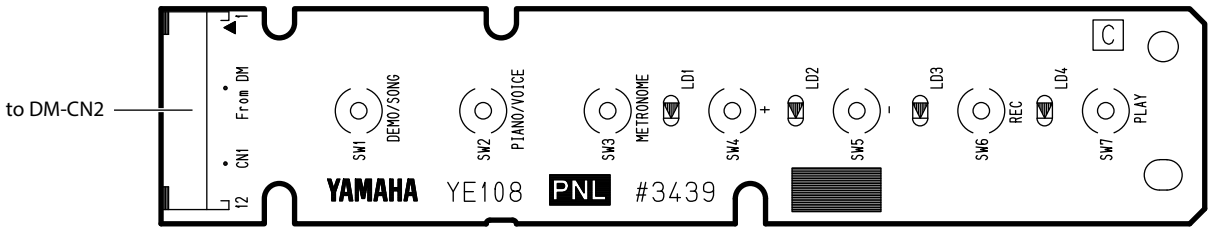

Component side

2NA-ZA50220

● **PNR Circuit Borad (YE108C0)**

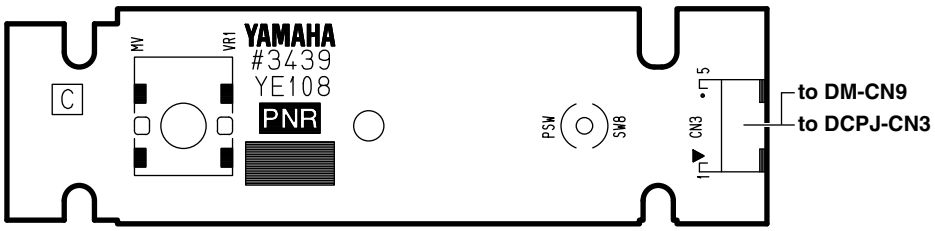

Pattern side

2NA-ZA50220

● **RELAY Circuit Board (YE107D0)**

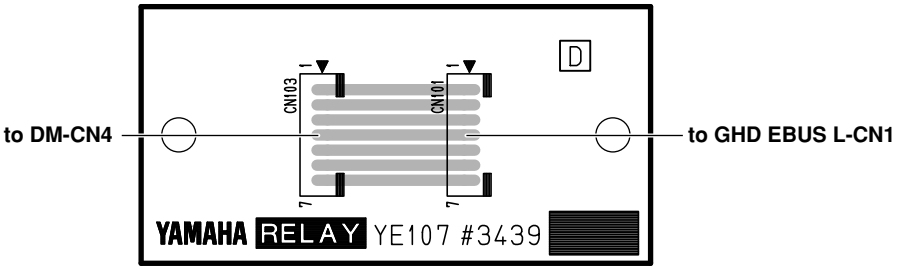

Component side

2NA-ZA38000 △3

● **USB Circuit Board (YE107D0)**

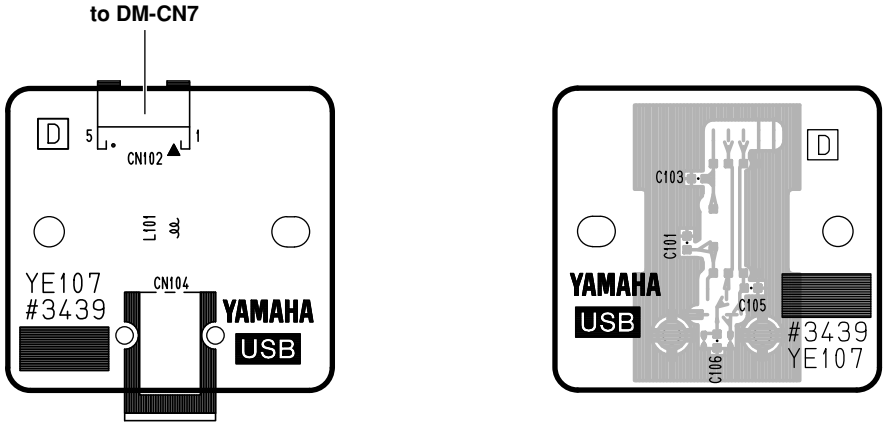

Component side / Pattern side

2NA-ZA38000 △3

DM Circuit Board Test Method

The DM Circuit Board is provided with test points for service check purposes.

Check the test points on the DMLCD Circuit Board if the following symptoms appear.

Symptoms and check items

1. No LCD display with Power SW ON --> Check items 1 to 8 sequentially
2. No sound or distorted sound --> Check items 1, 2, 4, 6, 9 and 10, and OUTPUT check items.

Test Point

NO.	Test Point	Circuit	Judgment criteria	Measured by	Parts with possible defects
①	+B	Power supply for DM circuit board	More than 14.0V	Multimeter	TR2 or TH1(On DCPJ Cirtcuit Board)
②	PVCC	Power supply for Power Amplifier	More than 14.0V	Multimeter	L101
③	+5D	5V power for digital circuits	5.0V±0.2V	Multimeter	IC2
④	+3.3D	3.3V power for digital circuits	3.3V±0.1V	Multimeter	IC3
⑤	+3.3A	3.3V power for analog circuits	3.3V±0.1V with AGND	Multimeter	IC3 or L6
⑥	+1.2D	1.2V power for digital circuits	1.2V±0.1V	Multimeter	IC5
⑦	FLASH-RES	CPU & memory reset signal	3.3V±0.3V	Multimeter	IC401
⑧	DAC-R	DAC output, L channel	There shall be audio output without distortion.	Signal Checker	IC101 or IC102
⑨	DAC-L	DAC output, R channel	There shall be audio output without distortion.	Signal Checker	IC101 or IC102

* Use the standard AC adapter PA-300C for check operation.

* It measures by opposite DGND except special notes.

Output

NO.	SPEAKER OUTPUT	PHONES/OUTPUT	DAC-L/R TEST POINT	Parts with possible defects
1	×	×	×	IC101
2	×	×	○	IC101 or Error Detect
3	○	×	×	IC102
4	×	○	○	IC101, IC103 or HP JACK
5	○	×	○	IC151 or HP JACK

* "○" mark expresses normalcy and "×" mark expresses a failed state.

DM Circuit Board (ZA501400)

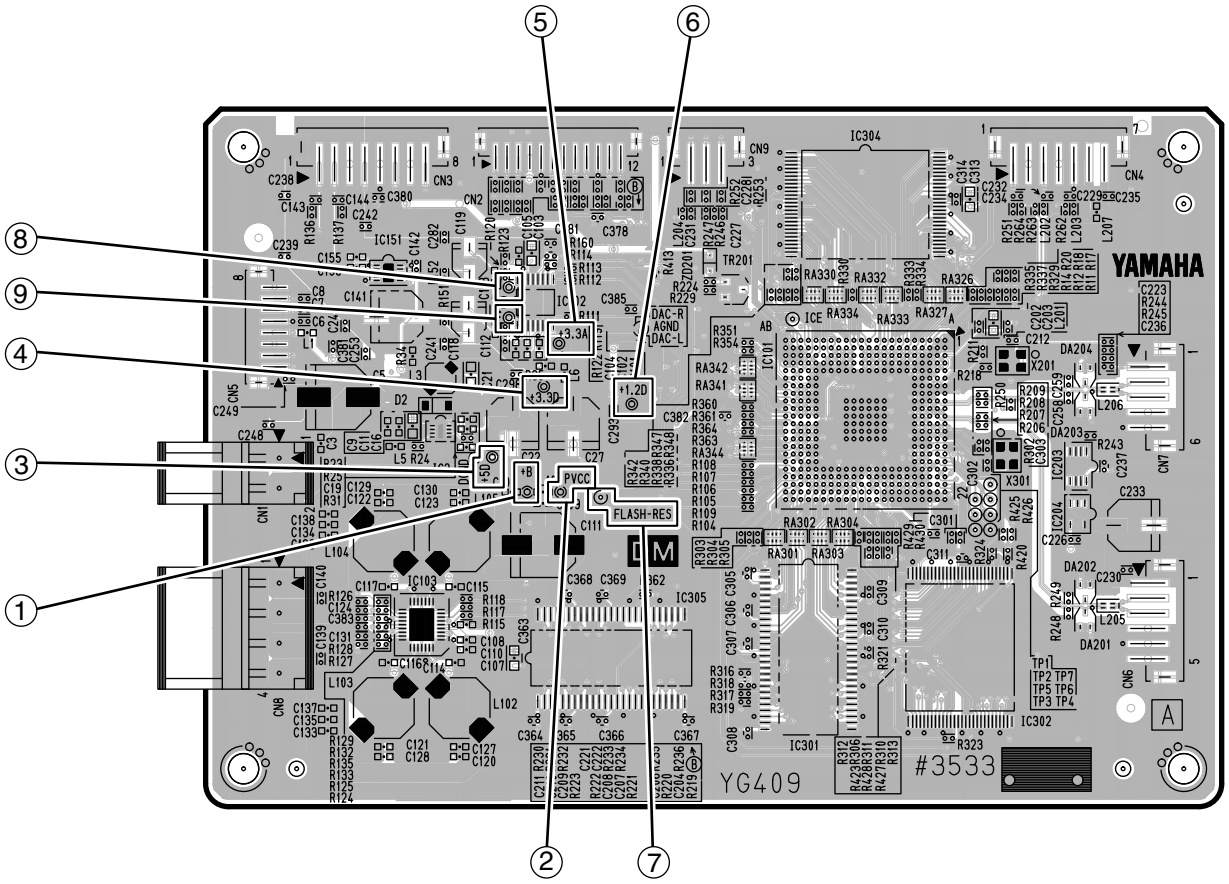

Component side

TEST PROGRAM

Caution:

- If Test item 28 Factory Set is executed, the setting data and user data will be erased. Be sure to save the backup data in advance.

1. Measurement condition

1-1. Environment

Perform tests under following conditions.

- Ordinary temperature (5 - 40 degrees Celsius)
- Ordinary humidity (20 - 90 %)

If the test results deviate from the test standard range, however, re-test under such conditions as the ordinary temperature (5 - 40 degrees Celsius) and ordinary humidity (30 - 90 % relative humidity).

1-2. Power voltage

The power voltage should be the rated voltage as indicated on the name plate.

The AC power should be 50 or 60 Hz.

Use PA-300C for the AC adaptor.

The voltage should be +/- 10% of the rating voltage of the adaptor being used.

1-3. Measuring instrument

Make sure that the instruments used for inspections have enough accuracy and precision.

Use the instruments with more than 1M-ohms input impedance.

- Level meter (using JIS-C filter)
- Frequency counter (should be capable of measuring to three places of decimals)

1-4. Test jig

Following jigs are required for testing.

- USB cable (A-B type)

1-5. Terminal condition

Unless otherwise specified, take measurement at the [PHONES] jack. (Use a stereo plug.)

[PHONES] : Install a measuring plug (L/R ch : 33-ohms load)

1-6. Control condition

Unless otherwise specified, set control knobs as follows.

- [MASTER VOLUME] : Max
- Pedals : Off

Set others in the default state when the power is turned on.

2. Test mode

2-1. Starting Test mode

1) While holding down the [C#2], [F2] and [G#2] keys simultaneously, press the [⏻] (Standby/On) switch to turn the power on.

2) When the Test Program is activated, the sine wave of A3 sounds. Press any white/black key to stop the sound.

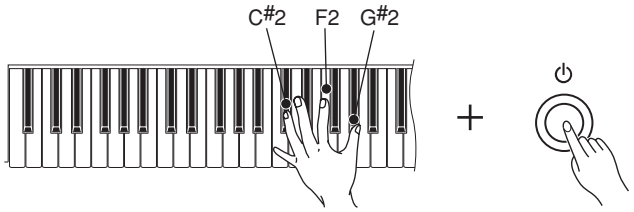

2-2. Selection/execution of Test items

1) Press the corresponding key to select and execute each Test item.

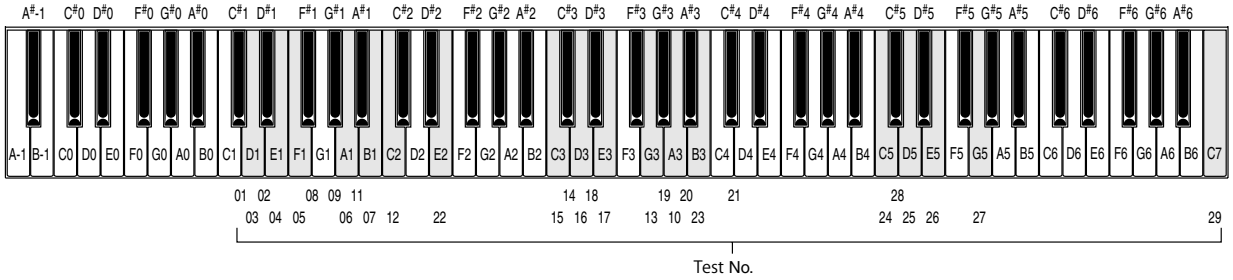

2-3. Test Program Item List

Number	Test Program Item	Instructions corresponding to "Selection/execution of Test items" 1)
01	**ROM Version**	Confirms the current version of the Main ROM and the Wave ROM. ▪ Checks the Main ROM version (ver. 1.xx) using [C0] - [A2] keys. ▪ Checks the Wave ROM version (ver. 1.xx) using [C3 - [A5] keys. Press keys in the specified range and find the key where the sine wave sounds. Check the version by the scale of that key. 1) Press the [C#1] key to start the test. 2) Press keys [C0] - [A0] to check the integer of the Main ROM version. OK (when the number corresponding to the pressed key agrees with the current version) : The sine wave of C4 sounds. NG (when disagrees) : The sine wave of C2 sounds. 3) Press keys [C1] - [A1] to check the first decimal place of the Main ROM version. 4) Press keys [C2] - [A2] to check the second decimal place of the Main ROM version. 5) Press keys [C3] - [A3] to check the integer of the Wave ROM version. 6) Press keys [C4] - [A4] to check the first decimal place of the Wave ROM version. 7) Press keys [C5] - [A5] to check the second decimal place of the Wave ROM version. 8) Press the [DEMO/SONG] button to exit from the current test. * For the Key-to-number correspondence, refer to the figure below. ▪ Example: In case of the Main ROM version 1.00 When the [C#0] key is pressed, the sine wave of C4 sounds, indicating 1 for the integer. When the [C1] key is pressed, the sine wave of C4 sounds, indicating 0 for the first decimal place. When the [C2] key is pressed, the sine wave of C4 sounds, indicating 0 for the second decimal place. In this way, the version 1.00 is confirmed. (The sine wave of C2 sounds when any key other than [C#0], [C1] and [C2] is pressed.)
02	**Memory Check 1 All**	Executes the check of all the ROMs and RAMs connected to the CPU bus. 1) Press the [D#1] key to start the test. OK : The sine wave of C4 sounds for 1 second. NG : The sine wave of C2 sounds for 1 second. 2) Press the [DEMO/SONG] button to exit from the current test.

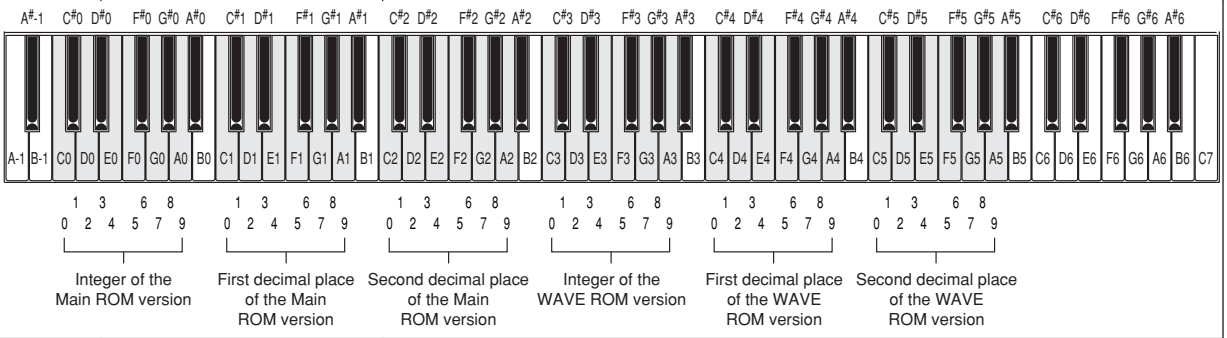

Number	Test Program Item	Instructions corresponding to "Selection/execution of Test items" 1)
03	**ROM Check 1**	Executes the simplified check of the Master ROM connected to the CPU bus. When the result of the Test item 02 Memory Check 1 All is OK, this test is not necessary. 1) Press the [D1] key to start the test. OK : The sine wave of C4 sounds for 1 second. NG : The sine wave of C2 sounds for 1 second. 2) Press the [DEMO/SONG] button to exit from the current test.
04	**RAM Check 1**	Executes the simplified check of the RAM connected to the CPU bus. When the result of the Test item 02 Memory Check 1 All is OK, this test is not necessary. 1) Press the [E1] key to start the test. OK : The sine wave of C4 sounds for 1 second. NG : The sine wave of C2 sounds for 1 second. 2) Press the [DEMO/SONG] button to exit from the current test.
05	**Wave ROM Check 1**	Executes the simplified check of the Wave ROM connected to the CPU bus. When the result of the Test item 02 Memory Check 1 All is OK, this test is not necessary. 1) Press the [F1] key to start the test. OK : The sine wave of C4 sounds for 1 second. NG : The sine wave of C2 sounds for 1 second. 2) Press the [DEMO/SONG] button to exit from the current test.
06	**Effect RAM Check 1**	Executes the simplified check of the Effect RAM connected to the CPU bus. When the result of the Test item 02 Memory Check 1 All is OK, this test is not necessary. 1) Press the [A1] key to start the test. OK : The sine wave of C4 sounds for 1 second. NG : The sine wave of C2 sounds for 1 second. 2) Press the [DEMO/SONG] button to exit from the current test.
07	**Pitch Check**	Checks whether or not the correct pitch is output from this instrument. 1) Connect the Frequency counter to the L or R channel of [PHONES] jack on the bottom panel. 2) Press the [B1] key so that the sine wave of A3 sounds. 3) Check whether or not 441.0 Hz +/- 0.2 Hz is indicated on the Frequency counter. “441.0 Hz +/- 0.2 Hz” indication means no problem. 4) Press the [DEMO/SONG] button to exit from the current test and to stop the sine wave sound.

Number	Test Program Item	Instructions corresponding to "Selection/execution of Test items" 1)
08	**Output Level R check**	Checks whether the stereo R sound is output from the [PHONES] jack properly or not. Confirms that the sine wave of C5 sounds at the level specified below. 1) Connect the Level meter (using JIS-C filter) to the [PHONES] jack. 2) Press the [F#1] key so that the sine wave of C5 sounds at the R channel. 3) Set the [MASTER VOLUME] knob to the minimum position, then confirm that the sound is not heard. When feeling inspection is in doubt, confirm that the maximum attenuation indicated on the Level meter is not less than 70 dB. 4) Set the [MASTER VOLUME] knob to the maximum position, then check the output level indicated on the Level meter. No problem if the following conditions are satisfied. [PHONES] L : -45.8 dBu or less (R ch = -5.8 dBu) [PHONES] R : -5.8 dBu +/- 2 dB (* 0 dBu = 0.775 V) 5) Press the [DEMO/SONG] button to exit from the current test and to stop the sine wave sound.
09	**Output Level L check**	Checks whether the stereo L sound is output from the [PHONES] jack properly or not. Confirms that the sine wave of C5 sounds at the level specified below. 1) Connect the Level meter (using JIS-C filter) to the [PHONES] jack. 2) Press the [G#1] key so that the sine wave of C5 sounds at the L channel. 3) Set the [MASTER VOLUME] knob to the minimum position, then confirm that the sound is not heard. When feeling inspection is in doubt, confirm that the maximum attenuation indicated on the Level meter is not less than 70 dB. 4) Set the [MASTER VOLUME] knob to the maximum position, then check the output level indicated on the Level meter. No problem if the following conditions are satisfied. [PHONES] L : -5.8 dBu +/- 2 dB [PHONES] R : -45.8 dBu or less (L ch = -5.8 dBu) (* 0 dBu = 0.775 V) 5) Press the [DEMO/SONG] button to exit from the current test and to stop the sine wave sound.
10	**SP MUTE Check**	Checks whether the Speaker MUTE works properly or not. 1) Press the [A3] key so that the sine wave of C5 sounds at the L and R channels. Sound is coming from the speakers, even if the headphones are connected. 2) Press the [+R] button for Speaker MUTE ON, then confirm that the sound is muted. 3) Press the [-L] button for Speaker MUTE OFF, then confirm that the sound is not muted. 4) Press the [DEMO/SONG] button to exit from the current test and to stop the sine wave sound. * During this test, never connect or disconnect the headphones.
11	**MUTE Check**	Checks whether the MUTE works properly or not. 1) Press the [A#1] key so that the sine wave of C5 sounds at the L and R channels. 2) Connect the headphones to the [PHONES] jack, and confirm the sound. 3) Press the [+R] button for MUTE ON, then confirm that the sound is muted. 4) Press the [-L] button for MUTE OFF, then confirm that the sound is not muted. 5) Press the [DEMO/SONG] button to exit from the current test and to stop the sine wave sound.

Number	Test Program Item	Instructions corresponding to "Selection/execution of Test items" 1)
12	**FS Circuit Check**	Checks whether the Fail-Safe Circuit works properly or not. 1) Press the [C2] key so that the sine wave of A3 sounds at the L and R channels. 2) Press the [+R] button so that the Fail-Safe Circuit works (MUTE ON), then confirm that the sound is muted. 3) Press the [-L] button so that the Fail-Safe Circuit stops (MUTE OFF), then confirm that the sound is not muted. 4) When the Fail-Safe Circuit is not recognized, the sine wave of C2 sounds. 5) Press the [DEMO/SONG] button to exit from the current test and to stop the sine wave sound.
13	**HP Insertion Check**	Checks whether the Speaker MUTE by the HP Insertion works properly or not. 1) Press the [G3] key so that the sine wave of C3 sounds from the speakers. 2) Connect the headphones to the [PHONES] jack. The sine wave of C4 sounds from the headphones. 3) Disconnect the headphones. OK : The sine wave of C4 sounds for 1 second from the speakers. NG : The sound from the speakers does not stop. 4) Press the [DEMO/SONG] button to exit from the current test and to stop the sine wave sound.
14	**SW, LED Check**	Checks whether each panel button with its LED (if available) works properly or not. 1) Press the [C#3] key to start the test. 2) Press the button one by one in the order below. Order for Switch Test : [DEMO/SONG] > [PIANO/VOICE] > [METRONOME] > [+R] > [-L] > [REC] > [PLAY] 3) While the button is pressed, the sine wave sounds at the pitch assigned to the pressed button, and the LED lamp lights if available. (See "SW/LED check") 4) Confirm that all the buttons are pressed correctly, resulting in OK. OK : The sine wave of C4 sounds for 1 second. 5) Press the [DEMO/SONG] button to exit from the current test. * Pressing two or more buttons results in NG. * Pressing the button different from the specified ones results in NG. * When the pressed button is not detected even though it is actually pressed, no sound is produced and the test results in NG.
15	**All LED ON Check**	Checks whether all the LED lamps light properly or not. 1) Press the [C3] key to start the test. 2) Confirm that all the LED lamps light. 3) Press the [DEMO/SONG] button to exit from the current test.
16	**Red LED ON Check**	Checks whether all the red LED lamps light properly or not. 1) Press the [D3] key to start the test. 2) Confirm that all the red LED lamps light. 3) Press the [DEMO/SONG] button to exit from the current test.
17	**Green LED ON Check**	Checks whether all the green LED lamps light properly or not. 1) Press the [E3] key to start the test. 2) Confirm that all the green LED lamps light. 3) Press the [DEMO/SONG] button to exit from the current test.

Number	Test Program Item	Instructions corresponding to "Selection/execution of Test items" 1)
18	**Master Volume Check**	Checks whether the maximum and minimum value of the [MASTER VOLUME] are correct or not. 1) Press the [D#3] key to start the test. 2) Set the [MASTER VOLUME] knob as follows. Order for Master Volume Test : [MIN] > [MAX] > Intermediate value or lower OK : The sine wave of C4 sounds for 1 second. 3) Press the [DEMO/SONG] button to exit from the current test.
19	**Pedal1 Check (Soft)**	Checks whether the Soft Pedal works properly or not. 1) Press the [G#3] key to start the test. 2) Press the Soft Pedal completely. 3) As soon as ON is recognized, the sine wave of C3 sounds for 1 second. 4) Release the Soft Pedal. OK : The sine wave of C4 sounds for 1 second. NG : Sound does not come out. 5) Press the [DEMO/SONG] button to exit from the current test.
20	**Pedal2 Check (Sostenuto)**	Checks whether the Sostenuto Pedal works properly or not. 1) Press the [A#3] key to start the test. 2) Press the Sostenuto Pedal completely. 3) As soon as ON is recognized, the sine wave of C3 sounds for 1 second. 4) Release the Sostenuto Pedal. OK : The sine wave of C4 sounds for 1 second. NG : Sound does not come out. 5) Press the [DEMO/SONG] button to exit from the current test.
21	**Pedal3 Check (Damper)**	Checks whether the Damper Pedal works properly or not. 1) Press the [C#4] key to start the test. 2) Press the Damper Pedal completely. 3) As soon as ON is recognized, the sine wave of C3 sounds for 1 second. 4) Release the Damper Pedal. OK : The sine wave of C4 sounds for 1 second. NG : Sound does not come out. 5) Press the [DEMO/SONG] button to exit from the current test.
22	**USB Check**	Checks whether the [USB TO HOST] terminal works properly or not. 1) Install a USB-MIDI driver in a PC, then finish a through Setup. 2) Using the USB cable, connect the PC to the [USB TO HOST] terminal on the bottom panel. 3) Press the [E2] key to start the test. OK : The sine wave of C4 sounds for 1 second. NG : The sine wave of C2 sounds for 1 second. 4) Press the [DEMO/SONG] button to exit from the current test. 5) Disconnect the USB cable.

Number	Test Program Item	Instructions corresponding to "Selection/execution of Test items" 1)
23	**Keyboard Type Check**	Checks whether or not the appropriate keyboard is connected. 1) Press the [B3] key to start the test. OK : The sine wave of C4 sounds for 1 second. NG : The sine wave of C2 sounds for 1 second. 2) Press the [DEMO/SONG] button to exit from the current test.
24	**ROM Check 2**	Executes the check for all the addresses of the Master ROM connected to the CPU bus. It takes a few seconds until the test is completed. 1) Press the [C5] key to start the test. OK : The sine wave of C4 sounds for 1 second. NG : The sine wave of C2 sounds for 1 second. 2) Press the [DEMO/SONG] button to exit from the current test.
25	**RAM Check 2**	Executes the check for all the addresses of the RAM connected to the CPU bus. It takes a few seconds until the test is completed. 1) Press the [D5] key to start the test. OK : The sine wave of C4 sounds for 1 second. NG : The sine wave of C2 sounds for 1 second. 2) Press the [DEMO/SONG] button to exit from the current test.
26	**Wave ROM Check 2**	Executes the check for all the addresses of the Wave ROM connected to the CPU bus. It takes a few seconds until the test is completed. 1) Press the [E5] key to start the test. OK : The sine wave of C4 sounds for 1 second. NG : The sine wave of C2 sounds for 1 second. 2) Press the [DEMO/SONG] button to exit from the current test.
27	**Effect RAM Check 2**	Executes the check for all the addresses of the Effect RAM connected to the CPU bus. It takes a few seconds until the test is completed. 1) Press the [G5] key to start the test. OK : The sine wave of C4 sounds for 1 second. NG : The sine wave of C2 sounds for 1 second. 2) Press the [DEMO/SONG] button to exit from the current test.
28	**Factory Set**	Initializes all the backup data and restores the Default Settings. 1) Press the [C#5] key to restore the Default Settings. OK : The sine wave of C4 sounds for 1 second. NG : The sine wave of C2 sounds for 1 second. 2) Press the [DEMO/SONG] button to exit from the current test.
29	**Test Mode Exit**	Lets you exit from the Test mode to the Usual mode. Press the [C7] key. The Test mode will end.

3. Other Inspections (Check in Usual mode)

Number	Test Program Item	Instructions
	Noise Level Check	Checks whether the noise is output from the [PHONES] jack properly or not. 1) Connect the Level meter (using JIS-C filter) to the [PHONES] jack. 2) Set the [MASTER VOLUME] knob to the maximum position. 3) Check the noise level indicated on the Level meter. No problem if the following conditions are satisfied. [PHONES] L/R : -90.0 dBu or less (* 0 dBu = 0.775 V)

4. SW/LED check

Order	Button Name	Note Number
1	DEMO/SONG	C2
2	PIANO/VOICE	C#2
3	METRONOME	D2
4	+R	D#2
5	-L	E2
6	REC	F2
7	PLAY	F#2

INITIALIZING THE SETTINGS

Note:

- If this instrument somehow becomes disabled or malfunctions, turn off the power to the instrument, then perform the initialization procedure

Initializing the settings

When you initialize the settings, all data, excluding the songs loaded from a computer, will be initialized. (The procedure is different from the “Factory Set” of the “Test Program”.)

While holding down the C7 (the highest) key, turn on the power to the instrument.

The data (excluding the data for the songs loaded from a computer) will be initialized.

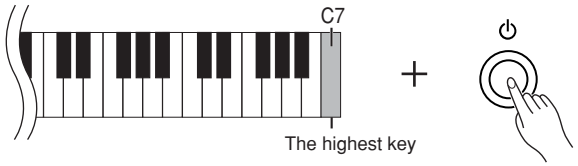

Caution:

- Do not turn off the power to this instrument while it is initializing the data in its internal memory (that is, while the [REC] and [PLAY] button indicators are flashing).

SYSTEM BOOTING FLOW CHART

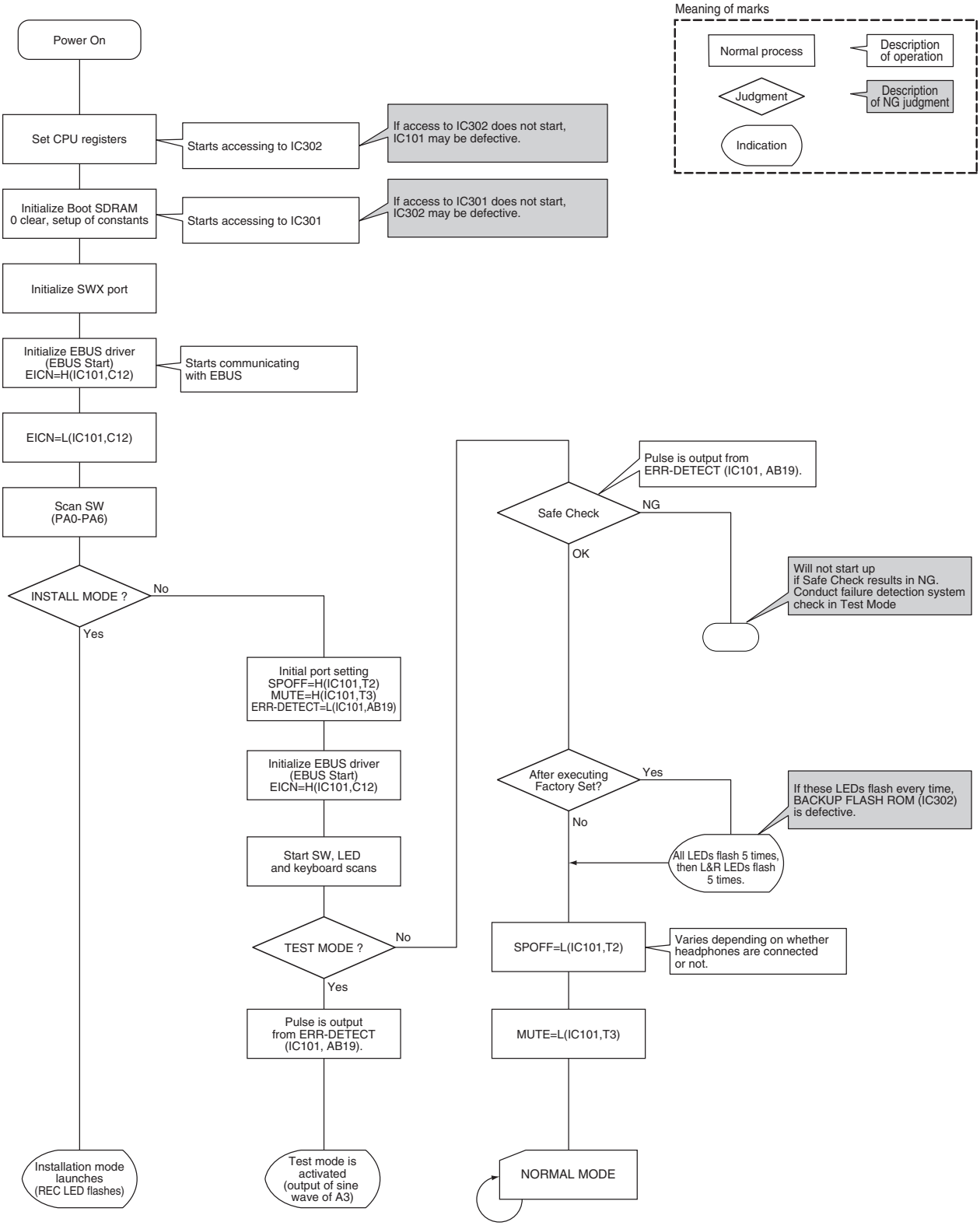

* "After executing Factory Set" refers to the condition of turning on power after executing "Factory Set" in Test Program.
* "Safe Check" refers to the confirmation of whether Mute is activated when ERR-DETECT pulse becomes discontinuous.

DIGITAL PIANO

YDP-S52B / YDP-S52WH

PARTS LIST

■ CONTENTS

OVERALL ASSEMBLY 2
MAIN UNIT 4
FRONT RAIL ASSEMBLY 7
SIDE ARM ASSEMBLY (L, R) 8
KEY BLOCK ASSEMBLY (L, R) 10
SP BOX ASSEMBLY 12
TOP BOARD ASSEMBLY 13
KEY COVER ASSEMBLY 14
SIDE BOARD ASSEMBLY(L, R) 16
P-BOX ASSEMBLY 18
PEDAL ASSEMBLY (C) 19
KEYBOARD ASSEMBLY 20
HP JACK ASSEMBLY 22
ELECTRICAL PARTS 23

* DESTINATION ABBREVIATIONS

A:	Australian model	O:	Chinese model
B:	British model	Q:	South-east Asia model
C:	Canadian model	T:	Taiwan model
D:	German model	U:	U.S.A. model
E:	European model	V:	General export model (110V)
F:	French model	W:	General export model (220V)
H:	North European model	N,X:	General export model
I:	Indonesian model	Y:	Export model
J:	Japanese model	K:	Korean model
M:	South African model	P:	Brazilian model

■ WARNING

Components having special characteristics are marked ⚠ and must be replaced with parts having specifications equal to those originally installed.

- The numbers “QTY” show quantities for each unit.
- The parts with “--” in “PART NO.” are not available as spare parts.
- This mark “ } ” in the REMARKS column means these parts are interchangeable.
- The second letter of the shaded ( ) part number is O, not zero.
- The second letter of the shaded ( ) part number is I, not one.

■ OVERALL ASSEMBLY

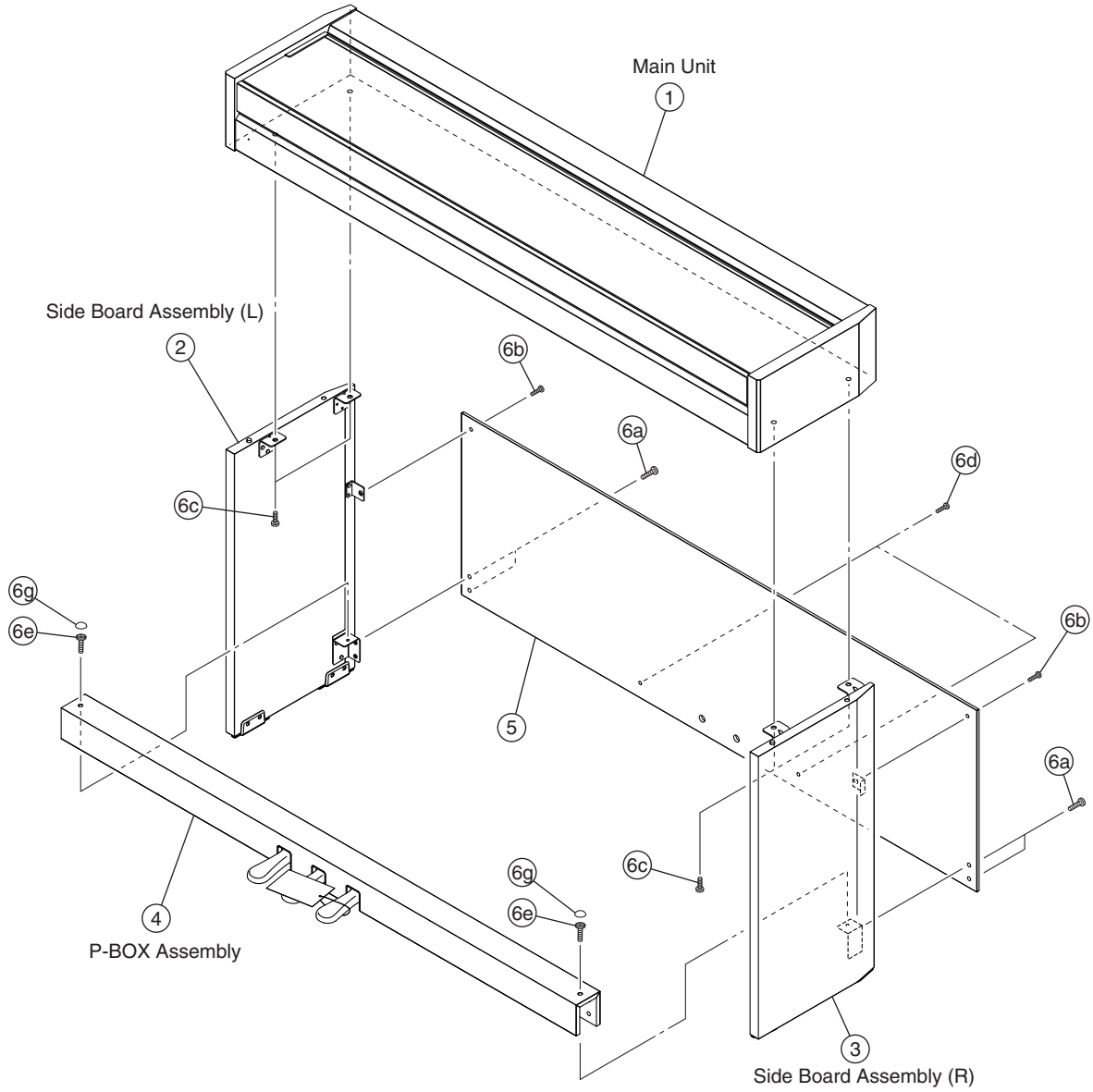

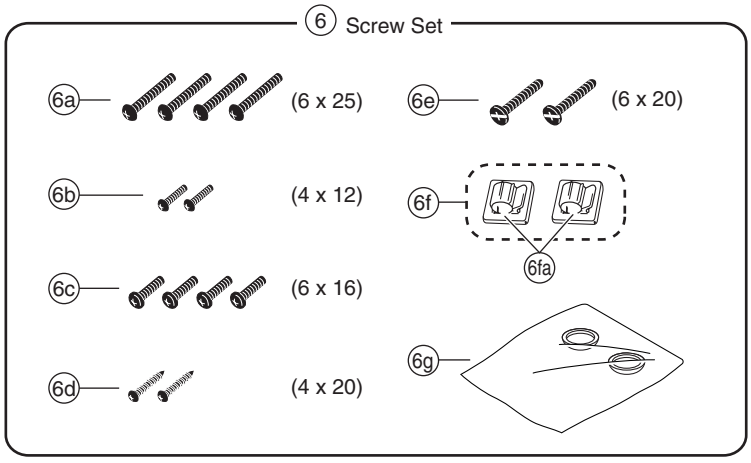

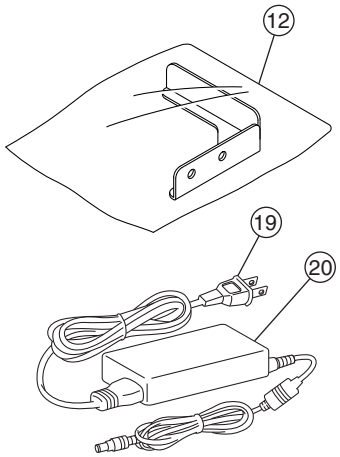

	REF NO.	PART NO.	DESCRIPTION		部品名	REMARKS	QTY
			OVERALL ASSEMBLY		総組立	YDP-S52B/YDP-S52WH	
	1	--	MAIN UNIT		メインユニット	YDP-S52B (ZN33260)	
	1	--	MAIN UNIT		メインユニット	YDP-S52WH (ZN33270)	
	2	**ZA608500**	SIDE BOARD ASSEMBLY L	LEFT	側板Ass'y L	YDP-S52B	
*	2	**ZN489200**	SIDE BOARD ASSEMBLY L	LEFT	側板Ass'y L	YDP-S52WH	
	3	**ZA608700**	SIDE BOARD ASSEMBLY R	RIGHT	側板Ass'y R	YDP-S52B	
*	3	**ZN489400**	SIDE BOARD ASSEMBLY R	RIGHT	側板Ass'y R	YDP-S52WH	
	4	--	PEDAL BOX ASSEMBLY		P-BOX Ass'y	YDP-S52B (ZA60940)	
	4	--	PEDAL BOX ASSEMBLY		P-BOX Ass'y	YDP-S52WH (ZA60950)	
	5	**ZA610100**	REAR PANEL SET BLACK/BLACK		裏板セット	YDP-S52B	
	5	**ZA610200**	REAR PANEL SET BLACK/WHITE		裏板セット	YDP-S52WH	
			ACCESSORIES		付属品		
	6	**ZA675900**	SCREW SET		ネジセット	YDP-S52B	
	6	**ZA925900**	SCREW SET		ネジセット	YDP-S52WH	
	6a	**WF10720R**	TRUSS HEAD SCREW	6.0X25 MFZN2B3	小ネジ+TRUS		4
	6b	**WE99770R**	TRUSS HEAD SCREW	4.0X12 MFZN2B3	小ネジ+TRUS	YDP-S52B	2
	6b	**WF354300**	TRUSS HEAD SCREW	4.0X12 MFZN2W3	小ネジ+TRUS	YDP-S52WH	2
	6c	**WE969400**	BIND HEAD SCREW	6.0X16 MFZN2B3	小ネジ+BIND		4
	6d	**WE96530R**	TRUSS HEAD TAPPING SCREW-1	4.0X20 MFZN2B3	TP#1+TRUS		2
	6e	**ZC111600**	BOLT+DISH	6.0X20 MFZN2W3	ボルト+DISH		2
	6f	**VR41030R**	CORD CLAMP SET	(2pcs 1set)	コードクランプセット		
	6fa	**VP59210R**	CORD CLAMPER	DKN-5B(VHB)	NKクランプ		2
	6fa	**WB090800**	CORD CLAMPER	OD-5 PT.IMAI	CSクランプ		2
	6g	**ZD035900**	CAP IN BAG BLACK		キャップ袋入り	YDP-S52B	
	6g	**ZC621100**	CAP IN BAG WHITE		キャップ袋入り	YDP-S52WH	
	12	**ZC273000**	BACK TOE ASSEMBLY IN BAG		バックトウ袋入り		
⚠	19	**V2917100**	POWER SUPPLY CORD SET	E 2P 2.5m 2.5A	電源コードセット	E,I	
⚠	19	**V3126501**	POWER SUPPLY CORD SET	B 2P 2.5m	電源コードセット	B	
⚠*	19	**ZN855800**	POWER SUPPLY CORD SET	AS 2P	電源コードセット	A	
⚠	19	**ZC295100**	POWER SUPPLY CORD SET	UC 2P 7A 2.44m	電源コードセット	U	
⚠	19	**ZG891000**	POWER SUPPLY CORD SET	K 2P 2.5A	電源コードセット	K	
⚠	19	**WU795100**	POWER SUPPLY CORD SET	BRA 2P 2.5m 2.5A	電源コードセット	P	
⚠	19	**WY221400**	POWER SUPPLY CORD SET	J 2P 2.5A 2.5m	電源コードセット	J	
⚠	19	**WC90170R**	POWER SUPPLY CODE SET	GB 2P 2.5m CHN	電源コードセット	O	
⚠	20	**WU691400**	AC ADAPTOR	PA-300C	ACアダプター		
			TOOL		工具		
		TX000671	ROD		ロッド		

* : New Parts(新規部品)

■ MAIN UNIT

• Bottom view 1

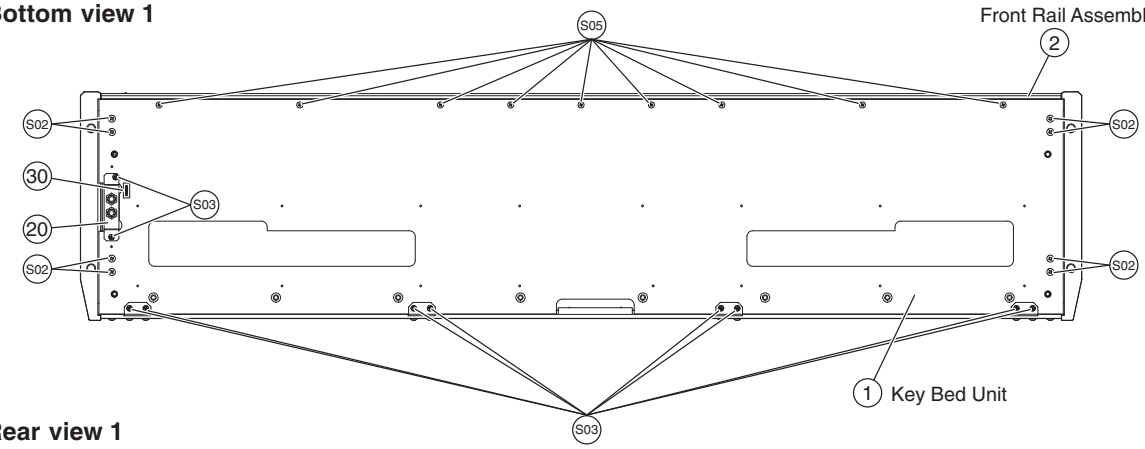

• Rear view 1

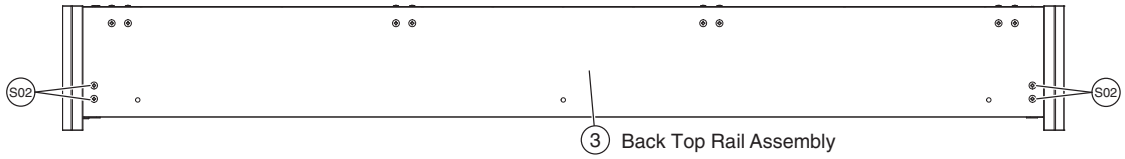

• Top view 1

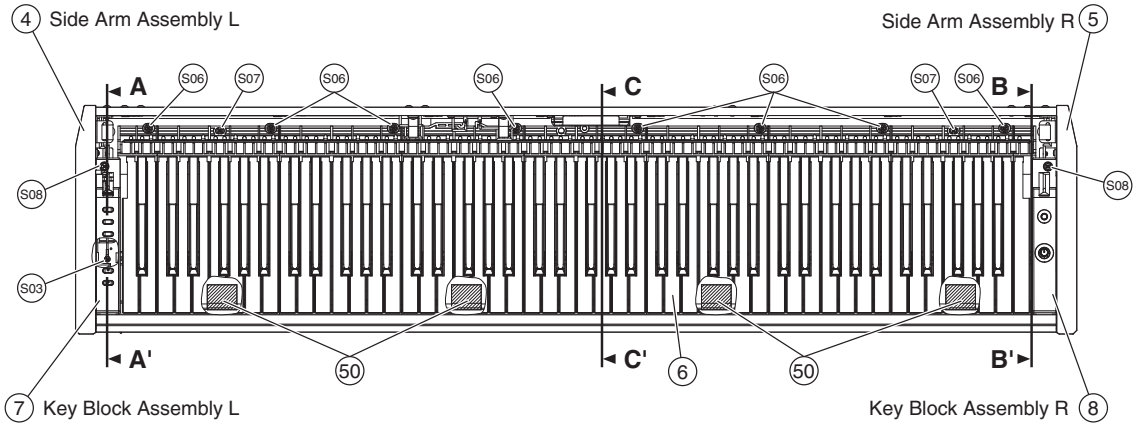

• Side view

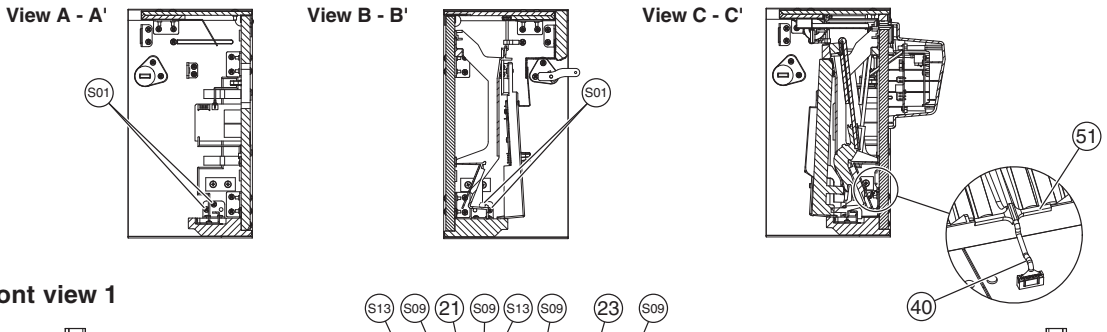

• Front view 1

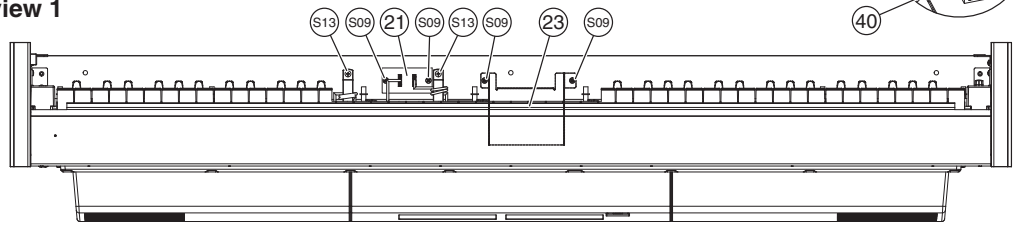

• **Top view 2**

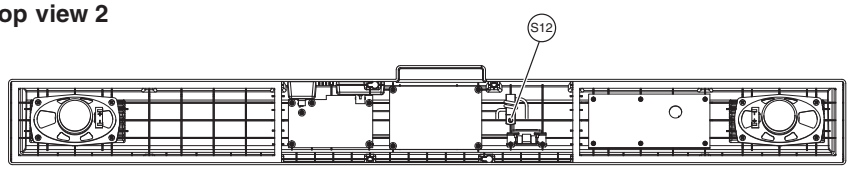

• **Bottom view 2**

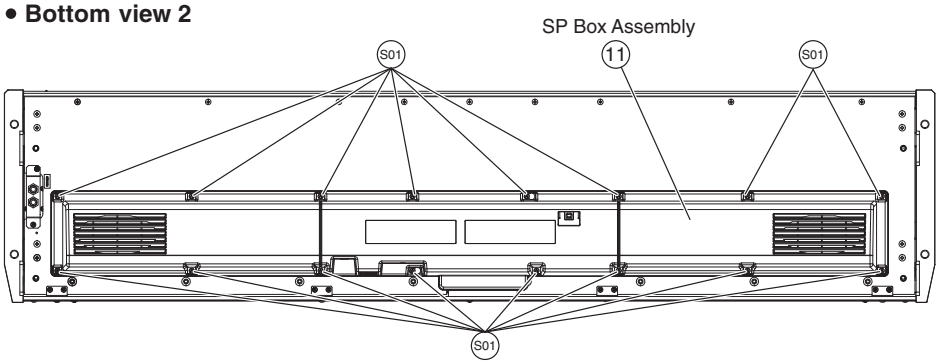

• **Rear view 2**

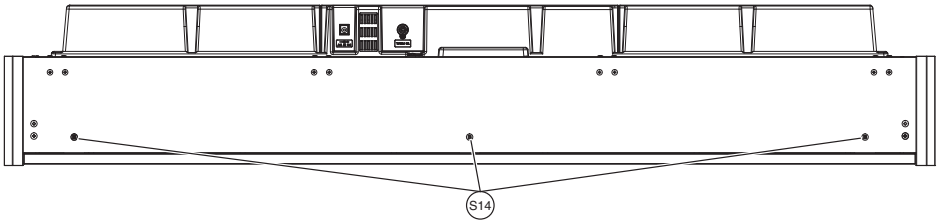

• **Top view 3**

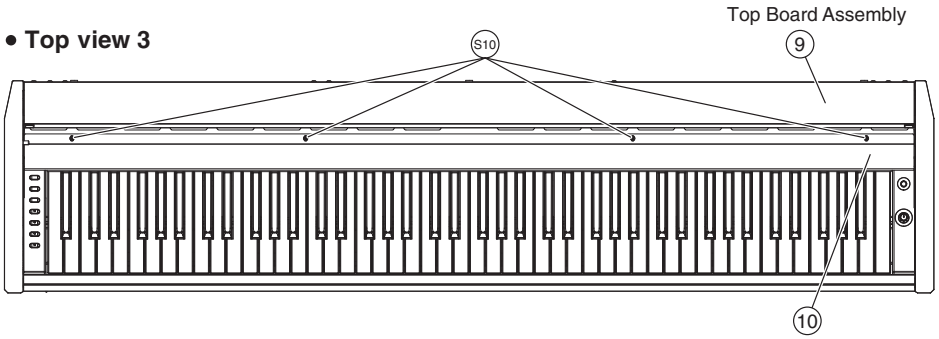

• **Front view 2**

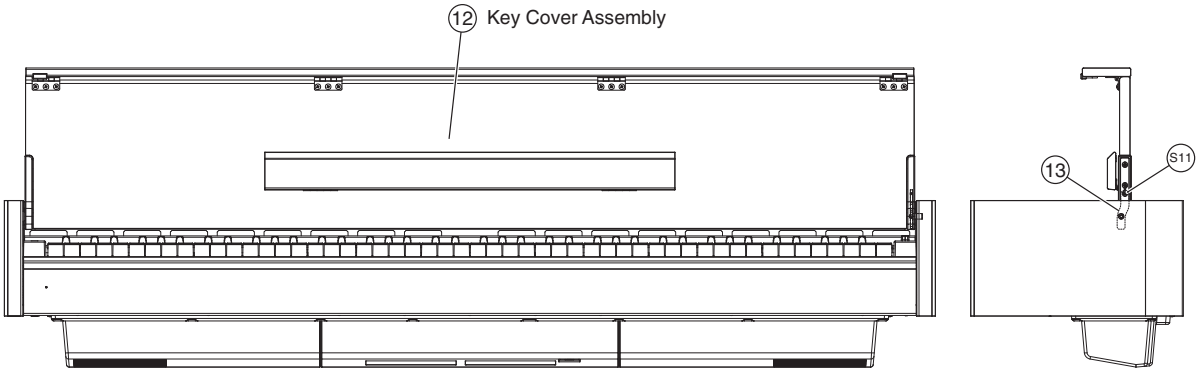

	REF NO.	PART NO.	DESCRIPTION		部品名	REMARKS		QTY
			MAIN UNIT		メインユニット	YDP-S52B/YDP-S52WH		
		--	MAIN UNIT		メインユニット	YDP-S52B	(ZN33260)	
		--	MAIN UNIT		メインユニット	YDP-S52WH	(ZN33270)	
	1	--	KEYBED ASSEMBLY		棚板集成		(ZN33230)	
	2	--	FRONT RAIL ASSEMBLY		口棒Ａｓｓ′ｙ	YDP-S52B	(ZA60430)	
	2	--	FRONT RAIL ASSEMBLY		口棒Ａｓｓ′ｙ	YDP-S52WH	(ZA60440)	
*	3	ZN332200	BACK TOP RAIL ASSEMBLY		背面框Ａｓｓ′ｙ			
*	4	ZN331200	ARM ASSEMBLY L	LEFT	腕木Ａｓｓ′ｙ Ｌ	YDP-S52B		
*	4	ZN331300	ARM ASSEMBLY L	LEFT	腕木Ａｓｓ′ｙ Ｌ	YDP-S52WH		
*	5	ZN331400	ARM ASSEMBLY R	RIGHT	腕木Ａｓｓ′ｙ Ｒ	YDP-S52B		
*	5	ZN331500	ARM ASSEMBLY R	RIGHT	腕木Ａｓｓ′ｙ Ｒ	YDP-S52WH		
	6	ZE153500	GHD LKS KEYBOARD ASSEMBLY	A88 IVORY ONLY WKEY	ＧＨＤ ＬＫＳ鍵盤			
	7	--	KEY BLOCK ASSEMBLY L	LEFT	拍子木Ａｓｓ′ｙ（Ｌ）	YDP-S52B	(ZA61150)	
	7	--	KEY BLOCK ASSEMBLY L	LEFT	拍子木Ａｓｓ′ｙ Ｌ	YDP-S52WH	(ZN36340)	
	8	--	KEY BLOCK ASSEMBLY R	RIGHT	拍子木Ａｓｓ′ｙ Ｒ	YDP-S52B	(ZN36350)	
	8	--	KEY BLOCK ASSEMBLY R	RIGHT	拍子木Ａｓｓ′ｙ Ｒ	YDP-S52WH	(ZN36360)	
*	9	ZN331600	TOP BOARD ASSEMBLY		屋根Ａｓｓ′ｙ	YDP-S52B		
*	9	ZN331700	TOP BOARD ASSEMBLY		屋根Ａｓｓ′ｙ	YDP-S52WH		
*	10	ZN363700	KEY STOP RAIL ASSEMBLY		鍵盤押えＡｓｓ′ｙ	YDP-S52B		
*	10	ZN363800	KEY STOP RAIL ASSEMBLY		鍵盤押えＡｓｓ′ｙ	YDP-S52WH		
	11	--	SPEAKER BOX ASSEMBLY		ＳＰ ＢＯＸ Ａｓｓ′ｙ		(ZN46270)	
*	12	ZN331800	KEY COVER ASSEMBLY		鍵盤蓋Ａｓｓ′ｙ	YDP-S52B		
*	12	ZN331900	KEY COVER ASSEMBLY		鍵盤蓋Ａｓｓ′ｙ	YDP-S52WH		
	13	--	KEY COVER AXIS		鍵盤蓋軸		(ZN31810)	
	20	ZD539600	HEADPHONE JACK ASSEMBLY		ＨＰジャックＡｓｓ′ｙ			
	21	ZA501100	CIRCUIT BOARD	RELAY	ＲＥＬＡＹシート			
	23	--	WIRE COVER	52X14X0.5	束線カバー		(ZC10910)	
	30	--	PHONES LABEL		ＰＨＯＮＥＳラベル		(VS47810)	
	40	--	WH COMMON ASSEMBLY		束線構成		(ZA89910)	
	50	WA530900	EL ADHESIVE TAPE	AL-40 40mmX20m	導電性粘着テープ			
	51	VP834601	FILAMENT TAPE	12X50	粘着テープ			
	S01	WE97070R	BIND HEAD TAPPING SCREW-1	3.5X16 MFZN2W3	ＴＰ＃１＋ＢＩＮＤ			20
	S02	WE98430R	TRUSS HEAD SCREW	4.0X20 MFZN2B3	小ネジ＋ＴＲＵＳ			12
	S03	WF831100	BIND HEAD TAPPING SCREW-1	3.5X11 MFZN2W3	ＴＰ＃１＋ＢＩＮＤ			11
	S05	WE97990R	TRUSS HEAD TAPPING SCREW-1	3.5X30 MFZN2W3	ＴＰ＃１＋ＴＲＵＳ			9
	S06	WF00150R	PAN HEAD SCREW	5.0X25 MFZN2W3	小ネジ＋ＰＡＮ			8
	S07	WE97190R	BIND HEAD TAPPING SCREW-1	4.0X14 MFZN2W3	ＴＰ＃１＋ＢＩＮＤ			2
	S08	WE97450R	BIND HEAD TAPPING SCREW-B	4.0X10 MFZN2W3	Ｂタイト＋ＢＩＮＤ			2
	S09	WF74530R	BIND HEAD TAPPING SCREW-1	3.5X8 MFZN2W3	ＴＰ＃１＋ＢＩＮＤ			4
	S10	WE878300	BIND HEAD SCREW	3.0X6 MFZN2B3	小ネジ＋ＢＩＮＤ	YDP-S52B		4
	S10	WE774000	BIND HEAD SCREW	3.0X6 MFZN2W3	小ネジ＋ＢＩＮＤ	YDP-S52WH		4
*	S11	ZN462800	FLAT HEAD SCREW	3.5X8 MFZN2B3	小ネジ＋ＦＬＡＴ	YDP-S52B		
*	S11	ZN462900	FLAT HEAD SCREW	3.5X8 MFZN2W3	小ネジ＋ＦＬＡＴ	YDP-S52WH		
	S12	WE98740R	BIND HEAD TAPPING SCREW-B	3.0X12 MFZN2W3	Ｂタイト＋ＢＩＮＤ			
	S13	WE970300	TRUSS HEAD TAPPING SCREW-1	3.5X10 MFZN2W3	ＴＰ＃１＋ＴＲＵＳ			2
	S14	ZE721900	SCREW + WASHER	4.0X16 WASHD8T0.5	特殊ねじ＋平座金			3
		--	WH COMMON ASSEMBLY		束線構成		(ZA89910)	
	W1	--	CONNECTOR ASSEMBLY	KB PH7P L=350	ＫＢ束線		(WF42610)	
	W2	--	CONNECTOR ASSEMBLY	HP PH7P/PH8P L=1100	ＨＰ束線		(ZA90190)	
	W3	--	CONNECTOR ASSEMBLY	PDERP PH8P/ZH8P L=90	ＰＤＥＲＰ束線		(ZA90200)	
	W4	--	CONNECTOR ASSEMBLY	DC VH2P L=80	ＤＣ束線		(ZA90210)	
	W5	--	CONNECTOR ASSEMBLY	SP VH4P L=600	ＳＰ束線		(ZQ01770)	
	W6	--	CONNECTOR ASSEMBLY	EBUS PH7P L=500	ＥＢＵＳ束線		(ZE60620)	
	W7	--	CONNECTOR ASSEMBLY	USB 5P L=300	ＵＳＢ束線		(ZA90240)	

＊：New Parts(新規部品)

FRONT RAIL ASSEMBLY

• Rear view

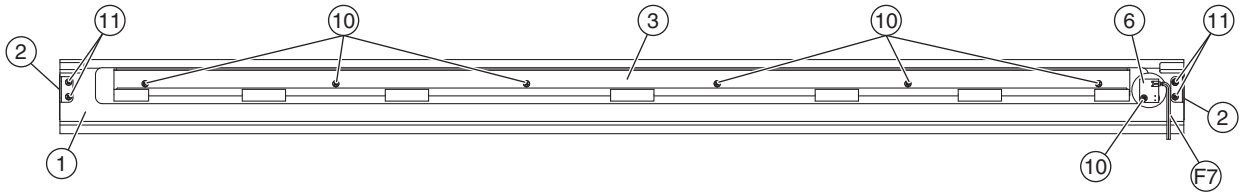

• Bottom view

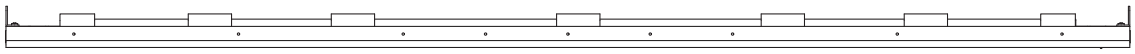

• Side view

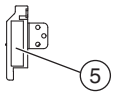

• Side view

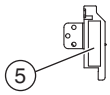

REF NO.	PART NO.	DESCRIPTION		部品名	REMARKS	QTY
		FRONT RAIL ASSEMBLY		口棒Ａｓｓ′ｙ	YDP-S52B/YDP-S52WH	
	--	FRONT RAIL ASSEMBLY		口棒Ａｓｓ′ｙ	YDP-S52B (ZA60430)	
	--	FRONT RAIL ASSEMBLY		口棒Ａｓｓ′ｙ	YDP-S52WH (ZA60440)	
1	**ZA604500**	FRONT RAIL BLACK		口棒	YDP-S52B	
1	**ZA604600**	FRONT RAIL WHITE		口棒	YDP-S52WH	
2	--	ANGLE (K)	1.6 L	アングルＫ	(V526350)	2
3	--	KEYBOARD RAIL ASSEMBLY		鍵盤前金具Ａｓｓ′ｙ	(WV68630)	
5	--	SPACER	52X14X0.5	スペーサー	(ZA61310)	2
6	**VU65910R**	CIRCUIT BOARD	PL	ＰＬシート		
F7	--	CONNECTOR ASSEMBLY	PL PH 2P-300	ＰＬ束線	(WW78780)	
10	**WF831100**	BIND HEAD TAPPING SCREW-1	3.5X11 MFZN2W3	ＴＰ#1+ＢＩＮＤ		7
11	**WE97070R**	BIND HEAD TAPPING SCREW-1	3.5X16 MFZN2W3	ＴＰ#1+ＢＩＮＤ		4

＊：New Parts(新規部品)

■ SIDE ARM ASSEMBLY (L, R)

Side Arm Assembly L

• Top view

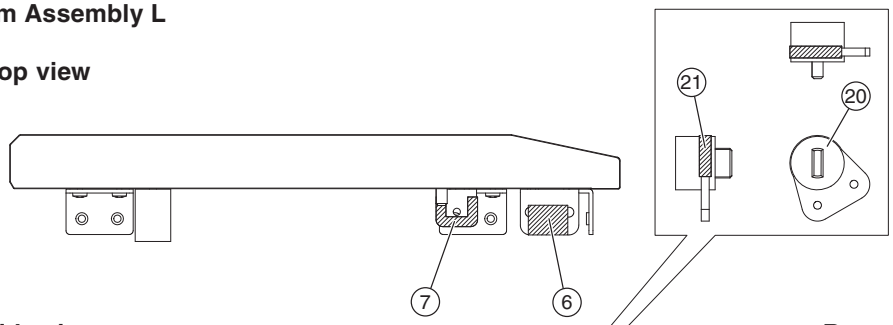

• Side view

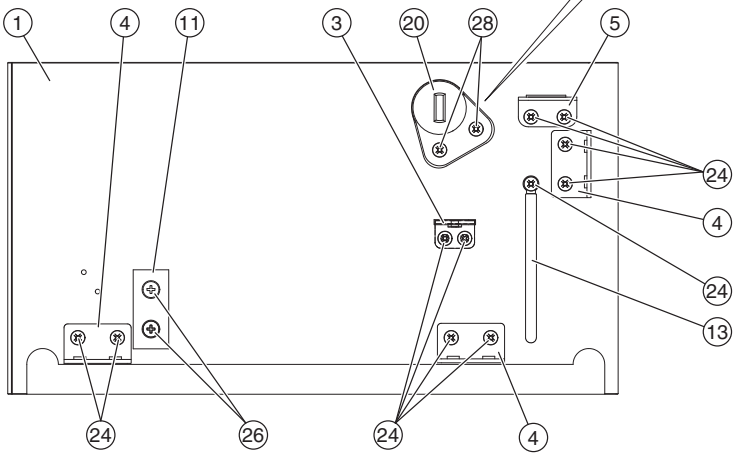

• Rear view

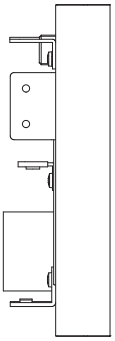

Side Arm Assembly R

• Top view

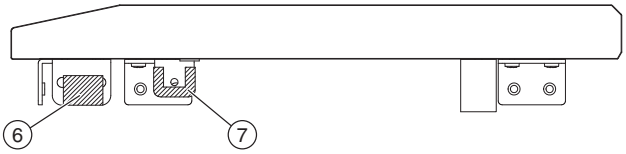

• Side view

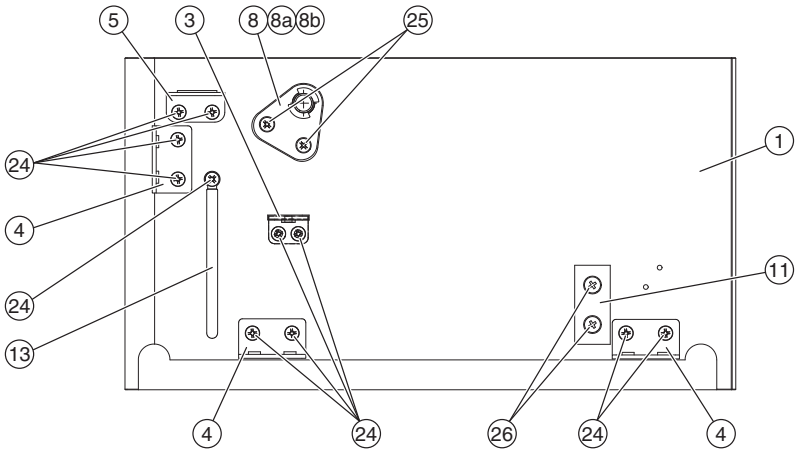

• Front view

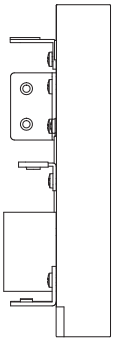

	REF NO.	PART NO.	DESCRIPTION		部品名	REMARKS	QTY
			ARM ASSEMBLY L	LEFT	腕木Ass'y L	YDP-S52B/YDP-S52WH	
*		**ZN331200**	ARM ASSEMBLY L	LEFT	腕木Ass'y L	YDP-S52B	
*		**ZN331300**	ARM ASSEMBLY L	LEFT	腕木Ass'y L	YDP-S52WH	
	1	**--**	ARM L BLACK	LEFT	腕木 L	YDP-S52B (ZN32780)	
	1	**--**	ARM L WHITE	LEFT	腕木 L	YDP-S52WH (ZN32790)	
	3	**--**	ANGLE BRACKET		受け金具	(VN88700)	
	4	**--**	L ANGLE		L アングル	(ZA67770)	3
	5	**--**	ANGLE (K)	1.6 L	アングル K	(V526350)	
	6	**--**	FELT	20X15	フェルト	(WN15920)	
	7	**--**	ADHESIVE CLOTH TAPE	10mm	ネンチャクテープ	(WG52560)	
	11	**--**	BLOCK A	18X40X26.5	ブロック A	(ZC59560)	
	13	**--**	CLIP, WIRE		束線止め	(CB81751)	
*	20	**ZN326300**	ROTARY DAMPER		ローターリーダンパー		
	21	**--**	NONWOVEN FABRIC CLOTH	40X6X0.5	不織布	(ZN99160)	
	24	**WE97070R**	BIND HEAD TAPPING SCREW-1	3.5X16 MFZN2W3	TP#1+BIND		11
	26	**WE97990R**	TRUSS HEAD TAPPING SCREW-1	3.5X30 MFZN2W3	TP#1+TRUS		2
	28	**WE965000**	TRUSS HEAD TAPPING SCREW-1	3.5X16 MFZN2B3	TP#1+TRUS		2
			ARM ASSEMBLY R	RIGHT	腕木Ass'y R	YDP-S52B/YDP-S52WH	
*		**ZN331400**	ARM ASSEMBLY R	RIGHT	腕木Ass'y R	YDP-S52B	
*		**ZN331500**	ARM ASSEMBLY R	RIGHT	腕木Ass'y R	YDP-S52WH	
	1	**--**	ARM R BLACK	RIGHT	腕木 R	YDP-S52B (ZN32800)	
	1	**--**	ARM R WHITE	RIGHT	腕木 R	YDP-S52WH (ZN32810)	
	3	**--**	ANGLE BRACKET		受け金具	(VN88700)	
	4	**--**	L ANGLE		L アングル	(ZA67770)	3
	5	**--**	ANGLE (K)	1.6 L	アングル K	(V526350)	
	6	**--**	FELT	20X15	フェルト	(WN15920)	
	7	**--**	ADHESIVE CLOTH TAPE	10mm	ネンチャクテープ	(WG52560)	
	8	**--**	BEARING ASSEMBLY		軸受けAss'y	(ZA68970)	
	8a	**--**	BEARING PLATE		軸受け金具塗装品	(ZA68980)	
	8b	**--**	BUSH BLACK		ブッシュ	(VS36850)	
	11	**--**	BLOCK A	18X40X26.5	ブロック A	(ZC59560)	
	13	**--**	CLIP, WIRE		束線止め	(CB81751)	
	24	**WE97070R**	BIND HEAD TAPPING SCREW-1	3.5X16 MFZN2W3	TP#1+BIND		11
	25	**WE963900**	FLAT HEAD TAPPING SCREW-1	3.5X16 MFZN2B3	TP#1+FLAT		2
	26	**WE97990R**	TRUSS HEAD TAPPING SCREW-1	3.5X30 MFZN2W3	TP#1+TRUS		2

*: New Parts(新規部品)

■ KEY BLOCK ASSEMBLY (L, R)

Key Block Assembly L

• Bottom view 1 **• Bottom view 2** **• Bottom view 3** **• Top view** **• Side view**

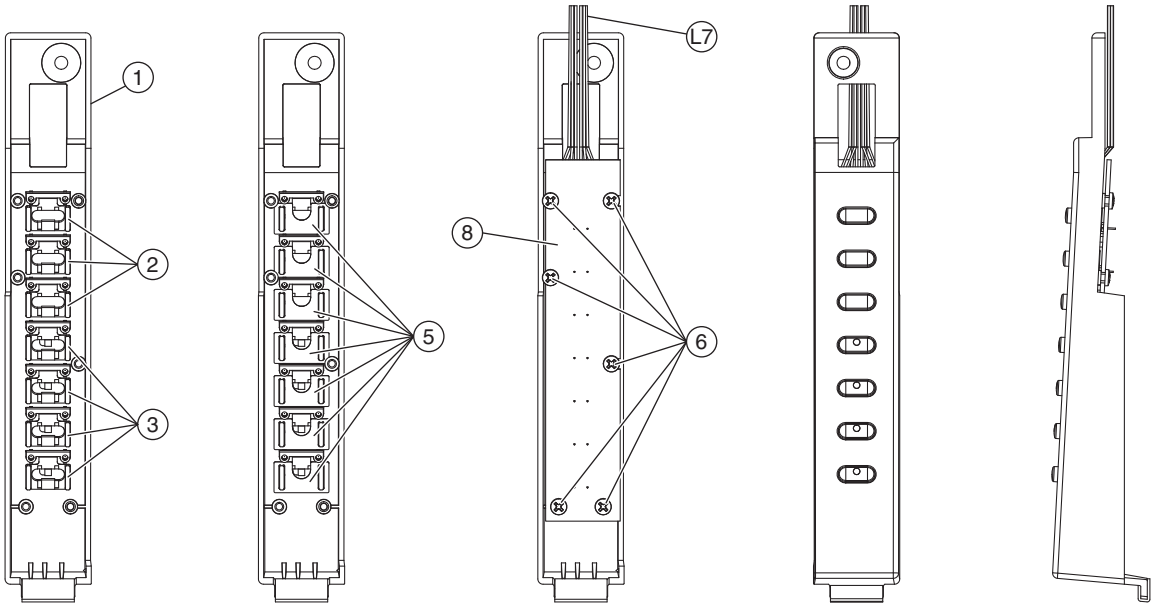

Key Block Assembly R

• Bottom view 1 **• Bottom view 2** **• Bottom view 3** **• Top view** **• Side view**

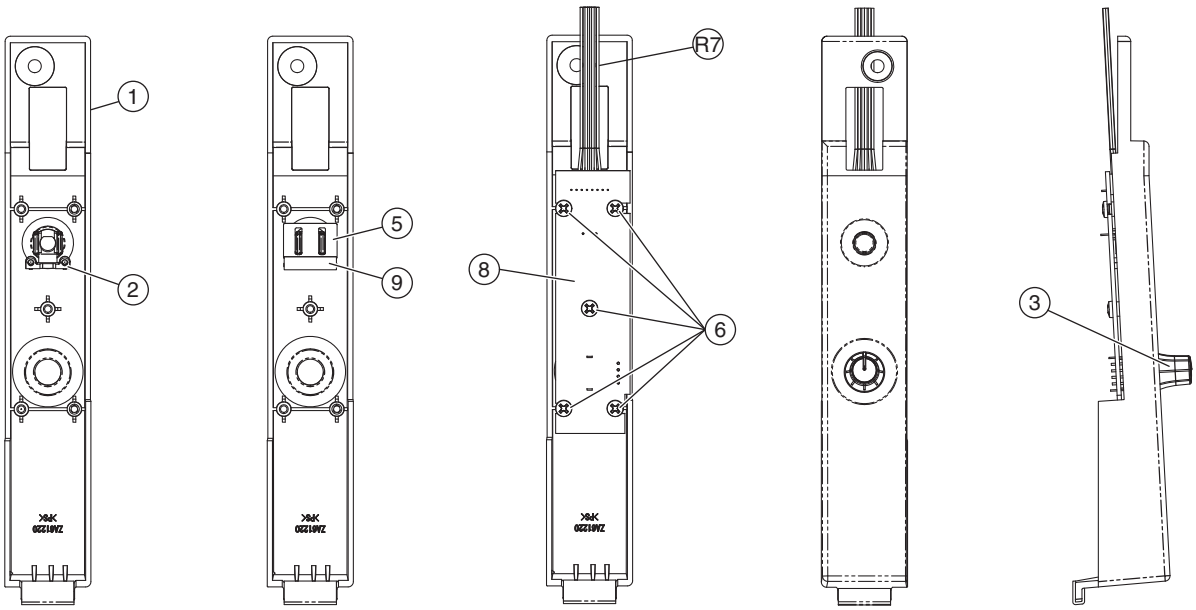

	REF NO.	PART NO.	DESCRIPTION		部品名	REMARKS	QTY
			KEY BLOCK ASSEMBLY L	LEFT	拍子木Ａｓｓ'ｙ（Ｌ）	YDP-S52B/YDP-S52WH	
		--	KEY BLOCK ASSEMBLY L	LEFT	拍子木Ａｓｓ'ｙ（Ｌ）	YDP-S52B (ZA61150)	
		--	KEY BLOCK ASSEMBLY L	LEFT	拍子木Ａｓｓ'ｙ Ｌ	YDP-S52WH (ZN36340)	
	1	**ZA611700**	KEY BLOCK (L) SUB ASSEMBLY	LEFT	拍子木Ｌサブ Ａｓｓ'ｙ	YDP-S52B	
*	1	**ZN443100**	KEY BLOCK L SUB ASSEMBLY	LEFT	拍子木Ｌサブ Ａｓｓ'ｙ	YDP-S52WH	
	2	**WM312700**	BUTTON (B)1 BLACK	x1	ボタン（Ｂ）１ブラック	YDP-S52B	3
*	2	**ZN444900**	BUTTON (B) WHITE	x1	ボ タ ン （ Ｂ ） 白	YDP-S52WH DEMO/SONG,PIANO/VOICE, METRONOME	3
	3	**WM312600**	BUTTON (B) BLACK	x1	ボ タ ン Ｂ ブ ラ ッ ク	YDP-S52B	4
*	3	**ZN444800**	BUTTON (B) WHITE LENS	x1	ボタン（Ｂ）白レンズ	YDP-S52WH +/R,-/L,REC,PLAY	4
	5	--	NONWOVEN FABRIC CLOTH		不 織 布	(V926650)	7
	6	**WE774300**	BIND HEAD TAPPING SCREW-B	3.0X8 MFZN2W3	Ｂ タ イ ト ＋ Ｂ Ｉ Ｎ Ｄ		6
	L7	--	CONNECTOR ASSEMBLY	PNL PH12P/ZH12P L=940	Ｐ Ｎ Ｌ 束 線	(ZA90160)	
	8	**ZA500400**	CIRCUIT BOARD	PNL	Ｐ Ｎ Ｌ シ ー ト		
			KEY BLOCK ASSEMBLY R	RIGHT	拍子木Ａｓｓ'ｙ Ｒ	YDP-S52B/YDP-S52WH	
		--	KEY BLOCK ASSEMBLY R	RIGHT	拍子木Ａｓｓ'ｙ Ｒ	YDP-S52B (ZN36350)	
		--	KEY BLOCK ASSEMBLY R	RIGHT	拍子木Ａｓｓ'ｙ Ｒ	YDP-S52WH (ZN36360)	
*	1	**ZN443200**	KEY BLOCK R SUB ASSEMBLY	RIGHT	拍子木Ｒサブ Ａｓｓ'ｙ	YDP-S52B	
*	1	**ZN443300**	KEY BLOCK R SUB ASSEMBLY	RIGHT	拍子木Ｒサブ Ａｓｓ'ｙ	YDP-S52WH	
	2	**WM860400**	BUTTON (D) BLACK	x1	ボ タ ン Ｄ 黒	YDP-S52B	
	2	**ZJ752400**	BUTTON (D) WHITE	x1	ボ タ ン Ｄ ホ ワ イ ト	YDP-S52WH POWER	
	3	**WY115600**	KNOB GAIN GRAY		ノ ブ Ｇ Ａ Ｉ Ｎ	YDP-S52B	
*	3	**ZN447900**	KNOB GAIN WHITE		ノ ブ Ｇ Ａ Ｉ Ｎ	YDP-S52WH MASTER VOLUME	
	5	--	NONWOVEN FABRIC CLOTH 25		不 織 布 ２ ５	(WE09470)	
	6	**WE774300**	BIND HEAD TAPPING SCREW-B	3.0X8 MFZN2W3	Ｂ タ イ ト ＋ Ｂ Ｉ Ｎ Ｄ		5
	R7	--	CONNECTOR ASSEMBLY	PNR2 PH3P/PH5P/PH4P-980	Ｐ Ｎ Ｒ ２ 束 線	(ZF32260)	
	8	**ZA500500**	CIRCUIT BOARD	PNR	Ｐ Ｎ Ｒ シ ー ト		
	9	--	NONWOVEN FABRIC CLOTH	20X5X0.15T	不 織 布	(WV34140)	

＊: New Parts(新規部品)

■ SP BOX ASSEMBLY

• Rear view

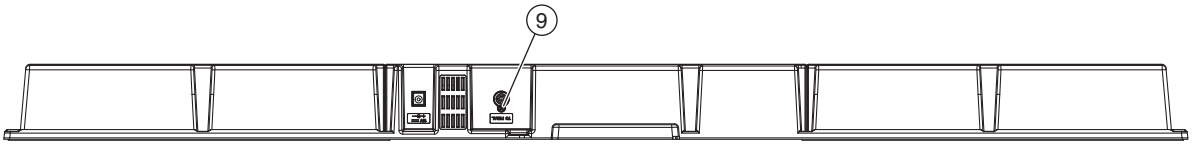

• Top view

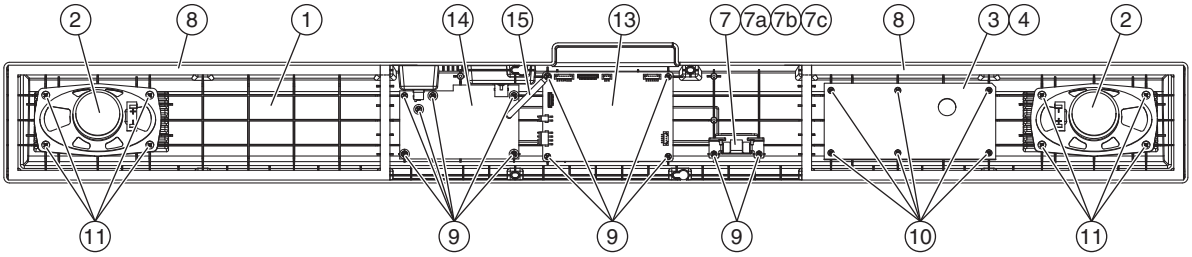

REF NO.	PART NO.	DESCRIPTION		部品名	REMARKS	QTY
		SPEAKER BOX ASSEMBLY		SP BOX Ass'y	YDP-S52B/YDP-S52WH	
	--	SPEAKER BOX ASSEMBLY		SP BOX Ass'y	(ZN46270)	
1	--	SPEAKER BOX BLACK		SPBOX	(ZA61250)	
* 2	YG697A00	LOUD SPEAKER	6X12cm 4ohm 10W	スピーカ		2
3	--	DAMPER COVER		ダンパーカバー	(ZA61290)	
4	--	CUSHION (PE)		クッション(PE)	(ZA61300)	
7	--	USB JACK ASSEMBLY		USBジャックAss'y	(ZA69310)	
7a	--	USB ANGLE		USB金具印刷品	(ZC27220)	
7b	ZA501200	CIRCUIT BOARD	USB	USBシート		
7c	WE774300	BIND HEAD TAPPING SCREW-B	3.0X8 MFZN2W3	Bタイト+BIND		2
8	--	CUSHION (PE)	1040X10X1	クッション(PE)	(WK26020)	2
9	WE774300	BIND HEAD TAPPING SCREW-B	3.0X8 MFZN2W3	Bタイト+BIND		13
10	WE98740R	BIND HEAD TAPPING SCREW-B	3.0X12 MFZN2W3	Bタイト+BIND		6
11	WE97460R	BIND HEAD TAPPING SCREW-B	4.0X8 MFZN2W3	Bタイト+BIND		8
* 13	ZM361200	CIRCUIT BOARD	DM	DMシート		
14	ZA500800	CIRCUIT BOARD	DCPJ	DCPJシート		
15	--	CLIP, WIRE		束線止め	(CB81751)	

*: New Parts(新規部品)

TOP BOARD ASSEMBLY

• Top view

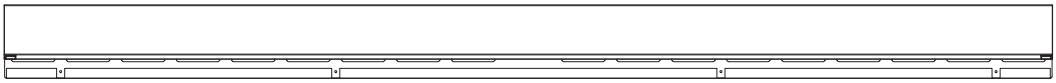

• Front view

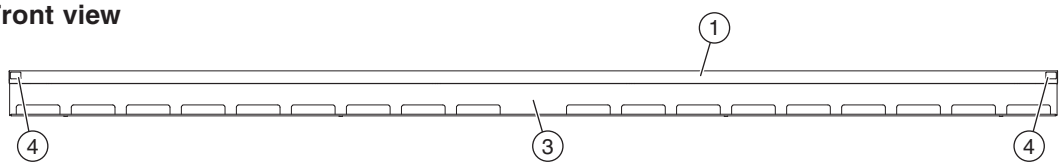

• Side view



• Bottom view

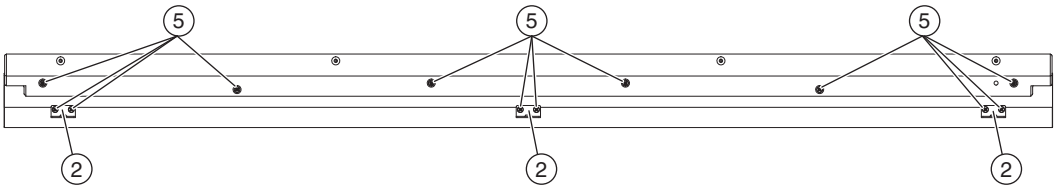

	REF NO.	PART NO.	DESCRIPTION		部品名	REMARKS	QTY
			TOP BOARD ASSEMBLY		屋根Ａｓｓ′ｙ	YDP-S52B/YDP-S52WH	
*		**ZN331600**	TOP BOARD ASSEMBLY		屋根Ａｓｓ′ｙ	YDP-S52B	
*		**ZN331700**	TOP BOARD ASSEMBLY		屋根Ａｓｓ′ｙ	YDP-S52WH	
	1	**--**	TOP BOARD BLACK		屋根	YDP-S52B (ZN32820)	
	1	**--**	TOP BOARD WHITE		屋根	YDP-S52WH (ZN32830)	
	2	**--**	HOLDER, BACK BOARD		裏板取付金具	(VQ95830)	3
	3	**--**	TOP BOARD RAIL ASSEMBLY		屋根レールＡｓｓ′ｙ	(ZN54450)	
*	4	**ZP908600**	RUBBER STOPPER BLACK		ゴムストッパー黒	YDP-S52B	2
	4	**ZA853000**	RUBBER STOPPER WHITE		ゴムストッパー白	YDP-S52WH	2
	5	**WF831100**	BIND HEAD TAPPING SCREW-1	3.5X11 MFZN2W3	ＴＰ＃１＋ＢＩＮＤ		12

＊: New Parts(新規部品)

■ KEY COVER ASSEMBLY

• Top view

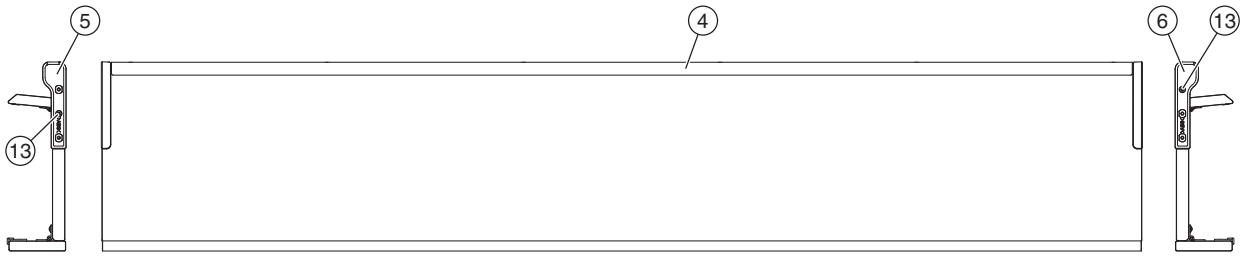

• Front view

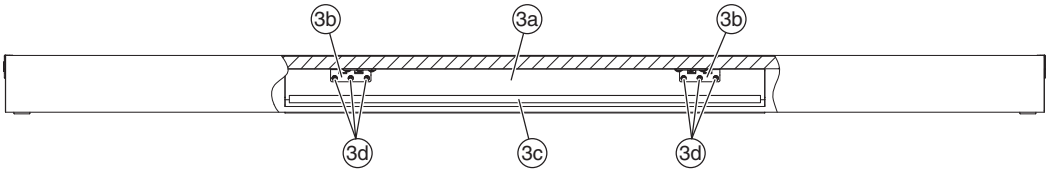

• Bottom view

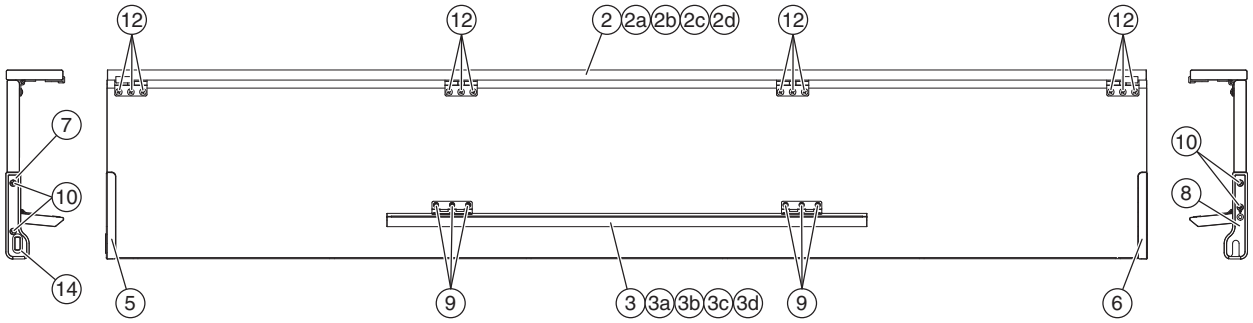

• Rear view

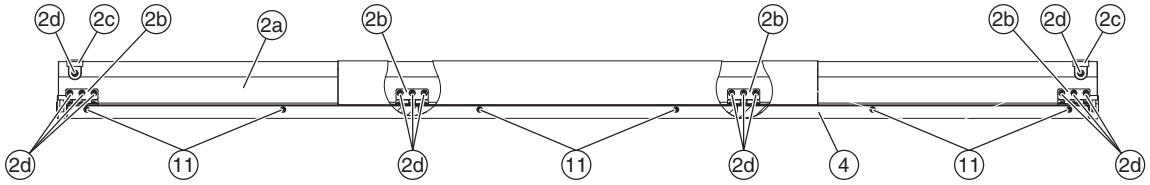

	REF NO.	PART NO.	DESCRIPTION		部品名	REMARKS	QTY
			KEY COVER ASSEMBLY		鍵盤蓋Ａｓｓ'ｙ	YDP-S52B/YDP-S52WH	
*		**ZN331800**	KEY COVER ASSEMBLY		鍵盤蓋Ａｓｓ'ｙ	YDP-S52B	
*		**ZN331900**	KEY COVER ASSEMBLY		鍵盤蓋Ａｓｓ'ｙ	YDP-S52WH	
*	2	**ZN362700**	KEY COVER FRONT ASSEMBLY		鍵盤蓋前Ａｓｓ'ｙ	YDP-S52B	
*	2	**ZN362800**	KEY COVER FRONT ASSEMBLY		鍵盤蓋前Ａｓｓ'ｙ	YDP-S52WH	
	2a	**--**	KEY COVER FRONT		鍵盤蓋前印刷品	YDP-S52B (ZN32880)	
	2a	**--**	KEY COVER FRONT		鍵盤蓋前印刷品	YDP-S52WH (ZN32890)	
	2b	**--**	HINGE C		蝶番Ｃ塗装品	YDP-S52B (ZC12410)	4
	2b	**--**	HINGE C		蝶番Ｃ塗装品	YDP-S52WH (ZE55720)	4
	2c	**ZA852800**	STOPPER		ストッパー	YDP-S52B	2
	2c	**WK174200**	STOPPER		ストッパー	YDP-S52WH	2
	2d	**WF107800**	FLAT HEAD TAPPING SCREW-1	3.0X10 MFZN2B3	ＴＰ＃１＋ＦＬＡＴ	YDP-S52B	14
	2d	**WF743300**	FLAT HEAD TAPPING SCREW-1	3.0X10 MFZN2W3	ＴＰ＃１＋ＦＬＡＴ	YDP-S52WH	14
*	3	**ZN332000**	MUSIC STAND ASSEMBLY		譜面台Ａｓｓ'ｙ	YDP-S52B	
*	3	**ZN332100**	MUSIC STAND ASSEMBLY		譜面台Ａｓｓ'ｙ	YDP-S52WH	
	3a	**--**	MUSIC STAND BLACK		譜面台	YDP-S52B (ZN32940)	
	3a	**--**	MUSIC STAND WHITE		譜面台	YDP-S52WH (ZN32950)	
	3b	**--**	HINGE B		蝶番Ｂ塗装品	YDP-S52B (ZA61450)	2
	3b	**--**	HINGE B		蝶番Ｂ	YDP-S52WH (WK04480)	2
	3c	**--**	ARTIFICIAL LEATHER BLACK		人工皮革	YDP-S52B (ZA61340)	
	3c	**--**	ARTIFICIAL LEATHER GRAY		人工皮革	YDP-S52WH (ZA61350)	
	3d	**WF107800**	FLAT HEAD TAPPING SCREW-1	3.0X10 MFZN2B3	ＴＰ＃１＋ＦＬＡＴ	YDP-S52B	6
	3d	**WF743300**	FLAT HEAD TAPPING SCREW-1	3.0X10 MFZN2W3	ＴＰ＃１＋ＦＬＡＴ	YDP-S52WH	6
	4	**--**	KEY COVER RAIL		鍵蓋レール塗装品	(ZN31880)	
*	5	**ZN315700**	COUPLER L BLACK	LEFT	カプラーＬ塗装品	YDP-S52B	
*	5	**ZN315800**	COUPLER L WHITE	LEFT	カプラーＬ塗装品	YDP-S52WH	
*	6	**ZN315900**	COUPLER R BLACK	RIGHT	カプラーＲ塗装品	YDP-S52B	
*	6	**ZN316000**	COUPLER R WHITE	RIGHT	カプラーＲ塗装品	YDP-S52WH	
*	7	**ZN317000**	COUPLER ANGLE L	LEFT	カプラー金具Ｌ塗装品	YDP-S52B	
*	7	**ZN317100**	COUPLER ANGLE L	LEFT	カプラー金具Ｌ塗装品	YDP-S52WH	
*	8	**ZN317200**	COUPLER ANGLE R	RIGHT	カプラー金具Ｒ塗装品	YDP-S52B	
*	8	**ZN317300**	COUPLER ANGLE R	RIGHT	カプラー金具Ｒ塗装品	YDP-S52WH	
	9	**WF107800**	FLAT HEAD TAPPING SCREW-1	3.0X10 MFZN2B3	ＴＰ＃１＋ＦＬＡＴ	YDP-S52B	6
	9	**WF743300**	FLAT HEAD TAPPING SCREW-1	3.0X10 MFZN2W3	ＴＰ＃１＋ＦＬＡＴ	YDP-S52WH	6
	10	**WE969900**	FLAT HEAD TAPPING SCREW-1	3.5X25 MFZN2B3	ＴＰ＃１＋ＦＬＡＴ	YDP-S52B	4
*	10	**ZN582700**	FLAT HEAD TAPPING SCREW-1	3.5X25 MFZN2W3	ＴＰ＃１＋ＦＬＡＴ	YDP-S52WH	4
	11	**WK786900**	FLAT HEAD TAPPING SCREW-1	3.0X16 MFZN2W3	ＴＰ＃１＋ＦＬＡＴ		6
	12	**WE956000**	TRUSS HEAD TAPPING SCREW-1	3.5X10 MFZN2B3	ＴＰ＃１＋ＴＲＵＳ	YDP-S52B	12
	12	**WE970300**	TRUSS HEAD TAPPING SCREW-1	3.5X10 MFZN2W3	ＴＰ＃１＋ＴＲＵＳ	YDP-S52WH	12
	13	**WK277100**	FLAT HEAD TAPPING SCREW-1	3.5X16 MFZN2W3	ＴＰ＃１＋ＦＬＡＴ		2
	14	**--**	SPACER		スペーサ	(ZN44360)	

＊: New Parts(新規部品)

■ SIDE BOARD ASSEMBLY(L, R)

• Side view

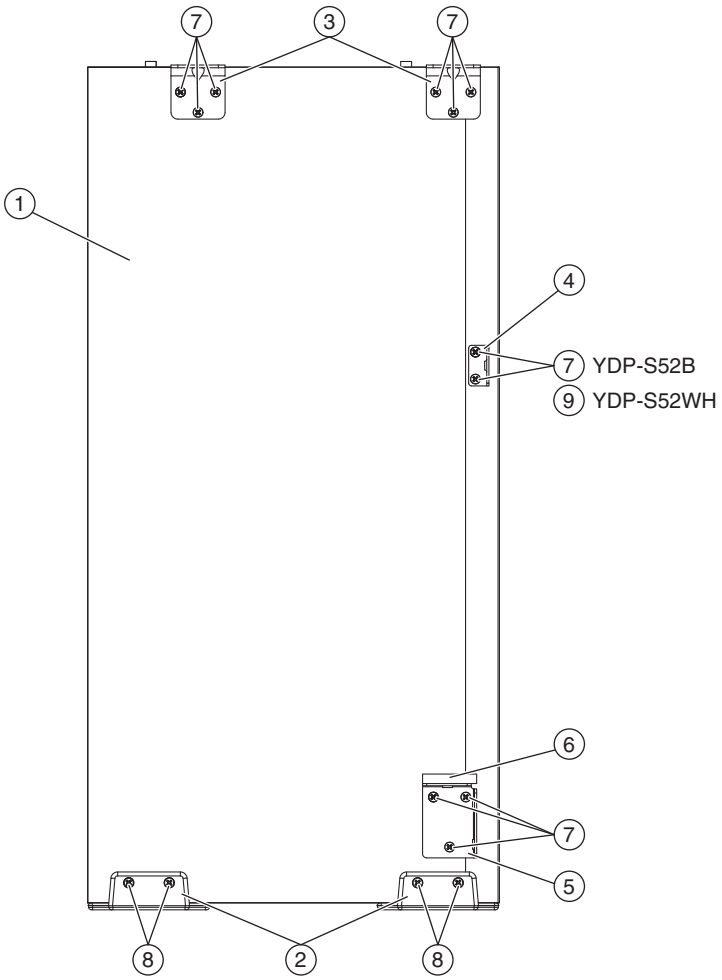

• Rear view

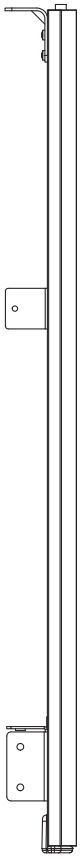

	REF NO.	PART NO.	DESCRIPTION		部品名	REMARKS	QTY
			SIDE BOARD ASSEMBLY L	LEFT	側板Ass'y L	YDP-S52B/YDP-S52WH	
		ZA608500	SIDE BOARD ASSEMBLY L	LEFT	側板Ass'y L	YDP-S52B	
*		**ZN489200**	SIDE BOARD ASSEMBLY L	LEFT	側板Ass'y L	YDP-S52WH	
	1	**--**	SIDE BOARD (L) BLACK	LEFT	側板(L)	YDP-S52B (ZA60890)	
	1	**--**	SIDE BOARD (L) WHITE	LEFT	側板(L)	YDP-S52WH (ZA60900)	
	2	**ZA693200**	SLIDE FEET BLACK		滑り座	YDP-S52B	2
	2	**ZC120900**	SLIDE FEET WHITE		滑り座	YDP-S52WH	2
	3	**--**	ST. ANGLE F		ST.アングルF	(ZN40940)	2
	4	**--**	HOLDER, BACK BOARD		裏板取付金具	YDP-S52B (VQ95830)	
	4	**--**	BACK BOARD ANGLE		裏板取付金具塗装品	YDP-S52WH (ZN48950)	
	5	**--**	PB ANGLE L	LEFT	PB金具L	(ZA69420)	
	6	**--**	SPACER	7X40X0.5	スペーサー	(ZA69430)	
	7	**WE971300**	BIND HEAD TAPPING SCREW-1	3.5X10 MFZN2B3	TP#1+BIND	YDP-S52B	11
	7	**WE971300**	BIND HEAD TAPPING SCREW-1	3.5X10 MFZN2B3	TP#1+BIND	YDP-S52WH	9
	8	**WF419700**	FLAT HEAD TAPPING SCREW-1	3.5X12 MFZN2B3	TP#1+FLAT	YDP-S52B	4
	8	**WF419901**	FLAT HEAD TAPPING SCREW-1	3.5X12 MFZN2W3	TP#1+FLAT	YDP-S52WH	4
	9	**WE97080R**	BIND HEAD TAPPING SCREW-1	3.5X10 MFZN2W3	TP#1+BIND	YDP-S52WH	2
			SIDE BOARD ASSEMBLY R	RIGHT	側板Ass'y R	YDP-S52B/YDP-S52WH	
		ZA608700	SIDE BOARD ASSEMBLY R	RIGHT	側板Ass'y R	YDP-S52B	
*		**ZN489400**	SIDE BOARD ASSEMBLY R	RIGHT	側板Ass'y R	YDP-S52WH	
	1	**--**	SIDE BOARD (R) BLACK	RIGHT	側板(R)	YDP-S52B (ZA60910)	
	1	**--**	SIDE BOARD (R) WHITE	RIGHT	側板(R)	YDP-S52WH (ZA60920)	
	2	**ZA693200**	SLIDE FEET BLACK		滑り座	YDP-S52B	2
	2	**ZC120900**	SLIDE FEET WHITE		滑り座	YDP-S52WH	2
	3	**--**	ST. ANGLE F		ST.アングルF	(ZN40940)	2
	4	**--**	HOLDER, BACK BOARD		裏板取付金具	YDP-S52B (VQ95830)	
	4	**--**	BACK BOARD ANGLE		裏板取付金具塗装品	YDP-S52WH (ZN48950)	
	5	**--**	PB ANGLE R	RIGHT	PB金具R	(ZA69440)	
	6	**--**	SPACER	7X40X0.5	スペーサー	(ZA69430)	
	7	**WE971300**	BIND HEAD TAPPING SCREW-1	3.5X10 MFZN2B3	TP#1+BIND	YDP-S52B	11
	7	**WE971300**	BIND HEAD TAPPING SCREW-1	3.5X10 MFZN2B3	TP#1+BIND	YDP-S52WH	9
	8	**WF419700**	FLAT HEAD TAPPING SCREW-1	3.5X12 MFZN2B3	TP#1+FLAT	YDP-S52B	4
	8	**WF419901**	FLAT HEAD TAPPING SCREW-1	3.5X12 MFZN2W3	TP#1+FLAT	YDP-S52WH	4
	9	**WE97080R**	BIND HEAD TAPPING SCREW-1	3.5X10 MFZN2W3	TP#1+BIND	YDP-S52WH	2

*: New Parts(新規部品)

■ P-BOX ASSEMBLY

• Front view

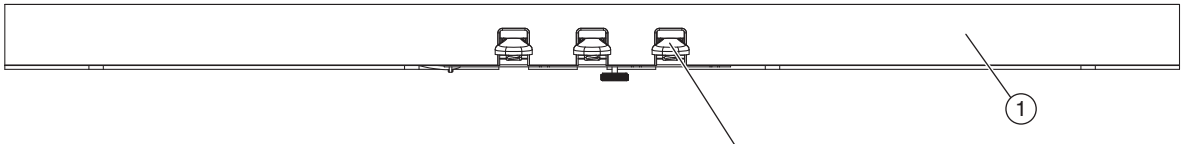

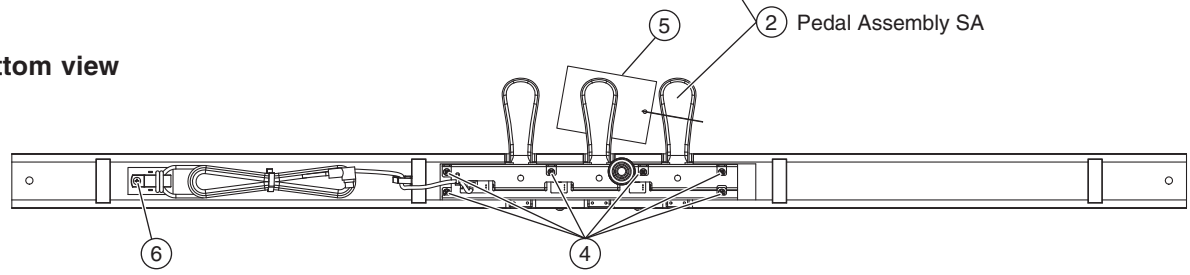

• Bottom view

• Rear view

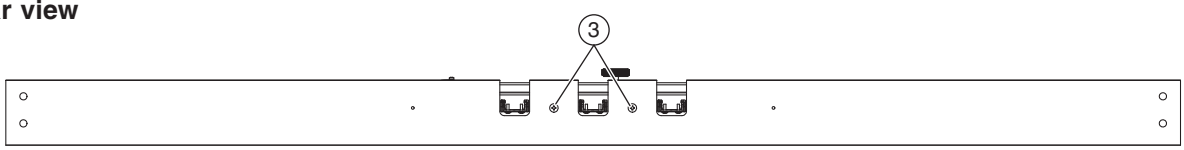

REF NO.	PART NO.	DESCRIPTION		部品名	REMARKS	QTY
		PEDAL BOX ASSEMBLY		P－BOX Ass'y	YDP-S52B/YDP-S52WH	
	--	PEDAL BOX ASSEMBLY		P－BOX Ass'y	YDP-S52B (ZA60940)	
	--	PEDAL BOX ASSEMBLY		P－BOX Ass'y	YDP-S52WH (ZA60950)	
1	**ZA609600**	PEDAL BOX SUB ASSEMBLY		ペダルBOX木部集成	YDP-S52B	
1	**ZA609700**	PEDAL BOX SUB ASSEMBLY		ペダルBOX木部集成	YDP-S52WH	
2	**ZA694500**	PEDAL ASSEMBLY SA		ペダルAss'y SA		
3	**WF355900**	TRUSS HEAD SCREW	4.0X16 MFZN2W3	小ネジ+TRUS		2
4	**WF744400**	BIND HEAD TAPPING SCREW-1	4.0X20 MFZN2W3	TP#1+BIND		6
5	**VD966101**	PEDAL CAUTION LABEL	Clavinova	ペダル注意書		
6	**WF745900**	TRUSS HEAD TAPPING SCREW-1	4.0X12 MFZN2W3	TP#1+TRUS		

＊: New Parts(新規部品)

PEDAL ASSEMBLY (C)

• Top view 1

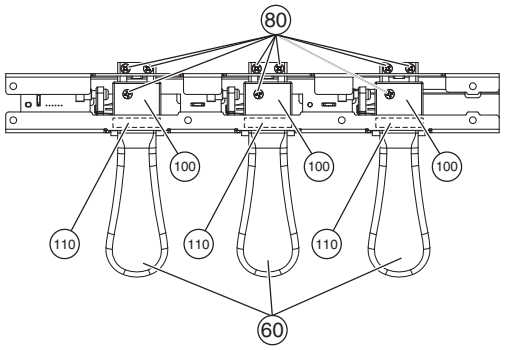

• Top view 2

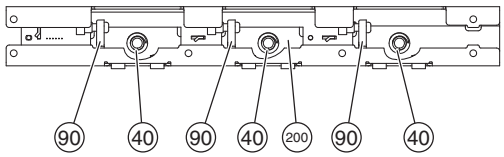

• Rear view 1

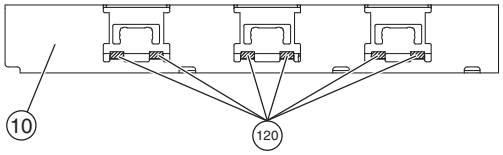

• Rear view 2

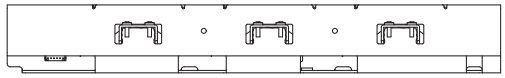

• Bottom view

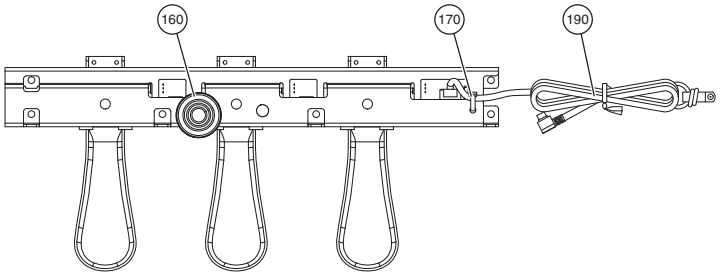

• Side view

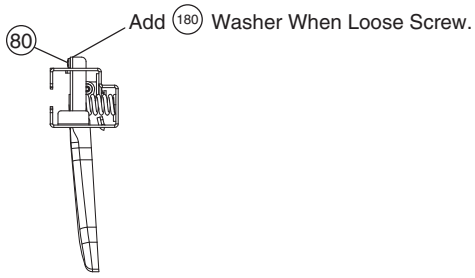

REF NO.	PART NO.	DESCRIPTION		部品名	REMARKS	QTY
		PEDAL ASSEMBLY SA		ペダルＡｓｓ'ｙ　ＳＡ	YDP-S52B/YDP-S52WH	
	ZA694500	PEDAL ASSEMBLY SA		ペダルＡｓｓ'ｙ　ＳＡ		
10	**--**	PEDAL FRAME		ペダルフレーム	(ZA69460)	
40	**ZA694700**	PEDAL SPRING		ペダルばね		3
60	**ZA694800**	PEDAL SET (C)		ペダルセット（Ｃ）		3
80	**WE774300**	BIND HEAD TAPPING SCREW-B	3.0X8 MFZN2W3	Ｂタイト＋ＢＩＮＤ		9
90	**WP016100**	ACTUATOR PEDAL BLACK		アクチュエータペダル		3
100	**--**	PEDAL GUIDE BLACK		ペダルガイド	(ZA69490)	3
110	**WP016301**	PEDAL FELT		ペダルフェルト		3
120	**--**	FELT	9X9XT2	フェルト	(ZA69510)	6
160	**WP934300**	COVERED ADJUSTER	30XM6X59	カバー付アジャスター		
170	**--**	INSULOK TIE	BK-1	インシュロックタイ	(CB06925)	
180	**WJ879000**	WASHER	3X6X0.5	ワッシャー		
190	**ZE761900**	PK CABLE	PK-LF	ＰＫケーブル－ＬＦ		
200	**ZA500100**	CIRCUIT BOARD	PEDAL	ＰＥＤＡＬシート		

＊：New Parts(新規部品)

■ KEYBOARD ASSEMBLY

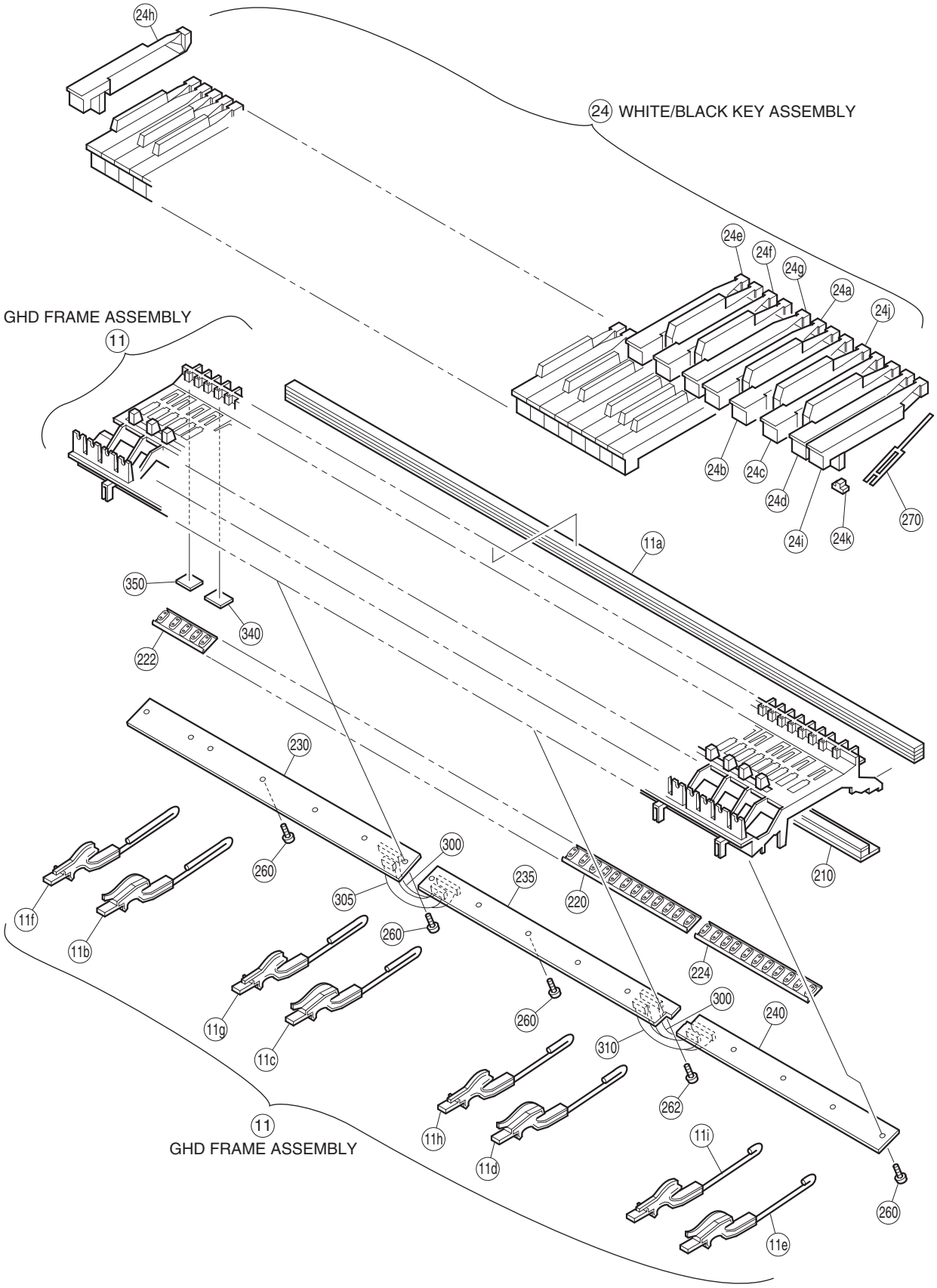

REF NO.	PART NO.	DESCRIPTION		部品名	REMARKS	QTY
		GHD LKS KEYBOARD ASSEMBLY	A88 IVORY ONLY WKEY	ＧＨＤ　ＬＫＳ鍵盤	YDP-S52B/YDP-S52WH	
	ZE153500	GHD LKS KEYBOARD ASSEMBLY	A88 IVORY ONLY WKEY	ＧＨＤ　ＬＫＳ鍵盤		
11	**--**	GHD FRAME ASSEMBLY	A88	ＧＨＤフレームＡｓｓ'ｙ	(VZ7054A)	
11a	**VU34210R**	STOPPER	1229X12X14.8T U88	ストッパーＵ８８		
11b	**VY82850R**	HAMMER ASSEMBLY WHITE KEY	W1 A-1-F1	ドーム用ハンマーＷ１		13
11b	**WK462100**	HAMMER ASSEMBLY WHITE KEY	W1 A-1-F1	ドーム用ハンマーＭＶ		13
11c	**VY82860R**	HAMMER ASSEMBLY WHITE KEY	W2 G1-E3	ドーム用ハンマーＷ２		13
11c	**WK462200**	HAMMER ASSEMBLY WHITE KEY	W2 G1-E3	ドーム用ハンマーＭＶ		13
11d	**VY82870R**	HAMMER ASSEMBLY WHITE KEY	W3 F3-D5	ドーム用ハンマーＷ３		13
11d	**WK462400**	HAMMER ASSEMBLY WHITE KEY	W3 F3-D5	ドーム用ハンマーＭＶ		13
11e	**VY82880R**	HAMMER ASSEMBLY WHITE KEY	W4 E5-C7	ドーム用ハンマーＷ４		13
11e	**WK462500**	HAMMER ASSEMBLY WHITE KEY	W4 E5-C7	ドーム用ハンマーＭＶ		13
11f	**VY82890R**	HAMMER ASSEMBLY BLACK KEY	B1 A#-1-F#1	ドーム用ハンマーＢ１		9
11f	**WK462600**	HAMMER ASSEMBLY BLACK KEY	B1 A#-1-F#1	ドーム用ハンマーＭＶ		9
11g	**VY82900R**	HAMMER ASSEMBLY BLACK KEY	B2 G#1-D#3	ドーム用ハンマーＢ２		9
11g	**WK462700**	HAMMER ASSEMBLY BLACK KEY	B2 G#1-D#3	ドーム用ハンマーＭＶ		9
11h	**VY82910R**	HAMMER ASSEMBLY BLACK KEY	B3 F#3-C#5	ドーム用ハンマーＢ３		9
11h	**WK462800**	HAMMER ASSEMBLY BLACK KEY	B3 F#3-C#5	ドーム用ハンマーＭＶ		9
11i	**VY82920R**	HAMMER ASSEMBLY BLACK KEY	B4 D#5-A#6	ドーム用ハンマーＢ４		9
11i	**WK462900**	HAMMER ASSEMBLY BLACK KEY	B4 D#5-A#6	ドーム用ハンマーＭＶ		9
24	**--**	WHITE KEY ASSEMBLY FGAB	FGAB	白鍵キーＡｓｓ'ｙ　ＦＧＡＢ	(WM9517C)	7
24	**--**	WHITE KEY ASSEMBLY CDE	CDE	白鍵キーＡｓｓ'ｙ　ＣＤＥ	(WM9517A)	7
24	**--**	WHITE KEY ASSEMBLY A'C'B	A'C'B	白鍵キーＡｓｓ'ｙ　Ａ'Ｃ'Ｂ	(WM9517E)	
24	**--**	BLACK KEY ASSEMBLY		黒鍵キーＡｓｓ'ｙ	(VU4318D)	36
24a	**WM953101**	WHITE KEY F	F	白鍵Ｆ人工象牙		7
24b	**WM953201**	WHITE KEY G	G	白鍵Ｇ人工象牙		7
24c	**WM953301**	WHITE KEY A	A	白鍵Ａ人工象牙		7
24d	**WM953401**	WHITE KEY B	B	白鍵Ｂ人工象牙		8
24e	**WM952801**	WHITE KEY C	C	白鍵Ｃ人工象牙		7
24f	**WM952901**	WHITE KEY D	D	白鍵Ｄ人工象牙		7
24g	**WM953001**	WHITE KEY E	E	白鍵Ｅ人工象牙		7
24h	**WM953501**	WHITE KEY A'	A'	白鍵Ａ'人工象牙		
24i	**WM953601**	WHITE KEY C'	C'	白鍵Ｃ'人工象牙		
24j	**VU102110**	BLACK KEY		黒鍵		36
24k	**WJ027800**	ACTUATE RUBBER, NES	GH,GHD,HE,HED,NWK	駆動ラバーＮＥＳ		88
24l	**AAX90710**	GREASE BLUE	G-1066Y 50g	グリス青		
210	**V7640100**	STOPPER L88-W	1239.5X28X10.1T	ストッパーＬ８８Ｗ		
220	**VY846700**	RUBBER CONTACT	OCTAVE 12KEYS D-C#	シーソードームＤ－Ｃ#	D0-C#1,D1-C#2,D2-C#3, D3-C#4,D4-C#5,D5-C#6	6
222	**VY846800**	RUBBER CONTACT	OCTAVE 5KEYS A-C#	シーソードームＡ－Ｃ#	A-1-C#0	
224	**VY846900**	RUBBER CONTACT	OCTAVE 11KEYS D-C	シーソードームＤ－Ｃ	D6-C7	
230	**V851480R**	CIRCUIT BOARD	GHD EBUS L	ＧＨＤ　ＥＢＵＳシートＬ		
235	**V852140R**	CIRCUIT BOARD	GHD M	ＧＨＤシート Ｍ		
240	**V852150R**	CIRCUIT BOARD	GHD H	ＧＨＤシート Ｈ		
260	**WF00100R**	BIND HEAD TAPPING SCREW-P	3.0X10 MFZN2W3	Ｐタイト＋ＢＩＮＤ		16
262	**WF76550R**	PW HEAD TAPPING SCREW-P	3.0X10 MFZN2W3	Ｐタイト＋ＰＷＨ		
270	**V2798500**	SPRING R	GH WHITE/BLACK	スプリング Ｒ		88
291	**V6274301**	GREASE	G-1006Y 50g	グリス		
300	**V852050R**	CABLE	12P L=106 P=2	ケーブル		2
305	**V7766800**	CABLE	9P L=106 P=2	ケーブル		
310	**V852100R**	CABLE	4P L=106 P=2	ケーブル		
340	**VV467900**	STOPPER FELT A	35.5X20	ストッパーサポートＡ		7
350	**VV468100**	STOPPER FELT B	24X20	ストッパーサポートＢ		12
		TOOL		工具		
	TX000671	ROD		ロッド		

＊：New Parts(新規部品)

■ HP JACK ASSEMBLY

• Side view

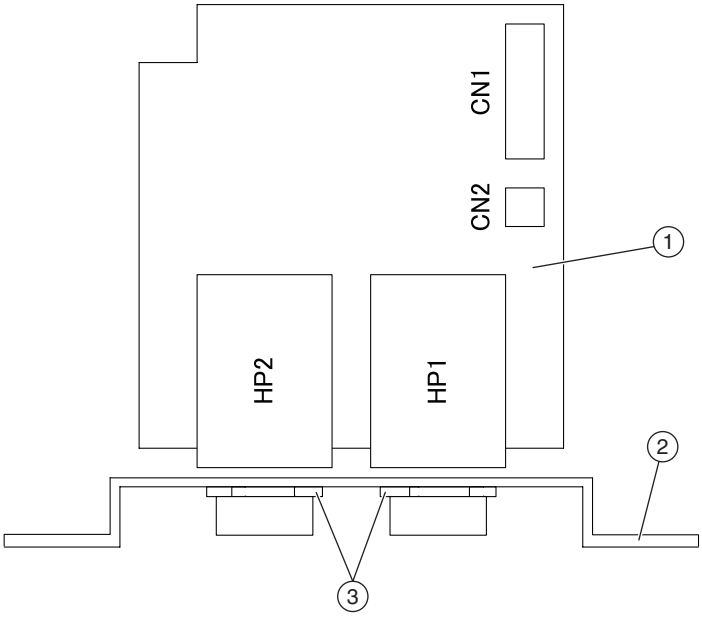

REF NO.	PART NO.	DESCRIPTION		部品名	REMARKS	QTY
		HEADPHONE JACK ASSEMBLY		ＨＰジャックＡｓｓ’ｙ	YDP-S52B/YDP-S52WH	
	ZD539600	HEADPHONE JACK ASSEMBLY		ＨＰジャックＡｓｓ’ｙ		
1	**--**	CIRCUIT BOARD	HP	ＨＰシート	(ZD53950)	
1	**--**	CIRCUIT BOARD	HP	ＨＰシート	(ZN11260)	
2	**--**	HEADPHONE PLATE		Ｈ．Ｐ取付金具	(WW02410)	
3	**WF55990R**	HEXAGONAL NUT	M12.0X14X2 P=1.0	ナット特殊		2

＊: New Parts(新規部品)

■ ELECTRICAL PARTS

DM

	REF NO.	PART NO.	DESCRIPTION		部品名	REMARKS	QTY
			ELECTRICAL PARTS		電気部品	YDP-S52B/YDP-S52WH	
		ZA500800	CIRCUIT BOARD	DCPJ	DCPJシート	(ZA38000)(YE107D0)	
		ZA501100	CIRCUIT BOARD	RELAY	RELAYシート	(ZA38000)(YE107D0)	
		ZA501200	CIRCUIT BOARD	USB	USBシート	(ZA38000)(YE107D0)	
*		**ZM361200**	CIRCUIT BOARD	DM	DMシート	(ZM36110)(YD988D0)	
		V851480R	CIRCUIT BOARD	GHD EBUS L	GHD EBUSシートL	(XZ138D0)	
		V658820R	CIRCUIT BOARD	MK SUB	MKサブシート	(V658810)(XZ142B0)	
		V852150R	CIRCUIT BOARD	GHD H	GHDシートH	(X2218A0)	
		V852140R	CIRCUIT BOARD	GHD M	GHDシートM	(X2217A0)	
		--	CIRCUIT BOARD	HP	HPシート	(ZD53950)(ZD50430)	
		--	CIRCUIT BOARD	HP	HPシート	(XQ389C0)(XQ390A0) (ZN11260)(ZN11220) (YG487A0)	
		ZA500100	CIRCUIT BOARD	PEDAL	PEDALシート	(WZ72500)(YD982B0)	
		VU65910R	CIRCUIT BOARD	PL	PLシート	(VU65900)(XR898A0)	
		ZA500400	CIRCUIT BOARD	PNL	PNLシート	(ZA50220)(YE108C0)	
		ZA500500	CIRCUIT BOARD	PNR	PNRシート	(ZA50220)(YE108C0)	
		ZA500800	CIRCUIT BOARD	DCPJ	DCPJシート	(ZA38000)(YE107D0)	
		ZA501100	CIRCUIT BOARD	RELAY	RELAYシート	(ZA38000)(YE107D0)	
		ZA501200	CIRCUIT BOARD	USB	USBシート	(ZA38000)(YE107D0)	
	C4	**UR749680**	ELECTROLYTIC CAPACITOR	6800 25.0V FORM.	ケミコン		
	CN104	**V6802600**	USB JACK	USB 4P SE	USBジャック	USB TO HOST	
	D9	**V9917100**	DIODE	S3V60-5004P15 FOR.	ダイオード		
	JK1	**V487480R**	DIN CONNECTOR	DIN JACK 6P MD-S6130	ミニDINコネクタ	TO PEDAL	
⚠	JK2	**V7509101**	DC CONNECTOR	DJ-0735D 029	電源コネクタ	DC-IN 16V	
	L2	**V2993400**	CHOKE COIL	20uH R-5C TE	チョークコイル		
	-5	**V2993400**	CHOKE COIL	20uH R-5C TE	チョークコイル		
⚠	L6	**ZC240800**	LINE FILTER	UF1815SG-800Y3R0-0	ラインフィルター		
	L7	**V2993400**	CHOKE COIL	20uH R-5C TE	チョークコイル		
	L101	**V2993400**	CHOKE COIL	20uH R-5C TE	チョークコイル		
⚠	TH1	**V8132900**	FUSE	MF-R250-AP-10	マルチヒューズ		
⚠	TH1	**VV45800R**	PROTECTOR SWITCH	RUEF250 2.50A 30V	ポリスイッチ		
	TR3	**ZC633500**	TRANSISTOR	2SB1568	トランジスタ 2SB		
	TR4	**VV556400**	TRANSISTOR	2SC2412K Q,R,S TP	トランジスタ		
*		**ZM361200**	CIRCUIT BOARD	DM	DMシート	(ZM36110)(YD988D0)	
	IC3	**YD113A00**	IC	RP131H331D-T1-FE	IC	REGULATOR +3.3V	
	IC5	**YD932A00**	IC	RP131H121D-T1-FE	IC	REGULATOR +1.2V	
	IC401	**X9347A00**	IC	R3112N291A-TR-FE	IC	VOLTAGE DETECTOR	
	IC402	**X6611A00**	IC	SN74LV123APWR	IC	MULTIVIBRATOR	
	IC402	**X8506A02**	IC	TC74VHC123AFT EL,K	IC		
	IC403	**XY806A0R**	IC	TC7WH14FU(TE12L,F)	IC	INVERTER	
	IC404	**XY806A0R**	IC	TC7WH14FU(TE12L,F)	IC	INVERTER	
	IC405	**X2377A0R**	IC	SN74LV21APWR	IC	AND	
	IC405	**X5542A00**	IC	TC74VHC21FT(EL)	IC		
	C5	**UF14810R**	ELECTROLYTIC CAPACITOR(CHIP)	100 25V	チップケミコン		
	C22	**UF038100**	ELECTROLYTIC CAPACITOR(CHIP)	100 16V	チップケミコン		
	C27	**UF038100**	ELECTROLYTIC CAPACITOR(CHIP)	100 16V	チップケミコン		
	C101	**WG251600**	CERAMIC CAPACITOR (CHIP)	4.7 6.3V K RECT.	チップセラ		
	C111	**WC37000R**	ELECTROLYTIC CAPACITOR(CHIP)	220.00 35.0V	チップケミコン UD		
	C118	**UF06610R**	ELECTROLYTIC CAPACITOR(CHIP)	1 50V	チップケミコン		
	C119	**UF06610R**	ELECTROLYTIC CAPACITOR(CHIP)	1 50V	チップケミコン		
	C141	**UF038100**	ELECTROLYTIC CAPACITOR(CHIP)	100 16V	チップケミコン		
	C203	**WP882000**	CERAMIC CAPACITOR (CHIP)	10U 6.3V K RECT.	チップセラ		
	IC2	**YD832A00**	IC	R1245K003G-TR	IC	DC-DC CONVERTER	
	IC101	**--**	IC	R8A02042BG	IC	SWX08 (YC479A0)	
	IC102	**YC681A00**	IC	WM8524GEDT/R	IC	DAC	
	IC102	**YC681B00**	IC	WM8524CGEDT/R	IC		
	IC103	**YD652A00**	IC	YDA164C-QZE2	IC	POWER AMPLIFIER 20Wx2	
	IC151	**YC967A00**	IC	MAX9820ETB+T 95MW	IC	HEADPHONE AMP	
	IC301	**X3584E00**	IC	W9812G6JH-6	IC	WORK SDRAM 128M	
	IC301	**X6970D00**	IC	M12L128168A-7TG2L	IC		
	IC301	**X6970E00**	IC	M12L128168A-6TG2N	IC		
*	IC302	**YG404B00**	IC	MX29LV640EBTI-70G	IC	FLASH ROM 64M PROGRAM	
*	IC304	**YG405B00**	IC	MX29GL128ELT2I-90G	IC	FLASH ROM 128M WAVE	
	IC305	**X2590C00**	IC	W9816G6IH-7	IC	DSP SDRAM 16M	
	IC305	**X5693D00**	IC	M12L16161A-7TG2Q	IC		
	X201	**WH521200**	QUARTZ CRYSTAL UNIT	48MHz SG-310SCF	水晶振動器		
	X201	**WM725500**	RESONATOR QUARTZ	48MHz DSO321SR	水晶発振器		

＊: New Parts(新規部品)

DM,GHD,MK,GHD,HP,PEDAL,PL,PNL

REF NO.	PART NO.	DESCRIPTION		部品名	REMARKS	QTY
X301	**WM135200**	RESONATOR QUARTZ	16.9344MHz DSX321G	水晶振動子		
ZD201	**VU172200**	ZENER DIODE	UDZS6.8BTE-17 6.8V	ツェナーダイオード		
	V851480R	CIRCUIT BOARD	GHD EBUS L	GHD EBUSシートL	(XZ138D0)	
	V658820R	CIRCUIT BOARD	MK SUB	MKサブシート	(V658810)(XZ142B0)	
	--	FELT CLOTH		不織布	(VU45960)	
C1	**UI52747R**	ELECTROLYTIC CAPACITOR	47.00 10.0V	ケミコン		
D1	**VB941200**	DIODE	1SS133,1SS176 TE-5	ダイオード		
-71	**VB941200**	DIODE	1SS133,1SS176 TE-5	ダイオード		
	V658820R	CIRCUIT BOARD	MK SUB	MKサブシート	(V658810)(XZ142B0)	
IC001	**X003120R**	IC	UPD780031AYGK-N04	IC	E-LKS	
X0001	**V615050R**	CERAMIC RESONATOR	8.38MHz EFOS8384E5	セラミック振動子		
X0001	**WU956300**	CERAMIC RESONATOR	8.38MHz CSTCC8M38G56	セラミック振動子		
	V852150R	CIRCUIT BOARD	GHD H	GHDシートH	(X2218A0)	
	V8521600	FELT CLOTH		不織布		
D61	**VB941200**	DIODE	1SS133,1SS176 TE-5	ダイオード		
-108	**VB941200**	DIODE	1SS133,1SS176 TE-5	ダイオード		
	V852140R	CIRCUIT BOARD	GHD M	GHDシートM	(X2217A0)	
	--	FELT CLOTH		不織布	(V846990)	
D1	**VB941200**	DIODE	1SS133,1SS176 TE-5	ダイオード		
-60	**VB941200**	DIODE	1SS133,1SS176 TE-5	ダイオード		
	--	CIRCUIT BOARD	HP	HPシート	(ZD53950)(ZD50430) (XQ389C0)(XQ390A0)	
	--	CIRCUIT BOARD	HP	HPシート	(ZN11260)(ZN11220) (YG487A0)	
C0001	**--**	JUMPER WIRE	0.55	ジャンパー線	(VA07890)	
C0006	**--**	JUMPER WIRE	0.55	ジャンパー線	(VA07890)	
C0007	**--**	JUMPER WIRE	0.55	ジャンパー線	(VA07890)	
FL001	**GE300670**	FERRITE BEAD	BL02RN2R1P1A TATET	フェライトビーズ		
FL002	**GE300670**	FERRITE BEAD	BL02RN2R1P1A TATET	フェライトビーズ		
FL003	**--**	JUMPER WIRE	0.55	ジャンパー線	(VA07890)	
FL004	**GE300670**	FERRITE BEAD	BL02RN2R1P1A TATET	フェライトビーズ		
FL005	**GE300670**	FERRITE BEAD	BL02RN2R1P1A TATET	フェライトビーズ		
FL006	**--**	JUMPER WIRE	0.55	ジャンパー線	(VA07890)	
HP001	**LB101870**	PHONE CONNECTOR	YKB21-5006	ホーンコネクタ	PHONES	
HP001	**WJ306200**	PHONE CONNECTOR	MSJ-064-15A B AG	ホーンコネクタ		
HP002	**LB101870**	PHONE CONNECTOR	YKB21-5006	ホーンコネクタ	PHONES	
HP002	**WJ306200**	PHONE CONNECTOR	MSJ-064-15A B AG	ホーンコネクタ		
R0001	**VC728200**	METAL OXIDE FILM RESISTOR	10.0 1W J	酸化金属被膜抵抗		
-0004	**VC728200**	METAL OXIDE FILM RESISTOR	10.0 1W J	酸化金属被膜抵抗		
R0005	**--**	JUMPER WIRE	0.55	ジャンパー線	(VA07890)	
WH001	**--**	GND WIRE	1P GND	GND線	(ZE91890)	
	ZA500100	CIRCUIT BOARD	PEDAL	PEDALシート	(WZ72500)(YD982B0)	
VR1	**WN154400**	ROTARY VARIABLE RESISTOR	B 10.0K RK09Y11L00	ロータリーVR1連		
VR2	**WN154400**	ROTARY VARIABLE RESISTOR	B 10.0K RK09Y11L00	ロータリーVR1連		
VR3	**WN154400**	ROTARY VARIABLE RESISTOR	B 10.0K RK09Y11L00	ロータリーVR1連		
	VU65910R	CIRCUIT BOARD	PL	PLシート	(VU65900)(XR898A0)	
LED1	**VD18000R**	LED RED	SLZ-190B-03-T2	LED		
LED1	**WM285600**	LED RED	HFR223P-BW12	LED		
	ZA500400	CIRCUIT BOARD	PNL	PNLシート	(ZA50220)(YE108C0)	
	ZA500500	CIRCUIT BOARD	PNR	PNRシート	(ZA50220)(YE108C0)	
VR1	**VQ67050R**	ROTARY VARIABLE RESISTOR	B 10K RK11K1130A0M	ロータリーボリューム	MASTER VOLUME	
* VR1	**ZK790600**	ROTARY VARIABLE RESISTOR	B 10.0K XV012113YN	ロータリーボリューム		
LD1	**WP377400**	LED GREEN	SLR-343MGT32	LED	+/R	
LD2	**WP377400**	LED GREEN	SLR-343MGT32	LED	-/L	
LD3	**WE864300**	LED RED	SLR-343VCT32	LED	REC	
LD4	**WP377400**	LED GREEN	SLR-343MGT32	LED	PLAY	
SW1	**WG31840R**	TACT SWITCH	SKRGAMD010	タクトSW	DEMO/SONG	
SW2	**WG31840R**	TACT SWITCH	SKRGAMD010	タクトSW	PIANO/VOICE	
SW3	**WG31840R**	TACT SWITCH	SKRGAMD010	タクトSW	METRONOME	
SW4	**WG31840R**	TACT SWITCH	SKRGAMD010	タクトSW	+/R	
SW5	**WG31840R**	TACT SWITCH	SKRGAMD010	タクトSW	-/L	
SW6	**WG31840R**	TACT SWITCH	SKRGAMD010	タクトSW	REC	

*: New Parts(新規部品)

PNL

REF NO.	PART NO.	DESCRIPTION		部品名	REMARKS	QTY
SW7	**WG31840R**	TACT SWITCH	SKRGAMD010	タクトSW	PLAY	
SW8	**WG31840R**	TACT SWITCH	SKRGAMD010	タクトSW	POWER	
*	**YG697A00**	LOUD SPEAKER	6X12cm 4ohm 10W	スピーカ		

*: New Parts(新規部品)

■ YDP-S52B/YDP-S52WH BLOCK DIAGRAM

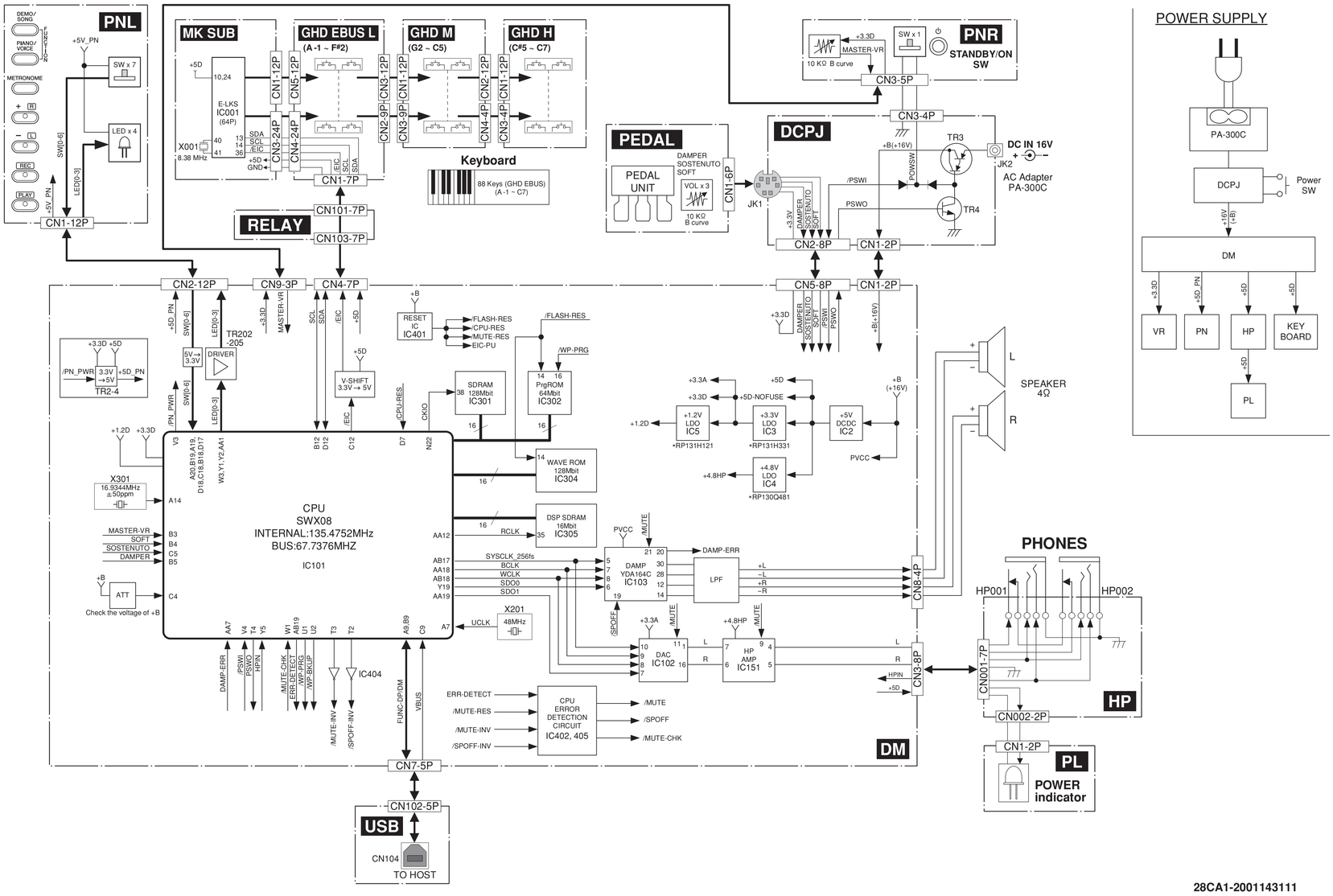

■ YDP-S52B/YDP-S52WH CIRCUIT BOARD LAYOUT & WIRING

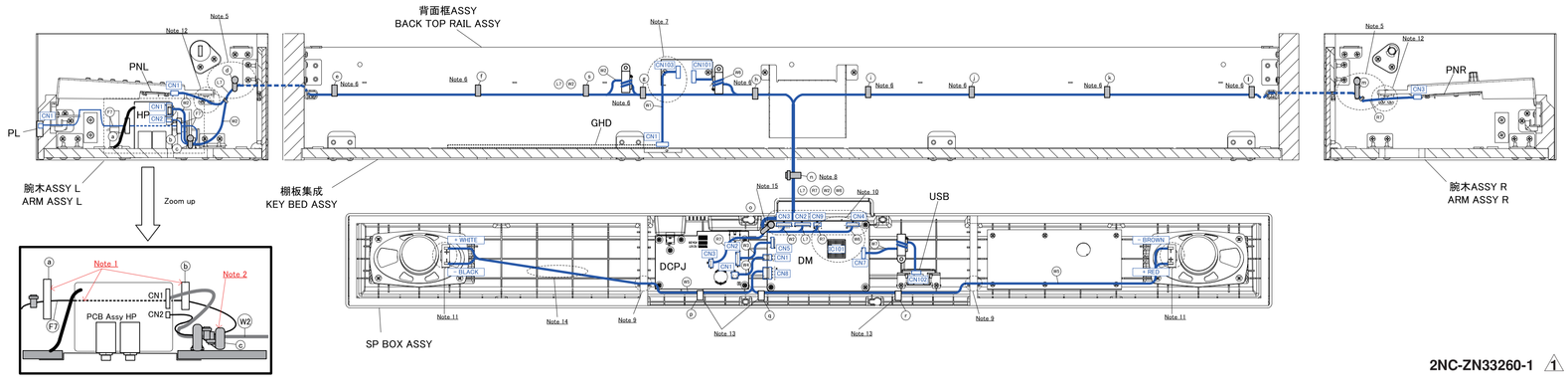

2NC-ZN33260-1 ⚠1

: インシュロックタイ Insulation Lock Tie
: フィラメントテープ Filament Tape
: ビニタイ Cord Binder
: 束線止め Cable Holder

Note 1 :
HPシートの部品端子に触れないよう、たるませず (F7) を腕木に添わせてフィラメントテープ (a)(b) で固定する事。
(F7) のインシュロックタイの上に (a) を貼らない事。
(F7) is fixed to along Side Arm with Filament tape (a)(b).
Then, don't loose to not touch electric parts leads of PCB ASSY HP.
Do not put (a) on insulation Lock Tie of (F7).

Note 2 :
下図のように、束線止め (c) で (F7) と (W2) のインシュロックタイを挟み込むように固定する事。
また、鍵盤ハンマーに当たらない様に調節する事。
Insulation Lock Tie of (F7) and (W2) must be fixed like pinching by (c) as following figures.
Modify the position of them not to touch the hammer of the keyboard.

ロケーション Location	部品番号 Part No.	束線 Assembly	接続先 Destination		固定位置 Fixed Position	備考 Remarks
F7	(WW78780)*1	PL	PL - CN1 *2	HP - CN2 *2	a b c	2P L=300
L7	(ZA90160)*1	PNL	PNL - CN1 *2	DM - CN2 *2	d e f g h n o	12P L=940
R7	(ZF32260)*1	PNR2	PNR - CN3 *2	DM - CN9 *2	m l k j i n o	5P-4P/3P L=980
				DCPJ - CN3 *2		
W1	WF42610	KB	GHD - CN1 *3	RELAY - CN103 *3	–	7P L=350
W2	(ZA90190)*1	HP	HP - CN1 *2	DM - CN3 *2	c d e f g h n o	7P L=1100
W3	(ZA90200)*1	PDERP	DCPJ - CN2 *2	DM - CN5 *2	–	9P L=90
W4	(ZA90210)*1	DC	DCPJ - CN1 *2	DM - CN1 *2	–	2P L=80
W5	(ZA90220)*1	SP	DM - CN8 *2	SP Rch (SP(+,-)) *4	q r	4P-2P/2P L=580
				SP Lch (SP(+,-)) *5	p	
W6	(ZE60620)*1	EBUS	RELAY - CN101 *2	DM - CN4 *2	h n o	7P L=500
W7	(ZA90240)*1	USB	DM - CN7 *2	USB - CN102 *2	–	5P L=300

2NC-ZN33260-2 ⚠2

*1 : This parts with "( )" in "Part No." are not available as service parts.
*1 : 上記束線のうち、部品番号に "( )" がついている部品は、サービス部品として準備されていません。
*2 : Red wire is adjusted to pin 1 mark (▲ mark).
*2 : 赤色線材が 1 ピン側 (▲マーク) です。
*3 : Blue wire is adjusted to pin 1 mark (▲ mark).
*3 : 青色線材が 1 ピン側 (▲マーク) です。
*4 : Manual solserring with Orange wire: +, Brown wire: -
*4 : 手半田　赤色線材：＋側、茶色線材：－側
*5 : Manual solserring with Black wire: +, White wire: -
*5 : 手半田　黒色線材：＋側、白色線材：－側

DM

SWX08 1/7

SWX08 2/7

SWX08 3/7

SWX08 4/7

SWX08 5/7

SWX08 6/7

Address / Data Bus

SDRAM 128M

FLASH ROM 64M PROGRAM

FLASH ROM 128M WAVE

POWER AMPLIFIER 20Wx2

Speakers

L

R

HEADPHONE AMP

DAC

VOLTAGE DETECTOR

INVERTER

MULTIVIBRATOR

AND

INVERTER

DC-DC CONVERTER

REGULATOR +3.3V

Maximum rating: 1000mA
Estimated load: 400mA

REGULATOR +1.2V

Maximum rating: 1000mA
Estimated load: 100mA

SDRAM 16M

TEST POINT

to HP-CN1 <Page 2 M2>

to PNL-CN1 <Page 2 B5>

to RELAY-CN101 <Page 3 A2>

to PNR-CN3 <Page 2 B3>

to USB-CN102 <Page 2 F9>

to DCPJ-CN2 <Page 2 F6>

to DCPJ-CN1 <Page 2 F4>

28CC1-2001143112

Notation for Circuit Diagrams
1. How to identify inter-circuit connectors.

■WARNING
Components having special characteristics are marked ⚠and must be replaced with parts having specification equal to those originally installed.
⚠印の部品は、安全を維持するために重要な部品です。
交換する場合は、安全の為に必ず指定の部品を御使用ください。

■YDP-S52B/YDP-S52WH OVERALL CIRCUIT DIAGRAM 2/3 (DCPJ, HP, PEDAL, PNL, PNR, PL, USB)

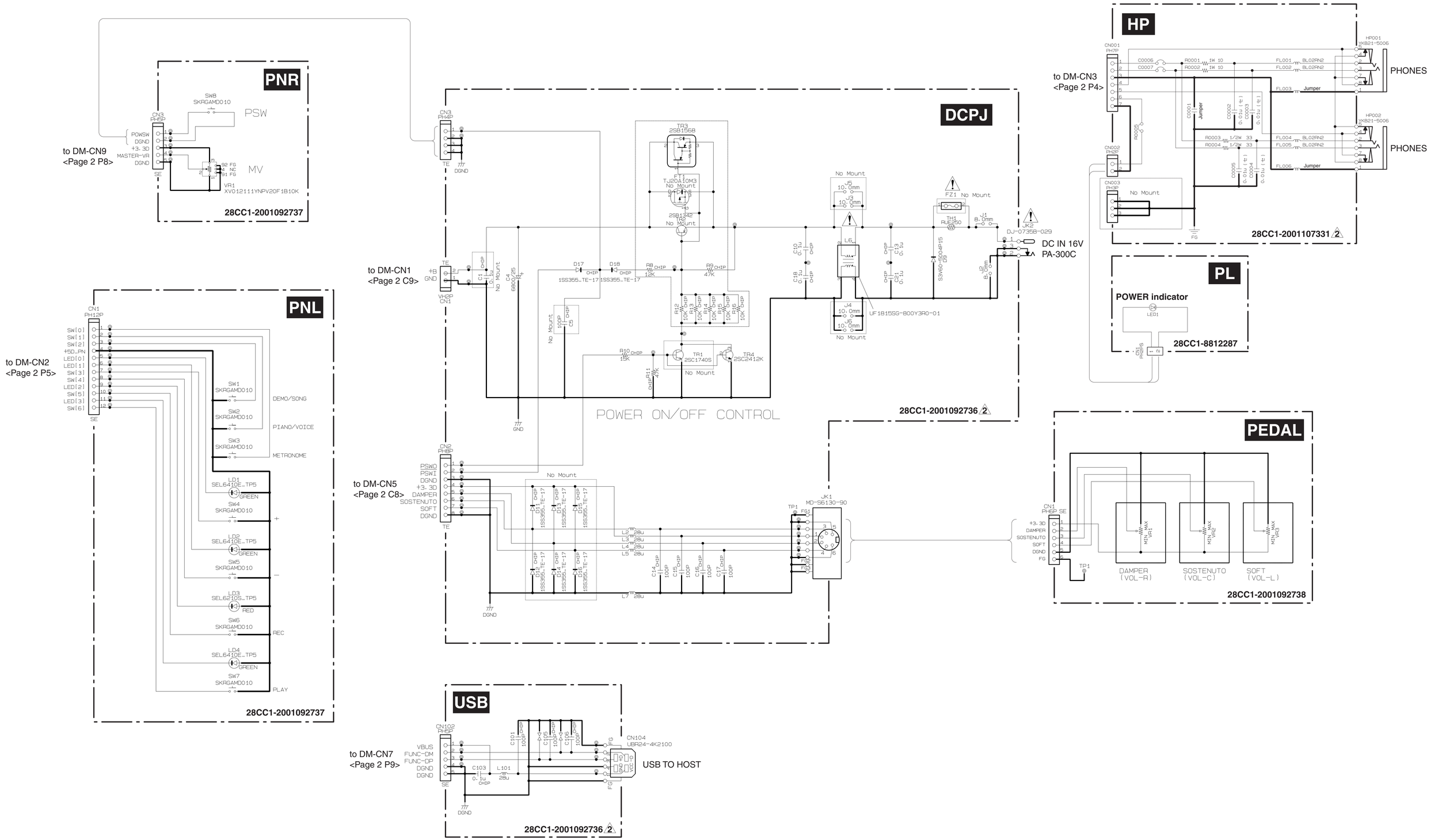

■WARNING
Components having special characteristics are marked ⚠ and must be replaced with parts having specification equal to those originally installed.
⚠ 印の部品は、安全を維持するために重要な部品です。
交換する場合は、安全の為に必ず指定の部品を御使用ください。

■YDP-S52B/YDP-S52WH OVERALL CIRCUIT DIAGRAM 3/3 (GHD EBUS L, GHD H, GHD M, MK SUB, RELAY)

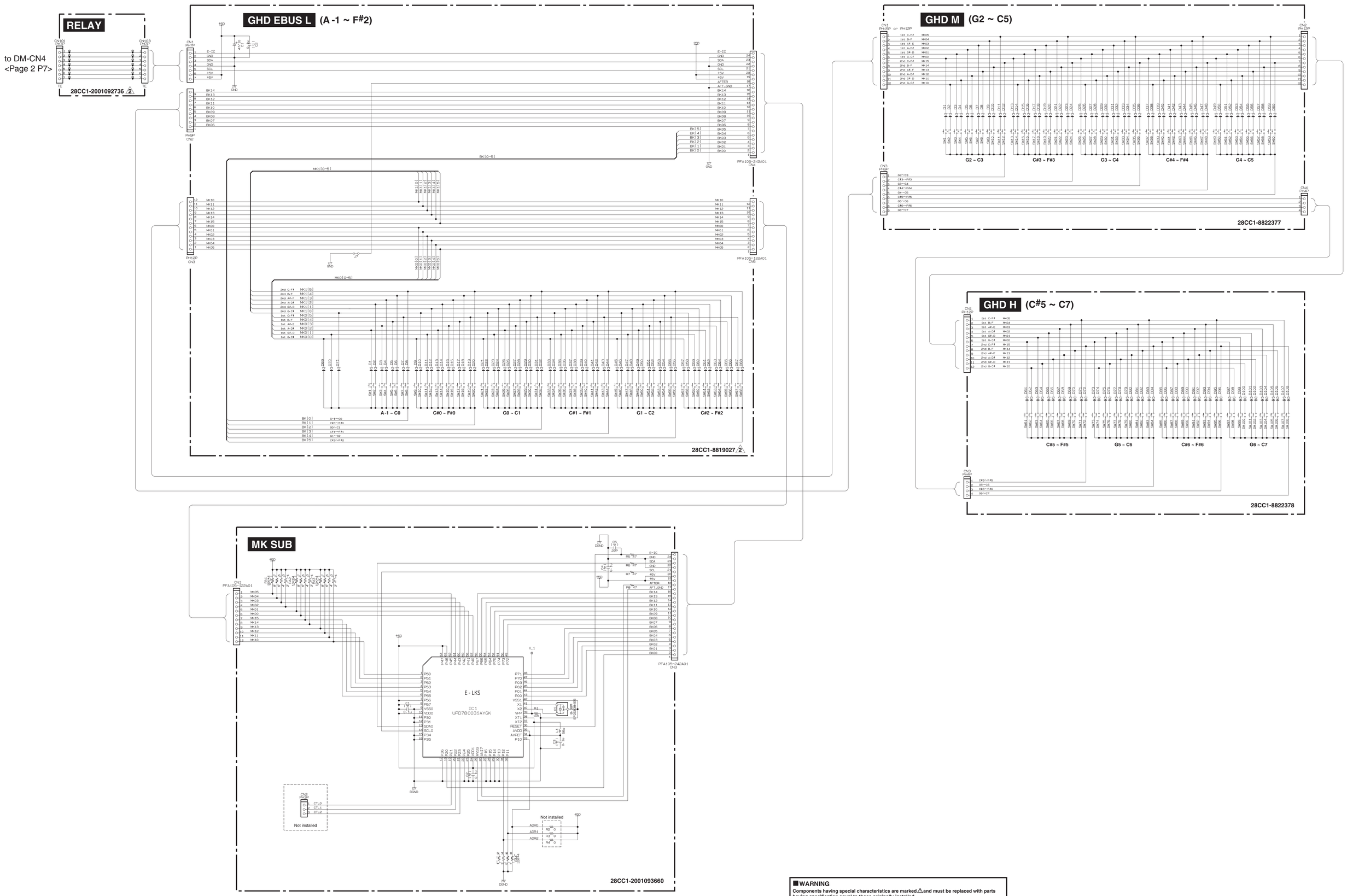

■WARNING
Components having special characteristics are marked ⚠ and must be replaced with parts having specification equal to those originally installed.
⚠ 印の部品は、安全を維持するために重要な部品です。
交換する場合は、安全の為に必ず指定の部品を御使用ください。