ELECTRIC BASS

TRB1005/TRB1005F/TRB1006

SERVICE MANUAL



TRB1005



TRB1005F



TRB1006

CONTENTS

OVERALL ASSEMBLY 2/4/6
ELECTRICAL PARTS 8
CIRCUIT BOARD 10
CIRCUIT DIAGRAM 11
WIRING 12
SPECIFICATIONS 13

EG 011716

YAMAHA

HAMAMATSU, JAPAN

Copyright (c) Yamaha Corporation. All rights reserved.

PDF-K851 '03.12

OVERALL ASSEMBLY

• TRB1005

E17 Bridge Assembly:
SUNG-IL TRB-5 Black (QC781600)

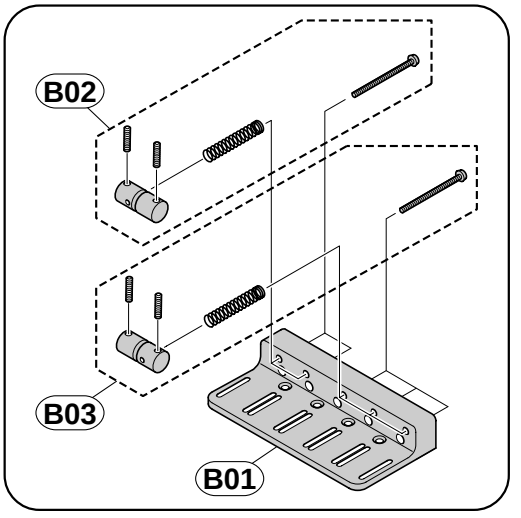

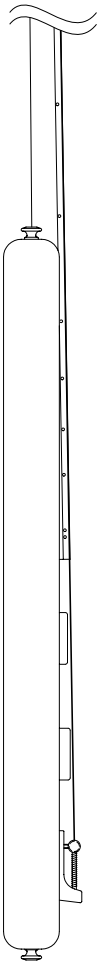

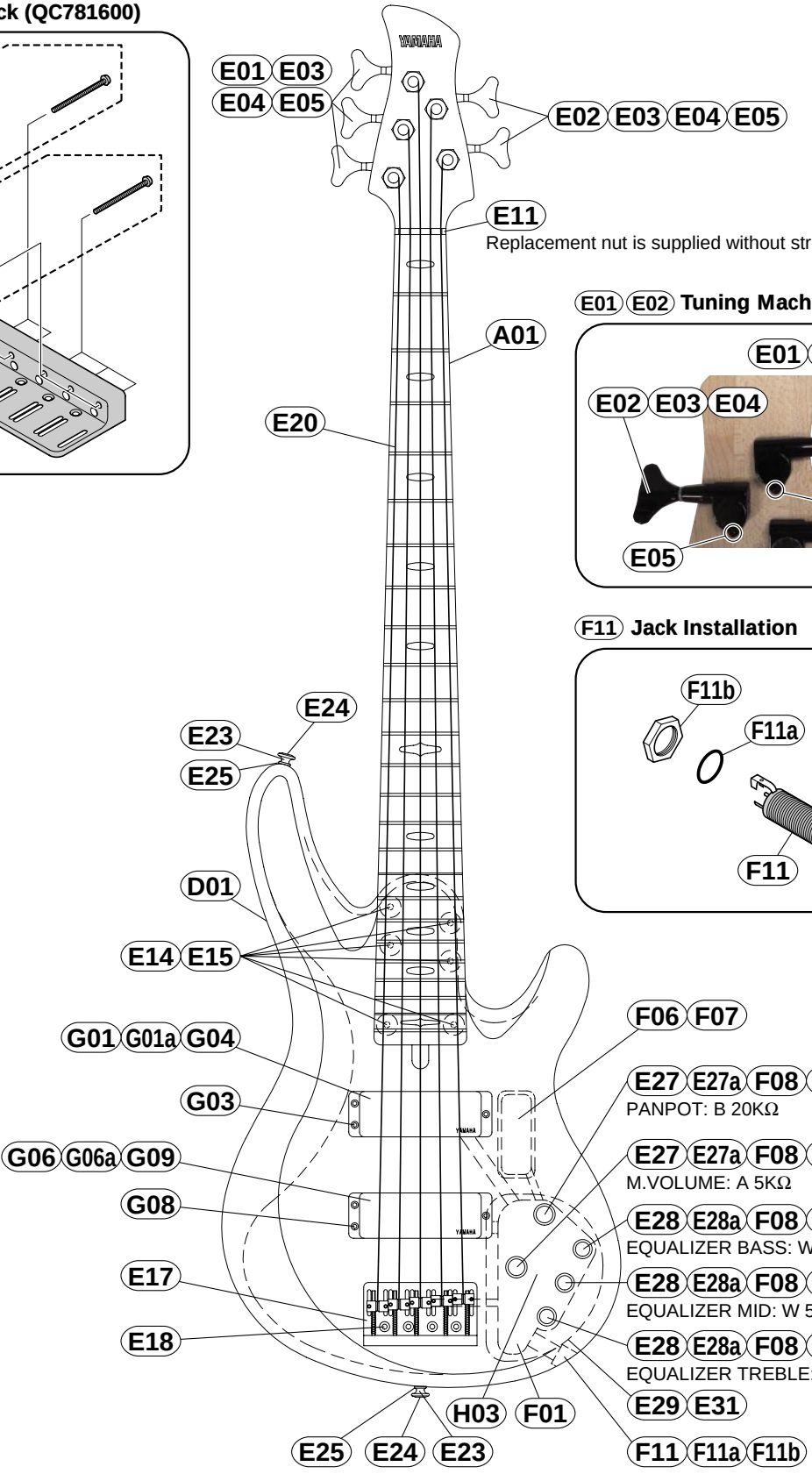

E01 E02 Tuning Machine Assembly

F11 Jack Installation

• TRB1005

	REF NO.	PART NO.	DESCRIPTION			REMARKS	QTY	RANK
			OVERALL ASSEMBLY			TRB1005		
*	A01	**AAX57500**	Neck Assembly			TBL		
*	A01	**AAX57510**	Neck Assembly			TDR		
*	A01	**AAX53320**	Neck Assembly			NT		
	D01	**--**	Body					
*	E01	**QC798900**	Tuning Machine Assembly	GB100-D01 Right		Black	3	
*	E02	**QC798800**	Tuning Machine Assembly	GB100-D01 Left		Black	2	
	E03	**--**	Bushing	M9X15mm (Black)		with Tuning Machine Ass'y	5	
	E04	**--**	Spacer	M14.3X1.3mm (Black)		with Tuning Machine Ass'y	5	
	E05	**--**	Round Head Wood Screw	2.1X10 (Black)		with Tuning Machine Ass'y	5	
*	E11	**QC799000**	Nut	Bone 43mm				
*	E14	**QC806600**	Neck Joint Bushing	HB009 M15X3t		Black	6	
	E15	**VI825000**	Oval Head Tapping Screw	5.0X40 FCM3BL		Black	6	01
*	E17	**QC781600**	Bridge Assembly	SUNG-IL TRB-5 P=18		Black		
	E18	**03706590**	Oval Head Wood Screw	3.5X25 FCM3BL		Black	4	01
	E20	**--**	Strings	D'Addario EXL170-5		1set		
	E23	**QC656200**	Strap Button	AES-type (Black)			2	03
*	E24	**EN240080**	Oval Head Tapping Screw	4.0X30 FCM3BL		Black	2	
	E25	**VB793700**	Spacer	Felt (Black)			2	01
*	E27	**QC806800**	Control Knob (Large)	JAYU H-1 (Black)		M.VOLUME,PANPOT	2	
	E27a	**--**	Set Screw	M4.0X5 (Black)			2	
*	E28	**QC806900**	Control Knob (Small)	JAYU H-4 (Black)		BASS,MID,TREBLE	3	
	E28a	**--**	Set Screw	M3.0X3 (Black)			3	
	E29	**QC425800**	Back Cover	Electrical (Black)				08
	E31	**03744160**	Oval Head Tapping Screw	3.0X12 FCM3BL		Black	6	01
	F01	**QC558500**	Circuit Board	3-BAND EQ. Control				21
*	F06	**QC800100**	Box for Dry Cell	SJL CASE (Black)		with Connector		
	F07	**03706220**	Oval Head Wood Screw	2.1X10 FCM3BL		Black	2	01
	F08	**--**	Hexagonal Nut			with Volume	5	
	F09	**--**	Flat Washer			with Volume	5	
	F10	**--**	Toothed Lock Washer			with Volume	5	
*	F11	**QC800200**	Output Jack	CJ-ST/C (Black)		with Connector		
	F11a	**--**	Rubber Ring	M12X1.5mm				
	F11b	**--**	Hexagonal Nut	M11X2.4mm (Chrome)				
	G01	**QC428900**	Pickup Assembly	D/C		FRONT		22
	G01a	**--**	Pickup Cover	Black				
	G03	**VJ388800**	Pan Head Tapping Screw	2.6X35 FCM3BL		Black	3	02
	G04	**QC232300**	Pickup Cushion	Black			2	02
	G06	**QC429000**	Pickup Assembly	D/C		REAR		22
	G06a	**--**	Pickup Cover	Black				
	G08	**VJ388800**	Pan Head Tapping Screw	2.6X35 FCM3BL		Black	3	02
	G09	**QC232300**	Pickup Cushion	Black			2	02
	H01	**--**	Accessory Unit					
		QC583200	Cord	CABLE(2.5BK)				05
		TX900780	Wrench	#1.5				03
		AA815290	Wrench	#2				01
		AA821010	Wrench	#4				01
	H02	**--**	Battery	006P 9V Dry Cell				
*	H03	**QC778900**	Instruction Sheet					
*		**QC781600**	Bridge Assembly	SUNG-IL TRB-5 P=18		Black		
*	B01	**AAX53360**	Bridge Base	Black				
*	B02	**AAX53370**	Bridge Piece Assembly	30mm, 3.0X40, M3X12		1,2 Strings (Black)	2	
*	B03	**AAX53390**	Bridge Piece Assembly	25mm, 3.0X40, M3X12		3-5 Strings (Black)	3	

*: New Parts

RANK: Japan only

OVERALL ASSEMBLY

• TRB1005F

E17 Bridge Assembly:
SUNG-IL TRB-5 Black (QC781600)

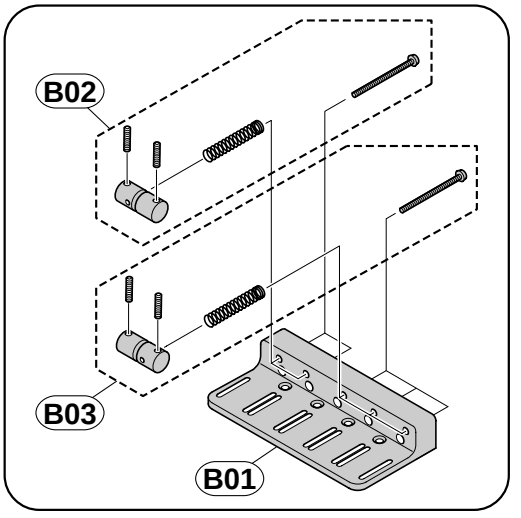

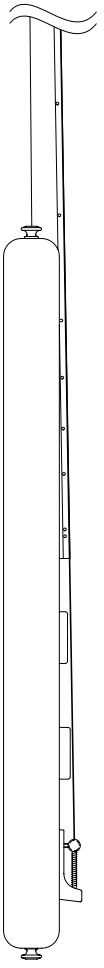

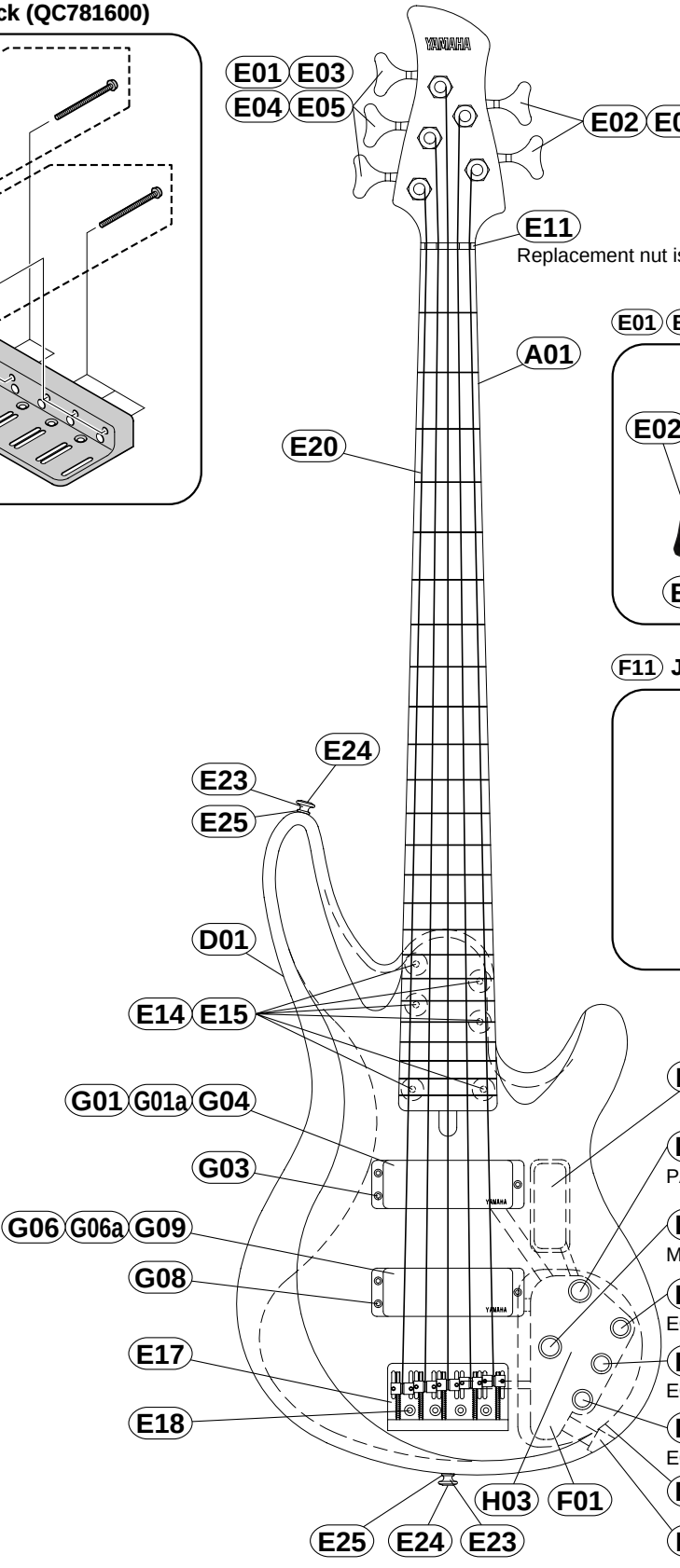

Replacement nut is supplied without string slot.

E01 E02 Tuning Machine Assembly

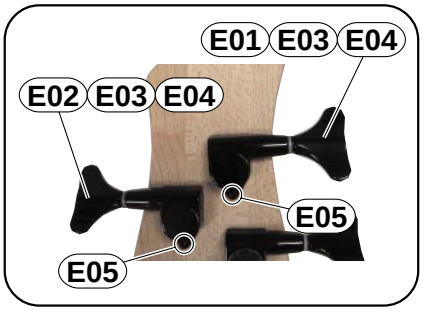

F11 Jack Installation

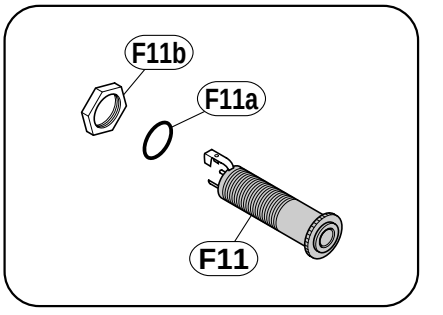

• TRB1005F

	REF NO.	PART NO.	DESCRIPTION			REMARKS	QTY	RANK
			OVERALL ASSEMBLY			TRB1005F		
*	A01	**AAX57520**	Neck Assembly			TBL		
*	A01	**AAX53330**	Neck Assembly			NT		
	D01	**--**	Body					
*	E01	**QC798900**	Tuning Machine Assembly	GB100-D01 Right		Black	3	
*	E02	**QC798800**	Tuning Machine Assembly	GB100-D01 Left		Black	2	
	E03	**--**	Bushing	M9X15mm (Black)		with Tuning Machine Ass'y	5	
	E04	**--**	Spacer	M14.3X1.3mm (Black)		with Tuning Machine Ass'y	5	
	E05	**--**	Round Head Wood Screw	2.1X10 (Black)		with Tuning Machine Ass'y	5	
*	E11	**QC799000**	Nut	Bone 43mm				
*	E14	**QC806600**	Neck Joint Bushing	HB009 M15X3t		Black	6	
	E15	**VI825000**	Oval Head Tapping Screw	5.0X40 FCM3BL		Black	6	01
*	E17	**QC781600**	Bridge Assembly	SUNG-IL TRB-5 P=18		Black		
	E18	**03706590**	Oval Head Wood Screw	3.5X25 FCM3BL		Black	4	01
	E20	**--**	Strings	D'Addario EXL170-5		1set		
	E23	**QC656200**	Strap Button	AES-type (Black)			2	03
*	E24	**EN240080**	Oval Head Tapping Screw	4.0X30 FCM3BL		Black	2	
	E25	**VB793700**	Spacer	Felt (Black)			2	01
*	E27	**QC806800**	Control Knob (Large)	JAYU H-1 (Black)		M.VOLUME,PANPOT	2	
	E27a	**--**	Set Screw	M4.0X5 (Black)			2	
*	E28	**QC806900**	Control Knob (Small)	JAYU H-4 (Black)		BASS,MID,TREBLE	3	
	E28a	**--**	Set Screw	M3.0X3 (Black)			3	
	E29	**QC425800**	Back Cover	Electrical (Black)				08
	E31	**03744160**	Oval Head Tapping Screw	3.0X12 FCM3BL		Black	6	01
	F01	**QC558500**	Circuit Board	3-BAND EQ. Control				21
*	F06	**QC800100**	Box for Dry Cell	SJL CASE (Black)		with Connector		
	F07	**03706220**	Oval Head Wood Screw	2.1X10 FCM3BL		Black	2	01
	F08	**--**	Hexagonal Nut			with Volume	5	
	F09	**--**	Flat Washer			with Volume	5	
	F10	**--**	Toothed Lock Washer			with Volume	5	
*	F11	**QC800200**	Output Jack	CJ-ST/C (Black)		with Connector		
	F11a	**--**	Rubber Ring	M12X1.5mm				
	F11b	**--**	Hexagonal Nut	M11X2.4mm (Chrome)				
	G01	**QC428900**	Pickup Assembly	D/C		FRONT		22
	G01a	**--**	Pickup Cover	Black				
	G03	**VJ388800**	Pan Head Tapping Screw	2.6X35 FCM3BL		Black	3	02
	G04	**QC232300**	Pickup Cushion	Black			2	02
	G06	**QC429000**	Pickup Assembly	D/C		REAR		22
	G06a	**--**	Pickup Cover	Black				
	G08	**VJ388800**	Pan Head Tapping Screw	2.6X35 FCM3BL		Black	3	02
	G09	**QC232300**	Pickup Cushion	Black			2	02
	H01	**--**	Accessory Unit					
		QC583200	Cord	CABLE(2.5BK)				05
		TX900780	Wrench	#1.5				03
		AA815290	Wrench	#2				01
		AA821010	Wrench	#4				01
	H02	**--**	Battery	006P 9V Dry Cell				
*	H03	**QC778900**	Instruction Sheet					
*		**QC781600**	Bridge Assembly	SUNG-IL TRB-5 P=18		Black		
*	B01	**AAX53360**	Bridge Base	Black				
*	B02	**AAX53370**	Bridge Piece Assembly	30mm, 3.0X40, M3X12		1,2 Strings (Black)	2	
*	B03	**AAX53390**	Bridge Piece Assembly	25mm, 3.0X40, M3X12		3-5 Strings (Black)	3	

*: New Parts

RANK: Japan only

OVERALL ASSEMBLY

• TRB1006

E17 Bridge Assembly:
SUNG-IL TRB-6 Black (QC781500)

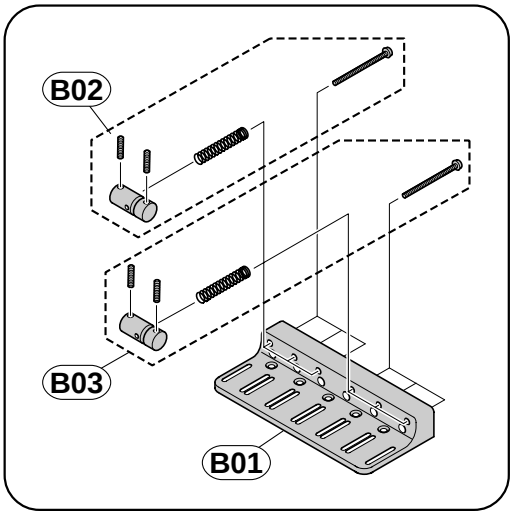

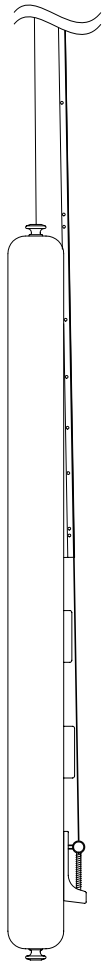

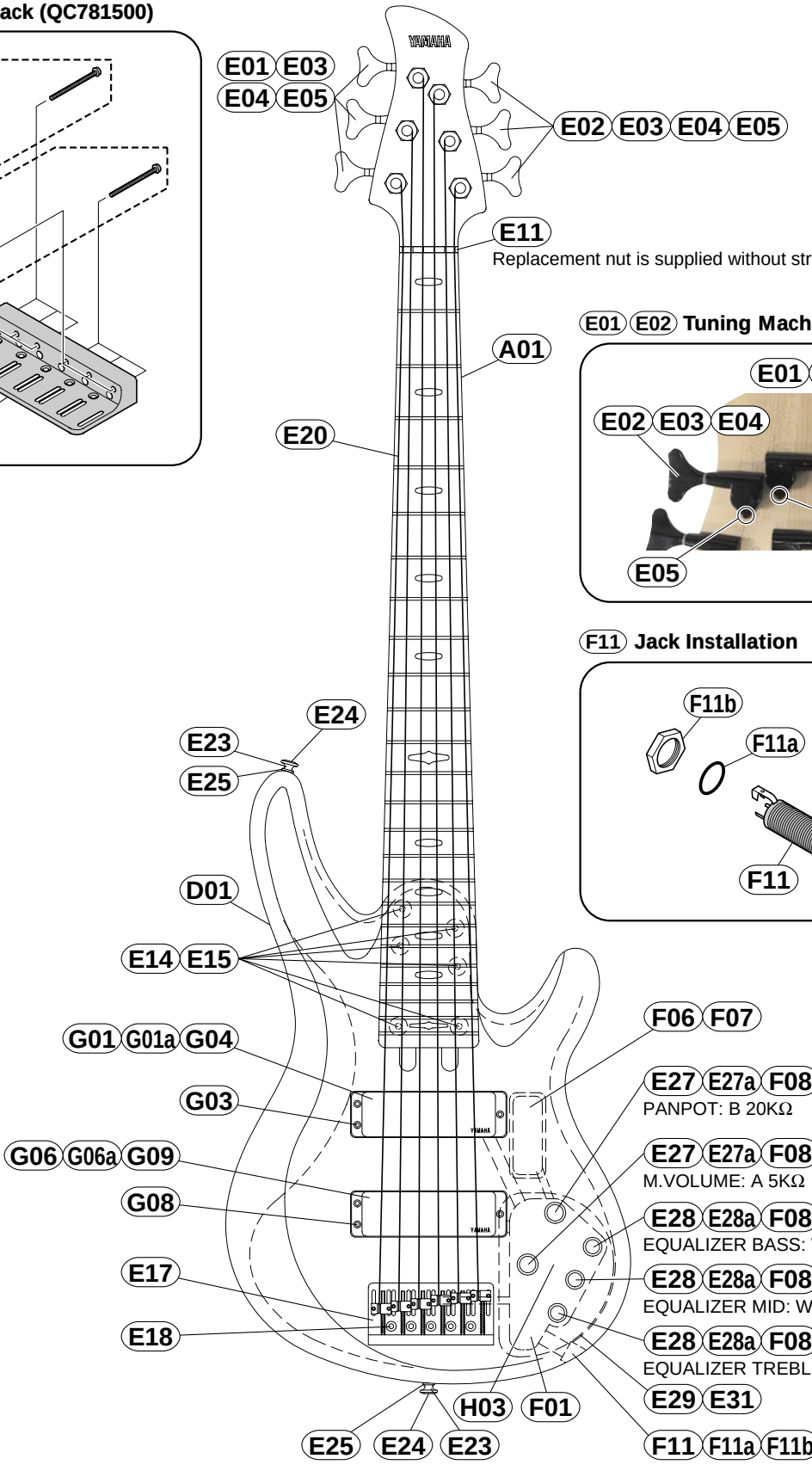

Replacement nut is supplied without string slot.

E01 E02 Tuning Machine Assembly

F11 Jack Installation

F06 F07

E27 E27a F08 F09 F10
PANPOT: B 20KΩ

E27 E27a F08 F09 F10
M.VOLUME: A 5KΩ

E28 E28a F08 F09 F10
EQUALIZER BASS: W 50KΩ

E28 E28a F08 F09 F10
EQUALIZER MID: W 50KΩ

E28 E28a F08 F09 F10
EQUALIZER TREBLE: W 50KΩ

E29 E31

F11 F11a F11b

• TRB1006

	REF NO.	PART NO.	DESCRIPTION			REMARKS	QTY	RANK
			OVERALL ASSEMBLY			TRB1006		
*	A01	**AAX57480**	Neck Assembly			TBL		
*	A01	**AAX57490**	Neck Assembly			TDR		
*	A01	**AAX53350**	Neck Assembly			NT		
	D01	**--**	Body					
*	E01	**QC798900**	Tuning Machine Assembly	GB100-D01 Right		Black	3	
*	E02	**QC798800**	Tuning Machine Assembly	GB100-D01 Left		Black	3	
	E03	**--**	Bushing	M9X15mm (Black)		with Tuning Machine Ass'y	6	
	E04	**--**	Spacer	M14.3X1.3mm (Black)		with Tuning Machine Ass'y	6	
	E05	**--**	Round Head Wood Screw	2.1X10 (Black)		with Tuning Machine Ass'y	6	
*	E11	**QC799200**	Nut	Bone 50mm				
*	E14	**QC806600**	Neck Joint Bushing	HB009 M15X3t		Black	6	
	E15	**VI825000**	Oval Head Tapping Screw	5.0X40 FCM3BL		Black	6	01
*	E17	**QC781500**	Bridge Assembly	SUNG-IL TRB-6 P=17		Black		
	E18	**03706590**	Oval Head Wood Screw	3.5X25 FCM3BL		Black	5	01
	E20	**--**	Strings	D'Addario EXL170-6		1set		
	E23	**QC656200**	Strap Button	AES-type (Black)			2	03
*	E24	**EN240080**	Oval Head Tapping Screw	4.0X30 FCM3BL		Black	2	
	E25	**VB793700**	Spacer	Felt (Black)			2	01
*	E27	**QC806800**	Control Knob (Large)	JAYU H-1 (Black)		M.VOLUME,PANPOT	2	
	E27a	**--**	Set Screw	M4.0X5 (Black)			2	
*	E28	**QC806900**	Control Knob (Small)	JAYU H-4 (Black)		BASS,MID,TREBLE	3	
	E28a	**--**	Set Screw	M3.0X3 (Black)			3	
	E29	**QC425800**	Back Cover	Electrical (Black)				08
	E31	**03744160**	Oval Head Tapping Screw	3.0X12 FCM3BL		Black	6	01
	F01	**QC558500**	Circuit Board	3-BAND EQ. Control				21
*	F06	**QC800100**	Box for Dry Cell	SJL CASE (Black)		with Connector		
	F07	**03706220**	Oval Head Wood Screw	2.1X10 FCM3BL		Black	2	01
	F08	**--**	Hexagonal Nut			with Volume	5	
	F09	**--**	Flat Washer			with Volume	5	
	F10	**--**	Toothed Lock Washer			with Volume	5	
*	F11	**QC800200**	Output Jack	CJ-ST/C (Black)		with Connector		
	F11a	**--**	Rubber Ring	M12X1.5mm				
	F11b	**--**	Hexagonal Nut	M11X2.4mm (Chrome)				
	G01	**QC474100**	Pickup Assembly	D/C		FRONT		19
	G01a	**--**	Pickup Cover	Black				
	G03	**VJ388800**	Pan Head Tapping Screw	2.6X35 FCM3BL		Black	3	02
	G04	**QC232300**	Pickup Cushion	Black			2	02
	G06	**QC474200**	Pickup Assembly	D/C		REAR		19
	G06a	**--**	Pickup Cover	Black				
	G08	**VJ388800**	Pan Head Tapping Screw	2.6X35 FCM3BL		Black	3	02
	G09	**QC232300**	Pickup Cushion	Black			2	02
	H01	**--**	Accessory Unit					
		QC583200	Cord	CABLE(2.5BK)				05
		TX900780	Wrench	#1.5				03
		AA815290	Wrench	#2				01
		AA821010	Wrench	#4				01
	H02	**--**	Battery	006P 9V Dry Cell				
*	H03	**QC778900**	Instruction Sheet					
*		**QC781500**	Bridge Assembly	SUNG-IL TRB-6 P=17		Black		
*	B01	**AAX53380**	Bridge Base	Black				
*	B02	**AAX53910**	Bridge Piece Assembly	30mm, 3.0X40, M3X12		1-3 Strings (Black)	3	
*	B03	**AAX53920**	Bridge Piece Assembly	25mm, 3.0X40, M3X12		4-6 Strings (Black)	3	

*: New Parts

RANK: Japan only

ELECTRICAL PARTS

REF NO.	PART NO.	DESCRIPTION			REMARKS	QTY	RANK
		ELECTRICAL PARTS			TRB1005/TRB1005F/TRB1006		
	QC558500	Circuit Board	3-BAND EQ. Control		(QC55840)		21
	QC558500	Circuit Board	3-BAND EQ. Control		(QC55840)		21
	QC434900	Hexagonal Nut				5	06
C01	**FP355100**	Tantalum Capacitor	0.1uF/16V				02
-04	**FP355100**	Tantalum Capacitor	0.1uF/16V				02
C05	**FX804200**	Electrolytic Cap.	22u/16V R3A-16V220				05
C06	**FX804200**	Electrolytic Cap.	22u/16V R3A-16V220				05
C31	**UI137100**	Electrolytic Cap.	10u/16V RC3-16V100				01
C32	**FG444100**	Ceramic Capacitor	0.01uF				01
C33	**FX804200**	Electrolytic Cap.	22u/16V R3A-16V220				05
C34	**UI137100**	Electrolytic Cap.	10u/16V RC3-16V100				01
C35	**FG444100**	Ceramic Capacitor	0.01uF				01
C36	**UI137100**	Electrolytic Cap.	10u/16V RC3-16V100				01
C37	**FG444100**	Ceramic Capacitor	0.01uF				01
C38	**UI137100**	Electrolytic Cap.	10u/16V RC3-16V100				01
C39	**UI166100**	Electrolytic Cap.	1u/50V RC3-50V010M				01
C40	**UI166100**	Electrolytic Cap.	1u/50V RC3-50V010M				01
C41	**FG444100**	Ceramic Capacitor	0.01uF				01
C42	**FG444100**	Ceramic Capacitor	0.01uF				01
C51	**FG212100**	Ceramic Capacitor	100pF/50V				01
C52	**FG212100**	Ceramic Capacitor	100pF/50V				01
C53	**FX804200**	Electrolytic Cap.	22u/16V R3A-16V220				05
C61	**UA154180**	Mylar Capacitor	0.018uF				01
C62	**UA153680**	Mylar Capacitor	6800pF				01
C63	**UI166100**	Electrolytic Cap.	1u/50V RC3-50V010M				01
C71	**FG211470**	Ceramic Capacitor	47pF/50V				01
C72	**UA154270**	Mylar Capacitor	0.027uF				01
C73	**UA154330**	Mylar Capacitor	0.033uF				03
C81	**UA153220**	Mylar Capacitor	2200pF				01
C82	**UA153150**	Mylar Capacitor	1500pF				01
C83	**FG212100**	Ceramic Capacitor	100pF/50V				01
C84	**FG212330**	Ceramic Capacitor	330pF/50V				01
C85	**FG212330**	Ceramic Capacitor	330pF/50V				01
CN1	**LB918020**	Connector	B2B-XH-A 2P		to FRONT PICKUP		01
CN2	**LB918020**	Connector	B2B-XH-A 2P		to REAR PICKUP		01
CN3	**LB918040**	Connector	B4B-XH-A 4P		to OUTPUT JACK		01
CN4	**LB918020**	Connector	B2B-XH-A 2P		to BATTERY		01
D01	**IX808800**	Diode	E-301				05
-04	**IX808800**	Diode	E-301				05
D05	**QC183900**	Diode	1SR139-100				01
IC1	**IX808770**	IC	OP200GP		OP AMP		12
IC2	**IG070700**	IC	TL062CP		OP AMP		07
IC3	**IG070700**	IC	TL062CP		OP AMP		07
IC4	**IX808780**	IC	TC7662BEPA		⎫ REGULATOR		10
IC4	**IX808780**	IC	ICL7660SIPA		⎭		10
L01	**GX804490**	Coil	ELEXG101KA 100uH				04
-04	**GX804490**	Coil	ELEXG101KA 100uH				04
Q01	**IX808790**	FET	2SK30ATM(O)				04
-04	**IX808790**	FET	2SK30ATM(O)				04
R01	**HF559100**	Carbon Resistor	1.0M 1/6W J				01
-04	**HF559100**	Carbon Resistor	1.0M 1/6W J				01
R05	**HF559220**	Carbon Resistor	2.2M 1/6W J				03
-08	**HF559220**	Carbon Resistor	2.2M 1/6W J				03
R09	**HF556680**	Carbon Resistor	6.8K 1/6W J				01
-12	**HF556680**	Carbon Resistor	6.8K 1/6W J				01
R13	**HF557100**	Carbon Resistor	10K 1/6W J				01
R14	**HF557100**	Carbon Resistor	10K 1/6W J				01
R15	**HF556470**	Carbon Resistor	4.7K 1/6W J				01
R16	**HF556470**	Carbon Resistor	4.7K 1/6W J				01
R21	**HF558470**	Carbon Resistor	470K 1/6W J				03
R23	**HF557270**	Carbon Resistor	27K 1/6W J				01
R31	**HF557330**	Carbon Resistor	33K 1/6W J				01
R32	**HF557270**	Carbon Resistor	27K 1/6W J				01
R51	**HF557470**	Carbon Resistor	47K 1/6W J				01
R52	**HF557470**	Carbon Resistor	47K 1/6W J				01
R53	**HF557330**	Carbon Resistor	33K 1/6W J				01
R54	**HF554330**	Carbon Resistor	33 1/6W J				03
R55	**HF557180**	Carbon Resistor	18K 1/6W J				01

✻: New Parts

RANK: Japan only

REF NO.	PART NO.	DESCRIPTION			REMARKS	QTY	RANK
R56	**HF557220**	Carbon Resistor	22K 1/6W J				01
R57	**HF554330**	Carbon Resistor	33 1/6W J				03
R61	**HF557330**	Carbon Resistor	33K 1/6W J				01
R62	**HF557330**	Carbon Resistor	33K 1/6W J				01
R63	**HF557120**	Carbon Resistor	12K 1/6W J				01
R64	**HF557680**	Carbon Resistor	68K 1/6W J				01
R65	**HF557470**	Carbon Resistor	47K 1/6W J				01
R71	**HF554330**	Carbon Resistor	33 1/6W J				03
R72	**HF557220**	Carbon Resistor	22K 1/6W J				01
-75	**HF557220**	Carbon Resistor	22K 1/6W J				01
R76	**HF556100**	Carbon Resistor	1.0K 1/6W J				01
R81	**HF557330**	Carbon Resistor	33K 1/6W J				01
R82	**HF557470**	Carbon Resistor	47K 1/6W J				01
R83	**HF557100**	Carbon Resistor	10K 1/6W J				01
R84	**HF557100**	Carbon Resistor	10K 1/6W J				01
R85	**HF557220**	Carbon Resistor	22K 1/6W J				01
R86	**HF557100**	Carbon Resistor	10K 1/6W J				01
R87	**HF556330**	Carbon Resistor	3.3K 1/6W J				01
R88	**HF557470**	Carbon Resistor	47K 1/6W J				01
R89	**HF557470**	Carbon Resistor	47K 1/6W J				01
VR1	**AAX14660**	Rotary Variable Resistor	RK14K1240B24 20KB		PANPOT		04
VR2	**AAX14670**	Rotary Variable Resistor	RK14K1240A53 5KA		M.VOLUME		04
VR3	**AAX14680**	Rotary Variable Resistor	RK14K1240W54 50KW		EQUALIZER BASS/MID/TREBLE		04
-5	**AAX14680**	Rotary Variable Resistor	RK14K1240W54 50KW				04
VR7	**HX809170**	Trimmer Potentiometer	EVND8AAO BQ3 4.7K		Noise cancel		04
VR8	**HX809170**	Trimmer Potentiometer	EVND8AAO BQ3 4.7K		Noise cancel		04

※: New Parts

RANK: Japan only

CIRCUIT BOARD

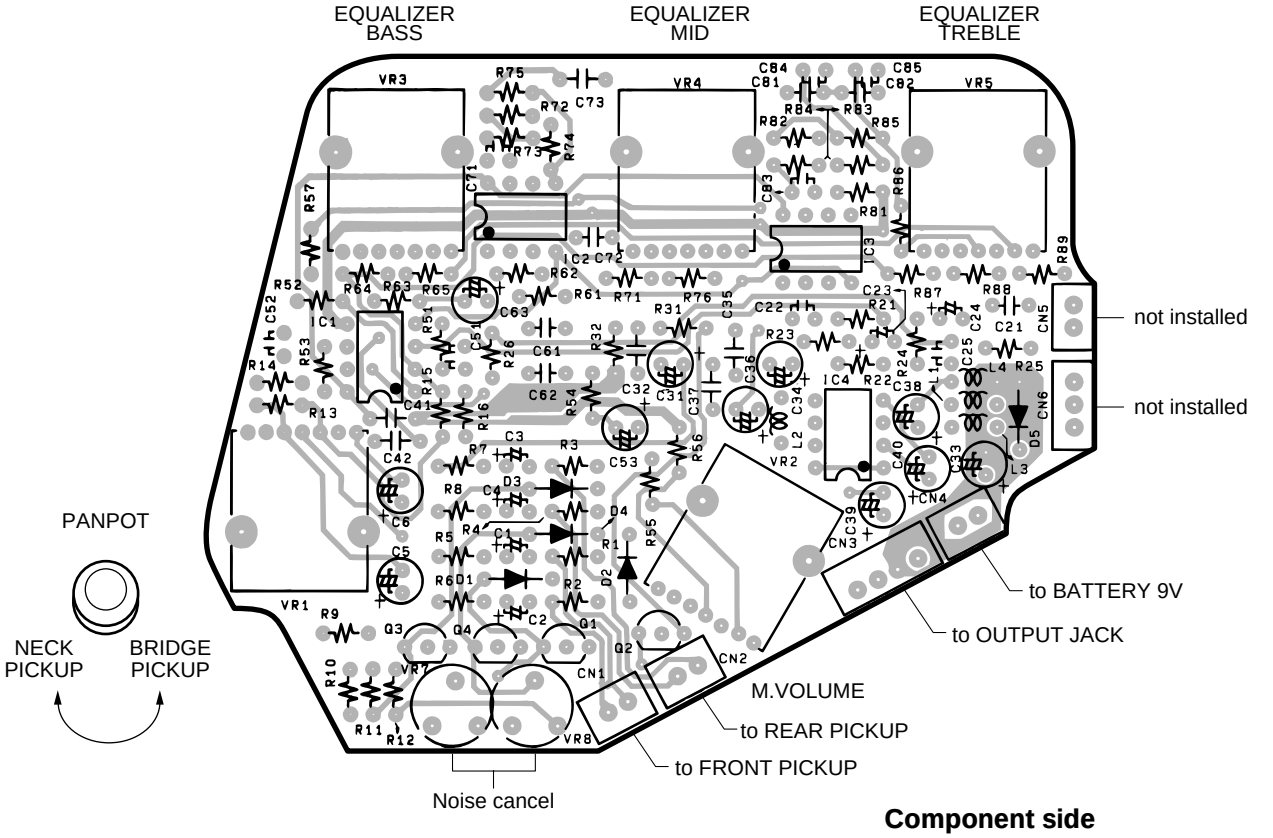

Component side

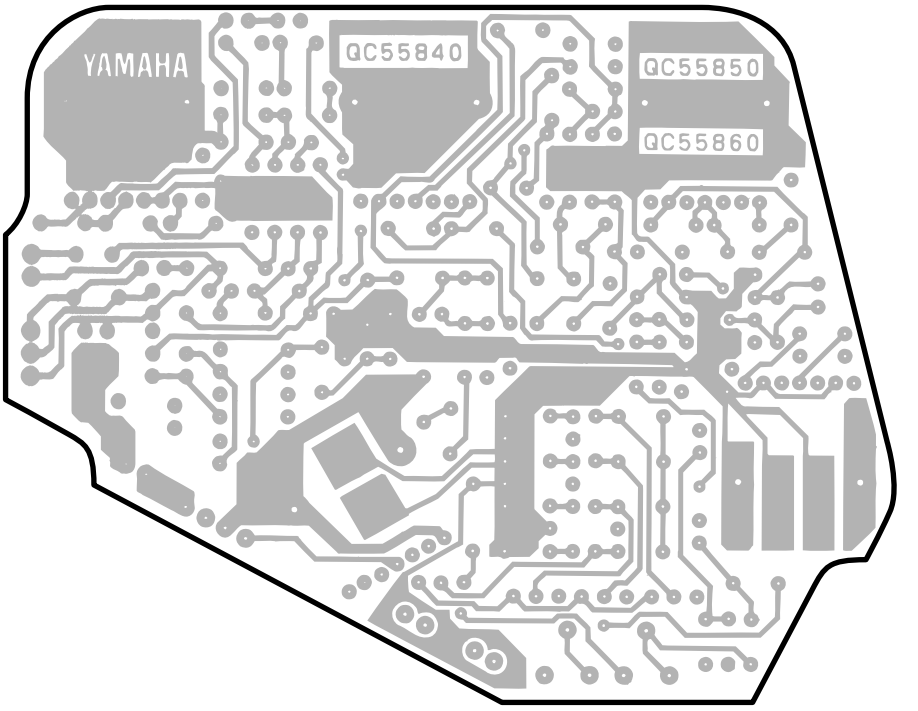

Note: See parts list for details of circuit board component parts.

Pattern side

EPB-QC55840

CIRCUIT DIAGRAM

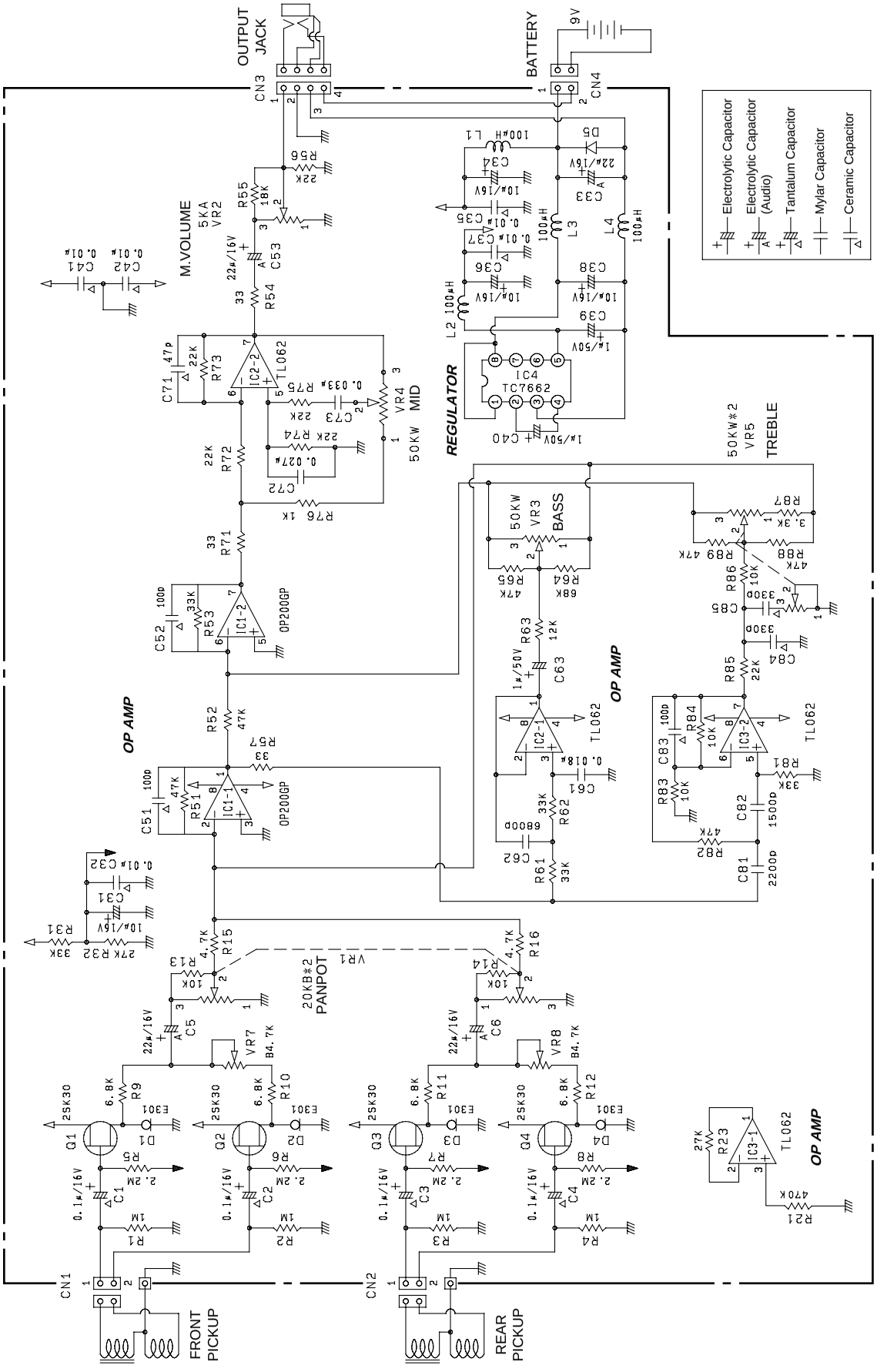

WIRING

• TRB1005/TRB1005F

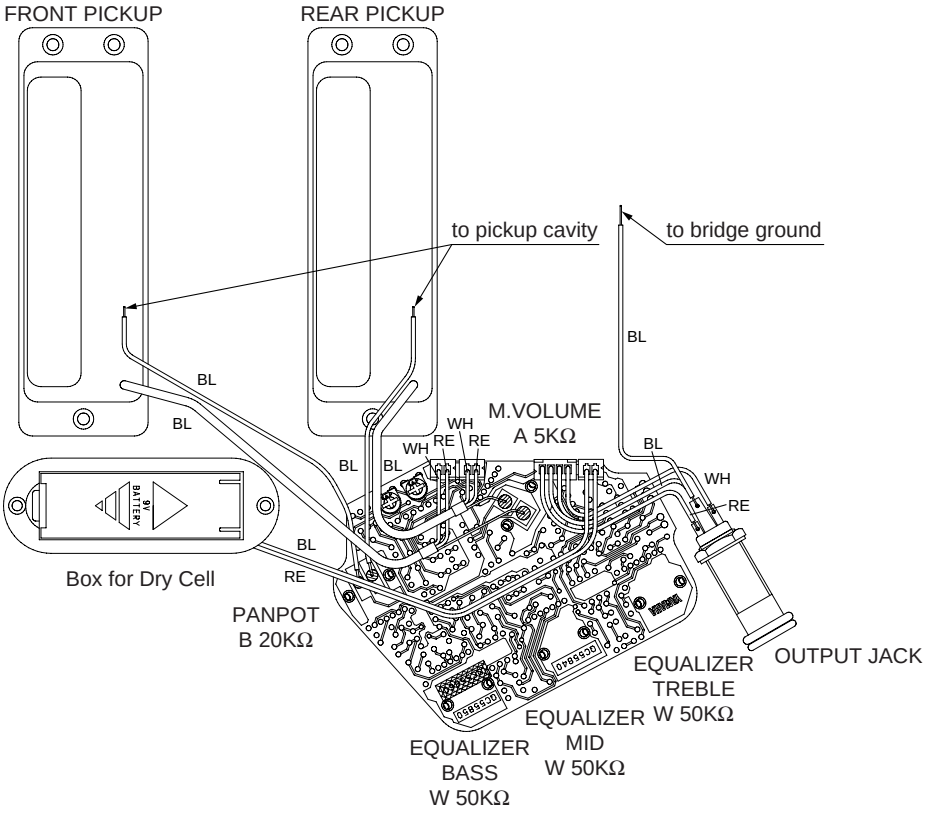

• TRB1006

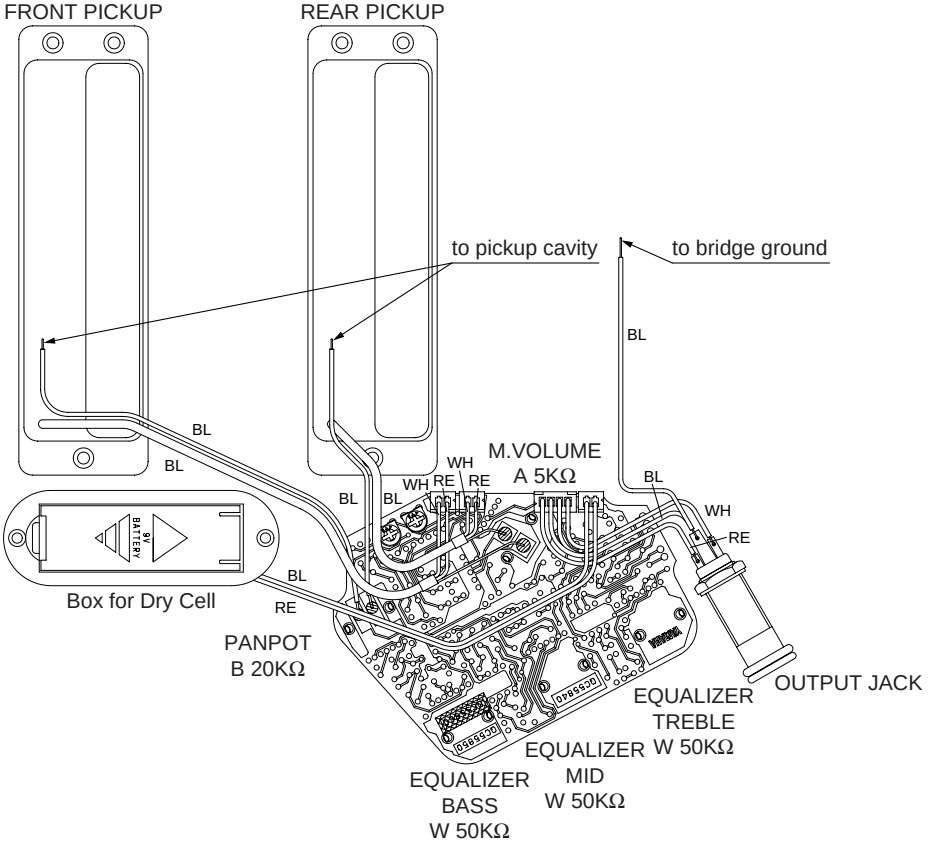

SPECIFICATIONS

● **STANDARD SPECIFICATIONS**
Scale Length 889.0mm
Body-Neck Construction ..... Bolt On
Length
TRB1005/TRB1005F 1153.7mm
TRB1006 ..... 1173.3mm
Width
TRB1005/TRB1005F 334.5mm
TRB1006 ..... 346.0mm
Net Weight
TRB1005/TRB1005F 4.3kg
TRB1006 ..... 4.8kg

● **COLOR**
Body
TRB1005/TRB1006
TBL ..... Translucent Black
TDR ..... Translucent Dark Red
NT ..... Natural
TRB1005F
TBL ..... Translucent Black
NT ..... Natural
Neck
TRB1005/TRB1006
TBL ..... Translucent Black
TDR ..... Translucent Dark Red
NT ..... Natural
TRB1005F
TBL ..... Translucent Black
NT ..... Natural

● **BODY**
Material ..... Maple, Alder
Body Depth 41mm

● **FINGERBOARD**
Material ..... Rosewood
Fingerboard Width
TRB1005/TRB1005F 0-F 43.0mm, 12-F 65.9mm
TRB1006 ..... 0-F 50.0mm, 12-F 73.6mm
No. of Frets
TRB1005/TRB1006 24

● **NECK**
Material ..... Maple
Neck Thickness 1-F 20.0mm, 12-F 24.0mm

● **PARTS**
Hardware ..... Black Plated
Nut ..... Bone
Bridge
TRB1005/TRB1005F ..... SUNG-IL: TRB-5 (Black)
TRB1006 ..... SUNG-IL: TRB-6 (Black)
Strings
TRB1005/TRB1005F ..... D'Addario: EXL170-5
TRB1006 ..... D'Addario: EXL170-6

● **CONTROLS**
M.Volume ..... A 5KΩ x 1
Panpot ..... B 20KΩ x 1
Equalizer ..... W 50KΩ x 3 (BASS, MID, TREBLE)

● **PICKUPS**
Front/Rear ..... Double Coil
Magnet
Front/Rear ..... Alnico V

WARNING: CHEMICAL CONTENT NOTICE!

The solder used in the production of this product contains LEAD. In addition, other electrical/electronic and/or plastic (Where applicable) components may also contain traces of chemicals found by the California Health and Welfare Agency (and possibly other entities) to cause cancer and/or birth defects or other reproductive harm.

DO NOT PLACE SOLDER, ELECTRICAL/ELECTRONIC OR PLASTIC COMPONENTS IN YOUR MOUTH FOR ANY REASON WHAT SO EVER!

Avoid prolonged, unprotected contact between solder and your skin! When soldering, do not inhale solder fumes or expose eyes to solder/flux vapor!

If you come in contact with solder or components located inside the enclosure of this product, wash your hands before handling food.