DIGITAL KEYBOARD

PSR-F51

SERVICE MANUAL



This service manual contains only the parts lists for the PSR-F51. When conducting repairs, refer also to the PSR-F50 service manuals (PK **001894**).

CONTENTS

PARTS LIST

PK 001937

YAMAHA

HAMAMATSU, JAPAN

Copyright (c) Yamaha Corporation. All rights reserved. PDF '16.07

IMPORTANT NOTICE

This manual has been provided for the use of authorized Yamaha Retailers and their service personnel. It has been assumed that basic service procedures inherent to the industry, and more specifically Yamaha Products, are already known and understood by the users, and have therefore not been restated.

WARNING : Failure to follow appropriate service and safety procedures when servicing this product may result in personal injury, destruction of expensive components and failure of the product to perform as specified. For these reasons, we advise all Yamaha product owners that all service required should be performed by an authorized Yamaha Retailer or the appointed service representative.

IMPORTANT : This presentation or sale of this manual to any individual or firm does not constitute authorization certification, recognition of any applicable technical capabilities, or establish a principal-agent relationship of any form.

The data provided is believed to be accurate and applicable to the unit(s) indicated on the cover. The research engineering, and service departments of Yamaha are continually striving to improve Yamaha products. Modifications are, therefore, inevitable and changes in specification are subject to change without notice or obligation to retrofit. Should any discrepancy appear to exist, please contact the distributor's Service Division.

WARNING : Static discharges can destroy expensive components. Discharge any static electricity your body may have accumulated by grounding yourself to the ground bus in the unit (heavy gauge black wires connect to this bus.)

IMPORTANT : Turn the unit OFF during disassembly and parts replacement. Recheck all work before you apply power to the unit.

WARNING: This product contains chemicals known to the State of California to cause cancer, or birth defects or other reproductive harm.

DO NOT PLACE SOLDER, ELECTRICAL/ELECTRONIC OR PLASTIC COMPONENTS IN YOUR MOUTH FOR ANY REASON WHAT SO EVER!

Avoid prolonged, unprotected contact between solder and your skin! When soldering, do not inhale solder fumes or expose eyes to solder/flux vapor!

If you come in contact with solder or components located inside the enclosure of this product, wash your hands before handling food.

WARNING

Components having special characteristics are marked ⚠ and must be replaced with parts having specification equal to those originally installed.

SAVING DATA



Be sure to perform it

Saving and backing up your data

Some data items are automatically saved as backup data in the internal memory even if you turn the power off. Saved data may be lost due to malfunction or incorrect operation. Save important data to external device such as a computer.

DIGITAL KEYBOARD

PSR-F51

PARTS LIST

■ CONTENTS

OVERALL ASSEMBLY 2

KEYBOARD ASSEMBLY 4

ELECTRICAL PARTS 5

Notes : DESTINATION ABBREVIATIONS

A : Australian model	O : Chinese model
B : British model	P : Brazilian model
C : Canadian model	Q : South-east Asia model
D : German model	T : Taiwan model
E : European model	U : U.S.A. model
F : French model	V : General export model (110V)
H : North European model	W: General export model (220V)
I : Indonesian model	N,X: General export model
J : Japanese model	Y : Export model
K : Korean model	Z : Indian model
M : South African model	

■ WARNING

Components having special characteristics are marked ⚠ and must be replaced with parts having specification equal to those originally installed.

- The numbers “QTY” show quantities for each unit.
- The parts with “--” in “PART NO.” are not available as spare parts.
- This mark “ } ” in the REMARKS column means these parts are interchangeable.
- The second letter of the shaded ( ) part number is O, not zero.
- The second letter of the shaded ( ) part number is I, not one.

OVERALL ASSEMBLY

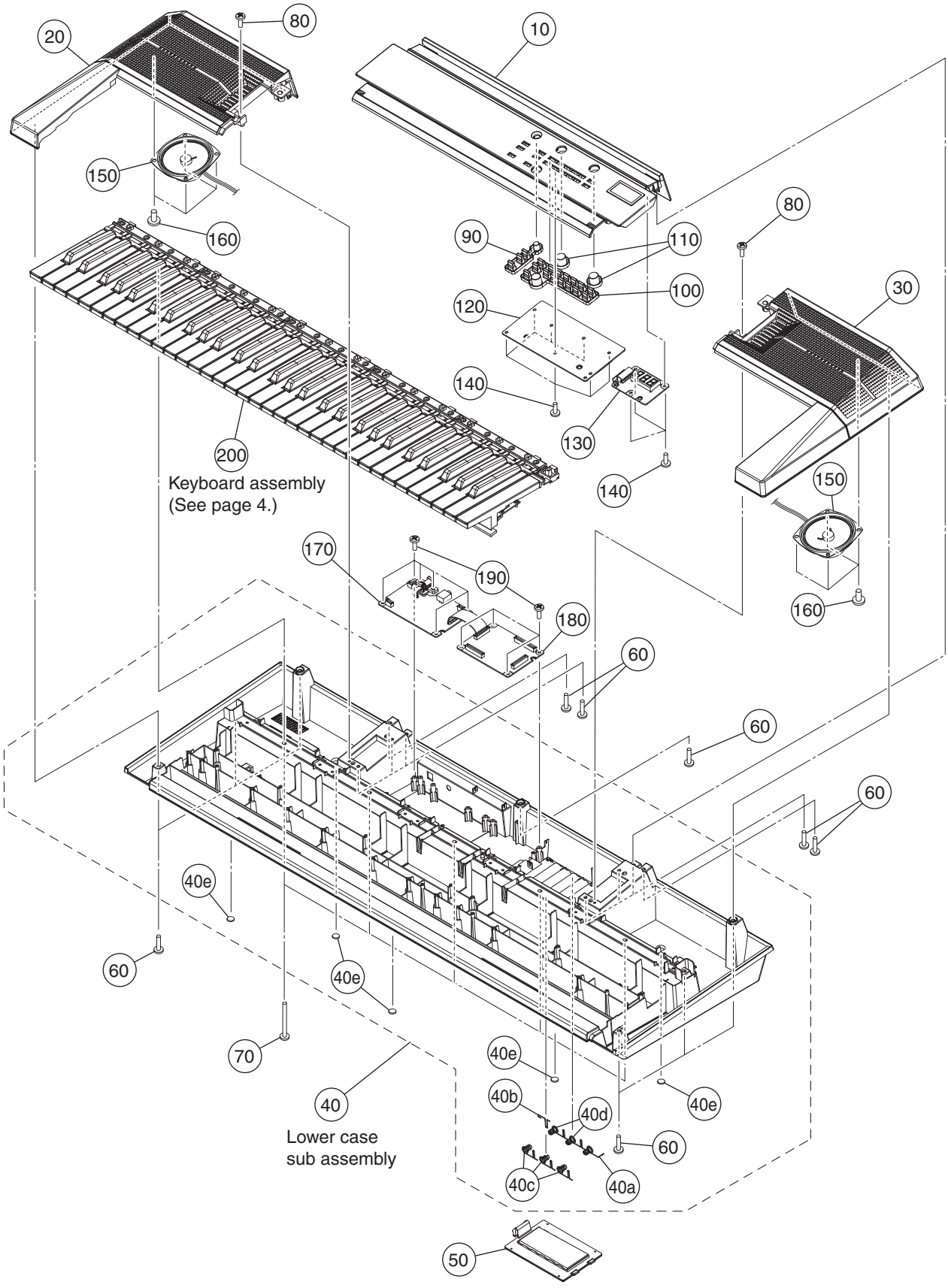

	REF NO.	PART NO.	DESCRIPTION		部品名	REMARKS	QTY
			OVERALL ASSEMBLY		総組立	PSR-F51	
*	10	**ZW040200**	C PANEL SUB ASSEMBLY	E	C パネル Ass'y	E (EP50XXZV7MM)	
*	10	**ZW040300**	C PANEL SUB ASSEMBLY	CHN	C パネル Ass'y	O (EP50XXZV8MV)	
*	20	**ZW040400**	L PANEL SUB ASSEMBLY		左パネル Ass'y	(EP50XXZV9MS)	
*	30	**ZW040500**	R PANEL SUB ASSEMBLY		右パネル Ass'y	(EP50XXZVAMM)	
*	40	**ZW040600**	LOWER CASE SUB ASSEMBLY		下ケース Ass'y	(EP50XXZVBMS)	
	40a	**WD87920R**	SPRING TERMINAL A	-	接点バネ A		
	40b	**WD87930R**	SPRING TERMINAL B	+	接点バネ B		
	40c	**WD87940R**	SPRING TERMINAL C	+/-	接点バネ C		3
	40d	**WD87970R**	SPRING TERMINAL D	+/-	接点バネ D		2
	40e	**WW693500**	RUBBER FOOT		ゴム脚		5
*	50	**ZW040700**	BATTERY LID ASSEMBLY		電池蓋 Ass'y	(EP50XXZVCMV)	
	60	**WE98740R**	BIND HEAD TAPPING SCREW	3.0X12 MFZN2W3	Bタイト+BIND		15
	70	**WF491001**	SCREW TP #B +BIND	3.0X30 MFZN2W3	Bタイト+BIND		5
	80	**WE774301**	BIND HEAD B-TIGHT SCREW	3.0X8 MFZN2W3	Bタイト+BIND		2
*	90	**ZW042300**	PN RUBBER CONTACT	MAIN PSR-F51	PN スイッチ	STANDBY/ON, MASTER VOLUME+/-, FUNCTION (EP50XXZVDMM)	
*	100	**ZW042400**	PN RUBBER CONTACT	SET PSR-F51	PN スイッチ	TEMPO/TAP, MUTE PAUSE/AUTO FILL, START/STOP, 0-9,+,- SONG/STYLE, VOICE (EP50XXZVEMQ)	
*	110	**ZW042500**	PN RUBBER CONTACT	MODE PSR-F51	PN スイッチ	(EP50XXZVFMT)	2
*	120	**ZW041300**	CIRCUIT BOARD	PN	PN シート	(EP50XXZV1MU)	
*	130	**ZW041400**	CIRCUIT BOARD	7SEG	7SEG シート	(EP50XXZV2MR)	
	140	**WE774301**	BIND HEAD B-TIGHT SCREW	3.0X8 MFZN2W3	Bタイト+BIND		10
*	150	**YF173A01**	LOUD SPEAKER	8.0CM 4OHM 3W	スピーカ	(YF173A0)	2
	160	**WE97460R**	BIND HEAD TAPPING SCREW-B	4.0X8 MFZN2W3	Bタイト+BIND		8
*	170	**ZW041100**	CIRCUIT BOARD	AM	AM シート	(EP50XXZV0MM)	
*	180	**ZW041600**	CIRCUIT BOARD	DM	DM シート	(EP50XXZV3MN)	
	190	**WE774301**	BIND HEAD B-TIGHT SCREW	3.0X8 MFZN2W3	Bタイト+BIND		10
	200	**--**	KEYBOARD ASSEMBLY	16NS-C61 1M	16NS 鍵盤		
			Accessories		付属品		
*		**ZW042600**	MUSIC REST PK BLACK	PSR-F51	譜面板	(EP50XXZV6MQ)	
⚠		**ZP655800**	AC ADAPTOR SET	PA-130B E	アダプターセット	E	
⚠		**ZP655900**	AC ADAPTOR SET	PA-130B B	アダプターセット	B	
⚠		**ZP656200**	AC ADAPTOR SET	PA-130B CHN	アダプターセット	O	
⚠		**ZP656100**	AC ADAPTOR SET	PA-130B BRA	アダプターセット	P	
⚠ *		**ZU900600**	AC ADAPTOR SET	PA-130B IN	アダプターセット	Z	
⚠		**ZP656000**	AC ADAPTOR SET	PA-130B K	アダプターセット	K	
⚠		**ZP656400**	AC ADAPTOR SET	PA-130B A	アダプターセット	A	

*: New Parts

KEYBOARD ASSEMBLY

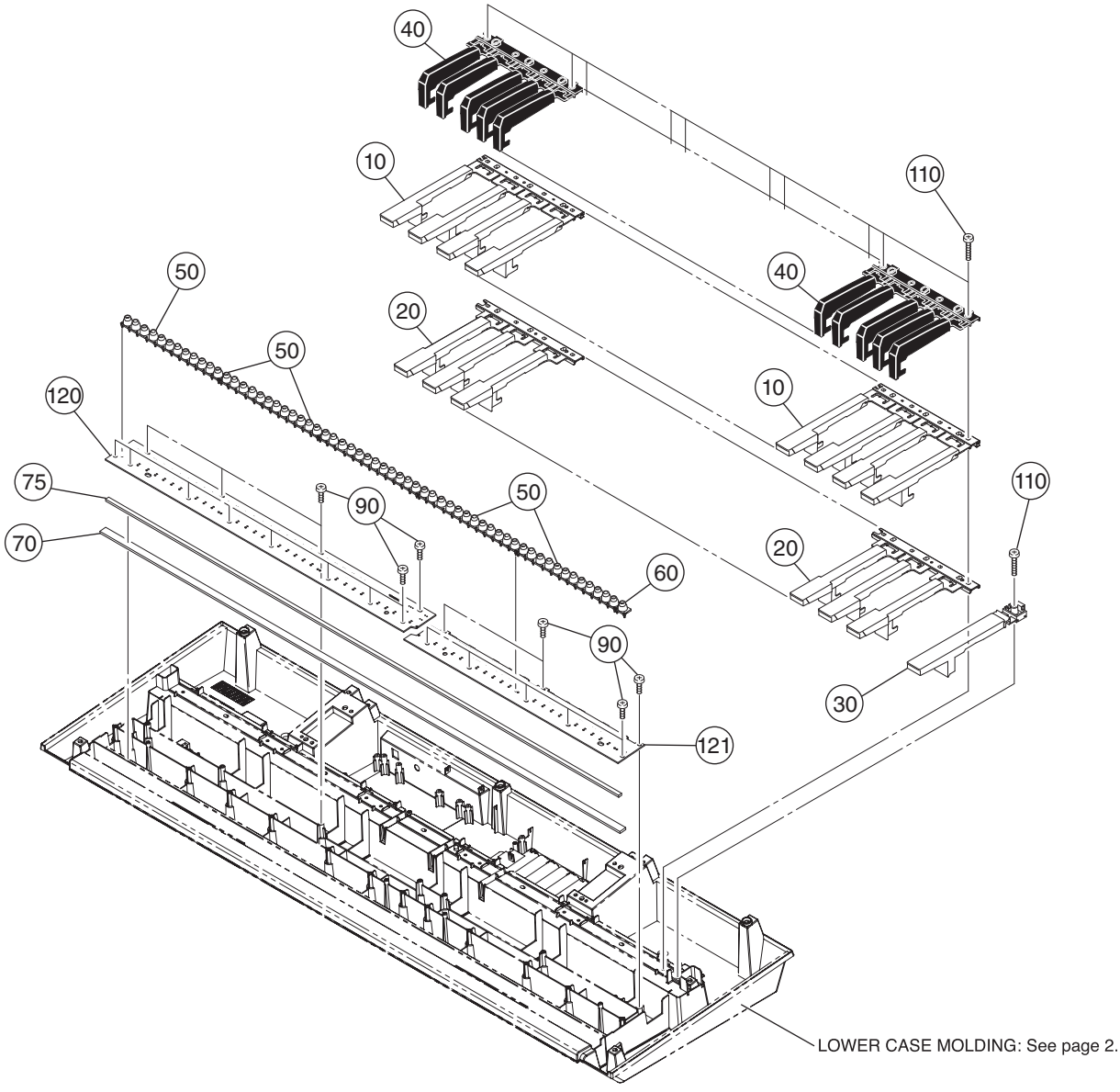

	REF NO.	PART NO.	DESCRIPTION		部品名	REMARKS	QTY
		--	KEYBOARD ASSEMBLY	16NS-C61 1M	１６ＮＳ－Ｃ６１鍵盤		
*	10	**ZE3698I0**	WHITE KEY	16NS CEGB	白鍵ＣＥＧＢ		5
*	20	**ZE3699I0**	WHITE KEY	16NS DFA	白鍵ＤＦＡ		5
*	30	**V4760310**	WHITE KEY	16N C'	白鍵Ｃ’		
*	40	**WZ168310**	BLACK KEY	16NS # T=1.5	黒鍵		5
*	50	**WE152501**	RUBBER CONTACT	16N-1M OCT	接点ゴム		5
	60	**ZQ194600**	RUBBER CONTACT	16N-1M C'	接点ゴム		
*	70	**VZ303002**	FELT L	827X11 SHIRO	フェルトＬ		
*	75	**VZ302902**	FELT U	836X5 SHIRO	フェルトＵ		
	90	**WE774301**	BIND HEAD B-TIGHT SCREW	3.0X8 MFZN2W3	Ｂタイト＋ＢＩＮＤ		20
	110	**WF49200R**	BIND HEAD TAPPING SCREW-P	3.0X20 MFZN2W3	Ｐタイト＋ＢＩＮＤ		11
*	120	**ZW041800**	CIRCUIT BOARD	MKL	ＭＫＬシート	(EP50XXZV5MT)	
*	121	**ZW041700**	CIRCUIT BOARD	MKH	ＭＫＨシート	(EP50XXZV4ML)	

*: New Parts

■ ELECTRICAL PARTS

DM and AM/PN/7SEG and MKL/MKH

	REF NO.	PART NO.	DESCRIPTION		部品名	REMARKS	QTY
			ELECTRICAL PARTS		電気部品	PSR-F51	
*		**ZW041600**	CIRCUIT BOARD	DM	DMシート	(EP50XXZV3MN)	
*		**ZW041100**	CIRCUIT BOARD	AM	AMシート	(EP50XXZV0MM)	
*		**ZW041300**	CIRCUIT BOARD	PN	PNシート	(EP50XXZV1MU)	
*		**ZW041400**	CIRCUIT BOARD	7SEG	7SEGシート	(EP50XXZV2MR)	
*		**ZW041800**	CIRCUIT BOARD	MKL	MKLシート	(EP50XXZV5MT)	
*		**ZW041700**	CIRCUIT BOARD	MKH	MKHシート	(EP50XXZV4ML)	
*		**ZW041600**	CIRCUIT BOARD	DM	DMシート	(EP50XXZV3MN)	
	IC1	**YE787A00**	IC	IC BU33TD3WG-TR 3.3V	IC	REGULATOR +3.3V	
	IC2	**X8260A01**	IC	IC BA50BCOFP-E2 +5V	IC	REGULATOR +5V	
	IC3	**YE787A00**	IC	IC BU33TD3WG-TR 3.3V	IC	REGULATOR +3.3V	
*		**ZW041100**	CIRCUIT BOARD	AM	AMシート	(EP50XXZV0MM)	
*		**ZW041300**	CIRCUIT BOARD	PN	PNシート	(EP50XXZV1MU)	
*		**ZW041400**	CIRCUIT BOARD	7SEG	7SEGシート	(EP50XXZV2MR)	
	IC151	**YF011A01**	IC ANALOG AMP	TA8227AP 2.5W 2CH	アンプIC	POWER AMP 2.5W 2CH	
⚠	JK101	**WZ704401**	POWER JACK	DC-502-AG-PBT-2.0-	電源コネクタ	DC-IN	
	JK151	**ZA590000**	PHONE JACK	MINI STEREO	ホーンコネクタ	PHONES/OUTPUT	
*		**ZW041800**	CIRCUIT BOARD	MKL	MKLシート	(EP50XXZV5MT)	
*		**ZW041700**	CIRCUIT BOARD	MKH	MKHシート	(EP50XXZV4ML)	
	D1	**VB941201**	DIODE	1SS133,1SS176 TE-5	ダイオード		
	-D61	**VB941201**	DIODE	1SS133,1SS176 TE-5	ダイオード		
*		**YF173A01**	LOUD SPEAKER	8.0CM 4OHM 3W	スピーカ	(YF173A0)	2
⚠		**ZP655800**	AC ADAPTOR SET	PA-130B E	アダプターセット	E	
⚠		**ZP655900**	AC ADAPTOR SET	PA-130B B	アダプターセット	B	
⚠		**ZP656200**	AC ADAPTOR SET	PA-130B CHN	アダプターセット	O	
⚠		**ZP656100**	AC ADAPTOR SET	PA-130B BRA	アダプターセット	P	
⚠	*	**ZU900600**	AC ADAPTOR SET	PA-130B IN	アダプターセット	Z	
⚠		**ZP656000**	AC ADAPTOR SET	PA-130B K	アダプターセット	K	
⚠		**ZP656400**	AC ADAPTOR SET	PA-130B A	アダプターセット	A	

*: New Parts