PSR-E373/YPT-370

SERVICE MANUAL



PSR-E373



YPT-370

■ CONTENTS

SPECIFICATIONS..... 3
PANEL LAYOUT..... 5
CIRCUIT BOARD LAYOUT & WIRING..... 7
BLOCK DIAGRAM..... 8
DISASSEMBLY PROCEDURE..... 9
CIRCUIT BOARDS..... 16
DMLCD Circuit Board Check Method..... 22
TEST PROGRAM..... 23
BACKUP..... 30
INITIALIZATION..... 31
SYSTEM BOOTING FLOW CHART..... 32
PARTS LIST
OVERALL CIRCUIT DIAGRAM

PK 001996 -A0

2020.09

© 2020 Yamaha Corporation.

YAMAHA

IMPORTANT NOTICE

This manual has been provided for the use of authorized Yamaha Retailers and their service personnel. It has been assumed that basic service procedures inherent to the industry, and more specifically Yamaha Products, are already known and understood by the users, and have therefore not been restated.

WARNING : Failure to follow appropriate service and safety procedures when servicing this product may result in personal injury, destruction of expensive components and failure of the product to perform as specified. For these reasons, we advise all Yamaha product owners that all service required should be performed by an authorized Yamaha Retailer or the appointed service representative.

IMPORTANT : This presentation or sale of this manual to any individual or firm does not constitute authorization certification, recognition of any applicable technical capabilities, or establish a principal-agent relationship of any form.

The data provided is believed to be accurate and applicable to the unit(s) indicated on the cover. The research engineering, and service departments of Yamaha are continually striving to improve Yamaha products. Modifications are, therefore, inevitable and changesin specification are subject to change without notice or obligation to retrofit. Should any discrepancy appear to exist, please contact the distributor's Service Division.

WARNING : Static discharges can destroy expensive components. Discharge any static electricity your body may have accumulated by grounding yourself to the ground bus in the unit (heavy gauge black wires connect to this bus.)

IMPORTANT : Turn the unit OFF during disassembly and parts replacement. Recheck all work before you apply power to the unit.

WARNING

Components having special characteristics are marked ⚠ and must be replaced with parts having specification equal to those originally installed.

SAVING DATA



Be sure to perform it

Saving and backing up your data

Some data items are automatically saved as backup data in the internal memory even if you turn the power off. Saved data may be lost due to malfunction or incorrect operation. Save important data to external device such as a computer.

SPECIFICATIONS

Product Name			Digital Keyboard
Size/Weight	Dimensions (W x D x H)		945 mm x 369 mm x 118 mm (37-3/16" x 14-1/2" x 4-5/8")
	Weight		4.6 kg (10 lb 2 oz) (not including batteries)
Control Interface	Keyboard	Number of Keys	61
		Touch Response	Soft, Medium, Hard, Fixed
	Display	Type	LCD
		Backlight	Yes
		Language	English
	Panel	Language	English
Voices	Tone Generation	Tone Generation Technology	AWM Stereo Sampling
	Polyphony (max.)		48
	Preset	Number of Voices	622 (241 Panel Voices + 22 Drum/SFX kits + 20 Arpeggio + 339 XGlite Voices)
	Compatibility		GM/XGlite
Effects	Types	DSP	38 types
		Reverb	12 types
		Chorus	5 types
		Master EQ	6 types
	Functions	Dual	Yes
		Split	Yes
		Sustain	Yes
		Harmony	26 types
		Arpeggio	150 types
		Melody Suppressor	Yes
		Articulation	Yes (11 Super Articulation Lite Voices)
Accompaniment Styles	Preset	Number of Styles	205
		Fingering	Smart Chord, Multi finger
		Style Control	ACMP ON/OFF, SYNC START, START/STOP, INTRO/ENDING/rit., MAIN/AUTO FILL
	External Styles		10
	Other Features	Music Database	170
		One Touch Setting (OTS)	Yes
	Compatibility		Style File Format (SFF)
Songs (MIDI)	Preset	Number of Preset Songs	154 (including Touch Tutor: 10, Chord Study: 12, Chord Progression: 30)
	Recording	Number of Songs	5
		Number of Tracks	2
		Data Capacity	Approx. 10,000 notes
	Format	Playback	SMF Formats 0 & 1
		Recording	Original File Format
Functions	Lesson		KEYS TO SUCCESS, Lesson 1–3 (Listening, Timing, Waiting), Phrase Repeat, A-B Repeat, Chord Dictionary, Touch Tutor, Chord Study, Chord Progression
	USB Audio (USB TO HOST)		44.1 kHz, 16 bit, stereo
	Registration Memory	Number of Buttons	9
	Overall Controls	Metronome	Yes
		Tempo Range	11–280
		Transpose	-12 to 0, 0 to +12
		Tuning	427.0–440.0–453.0 Hz (approx. 0.2 Hz increments)
		Duo	Yes
	Miscellaneous	PIANO Button	Yes (Portable Grand Button)
Storage and Connectivity	Storage	Internal Memory	Approx. 1.4 MB
	Connectivity	DC IN	12 V
		Headphones/Output	Standard stereo phone jack (PHONES/OUTPUT)
		Sustain Pedal	Yes
		AUX IN	Yes (Stereo mini jack)
		USB TO HOST	Yes
Sound System	Amplifiers		2.5 W + 2.5 W
	Speakers		12 cm x 2

Power Supply	Power Supply	AC Adaptor	Users within U.S or Europe: PA-130 or an equivalent recommended by Yamaha Others: PA-3C,PA-130 or an equivalent recommended by Yamaha
		Batteries	Six 1.5 V "AA" size alkaline (LR6), manganese (R6) or six 1.2 V "AA" size Ni-MH rechargeable batteries (HR6)
	Power Consumption		5 W (When using PA-130 AC adaptor)
	Auto Power Off		Yes (Time can be set)
Included Accessories			• Music rest • Owner's Manual • AC adaptor *1 (PA-130 or an equivalent recommended by Yamaha) • Online Member Product Registration *1: May not be included depending on your particular area. Please check with your Yamaha dealer.
Separately Sold Accessories (May not be available depending on your area.)			• AC adaptor: Users within U.S or Europe: PA-130 or an equivalent recommended by Yamaha Others: PA-3C, PA-130 or an equivalent recommended by Yamaha • Keyboard stand: L-2C • Headphones: HPH-50/HPH-100/HPH-150 • Footswitch: FC4A/FC5

* The contents of this manual apply to the latest specifications as of the publishing date. To obtain the latest manual, access the Yamaha website then download the manual file. Since specifications, equipment or separately sold accessories may not be the same in every locale, please check with your Yamaha dealer.

PANEL LAYOUT

Front Panel

NOTE

• The illustrations and displays as shown in this manual are based on the PSR-E373.

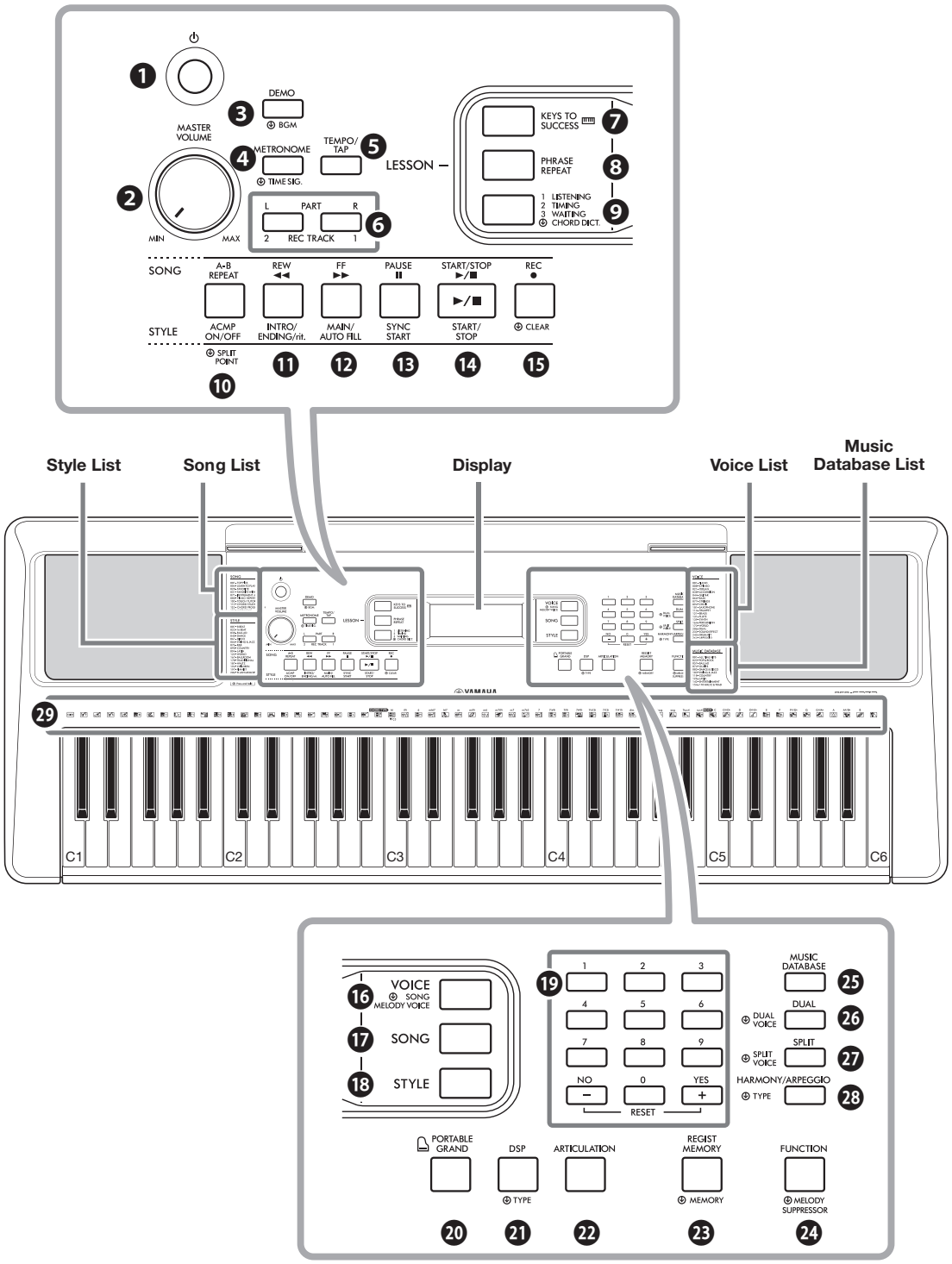

❶ **[⏻] (Standby/On) switch**
❷ **[MASTER VOLUME] dial**
❸ **[DEMO] button**
❹ **[METRONOME] button**
❺ **[TEMPO/TAP] button**

In the Lesson mode

❻ **PART**
[L] button
[R] button

In the Recording mode

❻ **[REC TRACK 2] button**
[REC TRACK 1] button

---

❼ **[KEYS TO SUCCESS] button**
❽ **[PHRASE REPEAT] button**
❾ **[1 LISTENING 2 TIMING 3 WAITING] button**

In the Song mode

❿ **[A-B REPEAT] button**
⓫ **[REW] button**
⓬ **[FF] button**
⓭ **[PAUSE] button**

In the Style mode

❿ **[ACMP ON/OFF] button**
⓫ **[INTRO/ENDING/rit.] button**
⓬ **[MAIN/AUTO FILL] button**
⓭ **[SYNC START] button**

⓮ **[START/STOP] button**
⓯ **[REC] button**
⓰ **[VOICE] button**
⓱ **[SONG] button**
⓲ **[STYLE] button**
⓳ **Number buttons [0]–[9], [+/YES], [-/NO]**
⓴ **[PORTABLE GRAND] button**
㉑ **[DSP] button**
㉒ **[ARTICULATION] button**
㉓ **[REGIST MEMORY] button**
㉔ **[FUNCTION] button**
㉕ **[MUSIC DATABASE] button**
㉖ **[DUAL] button**
㉗ **[SPLIT] button**
㉘ **[HARMONY/ARPEGGIO] button**
㉙ **Drum illustrations for the Drum Kit**
Each of these indicates the drum or percussion instrument assigned to the corresponding key for “Standard Kit 1.”

Rear Panel

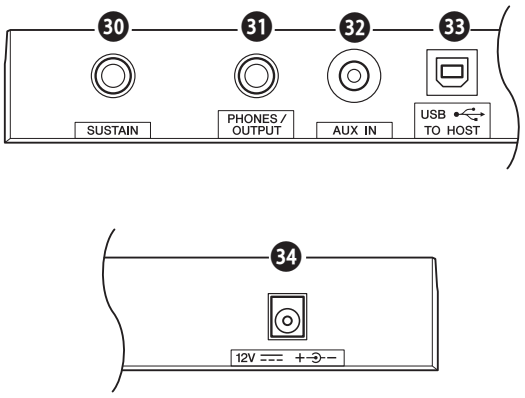

㉚ **[SUSTAIN] jack**
㉛ **[PHONES/OUTPUT] jack**
㉜ **[AUX IN] jack**
㉝ **[USB TO HOST] terminal***
㉞ **DC IN jack**

■ CIRCUIT BOARD LAYOUT & WIRING

● UPPER CASE ASSEMBLY

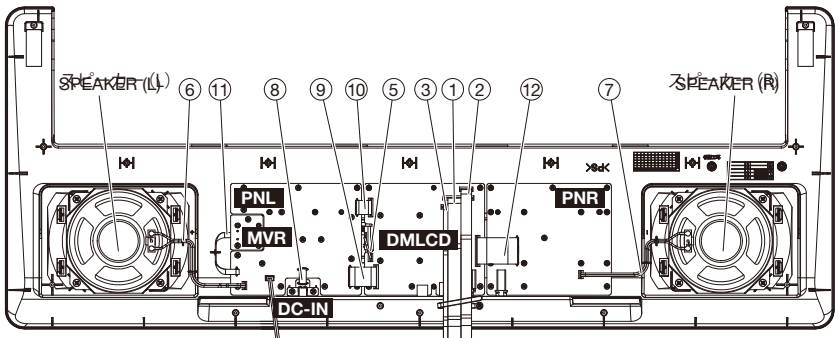

● LOWER CASE ASSEMBLY

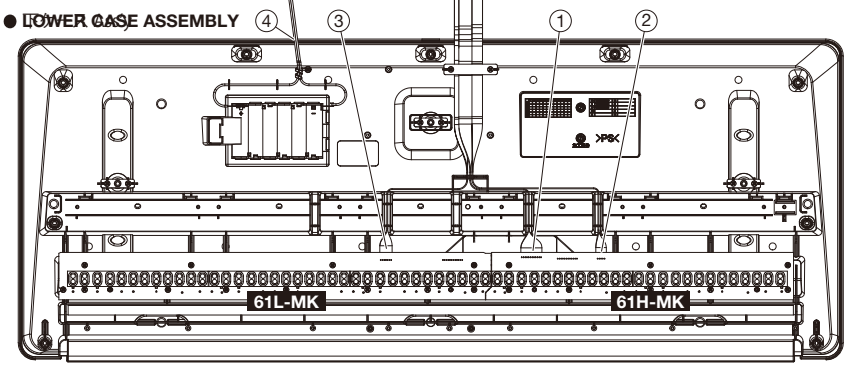

Table Wiring assemblies list

No.	Unit Name	Location	Parts No.	Connector Assembly	Destination						Remarks
①	LOWER CASE ASSEMBLY	210	(ZW81300) or (ZZ73990)	MK11	61H-MK - CN01	*1	*4	DMLCD - CN503	*1	*4	12P L=550
②		220	(ZW81310) or (ZZ74000)	MK12	61H-MK - CN02	*1	*4	DMLCD - CN502	*1	*4	5P L=620
③		230	(ZW81320) or (ZZ74010)	MK13	61L-MK - CN05	*1	*4	DMLCD - CN501	*1	*4	7P L=550
④		250	(VDM2390)	BATT	BATTERY TERMINAL (+/-)	*2	*5	PNL - CN103	*1	*9	3P L=240
⑤		350	(WE14140)	BL	BACK LIGHT ASSEMBLY	*2	*6	DMLCD - CN303	*1	*4	2P L=70
⑥	UPPER CASE ASSEMBLY	500	(ZW81430)	SP1	SPEAKER L	*2	*7	PNL - CN107	*1	*4	2P L=165
⑦		500	(ZW81430)	SP1	SPEAKER	*2	*7	PNR - CN202	*1	*4	2P L=165
⑧		WH010	(ZA17370)		PNL - CN101	*3	*8	DC-IN(PNL) - CN102	*3	*8	4P L=50
⑨	PNL and PNR CIRCUIT BOARD	WH020	(ZA18500)		PNL - CN104	*3	*8	DMLCD - CN801	*1	*4	11P L=75
⑩		WH030	(ZA18010)		PNL - CN106	*3	*8	DMLCD - CN301	*1	*4	8P L=50
⑪		WH040	(ZA17230)		PNL - CN105	*3	*8	MVR(PNL) - CN301	*3	*8	3P L=100
⑫		WH050	(ZW76710)		PNR - CN201	*3	*8	DMLCD - CN302	*1	*4	15P L=100

Connection Method
*1: Insertion
*2: Manual soldering
*3: Dip soldering

Connection Direction
*4: Edge mark is adjusted to Pin 1 mark (△mark).
*5: Red wire is connected to (+) terminal. Black wire is connected to (-) terminal.
*6: Black wire is adjusted to (-) terminal.
*7: Red wire is connected to (+) terminal.
*8: Connected
*9: Red wire is adjusted to Pin 1 mark (△mark).

* The parts with "( )" in "Part No." are not available as spare parts.

Caution:

- Be sure to attach the removed filament tape just as it was before removal.

BLOCK DIAGRAM

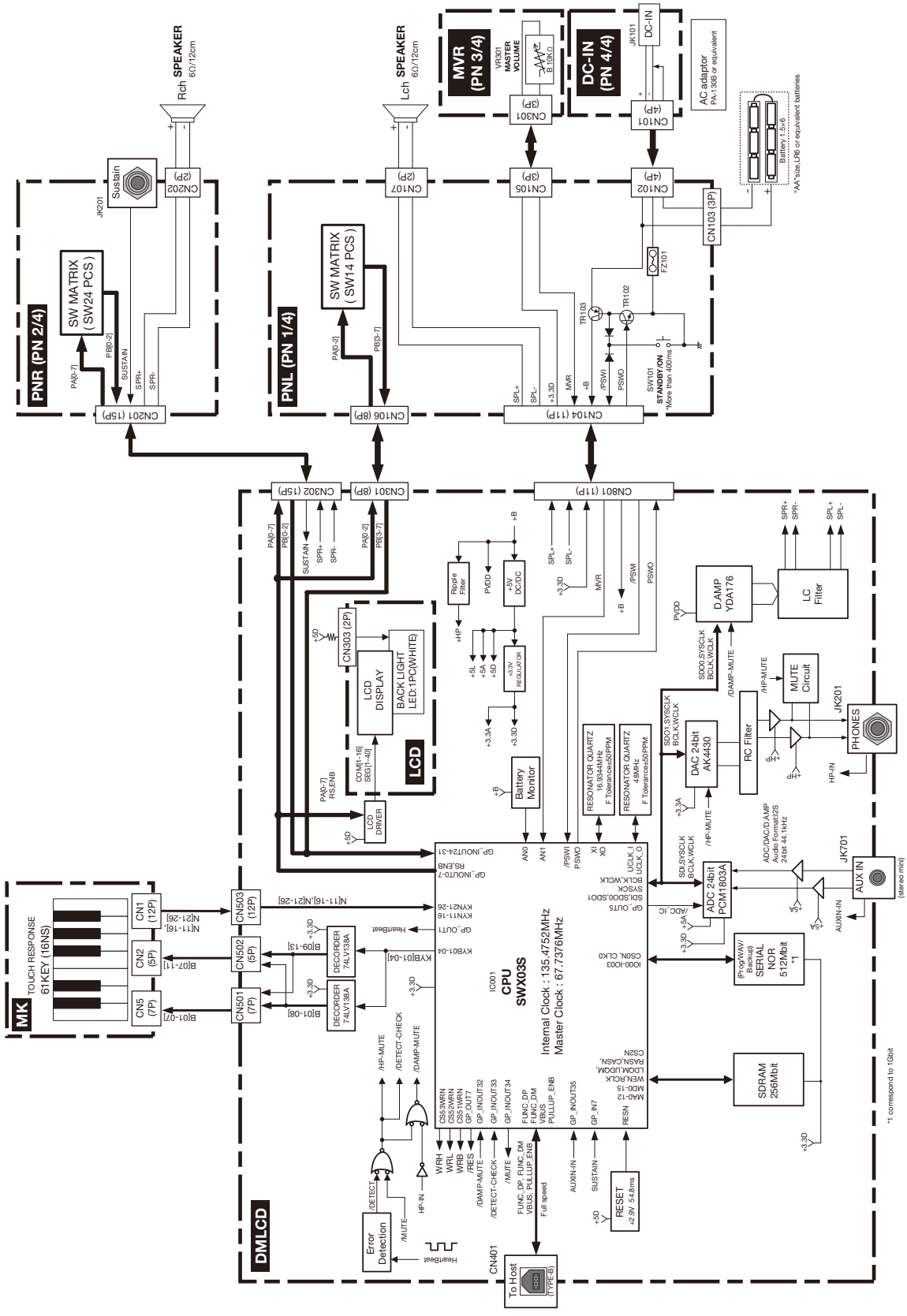

■ DISASSEMBLY PROCEDURE

Caution:

- Be sure to attach the removed filament tape just as it was before removal.

1. Lower Case Assembly (Time required: About 3 minutes)

1. Remove the 5 screws marked [120] and the 9 screws marked [100]. The lower case assembly can then be removed. (Fig.1)

* ***When installing the lower case assembly, first tighten the screw marked [100A] and then the remaining screws. (Fig.1)***

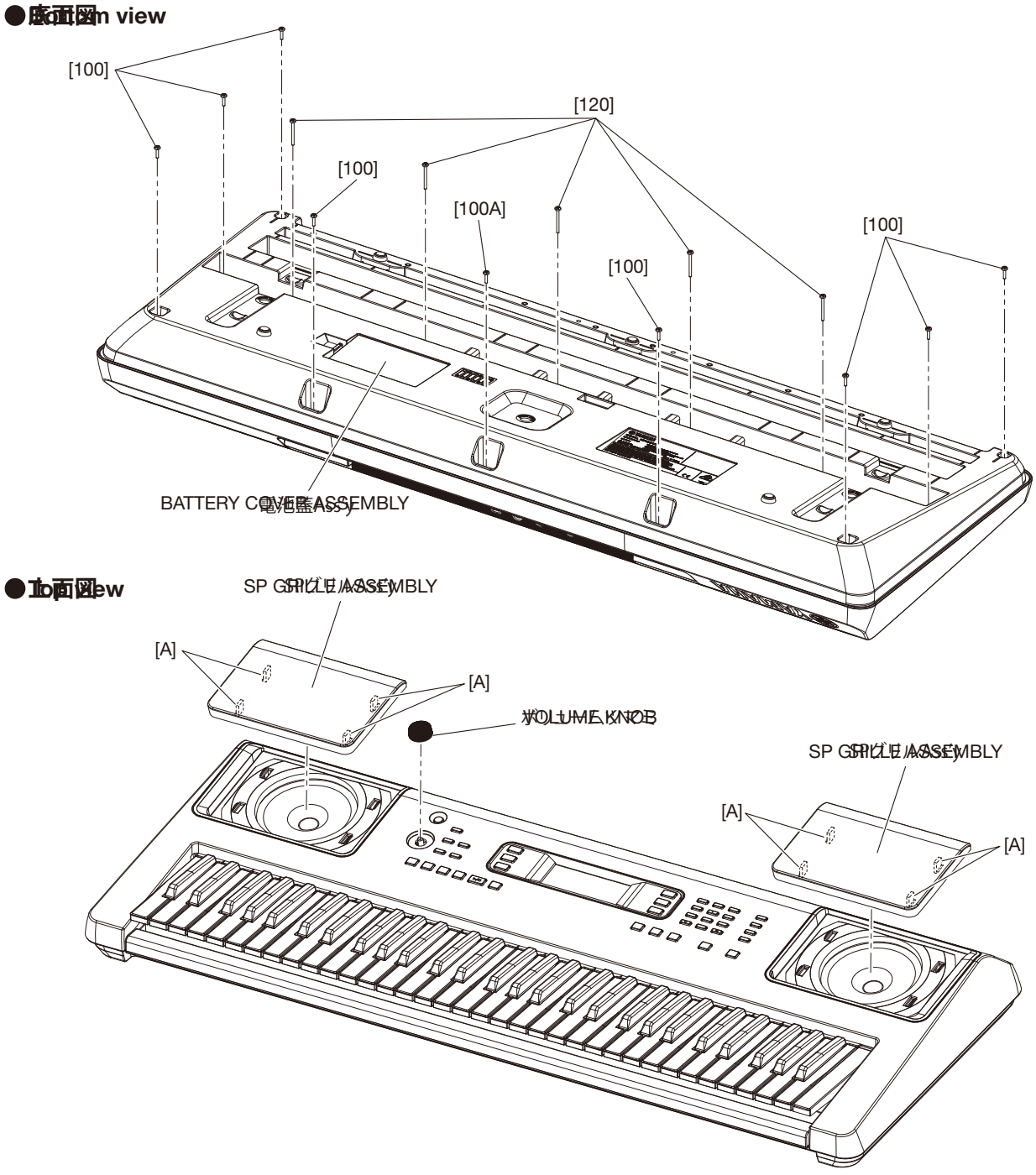

Fig.1

2. DMLCD Circuit Board (Time required: About 6 minutes)

1. Remove the lower case assembly. (See procedure 1)
2. Remove the 12 screws [380A]. The DMLCD circuit board can then be removed. (Fig.2)

* ***When installing the DMLCD circuit board, tighten the screws 1 through 2 in numerical order. (Fig.2)***

* ***After replacing the DMLCD circuit board, execute "Factory Reset" in the Test program.***

●底面図 Bottom view

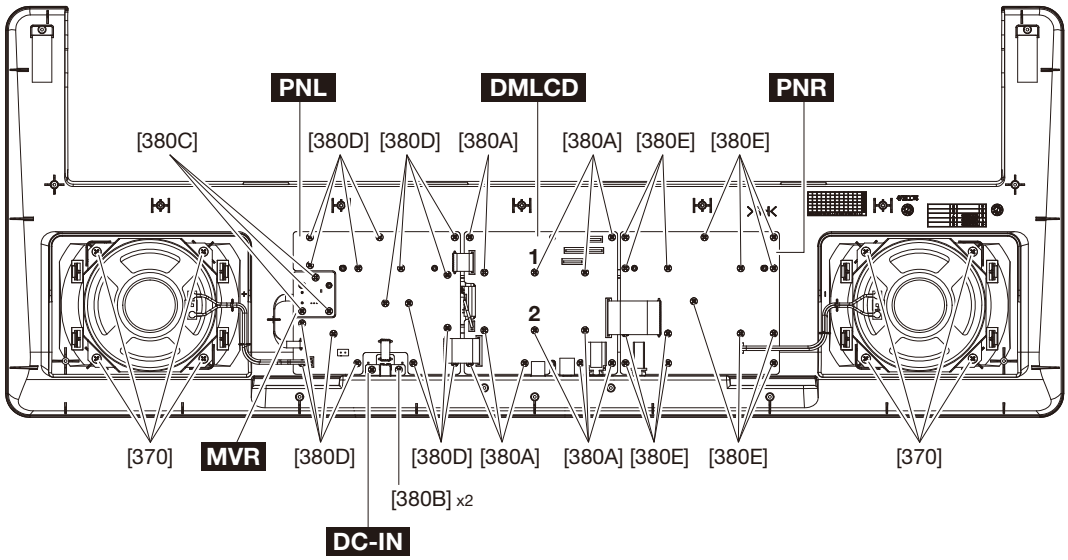

Fig.2

3. LCD (Time required: About 7 minutes)

1. Remove the lower case assembly. (See procedure 1)
2. Remove the DMLCD circuit board. (See procedure 2)
3. Remove the back light assembly. (Fig.3)
4. Remove the rubber connector. (Fig.3)
5. Remove the LCD display. (Fig.3)

* ***Avoid touching the conductive part of the rubber connector as much as possible. Should foreign matter or dirt adhere, remove such contamination using adhesive tape or the like. Do not wipe off using solvents such as benzene or alcohol. (Fig.3)***

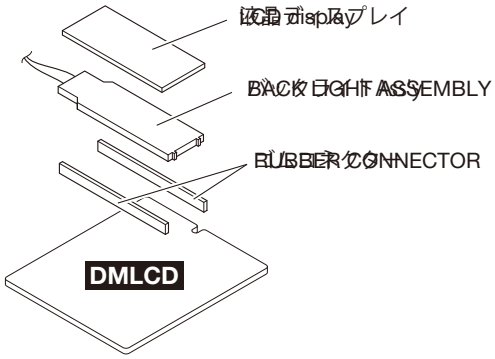

Fig.3

4. PNR Circuit Board, PNL Circuit Board, MVR Circuit Board, DC-IN Circuit Board

1. Remove the lower case assembly. (See procedure 1)

- PNL, MVR Circuit Board (Time required: About 8 minutes)
    1. Remove the 2 screws [380B]. The DC-IN circuit board can then be removed. (Fig.2)
    2. Remove 3 screws [380C]. The MVR circuit board can then be removed. (Fig.2)
    3. Remove the knob from the control panel surface. (Fig.1, Fig.4)
    4. Remove the 16 screws marked [380D]. The PNL circuit board can then be removed. (Fig.2)
- PNR Circuit Board (Time required: About 6 minutes)
    1. Remove 15 screws [380E]. The PNR circuit board can then be removed. (Fig.2)

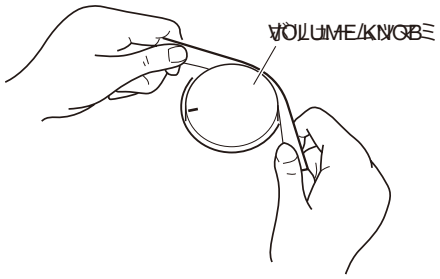

Fig.4

5. Speaker (Time required: About 4 minutes each)

1. Remove the lower case assembly. (See procedure 1)
2. Remove the 4 screws marked [370]. The speaker can then be removed. (Fig.2)

* ***Remove the right and left speakers in the same way.***

6. Speaker Grille (Time required: About 4 minutes each)

1. Remove the lower case assembly. (See procedure 1)
2. Release the 4 claws marked [A] of the SP grille. The SP grille can then be removed. (Fig.1)

* ***The right and left SP grilles can be removed in the same manner.***

* ***SP grilles can be changed without removing the lower case assembly.***

Tear the saran net. Release the 4 claws marked [A] of the SP grille by pushing them with the slotted screwdriver to inward. Remove the SP grille. (Fig.5)

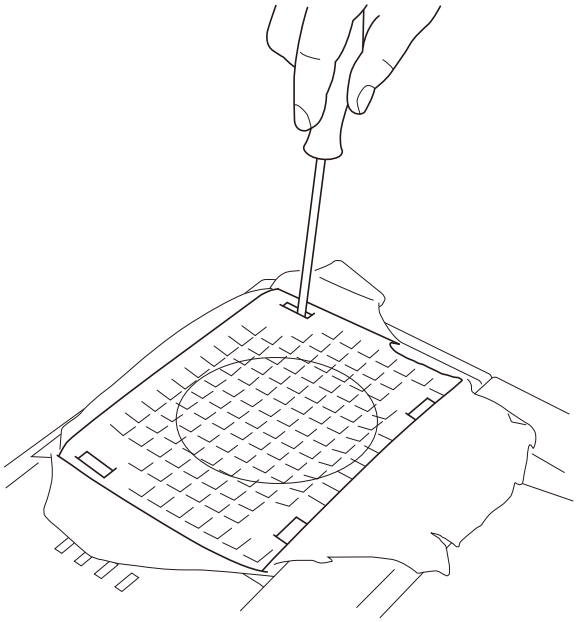

Fig.5

7. Disassembling the keyboard (time required: About 13 minutes)

1. Remove the lower case assembly. (See procedure 1)

- White keys and black keys

    1. The white and black keys are grouped in single octave sets starting from the left side and consist of a total of five sets. Only the C6 white key, unlike the other keys, is not included in a set. (Fig.6)
    2. To remove a set, remove the 2 each screws marked [120A]. The white and black keys in the set can then be removed. (Fig.6)
       When removing, unfasten the 2 hooks at the back of the black keys upward, and lift the white and black keys while pulling them toward you a little. (Photo 1)
    3. To remove the white key C6, remove the screw marked [120B], unhook as described in previous procedure, and pull out toward you. (Fig.6)

* ***To reassemble after all white and black keys have been removed, first, mount by aligning the C3 to B3 white and black keys with the boss, and then mount the remaining white and black keys. (Fig.6)***

- Rubber contacts

    1. Remove the white and black keys corresponding to the rubber contacts to be removed. (See Fig.6 and "●White keys and black keys" in procedure 7)
    2. Remove the respective rubber contacts. (Fig.6)

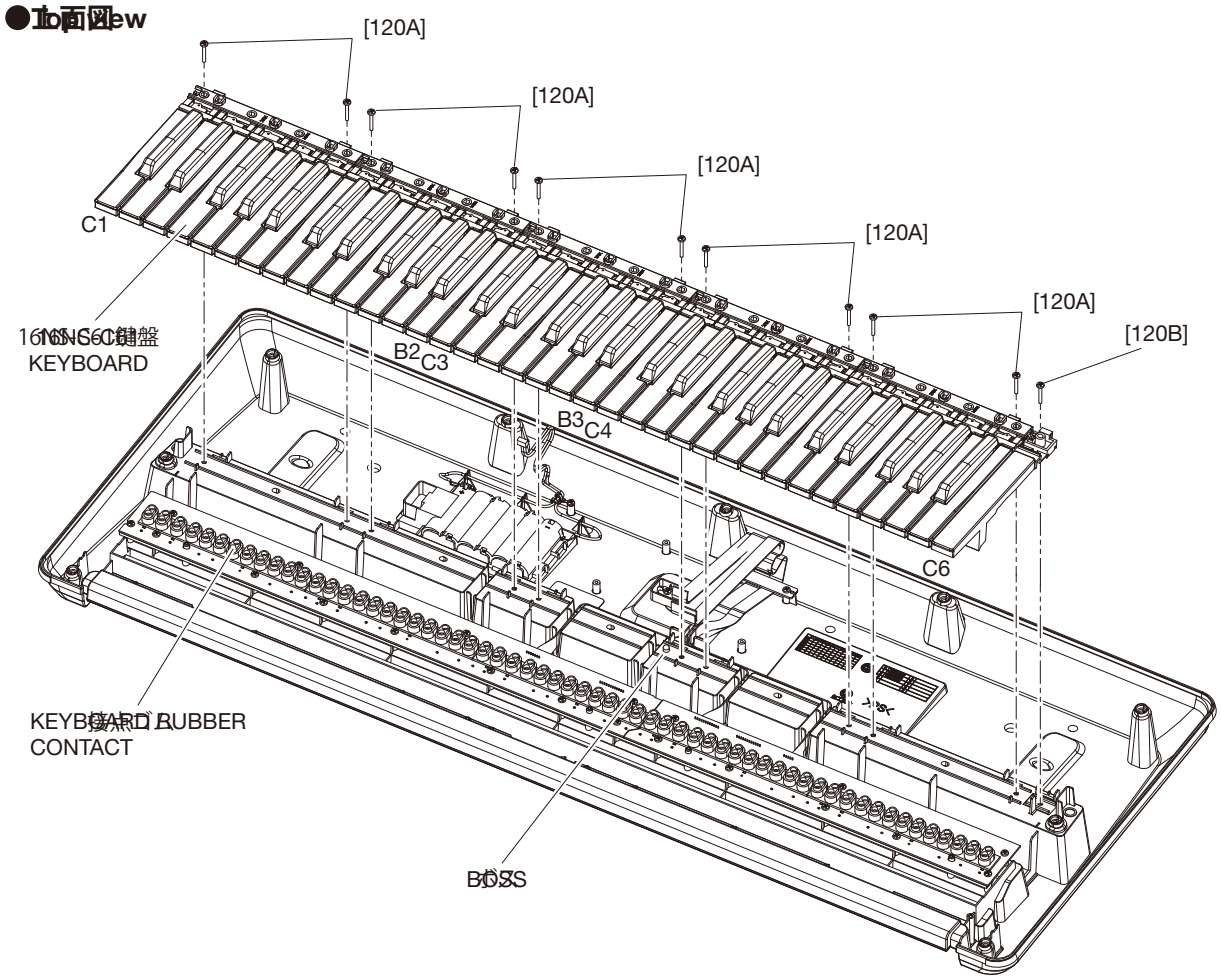

Fig.6

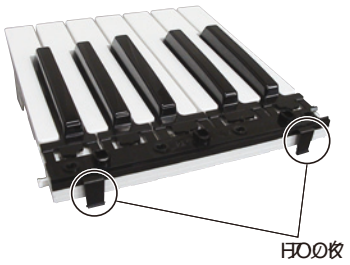

Photo1

- Circuit Board 61L-MK
  1. Remove the C1 to B3 white and black keys. (See Fig.6 and "●White keys and black keys" in procedure 7)
  2. Remove the 4 screws marked [100C] and 8 screws marked [100A]. The circuit board 61L-MK can then be removed. (Fig.7)

* ***When installing the circuit board 61L-MK, tighten the screws from No. 1 to 12 in the numerical order as shown in the figure "61L-MK" in Fig.8. (Fig.8)***

- Circuit Board 61H-MK
  1. Remove the C4 to C6 white and black keys. (See Fig.6 and "●White keys and black keys" in procedure 7)
  2. Remove the 3 screws marked [100D] and 5 screws marked [100B]. The circuit board 61H-MK can then be removed. (Fig.7)

* ***When installing the circuit board 61H-MK, tighten the screws from No. 1 to 8 in the numerical order as shown in the figure "61H-MK" in Fig.8. (Fig.8)***

●上面図 Top view

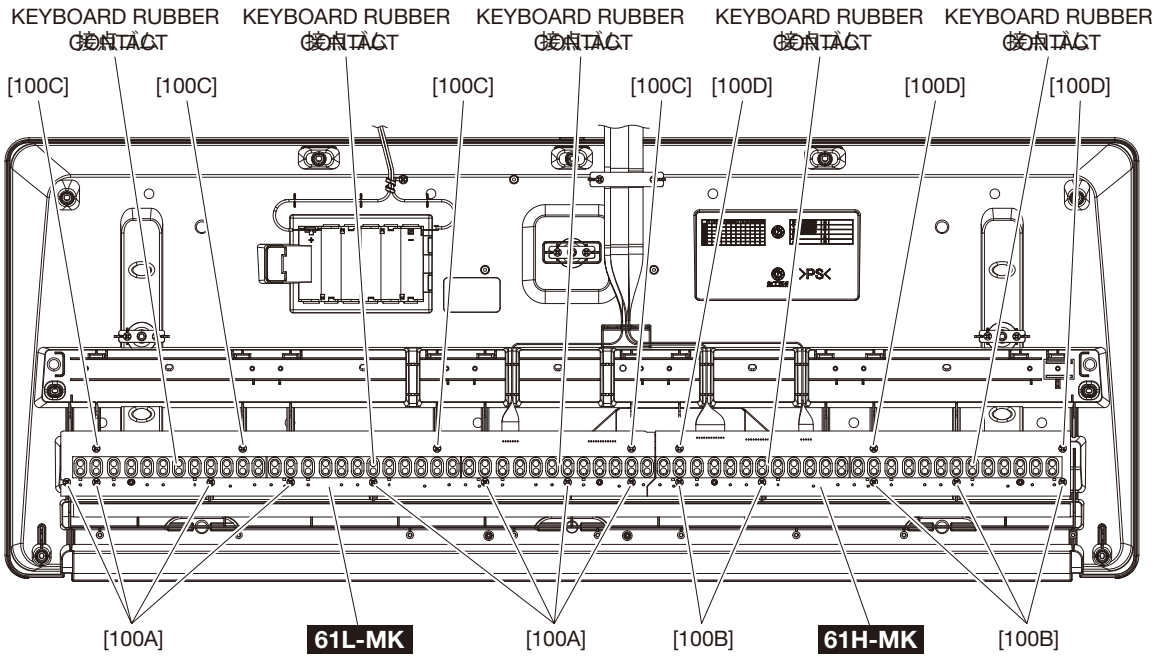

Fig.7

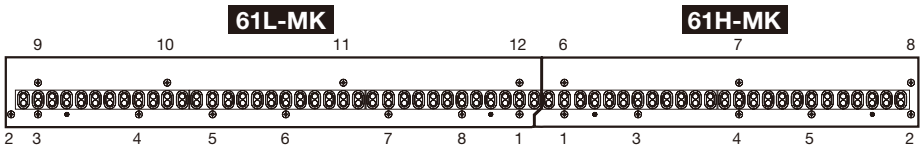

Fig.8

8. Removing the Spring Terminals

- Spring terminal A and spring terminal B (Time required: About 8 minutes)
  1. Remove the lower case assembly. (See procedure 1)
  2. Remove the BATT ribbon cable soldered to spring terminals A and B. (Fig.9)
  3. Flip over the lower case assembly, and remove the battery cover assembly. (Fig.1)
  4. Spring terminal A is removed by slowly lifting upward and then sliding to the top right. (Fig.9)
  5. To remove spring terminal B, release the hook, and pull it out from the inside. (Fig.9)
- Spring terminal C and spring terminal D (Time required: About 1 minute each)
  1. Remove the battery cover assembly. (See "●Spring terminal A and spring terminal B" in procedure 8)
  2. Release the hooks, and pull out spring terminals C and D. (Fig.9)

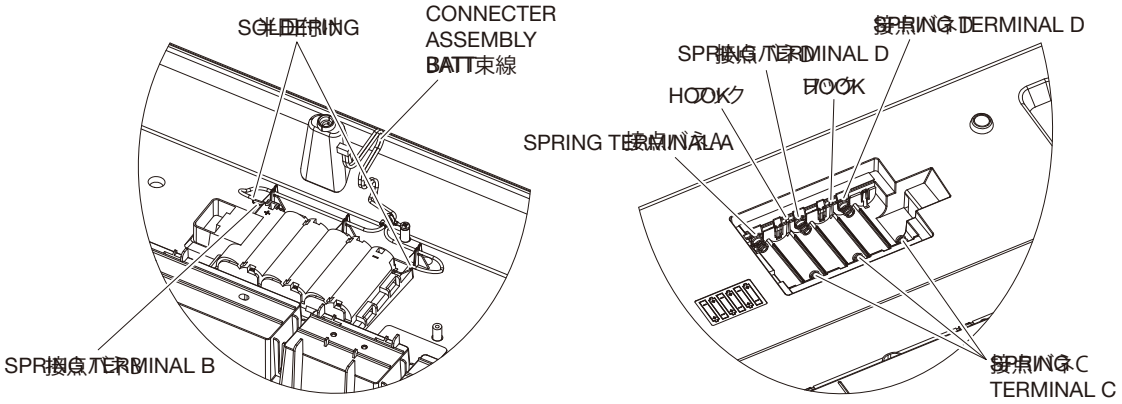

Fig.9

■ CIRCUIT BOARDS

CONTENTS

PNL with MVR/DC-IN Circuit Board (YJ069C0)..... 17
DMLCD Circuit Board (YK716D0)..... 18
PNR Circuit Board (YJ069C0)..... 20
61H-MK Circuit Board (X2335D0)..... 21
61L-MK Circuit Board (X2336C0)..... 21

Note:

- For details on the circuit board parts, see the Parts List.

● **PNL with MVR/DC-IN Circuit Board (YJ069C0)**

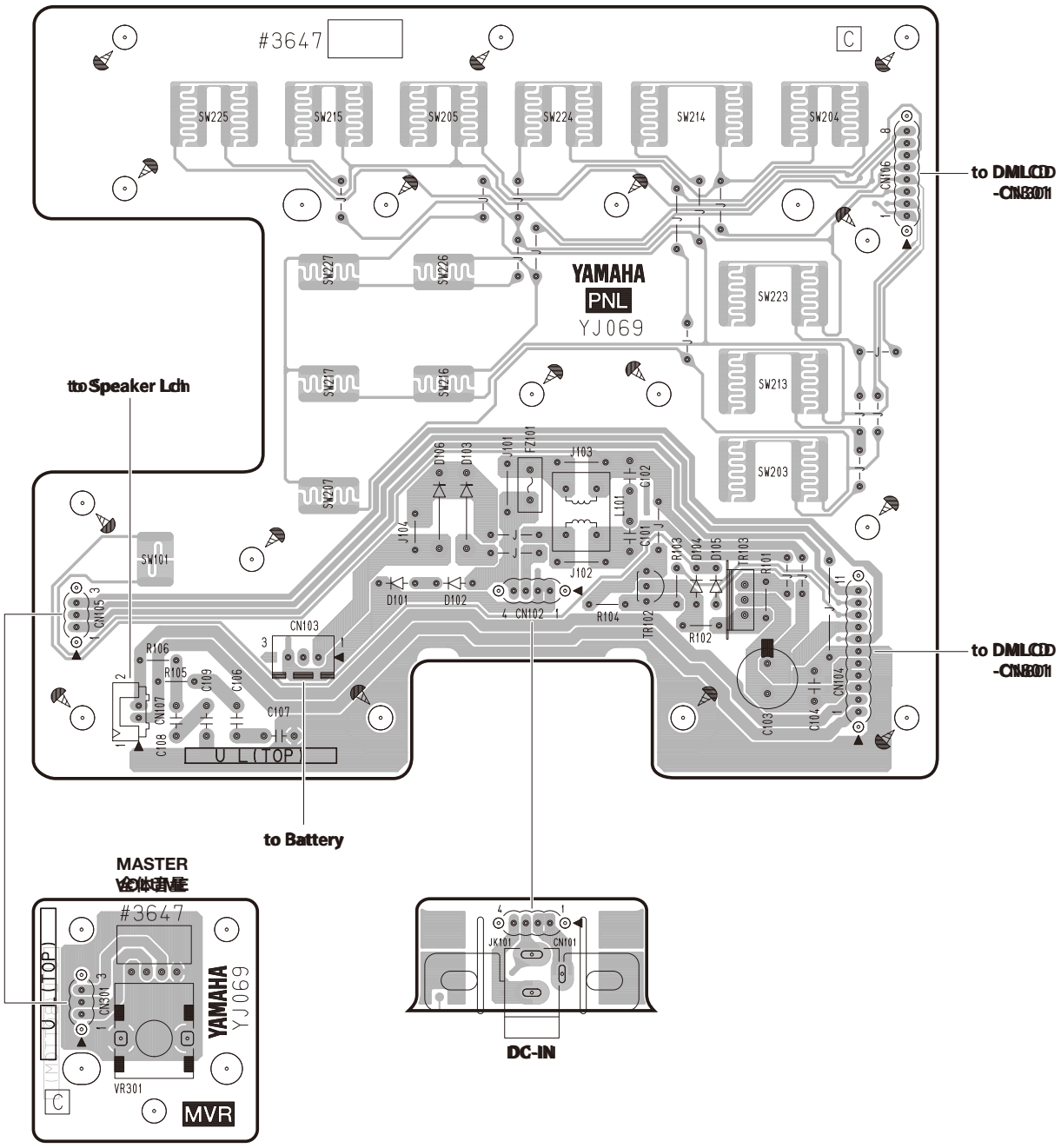

Component Side
2NA-ZV85630 ⚠2

● DMLCD Circuit Board (YK716D0)

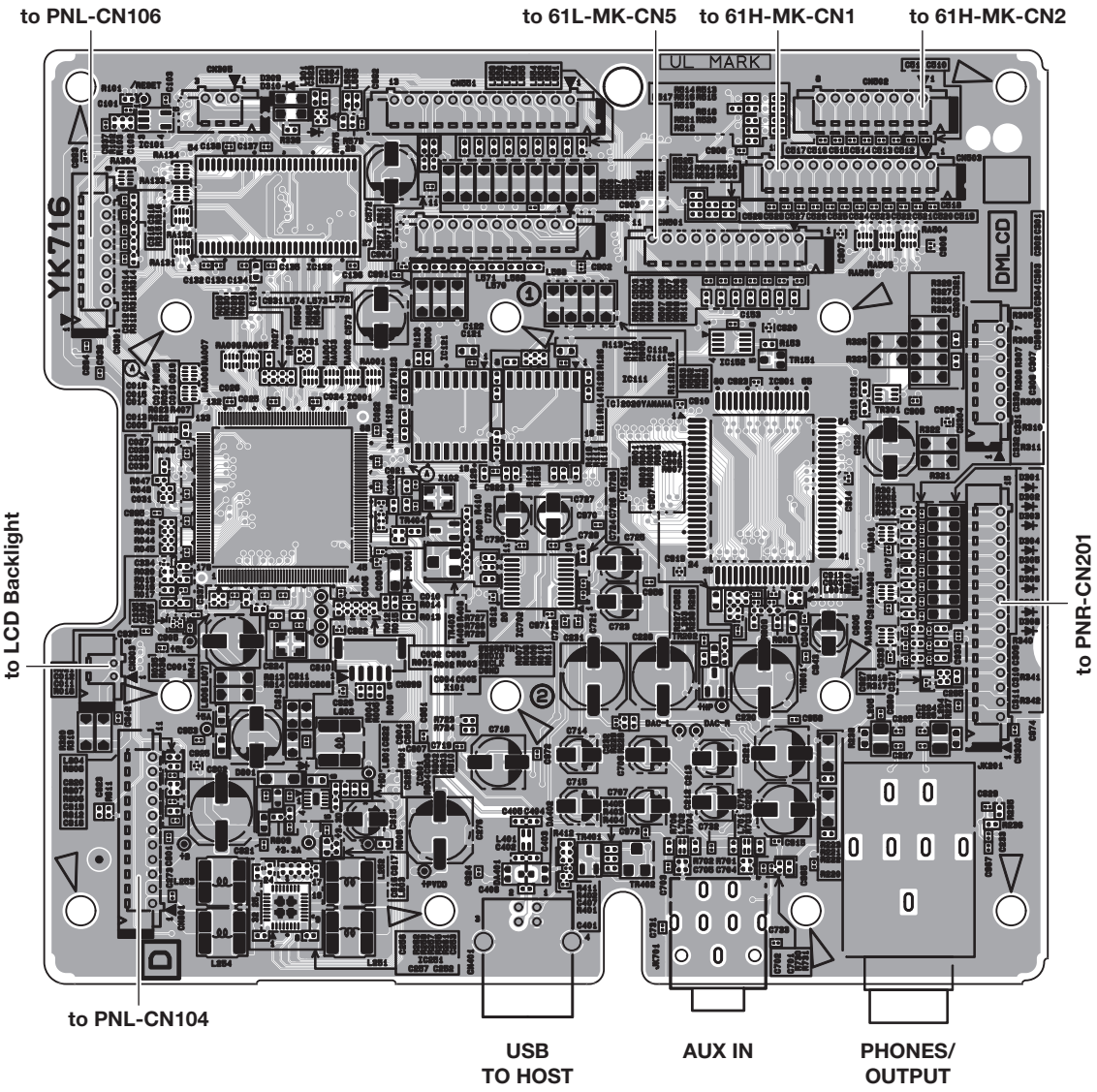

Component Side

2NA-VCX5040 2

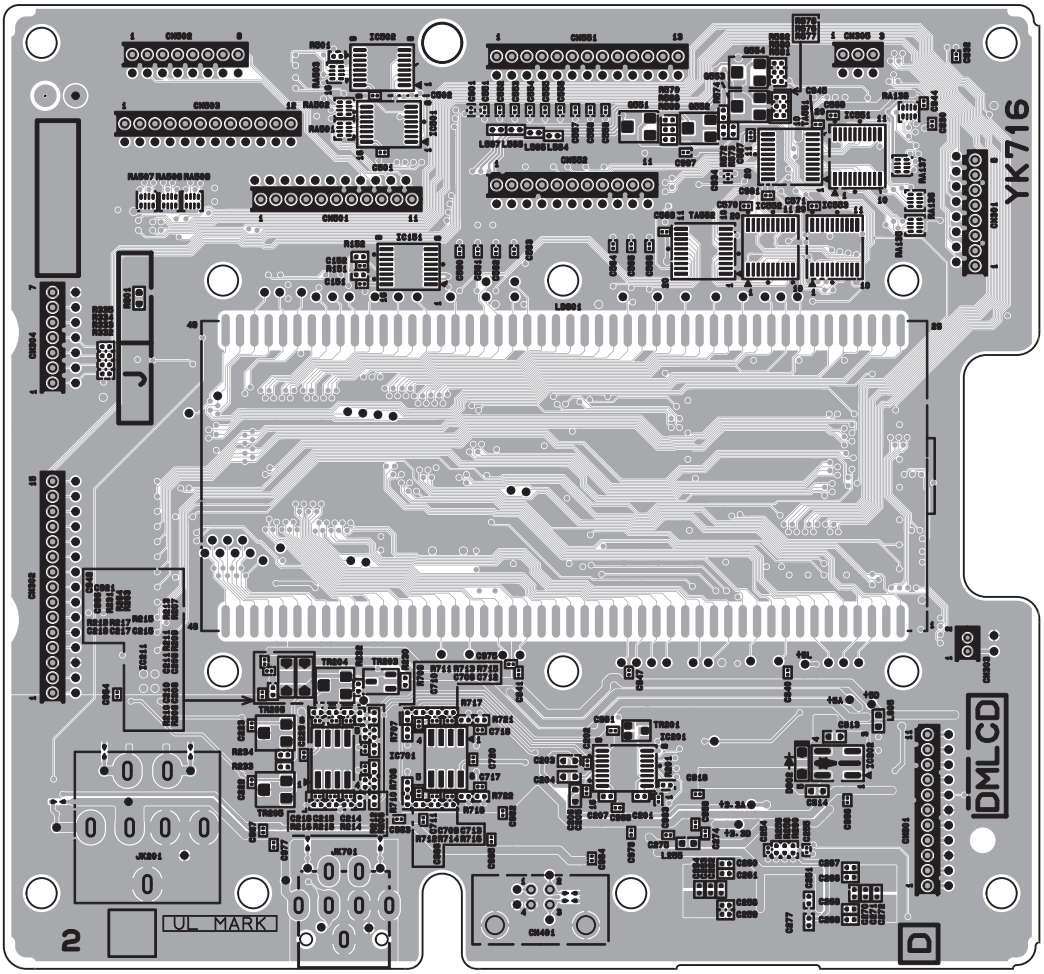

Pattern Side

2NA-VCX5040 △2

● PNR Circuit Board (YJ069C0)

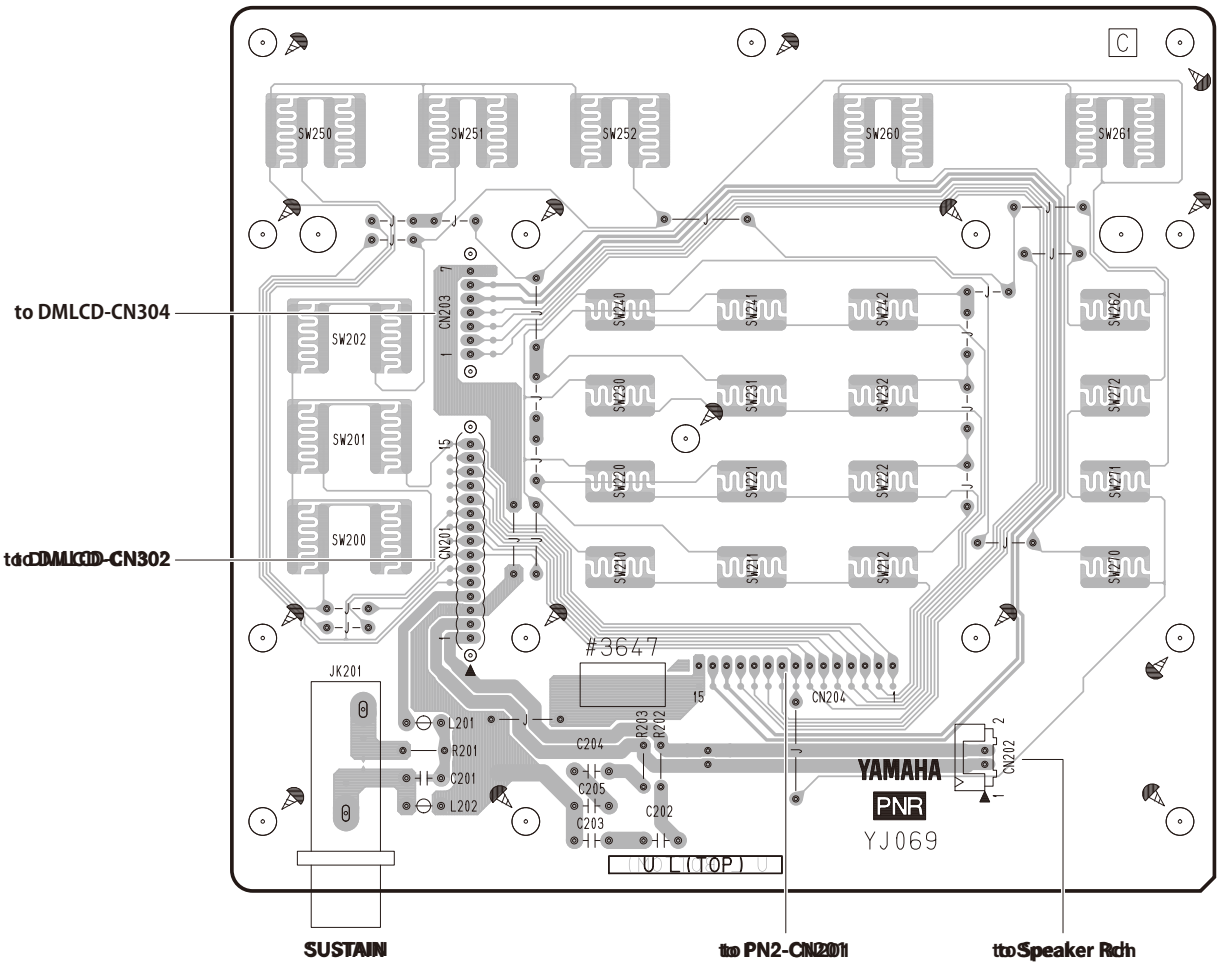

Component Side

2NA-ZV85630 2

● 61H-MK Circuit Board (X2335D0)

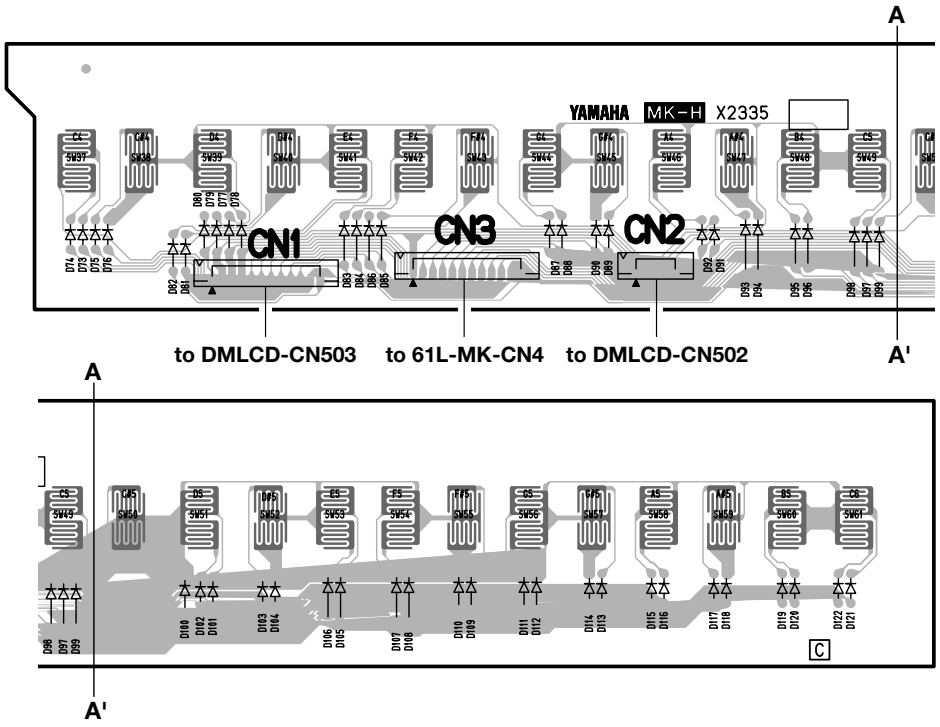

Component Side
2NAKB-V869540

● 61L-MK Circuit Board (X2336C0)

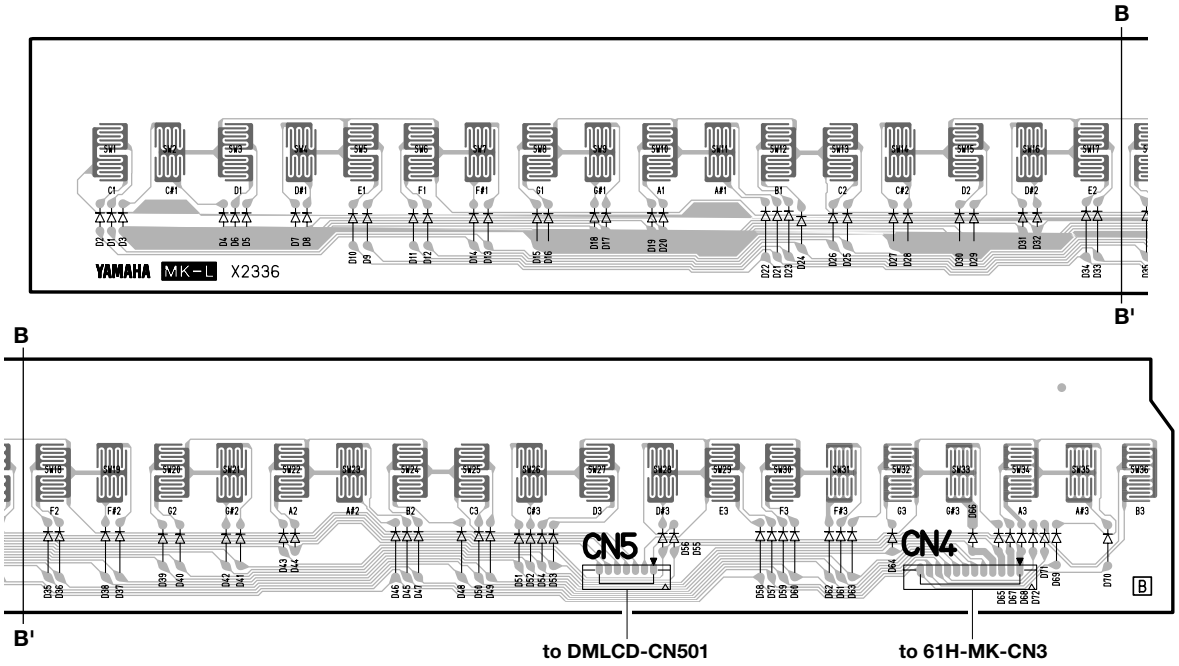

Component Side
2NAKB-V869520

DMLCD Circuit Board Check Method

The DMLCD Circuit Board has the test points for repair check purposes.

Check the test points on the DMLCD Circuit Board when the following problems happen.

Problems and Test points

- No display although turning on the power ⇒ Check the test points from No.1 to 6 sequentially.
- No sound or distorted sound --> Check the test points No.3, 5, 7 and 8.

Table Point List

NO.	Test Point	Circuit	Judgment criteria	Measured by	Parts with possible defects
①	+B	Power supply voltage	More than 11.0V	Multimeter	TR103 or FZ101 (On PNL Circuit Board)
②	+5D	5V power for digital circuit	5.0V±0.5V	Multimeter	IC801
③	+5A	5V power for analog circuit	5.0V±0.5V	Multimeter	IC801
④	+3.3D	3.3V power for digital circuit	3.3V±0.3V	Multimeter	IC802
⑤	+3.3A	3.3V power for analog circuit	3.3V±0.3V	Multimeter	IC802
⑥	/RESET	CPU & memory reset signal	3.3V±0.3V	Multimeter	IC101
⑦	DAC-L	DAC output L channel	There shall be audio output without distortion.	Signal Checker	IC201
⑧	DAC-R	DAC output R channel	There shall be audio output without distortion.	Signal Checker	IC201

Caution:

- Use the standard AC adaptor PA-130, PA-130B or PA-130U for check operation.

DMLCD Circuit Board (VCX50800)

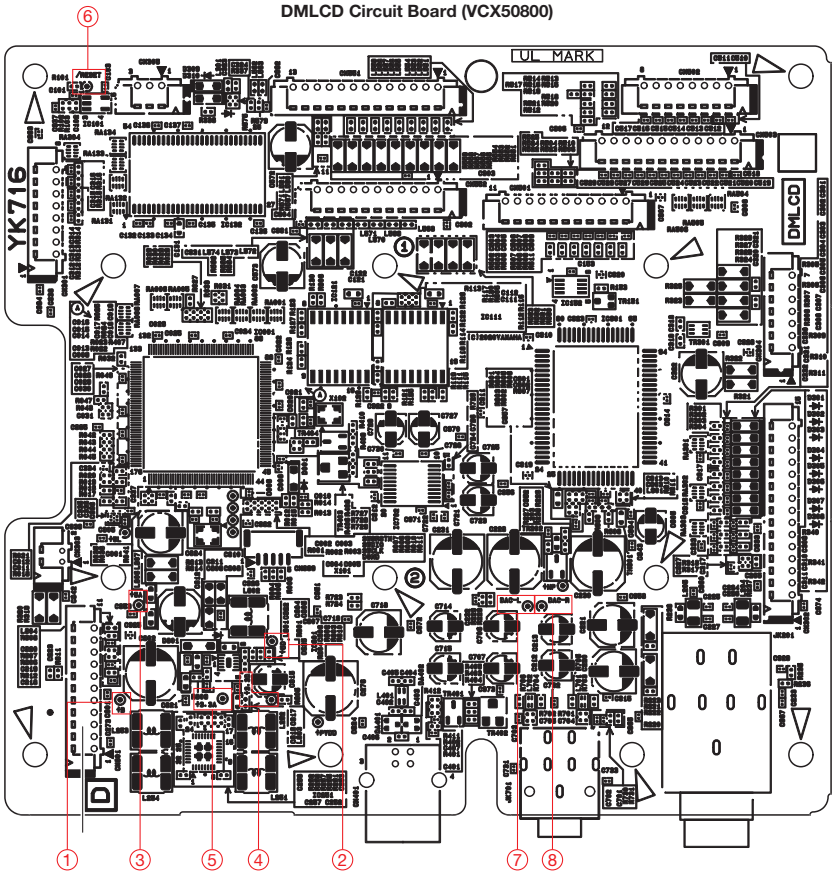

Component Side

TEST PROGRAM

Caution:

- The Test No.065 “Factory Reset” will delete all setup data (included the data that the customer has purchased). Be sure to save the important data to a computer via Musicsoft Downloader software, or tell this to the customer in advance.

1. Measurement conditions

1-1. Environment

Perform testing under following conditions.

- Ordinary temperature (5 to 40°C)
- Ordinary humidity (20 to 90 %)

If the test results deviate from the test standard range, however, re-test under such conditions as the ordinary temperature (5 to 40°C) and ordinary humidity (30 to 90 % of relative humidity).

1-2. Power supply

Use an AC adaptor: PA-130, PA-130B or PA-130U

1-3. Measuring instruments

▪ Frequency counter (capable of measuring to three or more decimal places)	(for pitch measurement)
▪ Level meter	(for output level measurement)
▪ Oscilloscope	(for measuring popping noise)

* Use instruments with an input impedance of 1 MΩ or more.

1-4. Test jigs

▪ Foot switch (FC-4A or FC5)	(for inspecting [SUSTAIN] jack)
▪ Oscillator	(for input of sinusoidal waveform to [AUX IN] jack)
▪ Stereo mini-plug cable	(for inspecting [AUX IN] jack)

1-5. Jack connection state

- [PHONES/OUTPUT] jack: Install a measuring instrument (L, R ch: 33 Ω load)
- [SUSTAIN] jack: Connect a Foot switch before turning the power ON

1-6. Instrument settings

- MASTER VOLUME: MAX
- Other settings: the initial setup at turning the power ON.

2. Test Mode

2-1. Starting Test mode

1) While holding down the [C#2], [F2] and [G#2] keys simultaneously, press the [⏻] (Standby/On) switch.

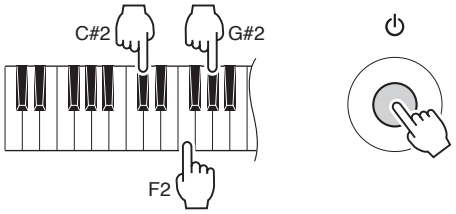

2) When Test mode is started, **"TEST"** is shown on the LCD screen.

2-2. Selection and execution of test items

1) Press the [+] or [-] buttons in the Number buttons area to select the test item.
2) Press the [START/STOP] button to start the test. Refer to the "Test Program Item List" regarding how to operate each test item.
3) Check the completed test.

   Check that the cursor **(_)** is displayed below the first character of the test item name. The **"_"** is displayed for items where the test results were OK.

Exiting a test item

Perform the procedure below depending on whether **"OK"** or **"NG"** is displayed.

2-3. When the test result shows OK

Press the [START/STOP] or [DEMO] button to return to selection of the test items.

2-4. When the test result is FAIL

Press the [DEMO] button or the lowest key ([C1] white key) to return to the selection of test items.

* If the result was FAIL, pressing the [START/STOP] button does not return to the selection of the test items.

2-5. Test Program Item List

No.	Test Program Item	Procedure for "Selection and execution of test items"
001	**ROM version**	This shows the ROM version. 1) Press the number [1] button. The version number of the main program is displayed as shown below. **"*** Main"** (***: Version)
004	**RAM Check1**	Executes the simplified check of the RAM connected to the CPU bus. 1) Check the test result. If no problem is found, **"Ram OK"** is shown on the LCD. If any problem is found, **"Ram NG"** is shown on the LCD.
009	**Pitch Check**	Checks whether the correct pitch is output from this instrument. 1) Before pressing the [START/STOP] button, connect the Frequency Counter to the [PHONES/OUTPUT] jack on the rear panel. (Either L or R ch) 2) Press the [START/STOP] button to produce the A3 sound. 3) Check the Frequency counter indication. No problem: the indication is with in 441.00 ± 0.2 Hz. 4) Press the [START/STOP] button to stop the A3 sound. The LCD screen returns to the test program selection display.
011	**Output level R Check**	Checks whether the stereo R sound is output from the [PHONES/OUTPUT] jack properly. 1) Before pressing the [START/STOP] button, connect the level meter to the [PHONES/OUTPUT] jack on the rear panel. (Both L and R ch, 33 Ω load) 2) Set the MASTER VOLUME to the maximum position. 3) Press the [START/STOP] button to produce the 1kHz sinusoidal sound. 4) Check the output levels of L and R ch indicated on the Level meter. No problem if the following conditions are satisfied. [PHONES/OUTPUT] (33 Ω load) • R: -18.5 dBu ± 2 dBu • L: -75.0 dBu or less 5) Press the [START/STOP] button to stop 1kHz sinusoidal sound. The LCD screen returns to the test program selection display.
012	**Output level L Check**	Checks whether the stereo L sound is output from the [PHONES/OUTPUT] jack properly. 1) Before pressing the [START/STOP] button, connect the level meter to the [PHONES/OUTPUT] jack on the rear panel. (Both L and R ch, 33 Ω load) 2) Set the MASTER VOLUME to the maximum position. 3) Press the [START/STOP] button to produce the 1kHz sinusoidal sound. 4) Check the output levels of L and R ch indicated on the Level meter. No problem if the following conditions are satisfied. [PHONES/OUTPUT] (33 Ω load) • L: -18.5 dBu ± 2 dBu • R: -75.0 dBu or less 5) Press the [START/STOP] button to stop 1kHz sinusoidal sound. The LCD screen returns to the test program selection display.

No.	Test Program Item	Procedure for "Selection and execution of test items"
019	**MUTE Check**	Confirms that the output MUTE function works properly. 1) Press the [START/STOP] button. **"MUTE Off"** is shown on the LCD and the C5 sound is produced. Press the [+] or [-] button. **"MUTE On"** is shown on the LCD and the sound stops. 2) Press the [START/STOP] button to return to selection display of the test items. If a sound was being produced, the sound stops. * This procedure can be performed to confirm that the MUTE function works properly.
021	**HP Insertion and Extraction Check**	Checks whether the PHONES jack works properly. 1) Press the [START/STOP] button. **"HP In"** is shown on the LCD. 2) Connect headphones to the [PHONES/OUTPUT] jack. **"HP Out"** is shown on the LCD. 3) Remove the headphones from the [PHONES/OUTPUT] jack. If there are no problems, **"HP OK"** is shown on the LCD.
022	**AUX Check**	Checks whether the sound is input to the [AUX IN] jack properly. 1) Check whether **"AUX In"** is shown on the LCD when no plug is plugged into the [AUX-IN] jack. 2) Connect an oscillator to the [AUX IN] jack. **"AUX Out"** is shown on the LCD when an stereo mini plug cable is plugged into the [AUX IN] jack properly. 3) Connect the level meter to the [PHONES/OUTPUT] jack on the rear panel. (Both L and R ch, 33 Ω load) 4) Input the sine wave (-6 dBu, 1 kHz) to the R ch of the [AUX IN] jack. 5) Check the output levels of L and R ch indicated on the Level meter. No problem if the following conditions are satisfied. [PHONES/OUTPUT] (33 Ω load) • R (input side): –4.8 dBu ± 2 dBu • L (nothing side): –70.0 dBu or less 6) For the L ch, make the same operations as in Steps 4 to 5. 7) Unplug the stereo mini cable from the [AUX IN] jack. If no problem is found, **"AUX End"** is shown on the LCD.
024	**Switch Check**	Checks whether each panel button works properly. 1) Check that the LCD shows you the should-be-pressed button. 2) Press the button specified on the LCD one by one. The sound of the note assigned to the pressed button will be produced. (Regarding what note is assigned, refer to the "Switch Test Item List ") * You can exit from this test by pressing the [DEMO] button. * If any problem is found, **"SW NG"** is shown on the LCD. * If two or more buttons are pressed simultaneously, **"Over Two"** is shown on theLCD. If no problem is found, **"SW OK"** is shown on the LCD.
032	**All LCD On Check**	Checks whether all the LCD dots are turned on properly. 1) Check that all the LCD dots are turned on.
033	**All LCD Off Check**	Checks whether all the LCD dots are turned off properly. 1) Check that all the LCD dots are turned off.

No.	Test Program Item	Procedure for "Selection and execution of test items"
035	**Main Volume Check**	Checks the minimum value and maximum value of the [MAIN VOLUME]. 1) Press the [START/STOP] button. **"MVol Min"** is shown on the LCD. 2) Set the [MAIN VOLUME] to the minimum. **"MVol Max"** is shown on the LCD. 3) Set the [MAIN VOLUME] to the maximum. If no problem is found, **"MVol OK"** is shown on the LCD.
036	**Fail-Safe Check**	Checks whether the fail-safe circuit for digital volume control works properly. 1) Check the test result. If no problem is found, **"FS OK"** is displayed. If any problem is found, **"FS NG"** is shown on the LCD.
037	**Pedal1 Check**	Checks whether the Foot switch plugged into the [SUSTAIN] jack works properly. 1) Press the [START/STOP] button to produce the C3 sound. 2) Press the Foot switch to produce the C4 sound. 3) Release the Foot switch to stop the C4 sound. If no problem is found, **"PD1 OK"** is shown on the LCD. * Connect a Foot switch to the [SUSTAIN] jack before turning the power ON.
048	**Volt Check**	Confirms the voltage of the AC adaptor. 1) Check the test result. If no problem is found, **"Volt OK"** is shown on the LCD. If a problem is found, **"Volt NG"** is shown on the LCD.
052	**Pos Check**	Checks the Make Position for the keyboard (PingPongPang mode). 1) Press the [START/STOP] button. **"Press"** is shown on the LCD. 2) Press the key on the keyboard. 3) **"xxx Make 1"** → **"xxx Make 12"** (note number and make number) are shown on the LCD. 0 and +4 notes are output with a velocity of 127 for every 2 Makes. For example, if pressing the C key on the keyboard, CE is output. 4) Press the [START/STOP] button to return to selection display of the test items.
059	**ROM Check2**	Executes the check of the ROM connected to the CPU bus (Full address). 1) Check the test result. (It will take about 50 seconds for the check.) If no problem is found, **"Rom OK"** is shown on the LCD. If any problem is found, **"Rom NG"** is shown on the LCD.
060	**RAM Check2**	Executes the check of the RAM connected to the CPU bus (Full address). 1) Check the test result. If no problem is found, **"Ram OK"** is shown on the LCD. If any problem is found, **"Ram NG"** is shown on the LCD.
061	**Flash ROM Check2**	Executes the check of the flash ROM connected to the CPU bus (Full address). 1) Check the test result. (It will take about 40 seconds for the check.) If no problem is found, **"FRom OK"** is shown on the LCD. If any problem is found, **"FRom NG"** is shown on the LCD.

No.	Test Program Item	Procedure for "Selection and execution of test items"
064	**Keyboard Check**	Checks whether each key works properly. 1) Check that the LCD shows you the should-be-pressed key. 2) Press the key specified on the LCD one by one. The each sound between C3 and B4 assigned to the pressed key will be produced. If no problem is found, **"KB OK"** is shown on the LCD. * You can exit from this test by pressing the [DEMO] button. * If the wrong key is pressed, nothing happens. * If two or more keys are pressed simultaneously, **"Over Two"** is shown on the LCD. * If the velocity of pressing the key is not suitable, either **"Too Slow" or** "**Too Fast"** is shown on the LCD.
065	**Factory Reset**	Reset all the backup region of the memories to the initial factory status. 1) Do not turn off the power while **"Fact --"** is shown on the LCD. After a while, **"Fact End"** is shown on the LCD to indicate that the initializing is completed.
066	**Test Exit**	Lets you exit from the Test mode to the normal mode. 1) Press the [START/STOP] button. The Test Program mode will end, then the instrument will be restarted in normal mode. * Never turn off the power until the Main display appears. Doing so may cause a malfunction.

3. Other Test Items (Check in normal mode)

No.	Test Program Item	Procedure
-	**Popping Noise Level Check**	Check that the popping noise level is proper when turning the power on and off. 1) Connect an Oscilloscope to the [PHONES/OUTPUT] jack. 2) Set the MASTER VOLUME to the maximum position. 3) Press the [⏻] (STANDBY/ON) switch to check the noise level indicated on the Oscilloscope when turning the power of the instrument on and off. No problem if the following conditions are satisfied. [PHONES/OUTPUT] (Both L and R ch, 33 Ω load) • L, R: 1.0 V peak to peak or less
-	**Noise Level Check**	Check that the noise level is proper. 1) Connect the level meter (with JIS-C filter) to the [PHONES/OUTPUT] jack on the rear panel. (Both L and R ch, 33 Ω load) 2) Set the MASTER VOLUME to the maximum position. 3) Check the output levels of L and R ch indicated on the Level meter. No problem if the following conditions are satisfied. [PHONES/OUTPUT] (33 Ω load) • L, R: -75 dBu or less * Do not plug anything into the [AUX IN] jack.

No.	Test Program Item	Procedure
-	**No charging the batteries Check**	Checks whether the voltage is supplied to batteries. 1) Connect the AC adaptor to the [DC IN] jack. 2) Check the voltage between the battery + terminal and GND terminal. No problem if 0.2V or less is generated.
-	**Vibration Noise Check**	Checks whether vibration noise occurs on the instrument. 1) Select the Voice following: No.068 (FngrBass) 2) Set the Main Voice volume in the Function to the default value. 3) Set the MASTER VOLUME to the maximum position. 4) Perform scaling to check that no vibration noise occurs.

4. Switch Test Item List

順番	SW Name	LCD Display	Note Number
1	DEMO	Demo	C3
2	METRONOME	Metro	C#3
3	TEMPO/TAP	Temp/TAP	D3
4	LEFT (PART L)	Left	D#3
5	RIGHT (PART R)	Right	E3
6	STEP LESSON	Keys	F3
7	PHRASE REPEAT	P Rep	F#3
8	LESSON MODE	Lesson	G3
9	VOICE	Voice	G#3
10	SONG	Song	A3
11	STYLE	Style	A#3
12	Tenkey 1	Tenkey 1	B3
13	Tenkey 2	Tenkey 2	C4
14	Tenkey 3	Tenkey 3	C#4
15	Tenkey 4	Tenkey 4	D4
16	Tenkey 5	Tenkey 5	D#4
17	Tenkey 6	Tenkey 6	E4
18	Tenkey 7	Tenkey 7	F4
19	Tenkey 8	Tenkey 8	F#4
20	Tenkey 9	Tenkey 9	G4
21	Tenkey -	Tenkey -	G#4
22	Tenkey 0	Tenkey 0	A4
23	Tenkey +	Tenkey +	A#4
24	MUSIC DATABASE	MDB	B4
25	DUAL ON/OFF	Dual	C3
26	SPLIT ON/OFF	Split	C#3
27	HARMONY ON/OFF	Harmony	D3
28	A-B REPEAT	AB Rep	D#3
29	REW	Rew	E3
30	FF	FF	F3
31	PAUSE	Pause	F#3
32	START/STOP	StartStp	G3
33	REC	Record	G#3
34	PORTABLE GRAND	GP	A3
35	DSP	DSP	A#3
36	ARTICULATION	Art.	B3
37	REGIST MEMORY	Regist	C4
38	FUNCTION	Function	C#4

BACKUP

Backup Parameters

The following Backup parameters will be maintained even if the power is turned off.

Backup parameters

- User Songs
- Style Number 206 to 215
- Registration Memory
- Passing status of song and step
- FUNCTION Settings:

  Tuning, Split Point, Touch Response, Style Volume, Song Volume, Metronome Volume, Your Tempo, Demo Group, Demo Play Mode, Master EQ type, Panel Sustain, Auto Power Off, Battery Type, Guide Sound, Loop Back, Fingering Type, [AUX IN] Audio Input Volume, [USB TO HOST] Audio Input Volume, Style Freeze, Transpose Freeze, Voice Freeze

In addition to the Backup parameters above, all the data (including style data that have not been loaded) transferred from the connected computer will be maintained even if you turn off the power.

INITIALIZATION

There are following two methods to initialize the customer's setup data.

Backup Clear

This operation initializes the backup parameters and the Registration Memories.

While holding down the highest white key, press the [⏻] (Standby/On) switch to turn the power on.

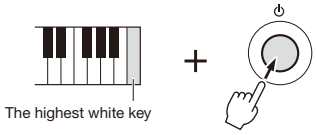

Flash Clear

This operation deletes all the songs and styles that have been transferred from a computer. Note that Style data registered to Style No. 206 to 215 will be maintained. While simultaneously holding the highest white key and the three highest black keys, press the [⏻] (Standby/On) switch to turn the power on.

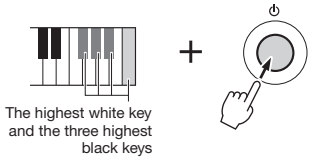

⚠ CAUTION	▪ **Keep in mind that "Flash Clear" also deletes the data the customer has purchased. Be sure to save the important data to a computer via Musicsoft Downloader software, or tell this to the customer in advance.**

■ SYSTEM BOOTING FLOW CHART

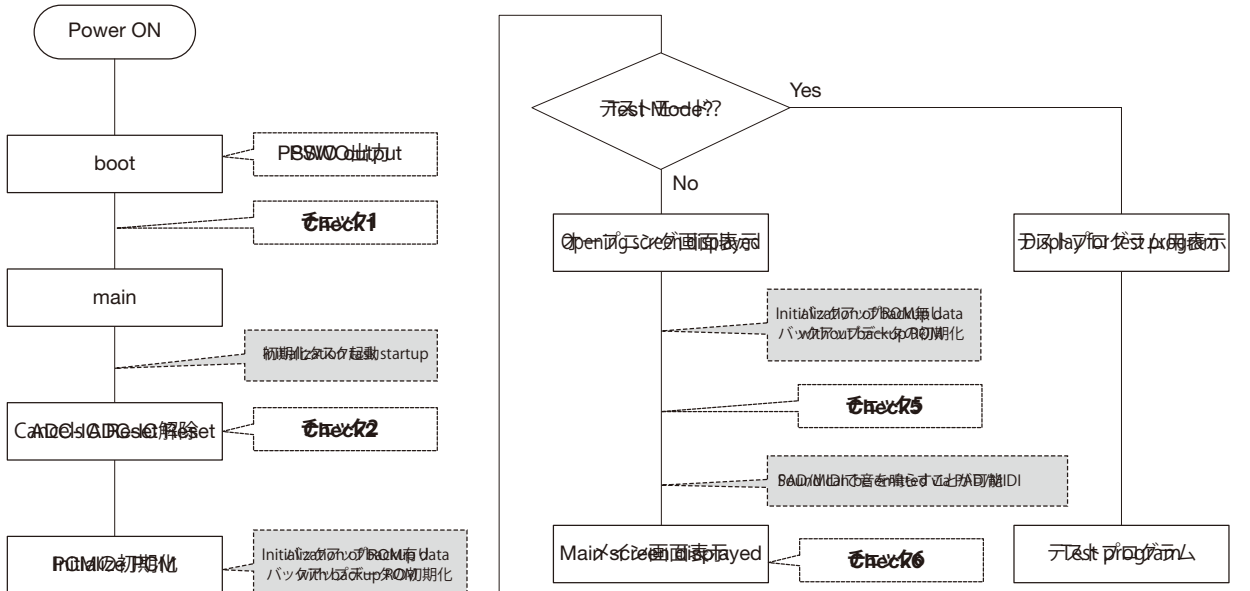

	PSR-E373/YPT-370
CPU	IC001
Program ROM	IC111
Backup ROM	IC111
SDRAM	IC132

チェックポイント

概要view	表示あり、モデル display PSR-E373 / YPT-370
PSWO出力	157pin (GP_OUT0_PSWO) LL→HH
Check1	電源を押し、できるとき、ライトが切れたLCDはDotumかなく、一電源チェック後、基板交換
Check2	159pin (MAT3) LL→HH
Check3	153Pin (GP_INOUT12) LL→HLHL・・・ 149Pin (GP_INOUT8) LL→HLHL・・・ *See 1参照
Check4	Boot は通るだけで動作しない場合、ProgRom/SDRAMは問題なし。 Problem with ProgRom/SDRAM. PSWO出力 Data Flash の不具合。
Check5	Flash に入れた場合、起動の不良
Check6	押鍵すれば発音するが、画面が表示しない場合、LCDにまたはLCD周辺結線の不具合

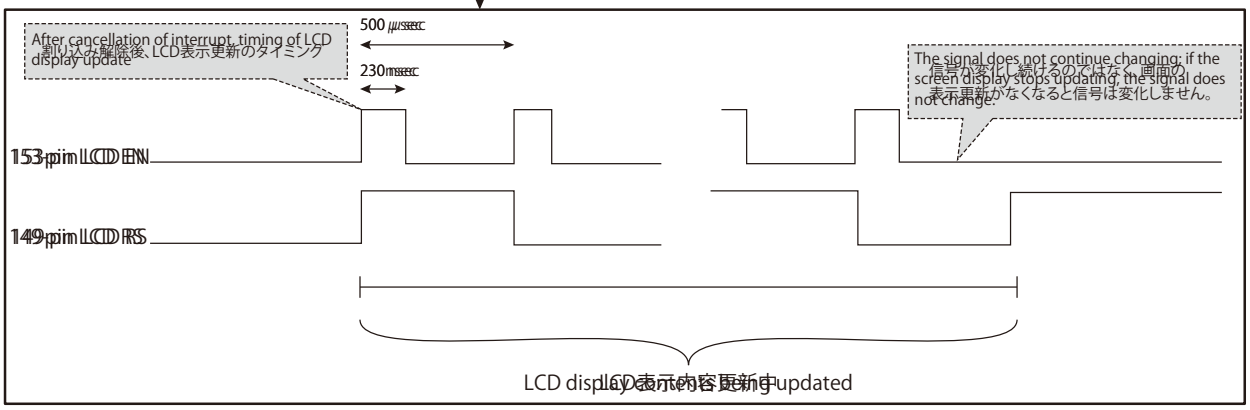

Fig.1

PSR-E373/YPT-370

PARTS LIST

■ CONTENTS

OVERALL ASSEMBLY..... 2
UPPER CASE ASSEMBLY..... 4
LOWER KEY BED ASSEMBLY..... 6
KEYBOARD ASSEMBLY..... 8
ELECTORICAL PARTS..... 10

* DESTINATION ABBREVIATIONS

A:	Australian model	R:	Russia model
B:	British model	S:	Spain model
C:	Canadian model	T:	Taiwan model
D:	German model	U:	U.S.A. model
E:	European model	V:	General export model (110V)
F:	French model	W:	General export model (220V)
H:	North European model	N,X:	General export model
I:	Indonesian model	Y:	Export model
J:	Japanese model	K:	Korean model
M:	South African model	P:	Brazilian model
O:	Chinese model	Z:	India model
Q:	South-east Asia model		

■ WARNING

Components having special characteristics are marked ⚠ and must be replaced with parts having specifications equal to those originally installed.

- The numbers “QTY” show quantities for each unit.
- The parts with “--” in “PART NO.” are not available as spare parts.
- This mark “ } ” in the REMARKS column means these parts are interchangeable.
- The second letter of the shaded ( ) part number is O, not zero.
- The second letter of the shaded ( ) part number is I, not one.

■ OVERALL ASSEMBLY

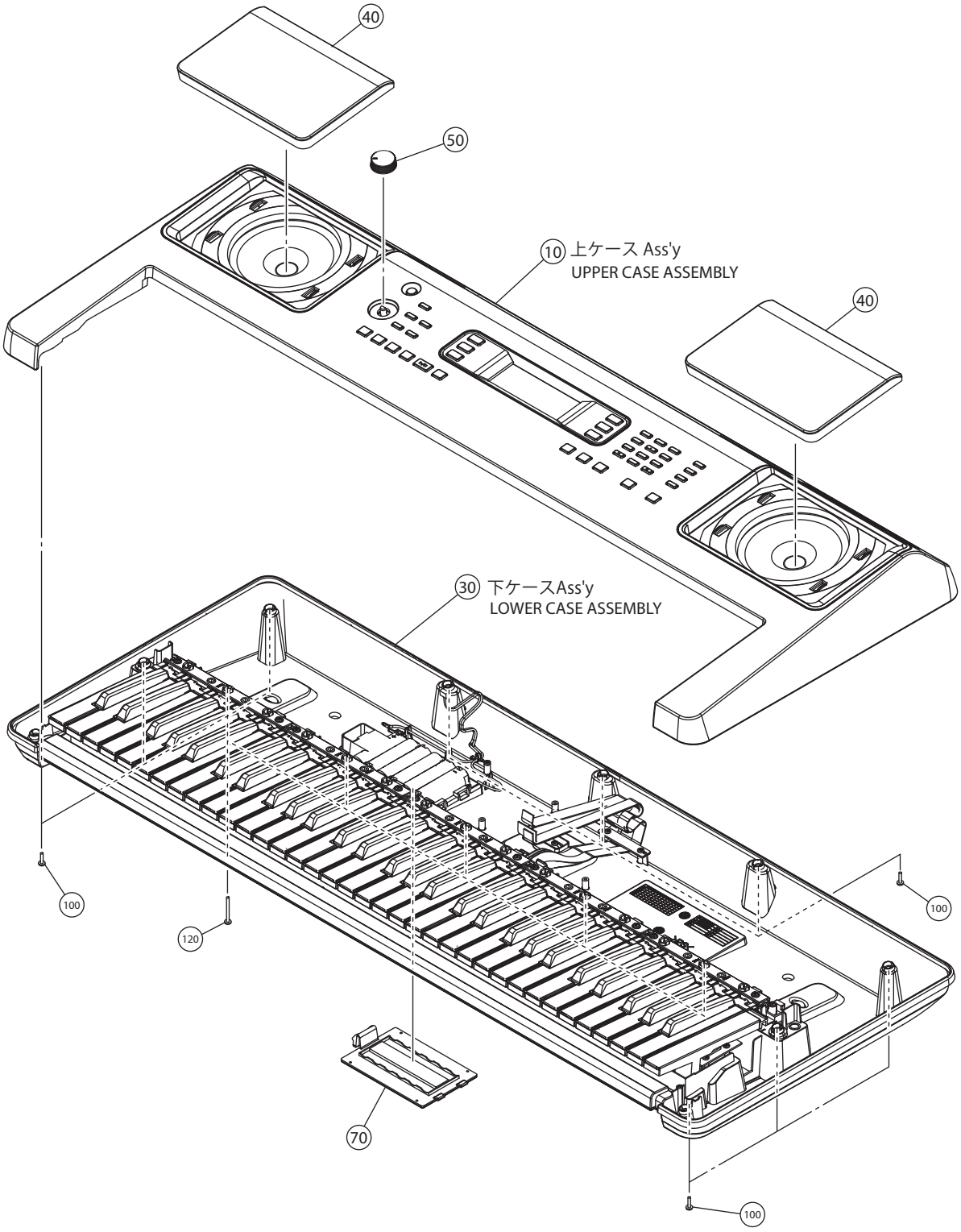

REF NO.	PART NO.	DESCRIPTION		部品名	REMARKS	QTY
	--	MODEL	PSR-E373	モデル	PSR-E373 (VCF9360)	
10	--	OVERALL ASSEMBLY	PK E	総組立	U,C,E,B,I,K,Y,A,P,Z (VDH1150)	
10	--	OVERALL ASSEMBLY	PK J	総組立	J (VDH1180)	
10	--	OVERALL ASSEMBLY	PK CHN	総組立	O (VDH1170)	
10	--	UPPER CASE ASSEMBLY	PK E	上ケースAss'y	U,C,E,B,I,K,Y,A,P,Z (VDH1580)	
10	--	UPPER CASE ASSEMBLY	PK CHN	上ケースAss'y	O (VDH1590)	
10	--	UPPER CASE ASSEMBLY	PK J	上ケースAss'y	J (VDH1600)	
30	--	LOWER CASE ASSEMBLY		下ケースAss'y	(VDH1610)	
40	**ZW042900**	SP GRILLE WELDED	PK	SPグリル溶着品		2
50	**ZP527600**	VOLUME KNOB	COMMON	ボリュームツマミ		
70	**WR080100**	BATTERY COVER ASSEMBLY		電池蓋Ass'y		
100	**WE98740R**	BIND HEAD TAPPING SCREW	3.0X12 MFZN2W3	Bタイト+BIND		9
120	**WF491002**	SCREW TP #B +BIND	3.0X30 MFZN2W3	Bタイト+BIND		5
		ACCESSORIES		付属品		
	ZG441300	MUSIC REST WITH BAG	BLACK	譜面板袋入り		
⚠	**ZM585200**	ADAPTOR SET	PA-130B E	アダプターセットTY	E	
⚠	**ZM585500**	ADAPTOR SET	PA-130B B	アダプターセットTY	B	
⚠	**WK014600**	AC ADAPTOR	PA-130U U	ACアダプター	U,C	
⚠	**ZN406200**	ADAPTOR SET	PA-130B A	アダプターセットTY	A	
⚠	**ZU896800**	ADAPTOR SET	PA-130B IN	アダプターセットTY	Z	
⚠	**ZM585700**	ADAPTOR SET	PA-130B BRA	アダプターセットTY	P	
⚠	**ZM585600**	ADAPTOR SET	PA-130B K	アダプターセットTY	K	
⚠	**V8028600**	AC ADAPTOR	PA-3C J	ACアダプター	J	
⚠	**ZM585900**	ADAPTOR SET	PA-130B CHN	アダプターセットTY	O	
⚠	**V802880R**	AC ADAPTOR	PA-3C E	ACアダプター	I	

REF NO.	PART NO.	DESCRIPTION		部品名	REMARKS	QTY
	--	MODEL	YPT-370	モデル	YPT-370 (VCF9370)	
10	--	OVERALL ASSEMBLY	PK E	総組立	E,B,U,A,Y,Z,P,I (VDH2740)	
10	--	OVERALL ASSEMBLY	PK R	総組立	R (VDH2750)	
10	--	OVERALL ASSEMBLY	PK CHN	総組立	O (VDH2760)	
10	--	UPPER CASE ASSEMBLY	PK E	上ケースAss'y	U,E,B,I,Y,A,P,Z (VDH2800)	
10	--	UPPER CASE ASSEMBLY	PK R	上ケースAss'y	R (VDH2810)	
10	--	UPPER CASE ASSEMBLY	PK CHN	上ケースAss'y	O (VDH2820)	
30	--	LOWER CASE ASSEMBLY		下ケースAss'y	(VDH2830)	
40	**ZW043000**	SP GRILLE WELDED	PK	SPグリル溶着品		2
50	**ZP527600**	VOLUME KNOB	COMMON	ボリュームツマミ		
* 70	**VDK11800**	BATTERY COVER ASSEMBLY		電池蓋Ass'y		
100	**WE98740R**	BIND HEAD TAPPING SCREW-B	3.0X12 MFZN2W3	Bタイト+BIND		9
120	**WF491002**	BIND HEAD TAPPING SCREW-B	3.0X30 MFZN2W3	Bタイト+BIND		5
		ACCESSORIES		付属品		
	ZG441600	MUSIC REST WITH BAG	LIGHT GRAY	譜面板袋入り		
⚠	**ZM585200**	ADAPTOR SET	PA-130B E	アダプターセットTY	E,R	
⚠	**ZM585500**	ADAPTOR SET	PA-130B B	アダプターセットTY	B	
⚠	**WK014600**	AC ADAPTOR	PA-130U U	ACアダプター	U	
⚠	**ZN406200**	ADAPTOR SET	PA-130B A	アダプターセットTY	A	
⚠	**ZU896800**	ADAPTOR SET	PA-130B IN	アダプターセットTY	Z	
⚠	**ZM585700**	ADAPTOR SET	PA-130B BRA	アダプターセットTY	P	
⚠	**ZM585900**	ADAPTOR SET	PA-130B CHN	アダプターセットTY	O	
⚠	**V802880R**	AC ADAPTOR	PA-3C E	ACアダプター	I	

＊: New Parts（新規部品）

■ UPPER CASE ASSEMBLY

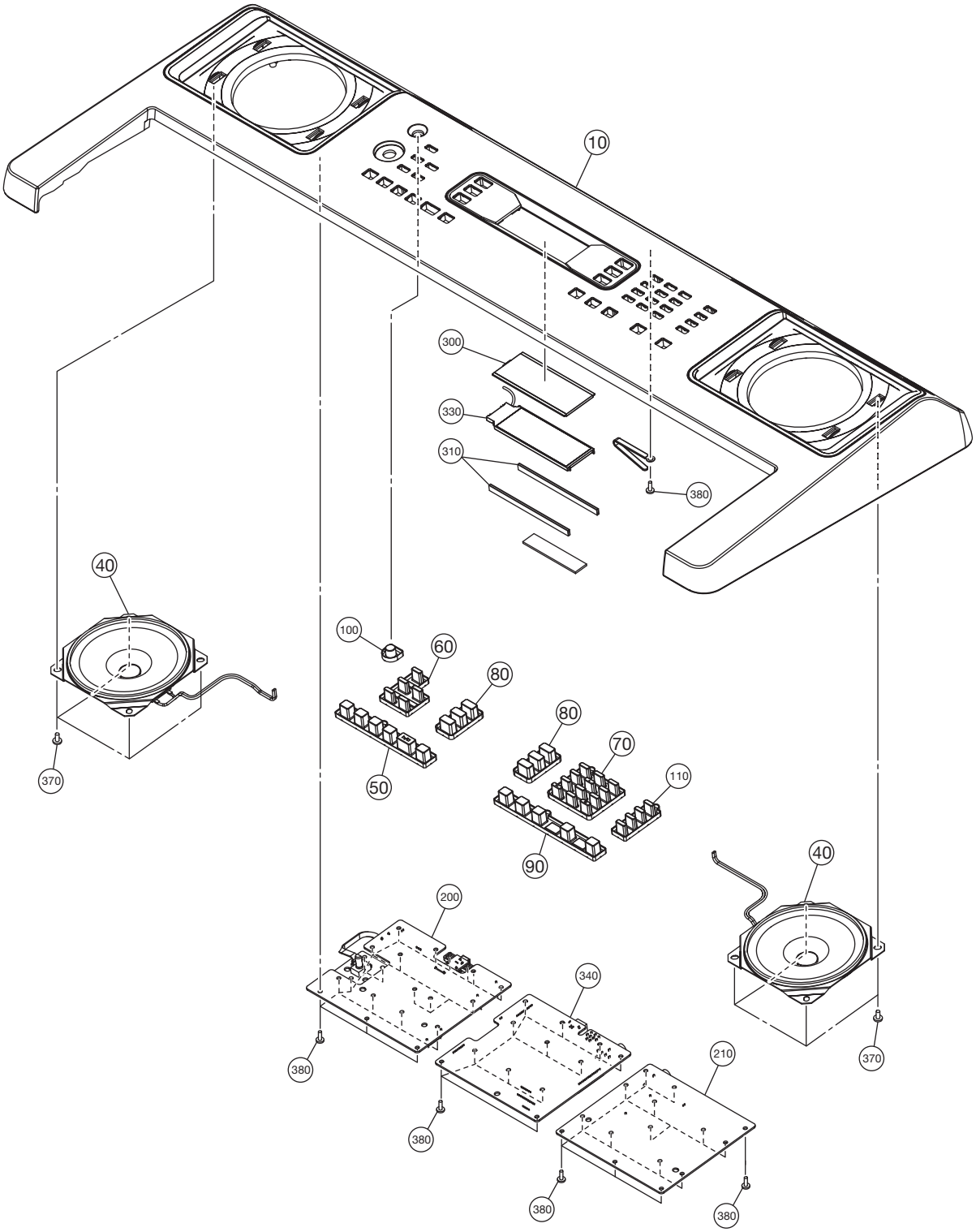

	REF NO.	PART NO.	DESCRIPTION		部品名	REMARKS	QTY
			UPPER CASE ASSEMBLY		上ケースAss'y	PSR-E373/YPT-370	
		--	UPPER CASE ASSEMBLY	E	上ケースAss'y	PSR-E373 U,C,E,B,I,K,Y,A,PZ (VDH1580)	
		--	UPPER CASE ASSEMBLY	CHN	上ケースAss'y	PSR-E373 O (VDH1590)	
		--	UPPER CASE ASSEMBLY	J	上ケースAss'y	PSR-E373 J (VDH1600)	
		--	UPPER CASE ASSEMBLY	E	上ケースAss'y	YPT-370 U,E,B,I,Y,A,PZ (VDH2800)	
		--	UPPER CASE ASSEMBLY	R	上ケースAss'y	YPT-370 R (VDH2810)	
		--	UPPER CASE ASSEMBLY	CHN	上ケースAss'y	YPT-370 O (VDH2820)	
*	10	**VDE29700**	UPPER CASE FINISHED	E	上ケース塗装印刷品	PSR-E373 U,C,E,B,I,K,Y,A,P,Z	
*	10	**VDE29800**	UPPER CASE FINISHED	CHN	上ケース塗装印刷品	PSR-E373 O	
*	10	**VDE29900**	UPPER CASE FINISHED	J	上ケース塗装印刷品	PSR-E373 J	
*	10	**VDE30000**	UPPER CASE FINISHED	E	上ケース塗装印刷品	YPT-370 U,E,B,I,Y,A,P,Z	
*	10	**VDE30100**	UPPER CASE FINISHED	R	上ケース塗装印刷品	YPT-370 R	
*	10	**VDE30200**	UPPER CASE FINISHED	CHN	上ケース塗装印刷品	YPT-370 O	
	40	**YJ207B00**	LOUD SPEAKER	12.0cm 6ohm 3w	スピーカ		2
	50	**ZW018400**	PN SWITCH		PNスイッチ		
	60	**ZW018500**	PN SWITCH		PNスイッチ		
	70	**ZW018600**	PN SWITCH		PNスイッチ		
	80	**ZW018700**	PN SWITCH		PNスイッチ		2
	90	**ZW019500**	PN SWITCH		PNスイッチ		
	100	**ZW019600**	PN SWITCH		PNスイッチ		
	110	**ZW019700**	PN SWITCH		PNスイッチ		
	200	**ZV856400**	CIRCUIT BOARD	PNL	PCB PNL		
	210	**ZV856500**	CIRCUIT BOARD	PNR	PCB PNR		
*	300	**VDE34900**	LCD DISPLAY	YDDC0128ABHDTZS	液晶ディスプレイ		
	310	**WZ963200**	RUBBER CONNECTOR	ZEBRA	ゴムコネクター		2
*	330	**VDE10600**	BACK LIGHT	PK	バックライト		
*	340	**VCX50800**	CIRCUIT BOARD DMLCD		PCB DMLCD		
	370	**WE97460R**	BIND HEAD TAPPING SCREW-B	4.0X8 MFZN2W3	Bタイト+BIND		8
	380	**WE774302**	BIND HEAD B-TIGHT SCREW	3.0X8 MFZN2W3	Bタイト+BIND		49

＊: New Parts（新規部品）

■ LOWER KEY BED ASSEMBLY

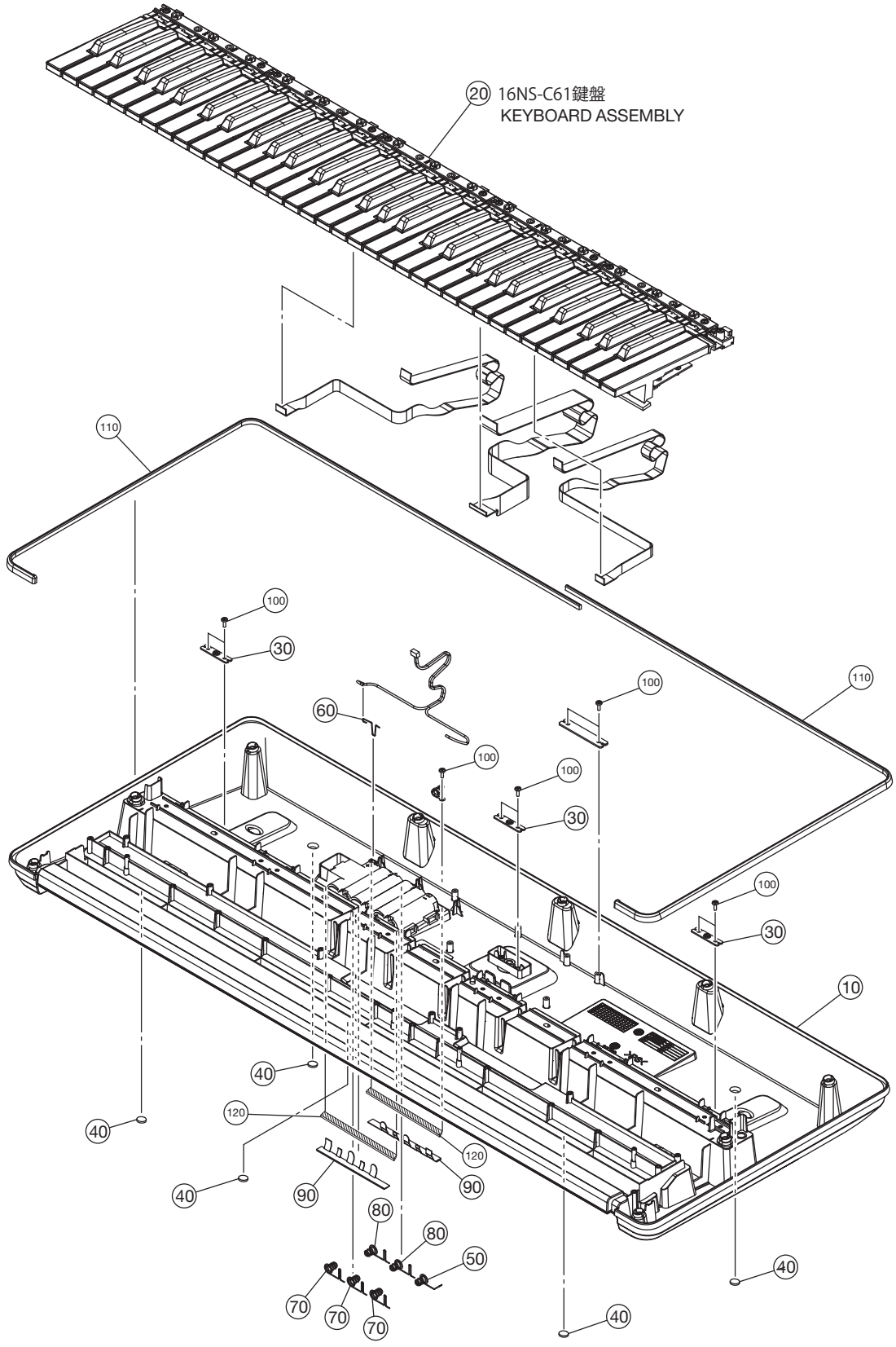

	REF NO.	PART NO.	DESCRIPTION		部品名	REMARKS	QTY
			LOWER CASE ASSEMBLY		下ケース Ａｓｓ'ｙ	PSR-E373/YPT-370	
		--	LOWER CASE ASSEMBLY		下ケースＡｓｓ'ｙ	PSR-E373 (VDH1610)	
		--	LOWER CASE ASSEMBLY		下ケースＡｓｓ'ｙ	YPT-370 (VDH2830)	
*	10	**VDD29900**	LOWER CASE MOLDING	BLACK	下ケース成形品	PSR-E373	
*	10	**VDD30000**	LOWER CASE MOLDING	LIGHT GRAY	下ケース成形品	YPT-370	
	20	--	16NS-C61 KEYBOARD	16N C61 P2M I	１６ＮＳ－Ｃ６１鍵盤	(ZW64810)	
	20	--	16NS-C61 KEYBOARD	16N C61 P2M I	１６ＮＳ－Ｃ６１鍵盤	(ZW64811)	
	30	--	STAND ANGLE		スタンド金具	(ZP42530)	3
	40	**WW693500**	RUBBER FOOT		ゴム脚		5
	50	**WD87920R**	SPRING TERMINAL A		接点バネ A		
	60	**WD87930R**	SPRING TERMINAL B		接点バネ B		
	70	**WD87940R**	SPRING TERMINAL C		接点バネ C		3
	80	**WD87970R**	SPRING TERMINAL D		接点バネ D		2
*	90	**ZR125000**	NONWOVEN CLOTH	99X20X0.5T	不織布		2
	100	**WE774302**	BIND HEAD B-TIGHT SCREW	3.0X8 MFZN2W3	Ｂタイト＋ＢＩＮＤ		9
	110	--	CUSHION (PE)	870X12X1	クッション（ＰＥ）	(ZW08210)	2
	120	--	CUSHION (PE)	98X6X1	クッション（ＰＥ）	(WU97160)	2
	110-120	**VDK61700**	CUSHION SHEET T1 (A4)	t1X297X210 (PEF)	クッションシートｔ１（ペフ）	サイズに合わせて切って使用してください。 Please cut to fit the size.	

＊: New Parts（新規部品）

■ KEYBOARD ASSEMBLY

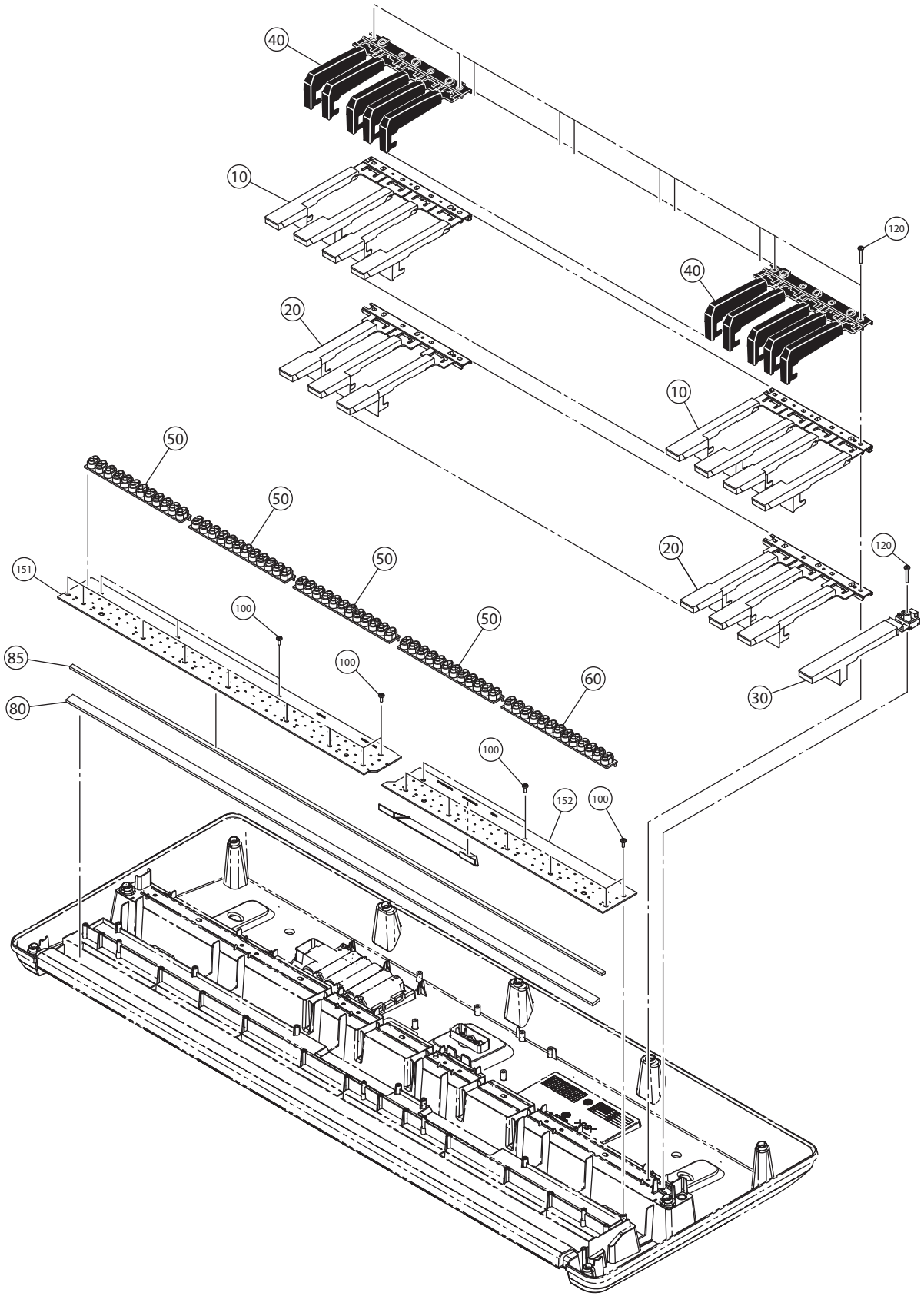

REF NO.	PART NO.	DESCRIPTION		部品名	REMARKS	QTY
		KEYBOARD ASSEMBLY		鍵盤Ａｓｓ'ｙ	PSR-E373/YPT-370	
	--	KEYBOARD ASSEMBLY	16N C61 P2M I	１６ＮＳ－Ｃ６１鍵盤	(ZW64810)	
	--	KEYBOARD ASSEMBLY	16N C61 P2M I	１６ＮＳ－Ｃ６１鍵盤	(ZW64811)	
10	**ZE369800**	WHITE KEY CEGB	16NS CEGB	白鍵ＣＥＧＢ		5
20	**ZE369900**	WHITE KEY DFA	16NS DFA	白鍵ＤＦＡ		5
30	**V476030R**	WHITE KEY C		白鍵Ｃ		
40	**WZ168300**	BLACK KEY T=1.5	16NS #	黒鍵		5
50	**V341360R**	KEYBOARD RUBBER CONTACT	16N-2M OCT 2M	接点ゴム１６Ｎ２Ｍ		4
50	**ZS089000**	KEYBOARD RUBBER CONTACT	16N-2M OCT 2M	接点ゴム１６Ｎ２Ｍ		4
60	**V747740R**	KEYBOARD RUBBER CONTACT	16N-2M 13K 2M	接点ゴム１６Ｎ２Ｍ		
60	**ZS089100**	KEYBOARD RUBBER CONTACT	16N-2M 13 2M	接点ゴム１６Ｎ２Ｍ		
80	**VZ303020**	FELT L 11x827 WHITE	827 11 SHIRO	フェルトＬ		
85	**VZ302901**	FELT U	836 5 SHIRO	フェルトＵ		
100	**WE774302**	BIND HEAD B-TIGHT SCREW	3.0X8 MFZN2W3	Ｂタイト＋ＢＩＮＤ		20
120	**WF49200R**	BIND HEAD TAPPING SCREW-P	3.0X20 MFZN2W3	Ｐタイト＋ＢＩＮＤ		11
151	**V869530R**	CIRCUIT BOARD 61L-MK 16N2M		ＰＣＢ ＭＫ－Ｌ		
152	**V869550R**	CIRCUIT BOARD 61H-MK 16N2M		ＰＣＢ ＭＫ－Ｈ		

＊: New Parts（新規部品）

■ ELECTORICAL PARTS

DMLCD/PNL/PNR/MK-L/MK-H

	REF NO.	PART NO.	DESCRIPTION		部品名	REMARKS	QTY
			ELECTRICAL PARTS		電気部品		
*		**VCX50800**	CIRCUIT BOARD	DMLCD	PCB DMLCD	(VCX5040)(YK716D0)	
		ZV856400	CIRCUIT BOARD	PNL	PCB PNL	(ZV85630)(YJ069C0)	
		ZV856500	CIRCUIT BOARD	PNR	PCB PNR	(ZV85630)(YJ069C0)	
		V869530R	CIRCUIT BOARD 61L-MK 16N2M		PCB MK-L	(V869520)(X2336C0)	
		V869550R	CIRCUIT BOARD 61H-MK 16N2M		PCB MK-H	(V869540)(X2335D0)	
*		**VCX50800**	CIRCUIT BOARD	DMLCD	PCB DMLCD	(VCX5040)(YK716D0)	
	CN401	**V680260R**	CONNECTOR	USB 4P SE	USBジャック		
	JK201	**LB10187R**	CONNECTOR	JACK YKB21-5006	ホーンコネクタ		
	JK201	**WJ306201**	CONNECTOR	MSJ-064-15A B AG	ホーンコネクタ		
	JK701	**ZA590001**	CONNECTOR	JACK MINI STEREO	ホーンコネクタ		
		ZV856400	CIRCUIT BOARD	PNL	PCB PNL	(ZV85630)(YJ069C0)	
		ZV856500	CIRCUIT BOARD	PNR	PCB PNR	(ZV85630)(YJ069C0)	
⚠	D103	**WV008801**	DIODE	2A02-A0 TE- 52	ダイオード		
⚠	D103	**ZQ176200**	DIODE	RL202 TE- 26	ダイオード		
⚠	FZ101	**WN081300**	FUSE	SEMKO/UL/PSE 2.00A	ヒューズ250V		
⚠	JK101	**ZU054000**	CONNECTOR	JACK KB0271A03DK2	電源コネクタ		
	JK201	**VC68750R**	CONNECTOR	JACK YKB21-5014	ホーンコネクタ（黒）		
	VR301	**VQ67050R**	ROTARY POT. B10K	B 10K RK11K1130A0M	ロータリーボリューム		
	VR301	**ZK790601**	ROTARY VR	B 10.0K XV012113YN	ロータリーボリューム		
	D104	**VB941201**	DIODE	1SS133,1SS176 TE-5	ダイオード		
	D104	**VD631601**	DIODE	1SS133,176,HSS104	ダイオード		
	D105	**VB941201**	DIODE	1SS133,1SS176 TE-5	ダイオード		
	D105	**VD631601**	DIODE	1SS133,176,HSS104	ダイオード		
		V869530R	CIRCUIT BOARD 61L-MK 16N2M		PCB MK-L	(V869520)(X2336C0)	
	D001	**VB941201**	DIODE	1SS133,1SS176 TE-5	ダイオード		
	-72	**VB941201**	DIODE	1SS133,1SS176 TE-5	ダイオード		
		V869550R	CIRCUIT BOARD 61H-MK 16N2M		PCB MK-H	(V869540)(X2335D0)	
	D073	**VB941201**	DIODE	1SS133,1SS176 TE-5	ダイオード		
	-122	**VB941201**	DIODE	1SS133,1SS176 TE-5	ダイオード		

＊: New Parts（新規部品）

■ PSR-E373/YDP-370 OVERALL CIRCUIT DIAGRAM (DMLCD, PNR, PNL, MVR, DC-IN, 61H-MK, 61L-MK)

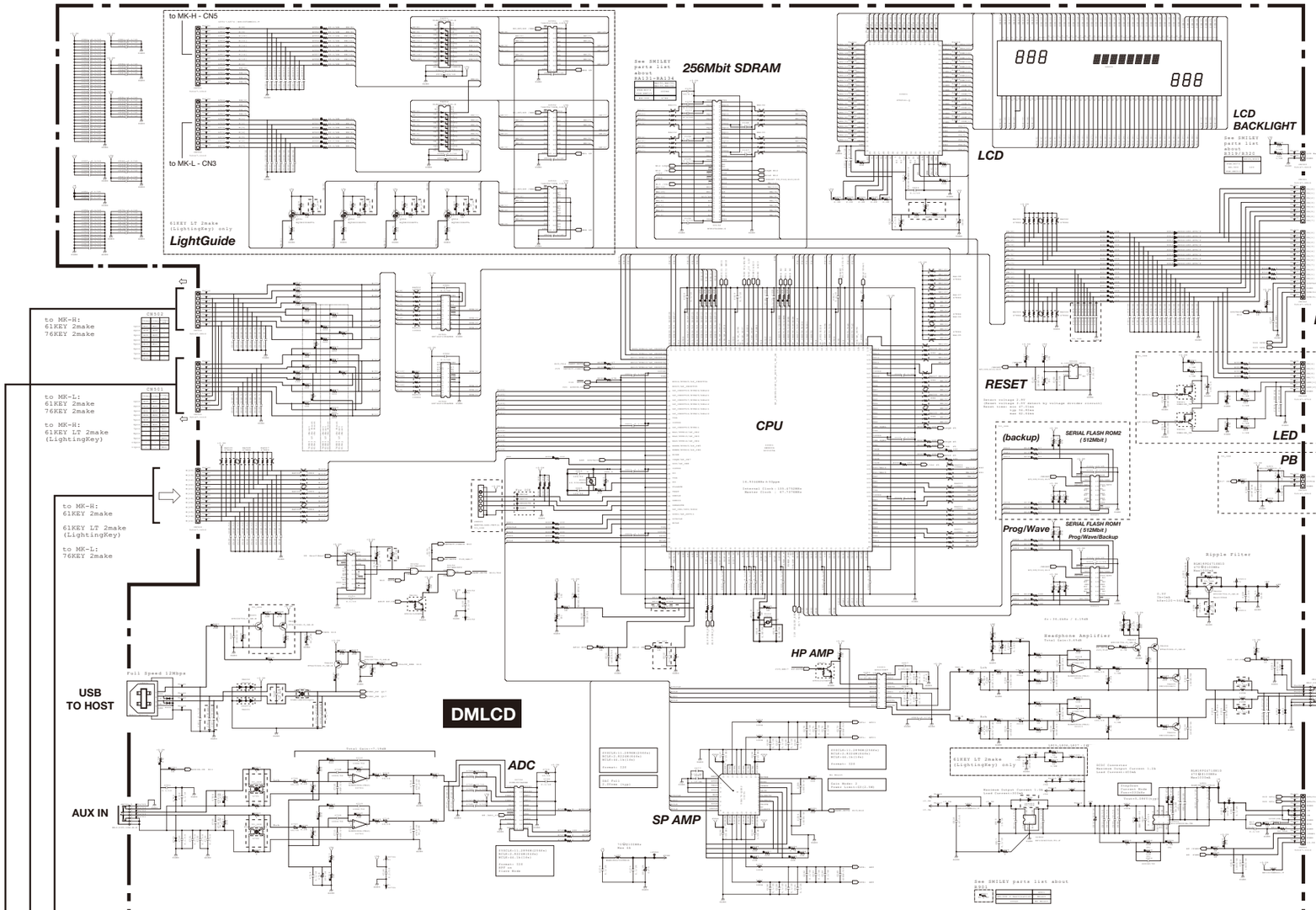

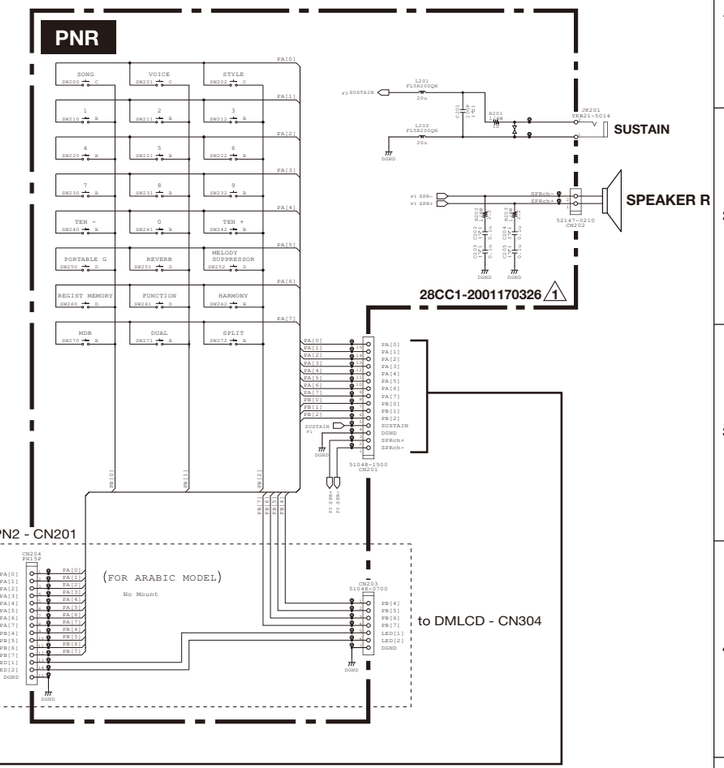

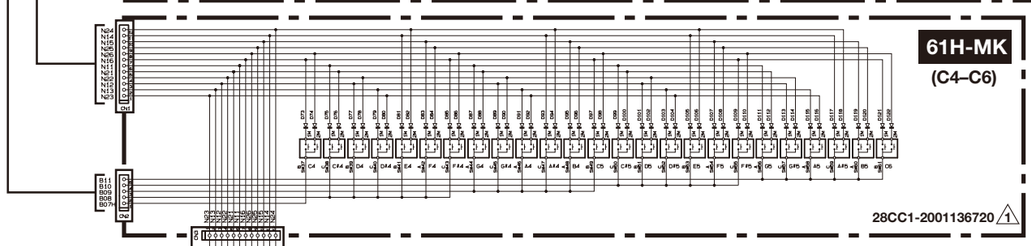

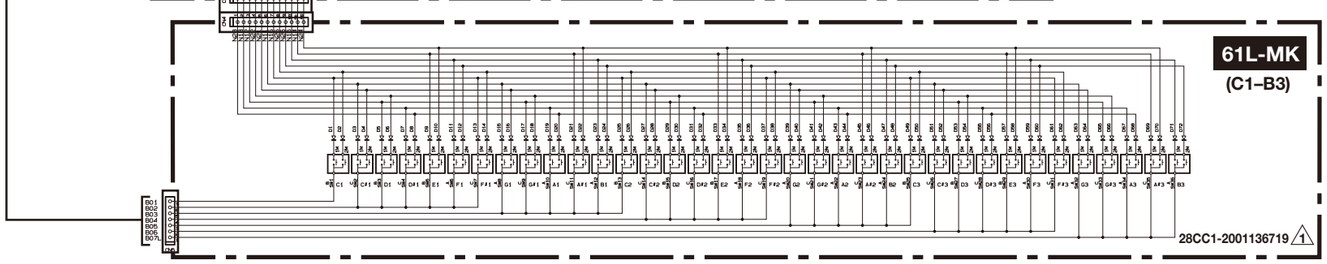

■ **WARNING**
Components having special characteristics are marked ⚠ and must be replaced with parts having specification equal to those originally installed.

■ 安全上の注意
⚠印の部品は、安全を維持するために重要な部品です。
交換する場合は、安全のため必ず指定の部品をご使用ください。

XX : Not installed（未実装）

[ ] : The parts which are surrounded by dotted line are No mount.（未実装）

Note : See parts list for details of circuit board component parts.

注：シート部品詳細は、パーツリストをご参照ください。

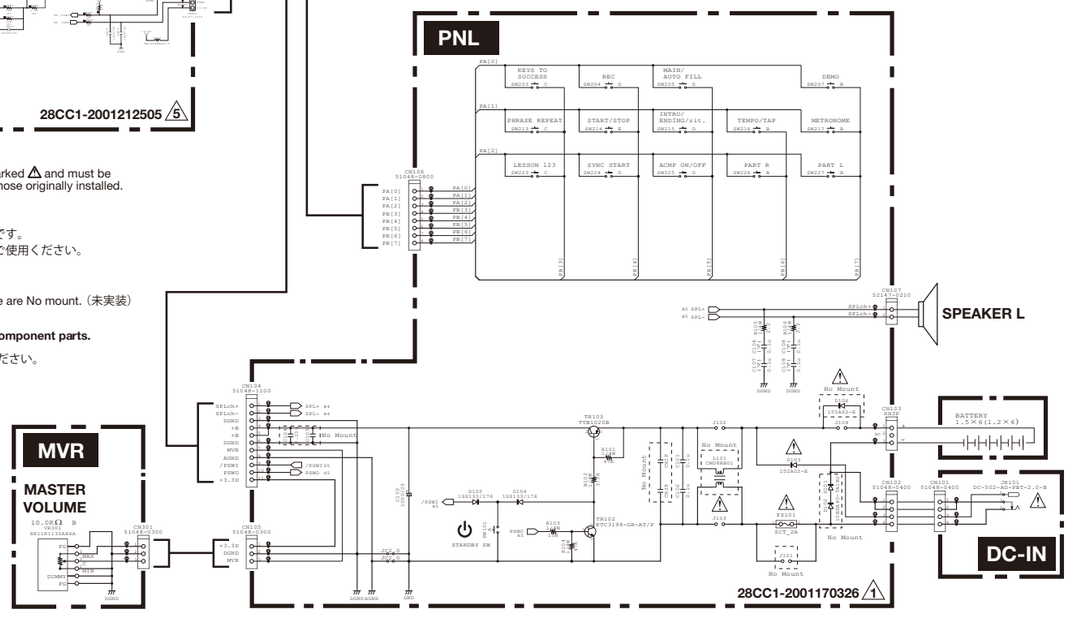

PSR-E373/YDP-370