PSR-A350

SERVICE MANUAL



PSR-A350

■ CONTENTS

SPECIFICATIONS..... 3
PANEL LAYOUT..... 4
CIRCUIT BOARD LAYOUT & WIRING..... 6
BLOCK DIAGRAM..... 7
DISASSEMBLY PROCEDURE..... 8
CIRCUIT BOARDS..... 16
OVER-VOLTAGE DETECTION..... 21
DMLCD Circuit Board Test Method..... 22
TEST PROGRAM..... 23
BACKUP..... 31
INITIALIZATION..... 32
PARTS LIST
OVERALL CIRCUIT DIAGRAM

PK 001934

YAMAHA
HAMAMATSU, JAPAN

© 2016 Yamaha Corporation.

IMPORTANT NOTICE

This manual has been provided for the use of authorized Yamaha Retailers and their service personnel. It has been assumed that basic service procedures inherent to the industry, and more specifically Yamaha Products, are already known and understood by the users, and have therefore not been restated.

WARNING : Failure to follow appropriate service and safety procedures when servicing this product may result in personal injury, destruction of expensive components and failure of the product to perform as specified. For these reasons, we advise all Yamaha product owners that all service required should be performed by an authorized Yamaha Retailer or the appointed service representative.

IMPORTANT : This presentation or sale of this manual to any individual or firm does not constitute authorization certification, recognition of any applicable technical capabilities, or establish a principal-agent relationship of any form.

The data provided is believed to be accurate and applicable to the unit(s) indicated on the cover. The research engineering, and service departments of Yamaha are continually striving to improve Yamaha products. Modifications are, therefore, inevitable and changes in specification are subject to change without notice or obligation to retrofit. Should any discrepancy appear to exist, please contact the distributor's Service Division.

WARNING : Static discharges can destroy expensive components. Discharge any static electricity your body may have accumulated by grounding yourself to the ground bus in the unit (heavy gauge black wires connect to this bus.)

IMPORTANT : Turn the unit OFF during disassembly and parts replacement. Recheck all work before you apply power to the unit.

WARNING: This product contains chemicals known to the State of California to cause cancer, or birth defects or other reproductive harm.

DO NOT PLACE SOLDER, ELECTRICAL/ELECTRONIC OR PLASTIC COMPONENTS IN YOUR MOUTH FOR ANY REASON WHAT SO EVER!

Avoid prolonged, unprotected contact between solder and your skin! When soldering, do not inhale solder fumes or expose eyes to solder/flux vapor!

If you come in contact with solder or components located inside the enclosure of this product, wash your hands before handling food.

WARNING

Components having special characteristics are marked ⚠ and must be replaced with parts having specification equal to those originally installed.

SAVING DATA



Be sure to perform it

Saving and backing up your data

Some data items are automatically saved as backup data in the internal memory even if you turn the power off. Saved data may be lost due to malfunction or incorrect operation. Save important data to external device such as a computer.

SPECIFICATIONS

Size/Weight	Dimensions (W x D x H)		945mm x 369mm x 122mm (37-3/16" x 14-1/2" x 4-13/16")
	Weight		4.6Kg (10lbs., 2oz.) (not including batteries)
Control Interface	Keyboard	Number of Keys	61
		Touch Response	On (Hard/Medium/Soft) / Off
	Other Controllers	Pitch Bend Wheel	Yes
	Display	Type	LCD (Liquid Crystal Display)
		Backlight	Yes
		Language	English
Voices	Tone Generation	Tone Generation Technology	AWM Stereo Sampling
	Polyphony		32 (max.)
	Preset	Number of Voices	221 Voices + 33 Drum/SFX kits + 20 Arpeggio + 339 XGlite Voices (including 45 Oriental Voices + 19 Oriental Percussion)
	Compatibility		GM, XGlite
Effects	Types	Reverb	9 types
		Chorus	5 types
		Master EQ	6 types
		Ultra-Wide Stereo	3 types
		Harmony	26 types
		Arpeggio	152 types
	Functions	Dual	Yes
		Split	Yes
		Panel Sustain	Yes
		Melody Suppressor	Yes (for AUX IN)
Accompaniment Styles	Preset	Number of Styles	210 (including 115 Oriental Styles)
		Fingering	Multi Finger
		Style Control	ACMP ON/OFF, SYNC START, START/STOP, INTRO/ENDING/rit., MAIN/AUTO FILL
	External Styles		Yes
	Other Features	One Touch Setting (OTS)	Yes
	Compatibility		Style File Format (SFF)
Songs (MIDI data only; audio not supported.)	Preset	Number of Preset Songs	50
	Recording	Number of Songs	5
		Number of Tracks	2
		Data Capacity	Approx. 10,000 notes
	Format	Playback	SMF (Format 0, Format 1)
		Recording	Original File Format
Functions	Registration Memory	Number of Buttons	9
		Control	Freeze
	Lesson/Guide		[KEYS TO SUCCESS], [1 LISTENING 2 TIMING 3 WAITING], [PHRASE REPEAT], [A-B REPEAT], [CHORD DICTIONARY]
	Overall Controls	Metronome	Yes
		Tempo Range	11 – 280, Tap Tempo
		Transpose	-12 – 0 – +12
		Tuning	427.0 – 440.0 – 453.0 Hz (approx. 0.2Hz increments)
		Duo	Yes
		Scale Setting	Yes
		Scale Memory	Yes
	Miscellaneous	PIANO Button	Yes (Oriental Instrument/Piano Button)
Storage and Connectivity	Storage	Internal Memory	Total maximum size approx. 1.26 MB
	Connectivity	DC IN	12 V
		Headphones/Output	Standard stereo phone jack (PHONES/OUTPUT)
		Sustain Pedal	Yes
		AUX IN	Stereo mini jack
		USB TO HOST	Yes
Sound System	Amplifiers		2.5 W x 2
	Speakers		12 cm x 2
Power Supply	Power Supply	Adaptor	Users within Europe: PA-130 or an equivalent recommended by Yamaha Others: PA-3C, PA-130 or an equivalent
		Batteries	Six "AA" size alkaline (LR6), manganese (R6) or Ni-MH rechargeable batteries
	Power Consumption		8W (When using PA-130 AC adaptor)
	Auto Power Off		Yes
Included Accessories			• Owner's Manual • AC Adaptor * (PA-130 or an equivalent recommended by Yamaha) • Music rest • Online Member Product Registration * May not be included depending on your particular area. Please check with your Yamaha dealer.
Separately Sold Accessories (May not be available depending on your area.)			• AC Adaptor: Users within Europe: PA-130 or an equivalent recommended by Yamaha Others: PA-3C, PA-130 or an equivalent • Keyboard Stand: L-2C • Headphones: HPH-150/HPH-100/HPH-50 • Footswitch: FC4A/FC5 • Wireless MIDI Adaptor: UD-BT01

■ PANEL LAYOUT

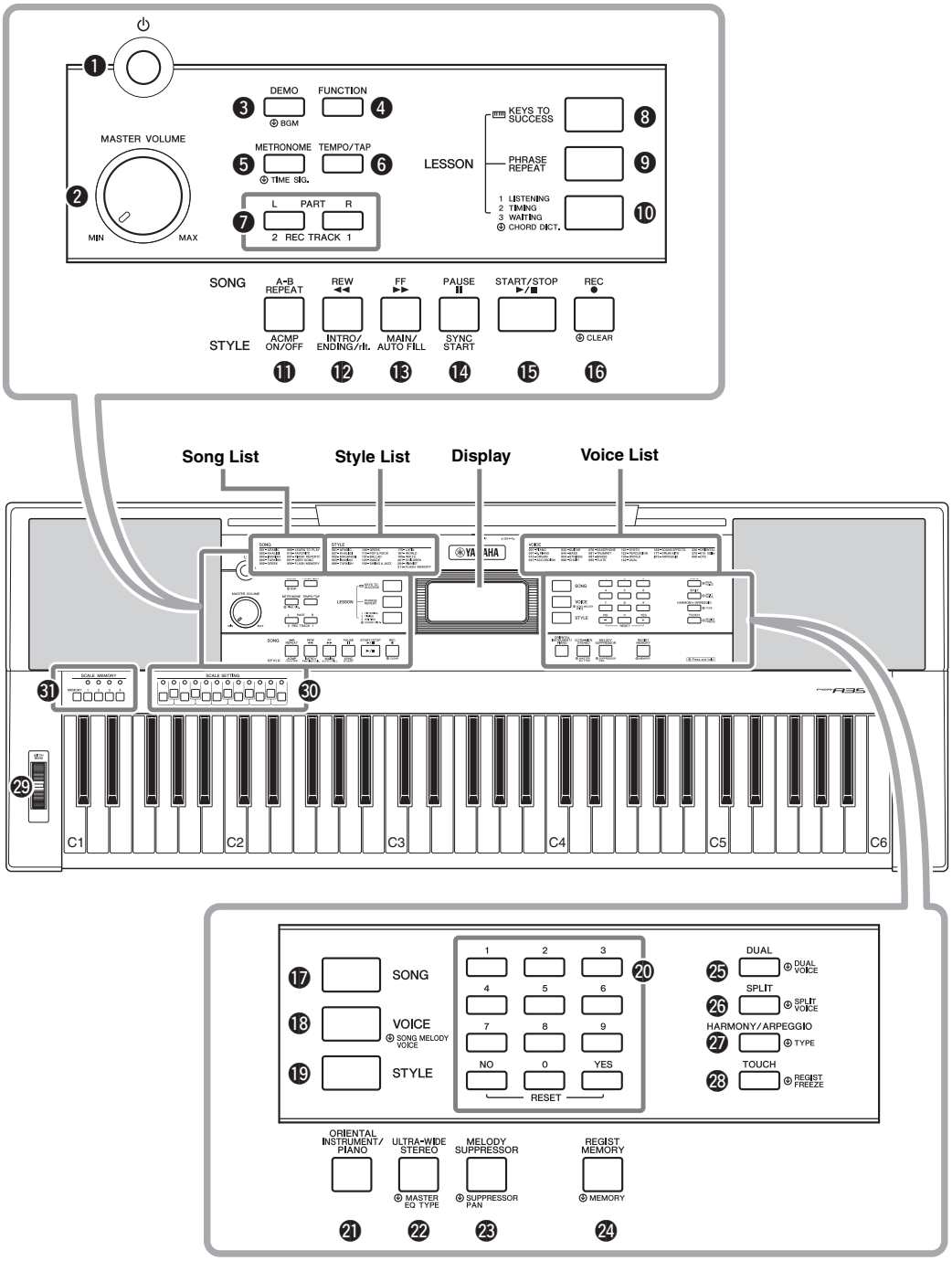

❶ **[⏻] (Standby/On) switch**
❷ **[MASTER VOLUME] dial**
❸ **[DEMO] button**
❹ **[FUNCTION] button**
❺ **[METRONOME] button**
❻ **[TEMPO/TAP] button**

In the Lesson mode

❼ **PART**
[L] button
[R] button

In the Recording mode

❼ **[REC TRACK 2] button**
[REC TRACK 1] button

---

❽ **[KEYS TO SUCCESS] button**
❾ **[PHRASE REPEAT] button**
❿ **[1 LISTENING 2 TIMING 3 WAITING] button**

In the Song mode

⓫ **[A-B REPEAT] button**
⓬ **[REW] button**
⓭ **[FF] button**
⓮ **[PAUSE] button**

In the Style mode

⓫ **[ACMP ON/OFF] button**
⓬ **[INTRO/ENDING/rit.] button**
⓭ **[MAIN/AUTO FILL] button**
⓮ **[SYNC START] button**

⓯ **[START/STOP] button**
⓰ **[REC] button**
⓱ **[SONG] button**
⓲ **[VOICE] button**
⓳ **[STYLE] button**
⓴ **Number buttons [0]–[9], [+], [-]**
㉑ **[ORIENTAL INSTRUMENT/PIANO] button**

㉒ **[ULTRA-WIDE STEREO] button**
㉓ **[MELODY SUPPRESSOR] button**
㉔ **[REGIST MEMORY] button**
㉕ **[DUAL] button**
㉖ **[SPLIT] button**
㉗ **[HARMONY/ARPEGGIO] button**
㉘ **[TOUCH] button**
㉙ **[PITCH BEND] wheel**
㉚ **[SCALE SETTING] buttons**
㉛ **[SCALE MEMORY] buttons**

Rear Panel

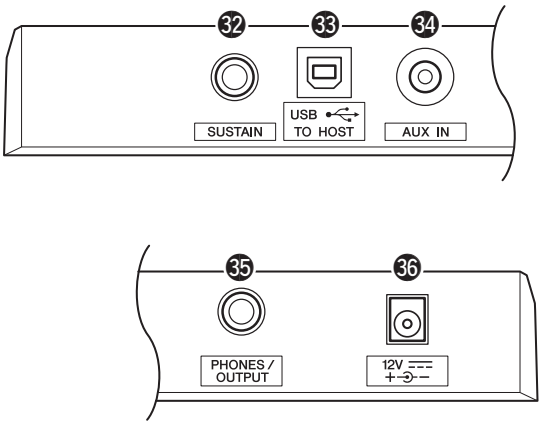

㉜ **[SUSTAIN] jack**
㉝ **[USB TO HOST] terminal**
㉞ **[AUX IN] jack**
㉟ **[PHONES/OUTPUT] jack**
㊱ **DC IN jack**

■ CIRCUIT BOARD LAYOUT & WIRING

● **Upper case assembly**

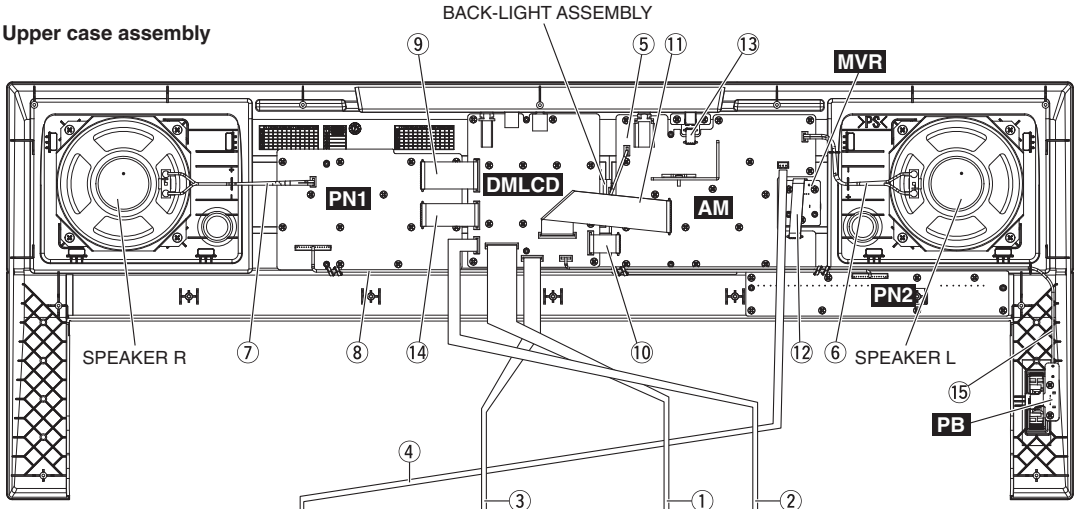

● **Lower key bed assembly**

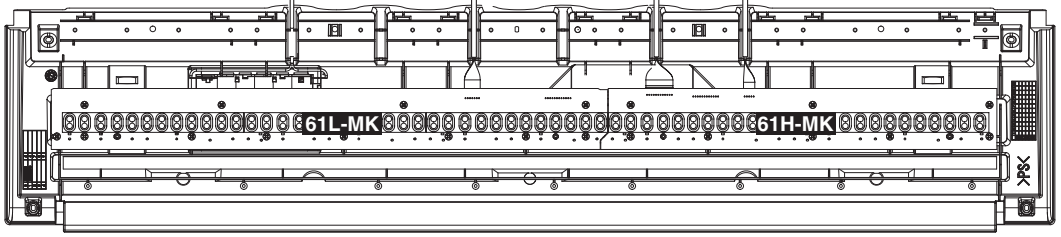

Table Wiring assemblies list

No.	Unit Name	Location	Parts No.	Connector Assembly	Destination						Remarks
①	LOWER KEY BED ASSEMBLY	30	(WE13850)	MK1	61H-MK - CN01	*1	*4	DMLCD - CN102	*1	*4	12P L=220
②		40	(WE13870)	MK2	61H-MK - CN02	*1	*4	DMLCD - CN104	*1	*4	5P L=250
③		50	(WE13880)	MK3	61L-MK - CN05	*1	*4	DMLCD - CN103	*1	*4	7P L=190
④		120	(WQ73930)	BATT	BATTERY TERMINAL (+/-)	*2	*6	AM - CN506	*1	*8	3P L=220
⑤	UPPER CASE ASSEMBLY	350	(WE14140)	BL	BACK-LIGHT ASSEMBLY	*2	*5	AM - CN501	*1	*4	2P L=70
⑥		500	(ZE84940)	SP	SPEAKER L	*2	*7	AM - CN505	*1	*8	2P L=150
⑦		500	(ZE84940)	SP	SPEAKER R			PN1 - CN302	*1	*8	2P L=150
⑧		360	(ZT86060)	PN1 - PN2	PN1 - CN304	*1	*9	PN2 - CN201	*1	*9	15 L=565
⑨	PN1,AM,PB CIRCUIT BOARD	WH010	(ZA18670)		PN1 - CN301	*3	*9	DMLCD - CN106	*1	*4	12P L=100
⑩		WH020	(ZA18020)		AM - CN502	*3	*9	DMLCD - CN109	*1	*4	8P L=75
⑪		WH030	(ZA27740)		AM - CN503	*3	*9	DMLCD - CN108	*1	*4	14P L=175
⑫		WH040	(ZA17550)		AM - CN504	*3	*9	MVR - CN701	*3	*9	5P L=100
⑬		WH050	(ZA17370)		AM - CN507	*3	*9	DC IN - CN508	*3	*9	4P L=50
⑭		WH060	(ZA18350)		PN1 - CN303	*3	*9	DMLCD - CN110	*1	*4	10P L=100
⑮		WH001	(ZE35500)		PB - CN1	*3	*8	DMLCD - CN201	*1	*4	3P L=540

* The parts with "( )" in "Part No." are not available as spare parts.

How to connect

*1: Installation

*2: Manual soldering

*3: Dip soldering

Direction of the connections

*4: Edge mark is adjusted to Pin 1 mark (△mark).

*5: Edge mark is adjusted to + mark.

*6: Red wire is connected to (+) terminal. Black wire is connected to (–) terminal.

*7: Red wire is connected to (+) terminal. White wire is connected to (–) terminal.

*8: Red wire is adjusted to Pin 1 mark (△mark).

*9: Connected

Caution:

- Be sure to attach the removed filament tape just as it was before removal.

BLOCK DIAGRAM

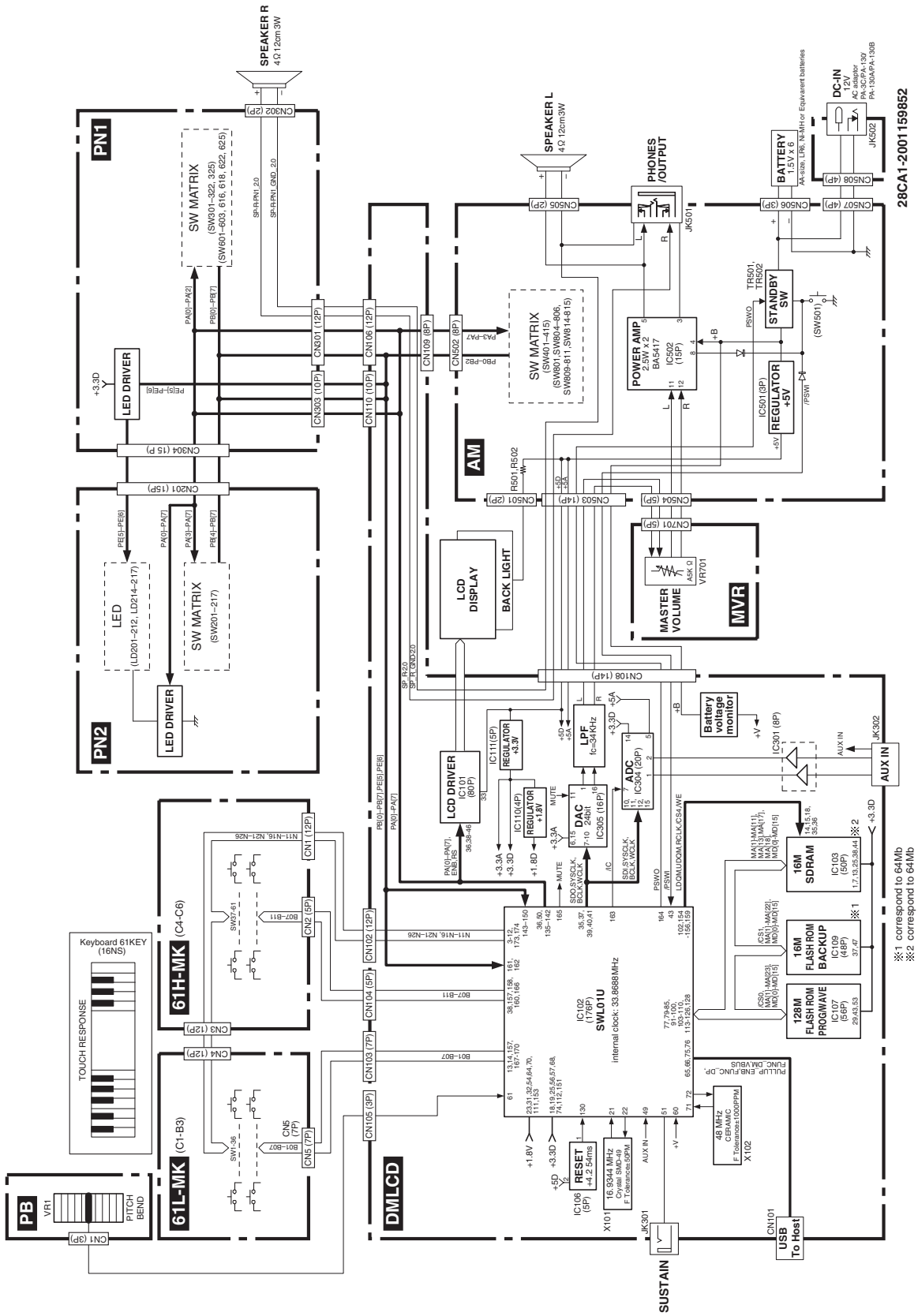

■ DISASSEMBLY PROCEDURE

Caution:

- Be sure to attach the removed filament tape just as it was before removal.

1. Lower Case Assembly (Time required: About 3 minutes)

1. Remove the screw marked [80A], four (4) screws marked [80B] and four (4) screws marked [100]. The lower case assembly can then be removed. (Fig.1)

* ***When installing the lower case assembly, first tighten the screw marked [80A] and then the remaining screws. (Fig.1)***

• Bottom view

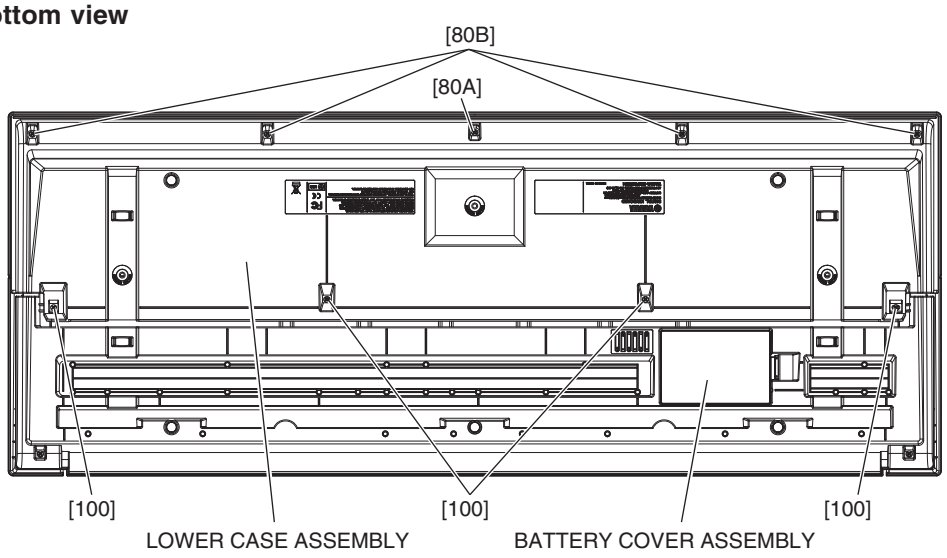

• Top view

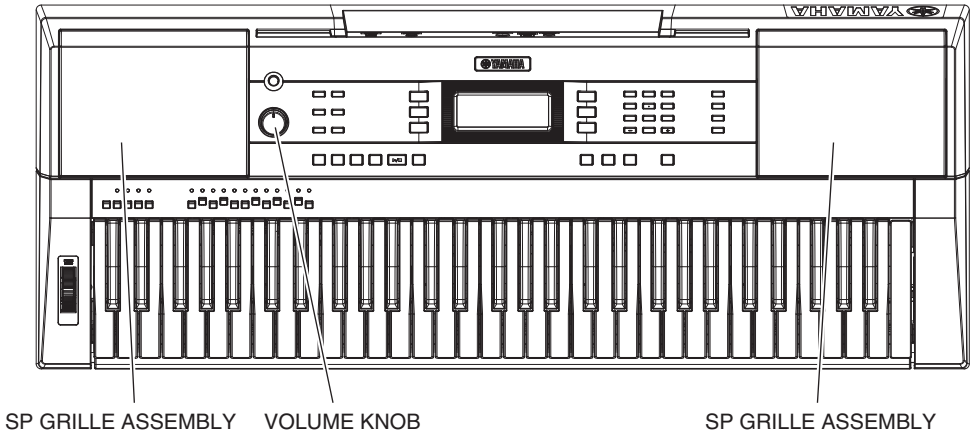

Fig.1

2. DMLCD Circuit Board (Time required: About 6 minutes)

1. Remove the lower case assembly. (See procedure 1.)
2. Remove the twelve (12) screws marked [380A]. The DMLCD circuit board can then be removed. (Fig.2)

* ***When installing the DMLCD circuit board, tighten the screws 1 through 4 in numerical order. (Fig.2)***

* ***After replacing the DMLCD circuit board, make sure to execute the "Factory Set" in the Test program.***

• Bottom view

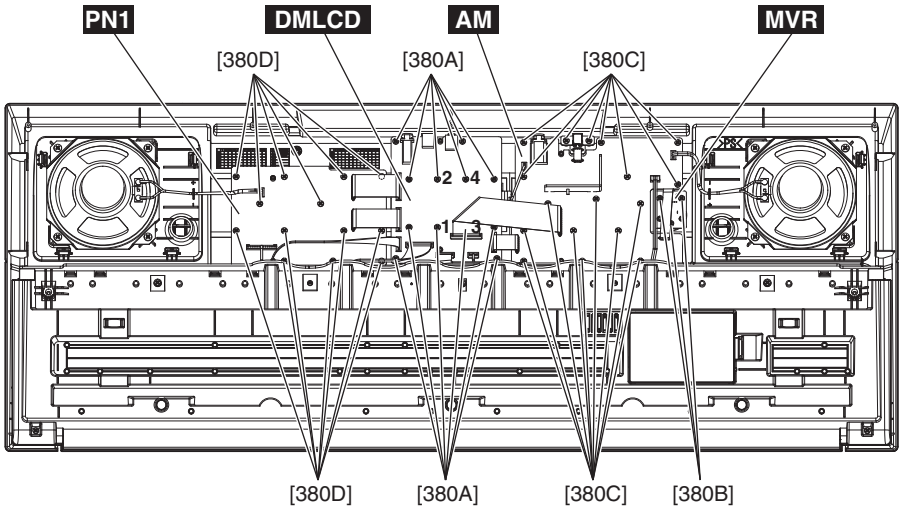

Fig.2

3. LCD (Time required: About 7 minutes)

1. Remove the lower case assembly. (See procedure 1.)
2. Remove the DMLCD circuit board. (See procedure 2.)
3. Remove the Back-light assembly. (Fig.3)
4. Remove the rubber connector. (Fig.3)
5. Remove the LCD. (Fig.3)

* ***Avoid touching the conductive part of the rubber connector as much as possible. Should foreign matter or dirt adhere, remove such contamination using adhesive tape or the like. Do not wipe off using solvents such as benzene or alcohol. (Fig.3)***

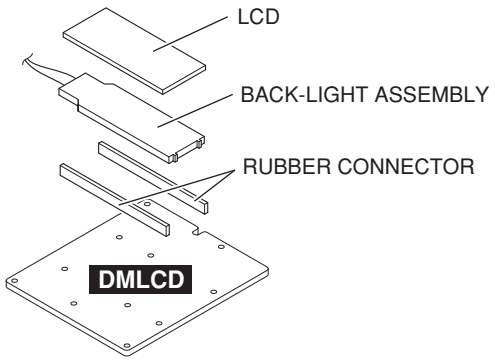

Fig.3

4. PN1 Circuit Board, AM with MVR Circuit Board

1. Remove the lower case assembly. (See procedure 1.)

- AM with MVR Circuit board (Time required: About 8 minutes)
  1. Remove the knob from the control panel surface. (Fig.1、Fig.4)
  2. Remove the three (3) screws marked [380B]. (Fig.2)
  3. Remove the seventeen (17) screws marked [380C]. The AM with MVR circuit board can then be removed. (Fig.2)
- PN1 circuit board (Time required: About 6 minutes)
  1. Remove the thirteen (13) screws marked [380D]. The PN1 circuit board can then be removed. (Fig.2)

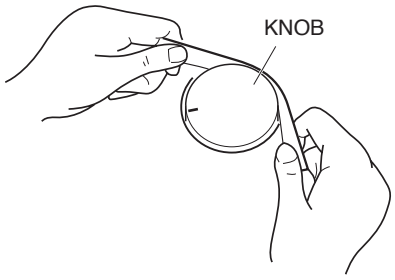

Fig.4

5. Speaker (Time required: About 4 minutes each)

1. Remove the lower case assembly. (See procedure 1.)
2. Remove the four (4) screws marked [370]. The speaker can then be removed. (Fig.5)

* ***The right and left speakers can be removed in the same manner.***

• Bottom view

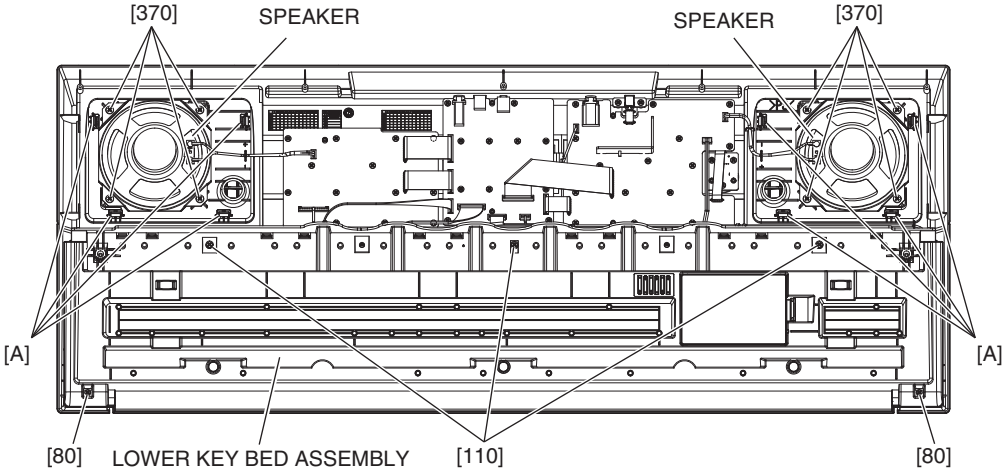

Fig.5

6. SP Grille (Time required: About 4 minutes each)

1. Remove the lower case assembly. (See procedure 1.)
2. Release the four (4) claws marked [A] of the SP grille and remove the SP grille. (Fig.1, Fig.5)

* ***The right and left SP grilles can be removed in the same manner.***

* ***SP grilles can be changed without removing the lower case assembly.***

Tear the saran net. Release the four (4) claws marked [A] of the SP grille by pushing them with the slotted screwdriver to inward. Remove the SP grille. (Fig.6)

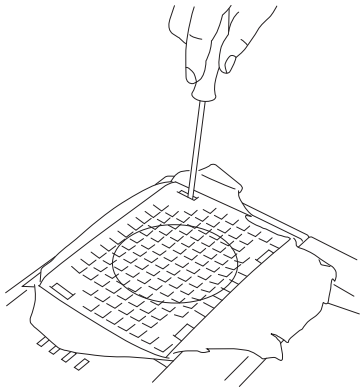

Fig.6

7. Lower Key Bed Assembly (Time required: About 5 minutes)

1. Remove the lower case assembly. (See procedure 1.)
2. Remove the two (2) screws marked [80] and three (3) screws marked [110]. The lower key bed assembly can then be removed. (Fig.5)

8. PN2 Circuit Board (Time required: About 7 minutes)

1. Remove the lower case assembly. (See procedure 1)
2. Remove the two (2) screws marked [80] and three (3) screws marked [110]. The lower key bed assembly can then be removed. (Fig.5)
3. Remove the eight (8) screws marked [380E]. The PN2 circuit board can then be removed. (Fig.7)

9. PB Circuit Board (Time required: About 6 minutes)

1. Remove the lower case assembly. (See procedure 7)
2. Remove the two (2) screws marked [380F]. Then,while sliding outward the wheel assembly connected to the PB circuit board, pull the PB circuit board upward. (Fig.7)

* ***The wheel assembly is not part of the PB circuit board. When replacing the PB circuit board, remove the wheel assembly and install it to the new circuit board.***

- **Bottom view**

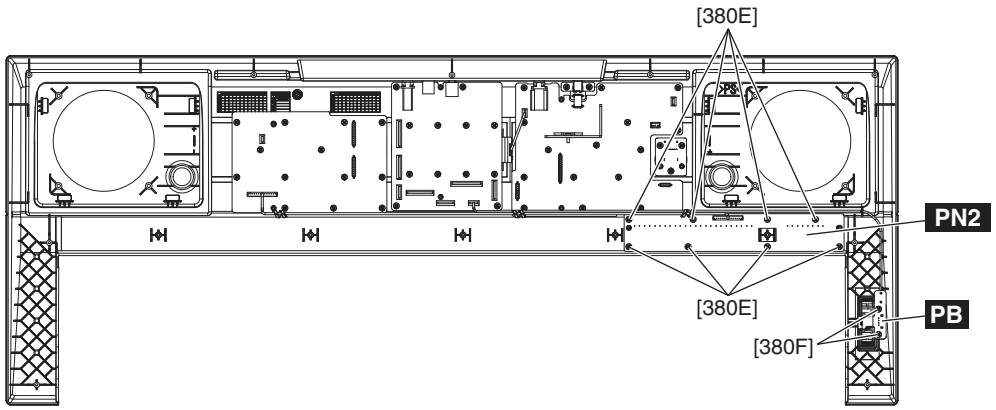

Fig.7

10. Disassembling Keyboard Assembly (Time required: About 13 minutes)

1. Remove the lower case assembly. (See procedure 1.)
2. Remove the lower key bed assembly. (See procedure 7.)

- White Keys and Black Keys

1. White and black keys for one octave unit are integrated as a set. There are five sets in total. Only the C6 white key, unlike the other keys, is not integrated in a set. (Fig.8)
2. To remove a set, remove the two (2) each screws marked [120A]. The white and black keys in the set can then be removed. (Fig.8)
   When removing, unfasten the two (2) hooks at the back of the black keys upward, and lift the white and black keys while pulling them toward you a little. (Photo.1)
3. To remove the white key C6, remove the screw marked [120B], unhook as described in previous procedure, and pull out toward you. (Fig.8)

* ***When all white and black keys were removed, first attach the white and black keys C3 ~ B3 aligning them with the boss, and then attach the remaining white and black keys. (Fig.8)***

- Rubber Contact

1. Remove the white and black keys corresponding to the rubber contacts to be removed. (See Fig.8 and procedure 10. "White Keys and Black Keys")
2. Remove the rubber contacts. (Photo.2, Fig.9)

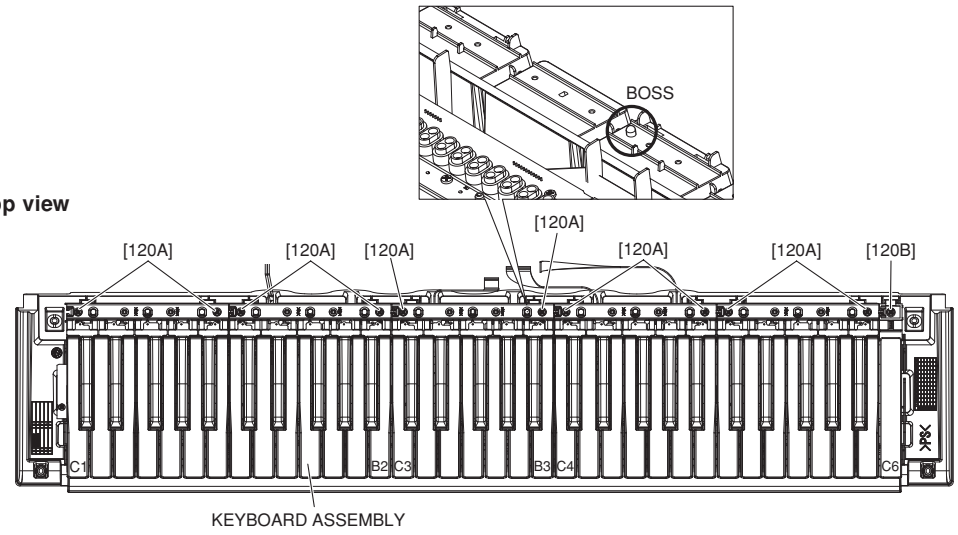

Fig.8

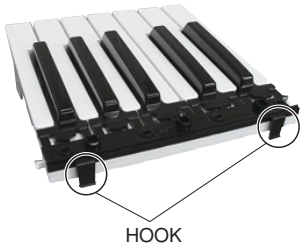

Photo.1



Photo.2

- Circuit Board 61L-MK
  1. Remove the white and black keys from C1 to B3. (See Fig.8 and procedure 10. "White Keys and Black Keys")
  2. Remove the four (4) screws marked [100C] and eight (8) screws marked [110A]. The circuit board 61L-MK can then be removed. (Fig.9)

* ***When installing the circuit board 61L-MK, tighten the screws 1 through 12 in numerical order as shown in the figure "61L-MK" in Fig.10.***

- Circuit Board 61H-MK
  1. Remove the white and black keys from C4 to C6. (See Fig.8 and procedure 10. "White Keys and Black Keys")
  2. Remove the three (3) screws marked [100D] and five (5) screws marked [110B]. The circuit board 61H-MK can then be removed. (Fig.9)

* ***When installing the circuit board 61H-MK, tighten the screws 1 through 8 in numerical order as shown in the figure "61H-MK" in Fig.10.***

● Top view

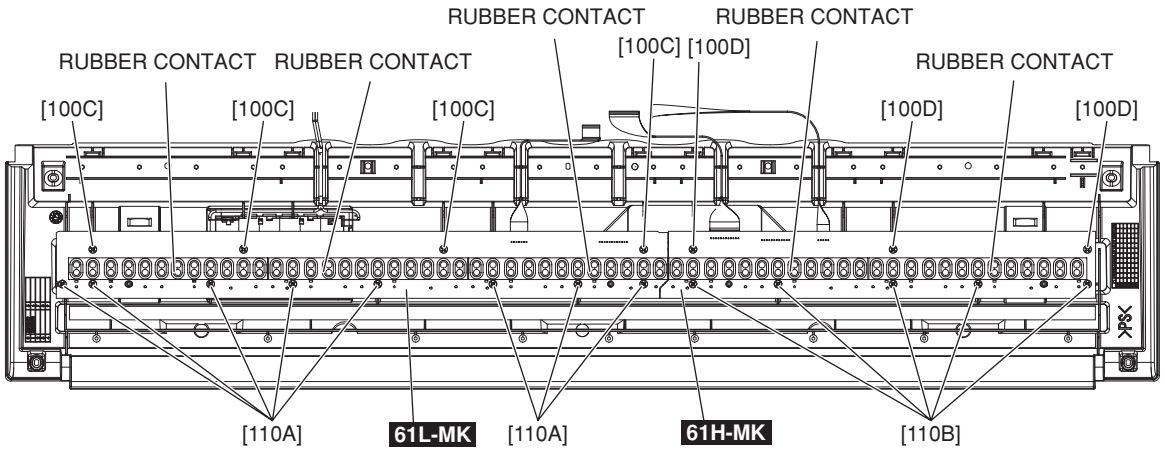

Fig.9

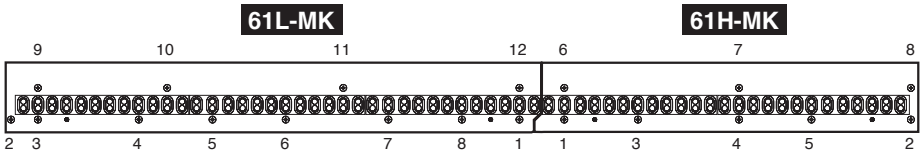

Fig.10

11. How to Remove Spring Terminals

- Spring Terminal A and Spring Terminal B (Time required: About 8 minutes)
  1. Remove the lower case assembly. (See procedure 1.)
  2. Remove the lower key bed assembly. (See procedure 7.)
  3. Remove the white and black keys from C1 to B2. (See Fig.8 and procedure 10. "White Keys and Black Keys")
  4. Remove the BATT connector assembly soldered to the spring terminal A and spring terminal B. (Photo.3)
  5. Turn the lower key bed assembly upside down and remove the battery cover assembly. (Fig.1)
  6. Lift the spring terminal A a little and slide it in the upper right direction to remove it. (Fig.11)
  7. Remove the hook for the spring terminal B to pull it out from inside. (Fig.11)
- Spring Terminal C and Spring Terminal D (Time required: About 1 minute each)
  1. Remove the battery cover assembly. (See procedure 11. "Spring Terminal A and Spring Terminal B")
  2. Remove the hooks to pull out the spring terminal C and spring terminal D. (Fig.11, Fig.12)

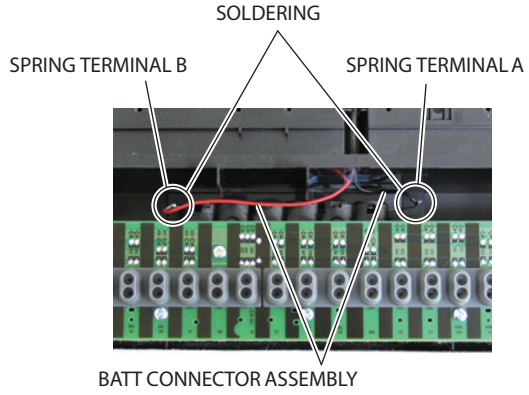

Photo.3

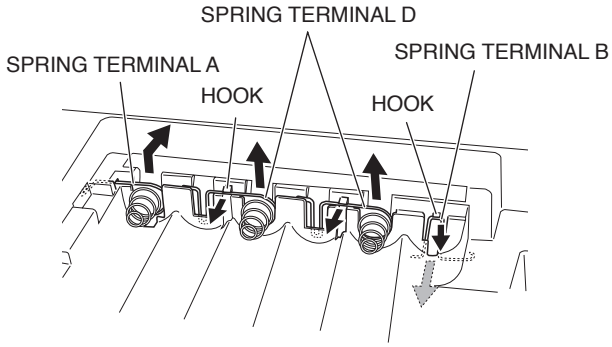

Fig.11

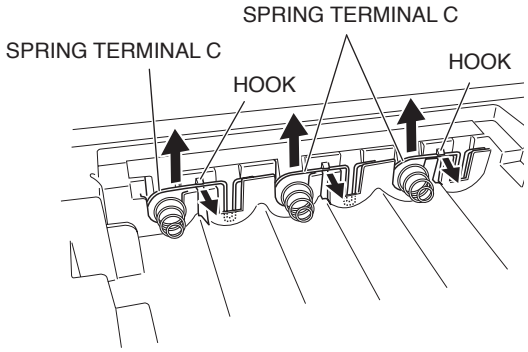

Fig.12

■ CIRCUIT BOARDS

CONTENTS

AM with MVR Circuit Board (YH564C0)..... 17
PB Circuit Board (X5067A0) 17
DMLCD Circuit Board (YE820C0)..... 18
PN1 Circuit Board (YH564C0)..... 19
PN2 Circuit Board (YH565B0) 19
61H-MK Circuit Board (X2335D0)..... 20
61L-MK Circuit Board (X2336C0)..... 20

Note:

- See parts list for details of circuit board component parts.

● AM with MVR Circuit Board (YH564C0)

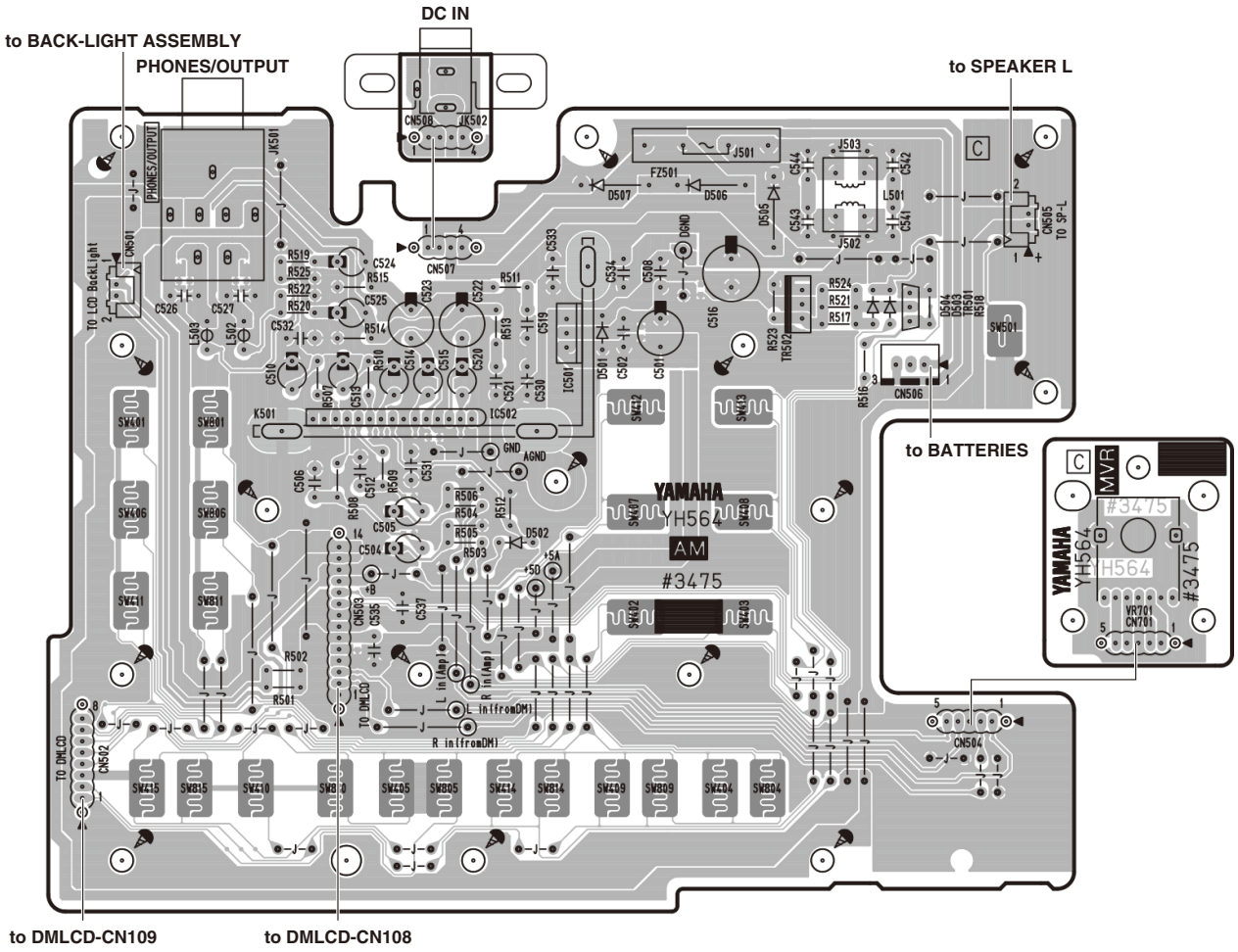

Component Side
2NA-ZT17820

● PB Circuit Board (X5067A0)

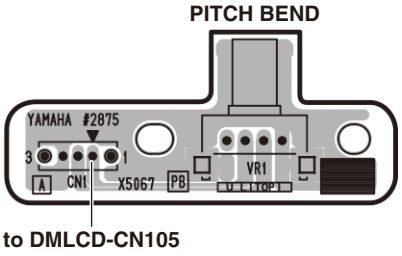

Component Side
2NA-WC36570 ⚠1

● DMLCD Circuit Board (YE820C0)

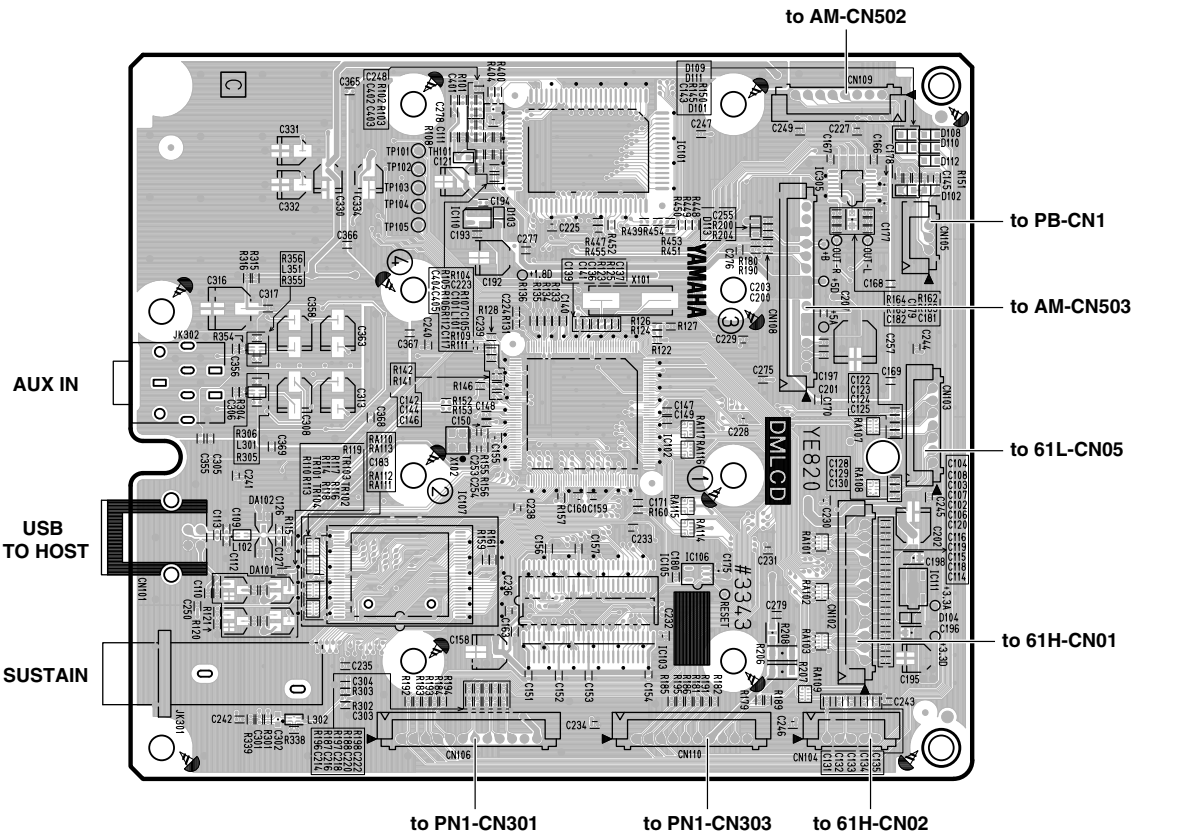

Component Side

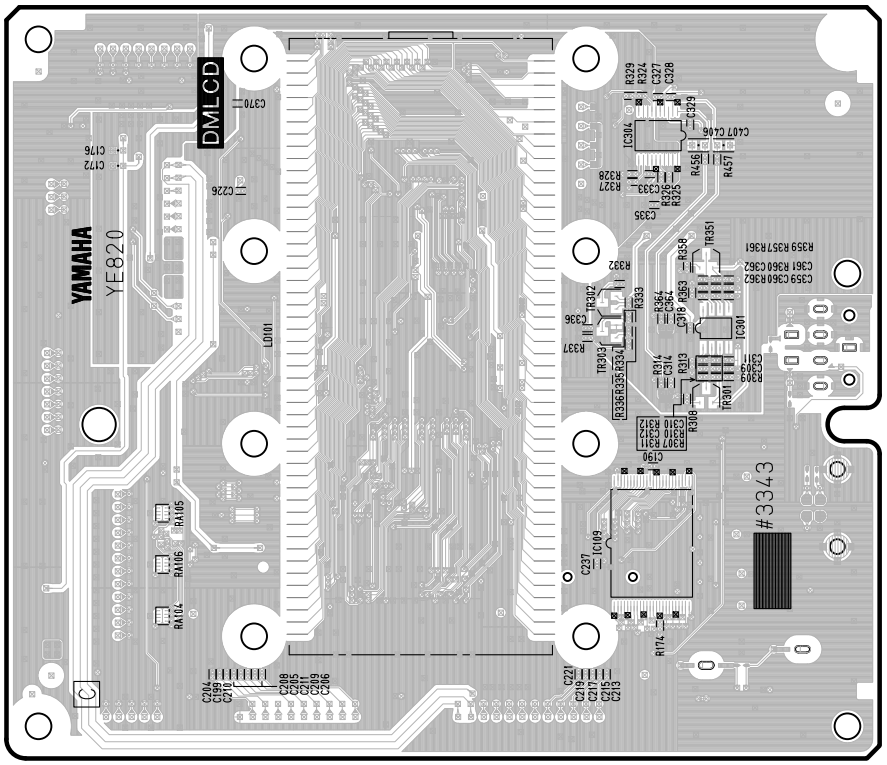

Pattern Side

2NA-ZD70670 ⚠4

● PN1 Circuit Board (YH564C0)

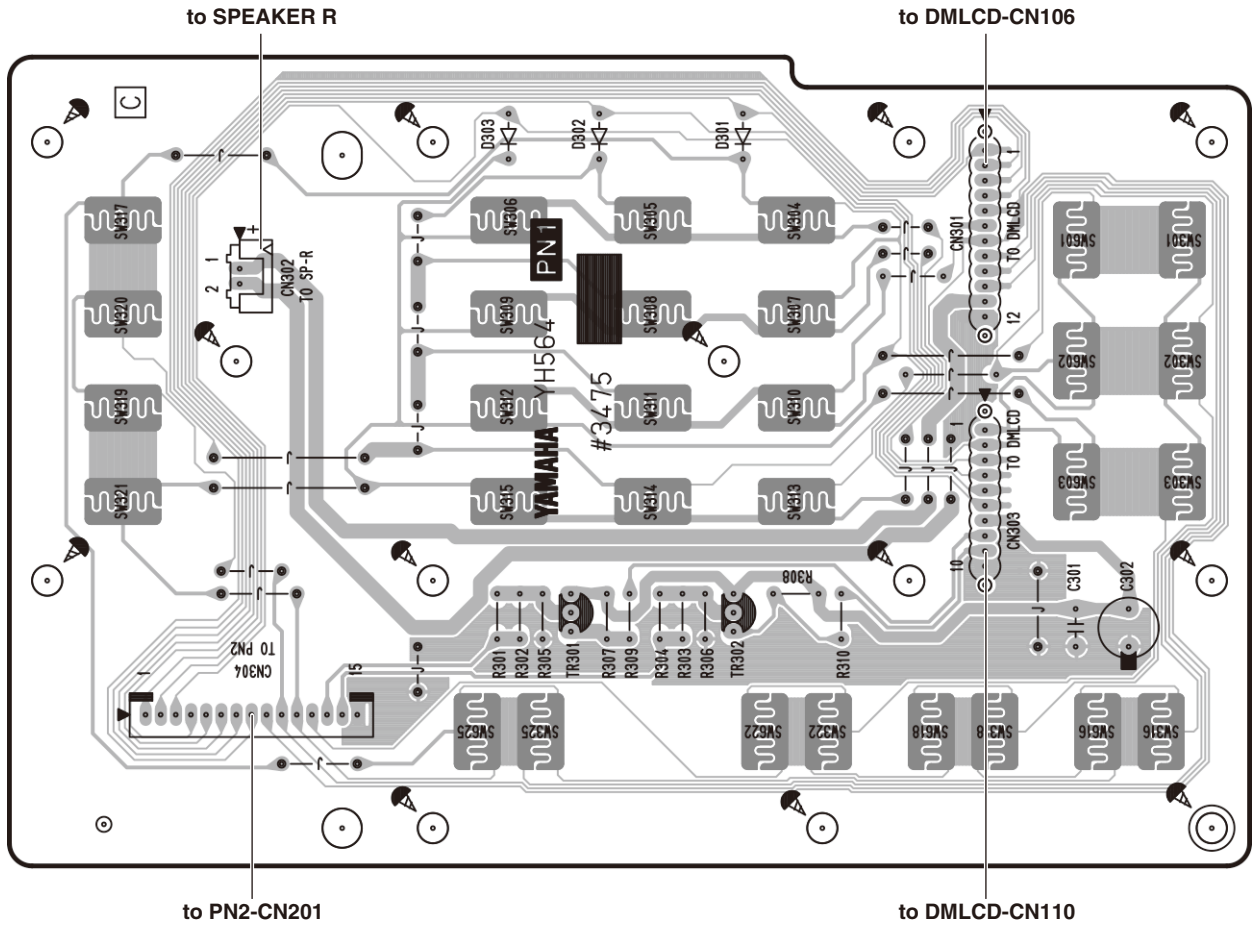

Component Side

2NA-ZT17820

● PN2 Circuit Board (YH565B0)

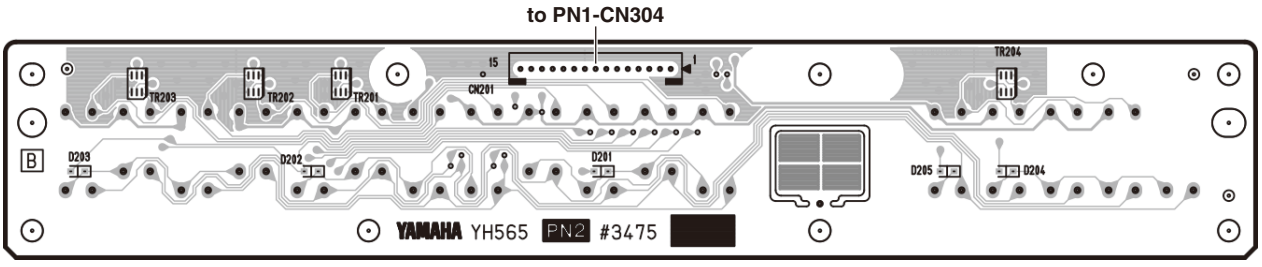

Component Side

2NA-ZT17870

● 61H-MK Circuit Board (X2335D0)

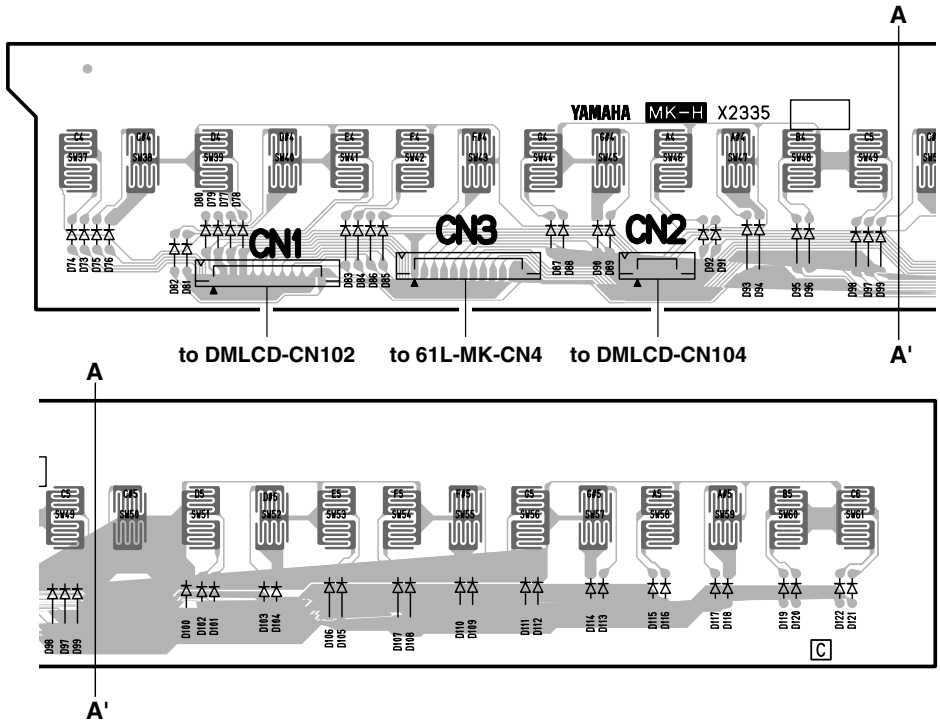

Component Side

2NAKB-V869540

● 61L-MK Circuit Board (X2336C0)

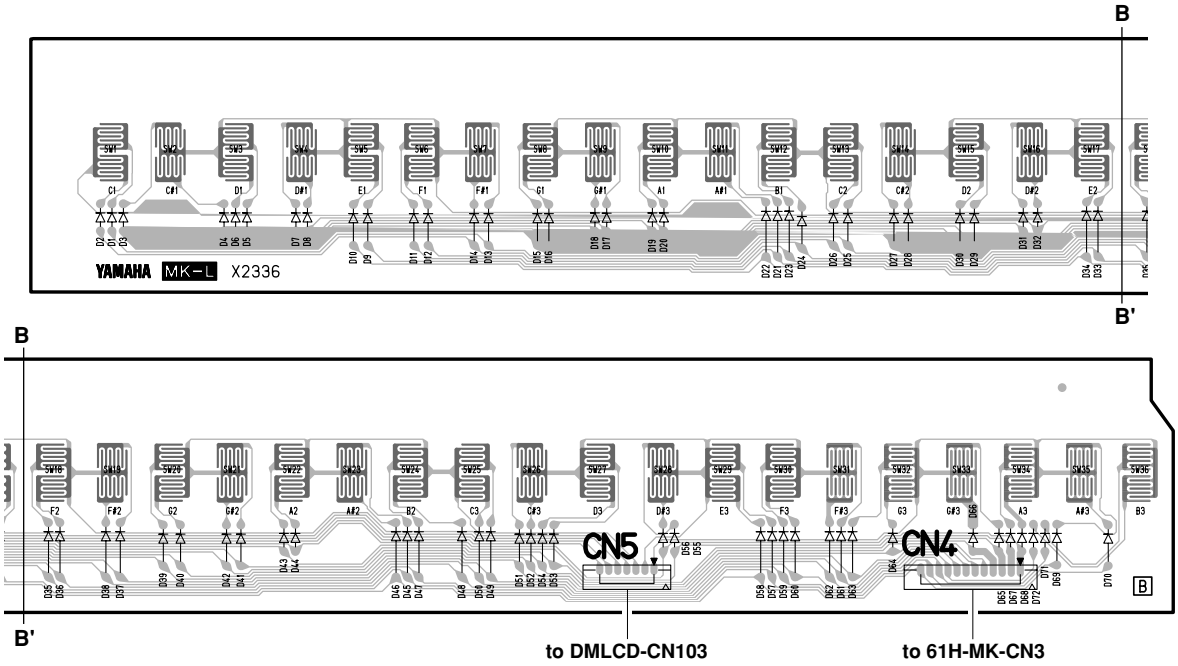

Component Side

2NAKB-V869520

OVER-VOLTAGE DETECTION

If the PSR-A350 detects inputting over-voltage while booting, this function automatically turns the power off.

For example)

Problem The PSR-A350 automatically shuts off while booting:

- It will be turned off after the opening screen “YAMAHA”.
- There is no problem when starting the Test mode.

Possible cause Improper AC adapter is used.

Repairs Replace with the genuine AC adapter PA-130, PA-130A or PA-130B.

1. Features

Detecting voltage and Threshold

- DC IN: 18V or more
- +V (input to the pin No.60 of the IC102): 3.17V or more

Timing of detection

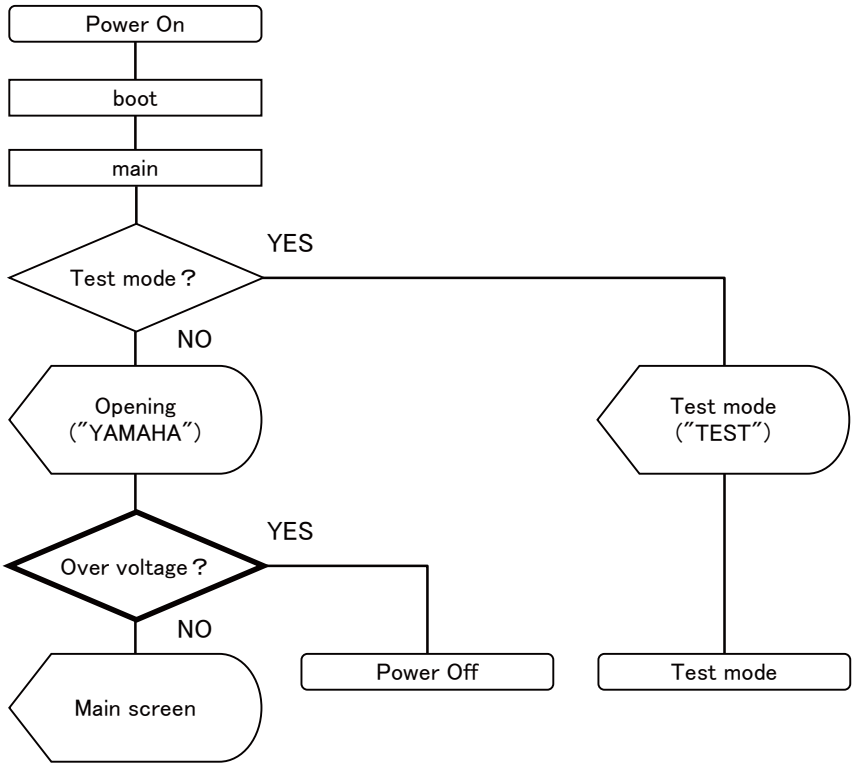

■ DMLCD Circuit Board Test Method

The DMLCD Circuit Board has the test points for repair check purposes.

Check the test points on the DMLCD Circuit Board when the following problems happen.

Problems and Test points

- No display although turning on the power --> Check the test points from No.1 to 7 sequentially
- No sound or distorted sound --> Check the test points No.3, 5, 8 and 9.

Table Point List

NO.	Test Point	Circuit	Judgment criteria	Measured by	Parts with possible defects
①	+B	Power supply voltage	More than 11.0V	Multimeter	TR502 or FZ501 (On AM Circuit Board)
②	+5D	5V power for digital circuit	5.0V±0.5V	Multimeter	IC501 (On AM Circuit Board)
③	+5A	5V power for analog circuit	5.0V±0.5V	Multimeter	IC501 (On AM Circuit Board)
④	+3.3D	3.3V power for digital circuit	3.3V±0.3V	Multimeter	IC111
⑤	+3.3A	3.3V power for analog circuit	3.3V±0.3V	Multimeter	IC111
⑥	+1.8D	1.8V power for digital circuit	1.8V±0.2V	Multimeter	IC110
⑦	RESET	CPU & memory reset signal	3.3V±0.3V	Multimeter	IC106
⑧	OUT-L	DAC output L channel	There shall be audio output without distortion.	Signal Checker	IC305
⑨	OUT-R	DAC output R channel	There shall be audio output without distortion.	Signal Checker	IC305

Caution:

- Use the standard AC adapter PA-130, PA-130A or PA-130B for check operation.

DMLCD Circuit Board (ZT71550)

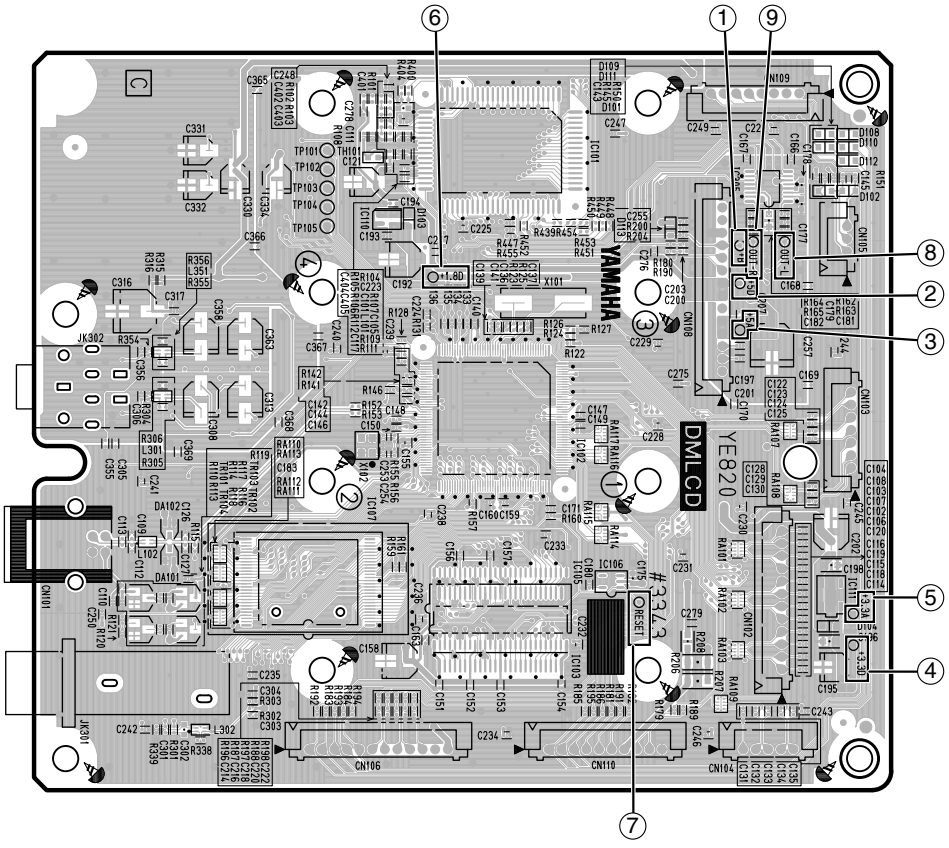

Component Side

TEST PROGRAM

Caution:

- The Test No.061 “Factory Set” will delete all setup data (included the data that the customer has purchased). Be sure to save the important data to a computer via Musicsoft Downloader software, or tell this to the customer in advance.

1. Measurement condition

1-1. Environment

Carry out the tests under the following conditions:

- Ordinary temperature (5°C to 40°C),
- Ordinary humidity (30% to 90%).

1-2. Power source

Use an AC adapter: PA-3C, PA-130, PA-130A or PA-130B.

1-3. Measuring instruments

- Frequency counter which can detect thousandth value or more (for check of the output pitch)
- Level meter (with JIS-C filter) (for check of the output level)
- Oscilloscope (for check of the popping noise level)

* Input impedance of the measuring device should be 1 MΩ or more.

1-4. Jigs

- Foot switch (FC-4A, FC-5 or an equivalent) (for check of the [SUSTAIN] jack)
- USB cable (A-B type) (for check of the [USB TO HOST] terminal)
- PC with the latest USB-MIDI driver installed: (for check of the [USB TO HOST] terminal)
- Oscillator (for inputting a sine wave to the [AUX IN] jack)
- Stereo mini plug cable (for check of the [AUX IN] jack)

1-5. Jack conditions

[PHONES/OUTPUT] jack: Install a measuring instrument (L, R ch: 33Ω load)

[SUSTAIN] jack: Connect a Foot switch before turning the power ON

1-6. PSR-A350 setup

MASTER VOLUME: MAX

Others: the initial setup at turning the power ON

2. Test mode

2-1. Starting Test mode

1) While holding down the keys [C#2], [F2] and [G#2] simultaneously, press the [⏻] (Standby/On) switch.

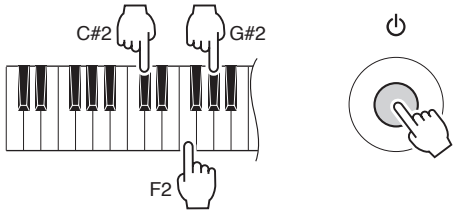

2) When the test program is started, the **"TEST"** message will appear on the LCD.

2-2. Selection/execution of Test items

1) Press the [+] or [-] button in Number buttons area.
2) Press the [START/STOP] button. Refer to the "Test Program Item List" regarding how to operate each test item.
3) To confirm whether the selected test is completed or not:

   Check whether a cursor (**"_"**) is shown or not below the first character of the test item. If **"_"** is shown, the selected test has been executed once.

Exit from the current test.

Execute the following operations depending on **"OK"** or **"NG"** message.

2-3. If the test result shows "OK"

Press the [START/STOP] button again to return to the item selection display.

2-4. If the test result shows "NG"

Press the [DEMO] button or the lowest key (white key C1) to return to the item selection display.

* Note that the [START/STOP] button is ineffective in case of NG.

2-5. Test Program Item List

Number	Test Program Item	Instructions (corresponding to "Selection/execution of Test items")
001	**ROM Version**	Indicates the version written in the ROM. 1) Press the [1] button in Number buttons area to call up the Main Program Version as follows: **"*** Main"** (***: Version)
002	**Memory Check1 All**	Executes a simplified check of all the memories (003-005) at one time. 1) Check the test result. If no problem is found, **"Mem1 OK"** is shown on the LCD. If any problem is found, this test will stop at that timing, then **"NG"** is shown on the LCD with the memory name which has a problem as follows: **"Rom NG"** **"Ram NG"** **"From NG"**
003	**ROM Check1**	Executes a simplified check of the ROM connected to the CPU bus. 1) Check the test result. If no problem is found, **"Rom OK"** will show on the LCD. If any problem is found, **"Rom NG"** will show on the LCD.

Number	Test Program Item	Instructions (corresponding to "Selection/execution of Test items")
004	**RAM Check1**	Executes a simplified check of the RAM connected to the CPU bus. 1) Check the test result. If no problem is found, **"Ram OK"** will show on the LCD. If any problem is found, **"Ram NG"** will show on the LCD.
005	**Flash ROM Check1**	Executes a simplified check of the Flash ROM connected to the CPU bus. 1) Check the test result. If no problem is found, **"FRom OK"** will show on the LCD. If any problem is found, **"FRom NG"** will show on the LCD.
009	**Pitch Check**	Checks whether the correct pitch is output from this instrument or not. 1) Before pressing the [START/STOP] button, connect the Frequency Counter to the [PHONES/OUTPUT] jack on the rear panel. (Either L or R ch) 2) Press the [START/STOP] button to produce the A3 sound. 3) Check the Frequency counter indicator. No problem: the indication is within 441.00±0.2Hz. 4) Press the [START/STOP] button to stop the A3 sound. The LCD screen returns to the test program selection display.
	MInimum Volume level Check	Checks whether the minimum volume level is proper or not. 1) Before pressing the [START/STOP] button, connect the level meter (with JIS-C filter) to the [PHONES/OUTPUT] jack on the rear panel. (Both L and R ch, 33Ω load) 2) Set the MASTER VOLUME to the minimum position. 3) Press the [START/STOP] button to produce the A3 sound. 4) Check the output levels of L and R ch indicated on the Level meter. No problem if the following conditions are satisfied. [PHONES/OUTPUT] (33Ω load) L, R: -70 dBu or less 5) Press the [START/STOP] button to stop the A3 sound. The LCD screen returns to the test program selection display.
011	**Output level R Check**	Checks whether the stereo R sound is output from the [PHONES/OUTPUT] jack properly or not. 1) Before pressing the [START/STOP] button, connect the level meter (with JIS-C filter) to the [PHONES/OUTPUT] jack on the rear panel. (Both L and R ch, 33Ω load) 2) Set the MASTER VOLUME to the maximum position. 3) Press the [START/STOP] button to produce the A3 sound. 4) Check the output levels of L and R ch indicated on the Level meter. No problem if the following conditions are satisfied. [PHONES/OUTPUT] (33Ω load) • R: –2.0 dBu ± 2 dB • L: –45.0 dBu or less 5) Press the [START/STOP] button to stop the A3 sound. The LCD screen returns to the test program selection display.

Number	Test Program Item	Instructions (corresponding to "Selection/execution of Test items")
012	**Output level L Check**	Checks whether the stereo L sound is output from the [PHONES/OUTPUT] jack properly or not. 1) Before pressing the [START/STOP] button, connect the level meter (with JIS-C filter) to the [PHONES/OUTPUT] jack on the rear panel. (Both L and R ch, 33Ω load) 2) Set the MASTER VOLUME to the maximum position. 3) Press the [START/STOP] button to produce the A3 sound. 4) Check the output levels of L and R ch indicated on the Level meter. No problem if the following conditions are satisfied. [PHONES/OUTPUT] (33Ω load) • L: –2.0 dBu ± 2 dB • R: –45.0 dBu or less 5) Press the [START/STOP] button to stop the A3 sound. The LCD screen returns to the test program selection display.
021	**AUX IN Check**	Checks whether the sound is input to the [AUX IN] jack properly or not. 1) Check whether **"AUX In"** will show on the LCD or not when no plug is plugged into the [AUX-IN] jack. 2) Connect an oscillator to the [AUX IN] jack. **"AUX Out"** will show on the LCD when an stereo mini plug cable is plugged into the [AUX IN] jack properly. 3) Connect the level meter (with JIS-C filter) to the [PHONES/OUTPUT] jack on the rear panel. (Both L and R ch, 33Ω load) 4) Input the sine wave (-24dBu, 1kHz) to the R ch of the [AUX IN] jack. 5) Check the output levels of L and R ch indicated on the Level meter. No problem if the following conditions are satisfied. [PHONES/OUTPUT] (33Ω load) • R (input side): –2.0 dBu ± 2 dB • L (nothing side): –55.0 dBu or less 6) For the L ch, make the same operations as in Steps 4 to 5. 7) Unplug the stereo mini cable from the [AUX IN] jack. If no problem is found, **"AUX End"** will show on the LCD.
023	**Switch Check**	Checks whether each panel button works properly or not. 1) Check that the LCD shows you the should-be-pressed button. 2) Press the button specified on the LCD one by one. The sound of the note assigned to the pressed button will be produced. Regarding what note is assigned, refer to the "Switch test item list". * You can exit from this test by pressing the [DEMO] button. * If any problem is found, **"SW NG"** will show on the LCD. * If two or more buttons are pressed simultaneously, **"Over Two"** will show on the LCD.
024	**ALL LED On Check**	Checks whether all the LED lamps light properly or not. 1) Confirms that all the LED lamps light and that there are no unlit or abnormally bright LED lamps.
030	**All LCD On Check**	Checks whether all the LCD dots are turned on properly or not. 1) Check that all the LCD dots are turned on.

Number	Test Program Item	Instructions (corresponding to "Selection/execution of Test items")
031	**All LCD Off Check**	Checks whether all the LCD dots are turned off properly or not. 1) Check that all the LCD dots are turned off.
035	**Pedal1 Check**	Checks whether the Foot switch plugged into the [SUSTAIN] jack works properly or not. 1) Press the [START/STOP] button to produce the C3 sound. 2) Press the Foot switch to produce the C4 sound. 3) Release the Foot switch to stop the C4 sound. If no problem is found, **"PD1 OK"** will show on the LCD. * Connect a Foot switch to the [SUSTAIN] jack before turning the power ON.
039	**Pitch Bend Wheel Check**	Checks whether the PITCH BEND wheel control works properly or not. 1) Press the [START/STOP] button, and **"PB UP 127"** will show on the LCD. 2) Set the [PITCH BEND] wheel to the maximum position and check that the G3 sound is produced. **"PB DW 000"** will show on the LCD. 3) Set the [PITCH BEND] wheel to the minimum position and check that the C3 sound is produced. **"PB C 064"** will show on the LCD. 4) Set the [PITCH BEND] wheel to the center position and check that the C4 sound is produced and **"PB OK"** will show on the LCD. 5) Press the [START/STOP] button to exit the TEST item.
041	**MIDI/USB Check**	Checks whether the [USB TO HOST] terminal works properly or not. 1) Connect a USB cable to the PC with the latest USB-MIDI driver installed. 2) Connect the USB cable to the [USB TO HOST] terminal to produce the C4 sound. If no problem is found, **"MIDI OK"** will show on the LCD.
045	**Voltage detector Check**	Checks whether the Voltage detector works properly or not. 1) Check that **"Volt OK"** is shown on the LCD.
055	**ROM Check2**	Executes the check of the Flash ROM connected to the CPU bus (Full address). 1) Check the test result. If no problem is found, **"Rom OK"** will show on the LCD. If any problem is found, **"Rom NG"** will show on the LCD. It will take about 25 seconds for the check.
056	**RAM Check2**	Executes the check of the RAM connected to the CPU bus (Full address). 1) Check the test result. If no problem is found, **"Ram OK"** will show on the LCD. If any problem is found, **"Ram NG"** will show on the LCD.
057	**Flash ROM Check2**	Executes the check of the Flash ROM connected to the CPU bus (Full address). 1) Check the test result. If no problem is found, **"FRom OK"** will show on the LCD. If any problem is found, **"FRom NG"** will show on the LCD. It will take about 100 seconds for the check.

Number	Test Program Item	Instructions (corresponding to "Selection/execution of Test items")
060	**Keyboard Check**	Checks whether each key works properly or not. 1) Check that the LCD shows you the should-be-pressed key. 2) Press the key specified on the LCD one by one. The each sound between C3 and B4 assigned to the pressed key will be produced. * You can exit from this test by pressing the [DEMO] button. * If the wrong key is pressed, nothing happens. * If two or more keys are pressed simultaneously, **"Over Two"** will show on the LCD. * If the velocity of pressing the key is not suitable, either **"Too Slow"** or **"Too Fast"** will show on the LCD.
061	**Factory Set**	Reset all the backup region of the memories to the initial factory status. 1) Do not turn off the power while **"Fact --"** will show on the LCD. After a while, **"Fact End"** will show on the LCD to indicate that the initializing is completed.
062	**Test Exit**	Lets you exit from the Test mode to the normal mode. 1) Press the [START/STOP] button. The Test Program mode will end, then the PSR-A350 will be restarted. * Never turn off the power until the Main display appears. Doing so may cause a malfunction.

3. Other Tests (Check in Usual mode)

No.	Test Item	Instruction
-	**Popping Noise Level Check**	Checks whether the popping noise level is proper or not when turning the power on and off. 1) Connect an Oscilloscope to the [PHONES/OUTPUT] jack. 2) Set the MASTER VOLUME to the maximum position. 3) Press the [STANDBY/ON] switch to check the noise level indicated on the Oscilloscope when turning the power of the PSR-A350 on and off. No problem if the following conditions are satisfied. [PHONES/OUTPUT] (Both L and R ch, 33Ω load) • L, R: 1.0V peak to peak or less
-	**Noise Level Check**	Checks whether the noise level is proper or not. 1) Connect the level meter (with JIS-C filter) to the [PHONES/OUTPUT] jack on the rear panel. (Both L and R ch, 33Ω load) 2) Set the MASTER VOLUME to the maximum position. 3) Check the output levels of L and R ch indicated on the Level meter. No problem if the following conditions are satisfied. [PHONES/OUTPUT] (33Ω load) • L, R: –75 dBu or less * Do not plug any plugs into the [AUX IN] jack.

No.	Test Item	Instruction
-	**No charging the batteries Check**	Checks whether the voltage is supplied to batteries or not. 1) Connect the AC adapter to the [DC IN] jack. 2) Check the voltage between spring terminal A and B. No problem if no voltage is generated.
-	**Vibration Noise Check**	Checks whether vibration noise occurs on the PSR-A350 or not. 1) Select the Voice following: No.045 (FngrBass) 2) Set the Main Voice volume in the Function to the default value. 3) Set the MASTER VOLUME to the maximum position. 4) Carry out the scaling to check whether vibration noise occurs or not. No problem if no vibration noises occur.

4. Switch test item list

Switch test item list

Turn	SW Name	LCD Display	Note Number
1	DEMO	Demo	C2
2	FUNCTION	Function	C#2
3	METRONOME	Metro	D2
4	TEMPO/TAP	Temp/TAP	D#2
5	LEFT	Left	E2
6	RIGHT	Right	F2
7	KEYS TO SUCCESS	Keys	F#2
8	PHRASE REPEAT	P Rep	G2
9	1 LISTENING	Lesson	G#2
10	SONG	Song	A2
11	VOICE	Voice	A#2
12	STYLE	Style	B2
13	Tenkey 1	Tenkey 1	C3
14	Tenkey 2	Tenkey 2	C#3
15	Tenkey 3	Tenkey 3	D3
16	Tenkey 4	Tenkey 4	D#3
17	Tenkey 5	Tenkey 5	E3
18	Tenkey 6	Tenkey 6	F3
19	Tenkey 7	Tenkey 7	F#3
20	Tenkey 8	Tenkey 8	G3
21	Tenkey 9	Tenkey 9	G#3
22	Tenkey -	Tenkey -	A3
23	Tenkey 0	Tenkey 0	A#3
24	Tenkey +	Tenkey +	B3
25	DUAL	Dual	C4
26	SPLIT	Split	C#4
27	HARMONY/ARPEGGIO	Harmony	D4
28	TOUCH ON/OFF	Touch	D#4
29	A-B REPEAT	AB Rep	E4
30	REW	Rew	F4
31	FF	FF	F#4
32	PAUSE	Pause	G4
33	START/STOP	StartStp	G#4
34	REC	Record	A4
35	ORIENTAL INSTRUMENT/PIANO	Ori/Pno	A#4
36	ULTRA-WIDE STEREO	WIDE	B4
37	MELODY SUPPRESSOR	MelodySP	C5
38	REGIST MEMORY	Regist	C#5
39	SCALE TUNE MEM	SclMem	C2
40	SCALE TUNE MEM 1	SclMem 1	C#2
41	SCALE TUNE MEM 2	SclMem 2	D2
42	SCALE TUNE MEM 3	SclMem 3	D#2
43	SCALE TUNE MEM 4	SclMem 4	E2
44	SCALE TUNE C	SclTunC	F2
45	SCALE TUNE C#	SclTunC#	F#2
46	SCALE TUNE D	SclTunD	G2
47	SCALE TUNE D#	SclTunD#	G#2
48	SCALE TUNE E	SclTunE	A2
49	SCALE TUNE F	SclTunF	A#2
50	SCALE TUNE F#	SclTunF#	B2
51	SCALE TUNE G	SclTunG	C3
52	SCALE TUNE G#	SclTunG#	C#3
53	SCALE TUNE A	SclTunA	D3
54	SCALE TUNE A#	SclTunA#	D#3
55	SCALE TUNE B	SclTunB	E3

BACKUP

The following Backup parameters will be maintained even if the power is turned off.

Backup parameters

- User Songs 1–5
- Style Number 211–220
- Scale Tune Memory
- Registration Memory
- Passing status of Song and Step
- Touch Response on/off
- FUNCTION Settings:

  Style Volume, Song Volume, Tuning, Pitch Bend Range, Split Point, Touch Response Sensitivity, Accompaniment Tuning, Scale Tunings, Registration Freeze, Panel Sustain, Master EQ Type, Metronome Volume, Your Tempo, Demo Group, Demo Play Mode, Demo Cancel, Auto Power Off, Battery Type

In addition to the Backup parameters above, all the data (including Style data that have not been loaded) transferred from the connected computer will be maintained even if you turn off the power.

INITIALIZATION

There are following two methods to initialize the customer's setup data.

Backup Clear

This operation initializes the backup parameters.
While holding down the highest white key, press the [⏻] (Standby/On) switch to turn the power on.

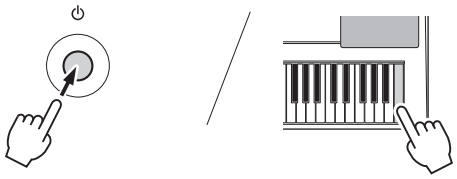

Backup Clear does not delete the data transferred from the connected computer. If you need to delete it, refer to "Flash Clear" below.

Flash Clear

This operation deletes all the Songs and Styles that have been transferred from a computer. Note that Style data registered to Style numbers 211-220 will be maintained. While simultaneously holding the highest white key and the three highest black keys, press the [⏻] (Standby/On) switch to turn the power on.



⚠ CAUTION	▪ **Keep in mind that "Flash Clear" also deletes the data the customer has purchased. Be sure to save the important data to a computer via Musicsoft Downloader software, or tell this to the customer in advance.**

PSR-A350

PARTS LIST

■ CONTENTS

OVERALL ASSEMBLY..... 2
UPPER CASE ASSEMBLY..... 4
LOWER KEY BED ASSEMBLY..... 6
KEYBOARD ASSEMBLY..... 7
ELECTORICAL PARTS..... 8

* DESTINATION ABBREVIATIONS

A:	Australian model	Q:	South-east Asia model
B:	British model	T:	Taiwan model
C:	Canadian model	U:	U.S.A. model
D:	German model	V:	General export model (110V)
E:	European model	W:	General export model (220V)
F:	French model	N,X:	General export model
H:	North European model	Y:	Export model
I:	Indonesian model	K:	Korean model
J:	Japanese model	P:	Brazilian model
M:	South African model	Z:	India mode
O:	Chinese model		

■ WARNING

Components having special characteristics are marked ⚠ and must be replaced with parts having specifications equal to those originally installed.

- The numbers “QTY” show quantities for each unit.
- The parts with “--” in “PART NO.” are not available as spare parts.
- This mark “ } ” in the REMARKS column means these parts are interchangeable.
- The second letter of the shaded ( ) part number is O, not zero.
- The second letter of the shaded ( ) part number is I, not one.

■ OVERALL ASSEMBLY

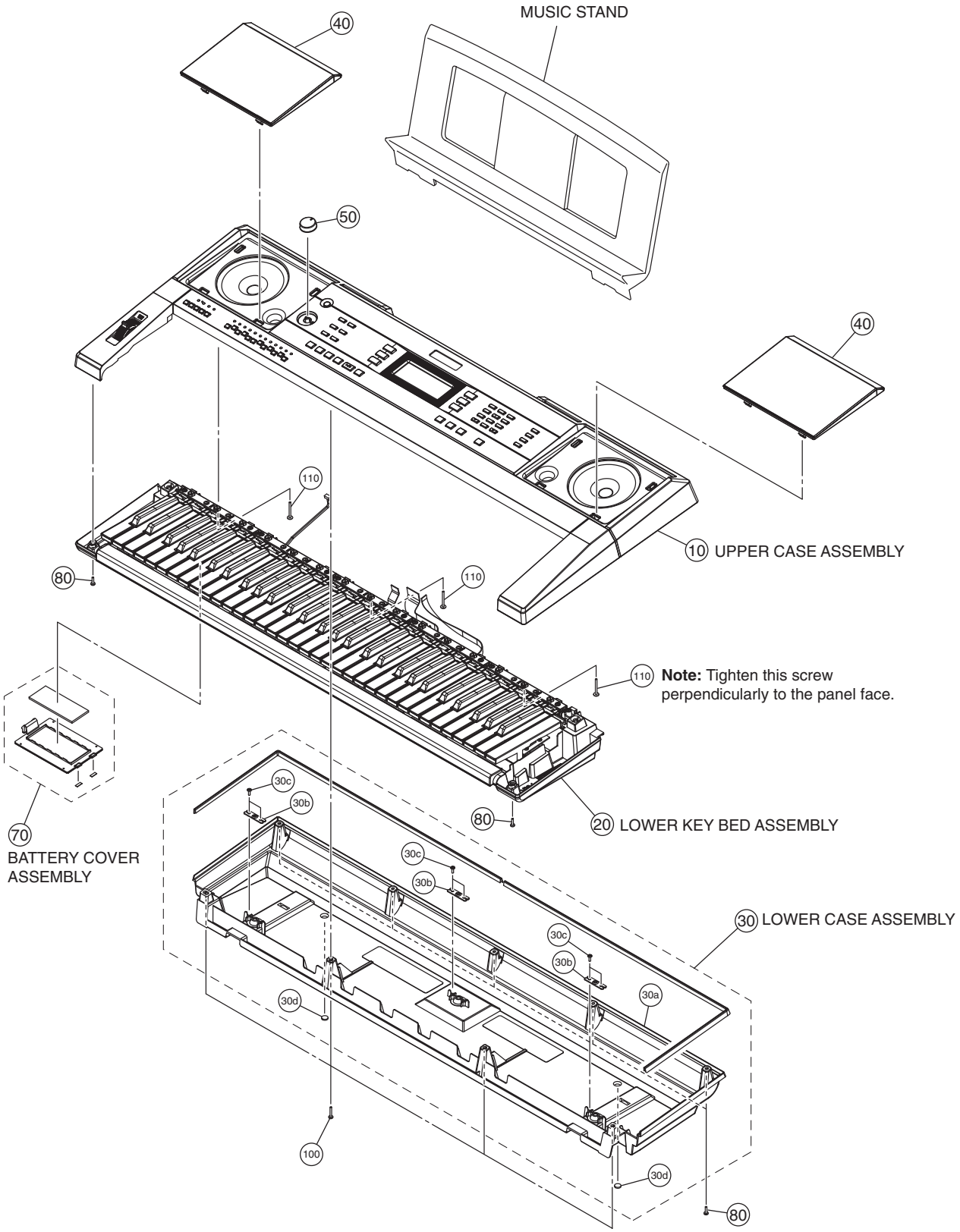

	REF NO.	PART NO.	DESCRIPTION		部　　品　　名	REMARKS		QTY
			OVERALL ASSEMBLY		総組立	PSR-A350		
		--	OVERALL ASSEMBLY	PSR-A350 E	総組立	E,Y	(ZT29100)	
	10	--	UPPER CASE ASSEMBLY	PSR-A350 E	上ケースＡｓｓ'ｙ	E,Y	(ZT29110)	
	20	--	LOWER KEY BED ASSEMBLY		下ケース鍵盤Ａｓｓ'ｙ		(ZE43350)	
	30	**ZE433600**	LOWER CASE ASSEMBLY		下ケースＡｓｓ'ｙ			
	30a	--	LOWERCASE(R)		下ケース成形品（Ｒ）		(ZE49560)	
	30b	--	LEG HOLDER		脚取り付け金具天津製		(VI10440)	3
	30c	**WE774301**	BIND HEAD B-TIGHT SCREW	3.0X8 MFZN2W3	Ｂタイト＋ＢＩＮＤ			6
	30d	**WW693500**	RUBBER FOOT		ゴム脚			2
	40	**ZN221500**	SP GRILLE ASSEMBLY		ＳＰグリルＡｓｓ'ｙ			2
	50	**ZP527600**	VOLUME KNOB	COMMON	ボリュームツマミ			
*	60	**ZT234200**	EMBLEM		エンブレム			
	70	**WR080100**	BATTERY COVER ASSEMBLY		電池蓋Ａｓｓ'ｙ			
	80	**WE98740R**	BIND HEAD TAPPING SCREW-B	3.0X12 MFZN2W3	Ｂタイト＋ＢＩＮＤ			7
	100	**WF491001**	BIND HEAD TAPPING SCREW-B	3.0X30 MFZN2W3	Ｂタイト＋ＢＩＮＤ			4
	110	**ZE329300**	PW HEAD TAPPING SCREW-B	3.0X30 MFZN2W3	Ｂタイト＋ＰＷＨ			3
			ACCESSORIES		付属品			
⚠		**ZG441300**	MUSIC REST WITH BAG	BLACK	譜面板袋入り		E	
		ZM585200	ADAPTER SET	PA-130B E	アダプターセットＴＹ		E	

＊：New Parts(新規部品)

■ UPPER CASE ASSEMBLY

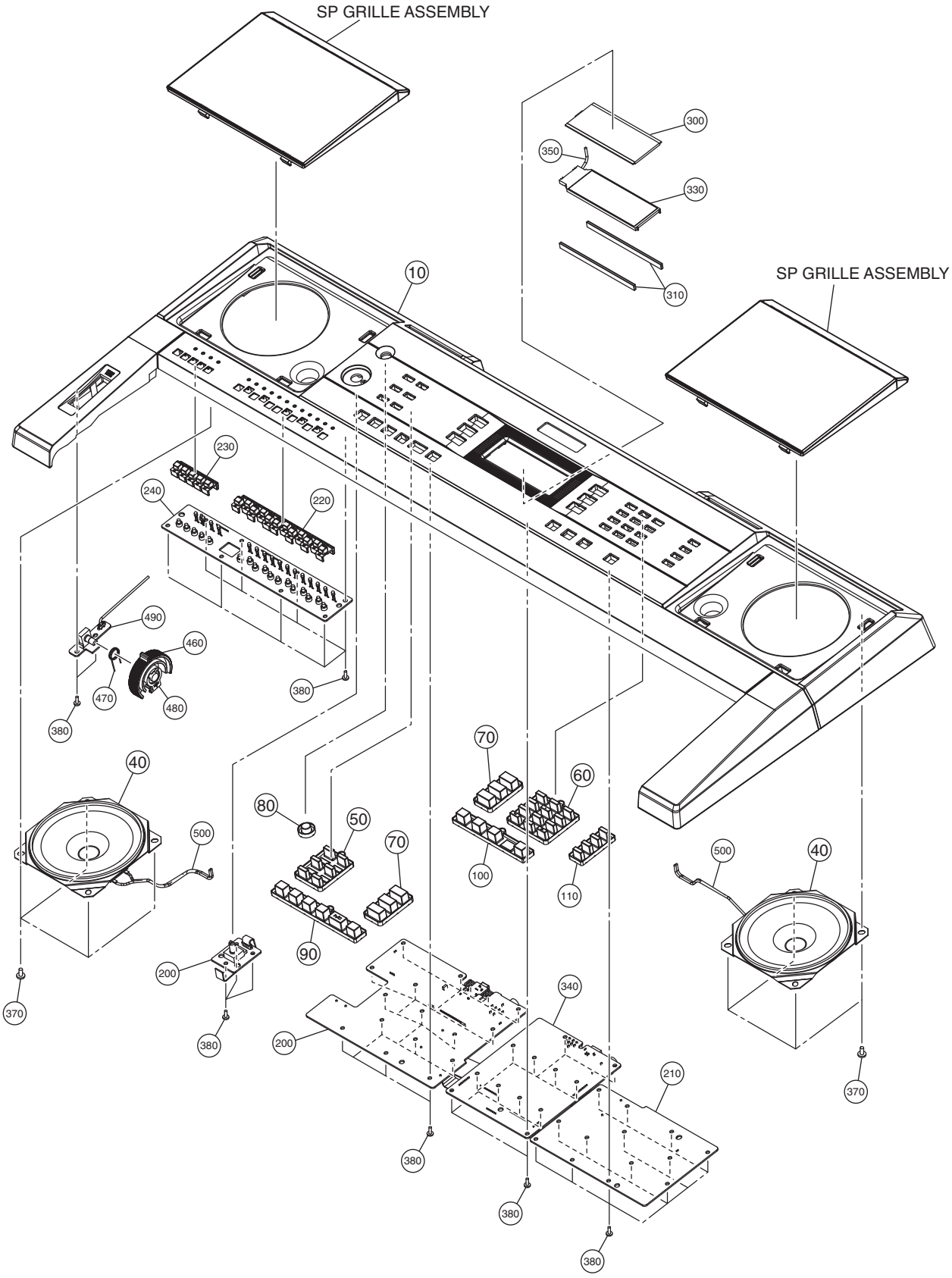

	REF NO.	PART NO.	DESCRIPTION		部　　品　　名	REMARKS	QTY
		--	UPPER CASE ASSEMBLY	PSR-A350 E	上ケースＡｓｓ'ｙ	E,Y (ZT29110)	
*	10	**ZT291200**	UPPER CASE FINISHED	PSR-A350 E	上ケース塗装印刷品	E,Y	
	40	**YD136A00**	LOUD SPEAKER	12.0CM 4OHM 3W	スピーカ		2
	50	**ZN222700**	PN SWITCH		ＰＮスイッチ	DEMO,FUNCTION,METRONOME, TEMPO/TAP,PART L,PART R	
	60	**ZN222800**	PN SWITCH		ＰＮスイッチ	0-9,+,-	
	70	**ZN222900**	PN SWITCH		ＰＮスイッチ	KEYS TO SUCCESS,PHRASE REPEAT,1 LISTENING,2 TIMING, 3 WAITING, SONG,VOICE,STYLE	2
	80	**ZN223000**	PN SWITCH		ＰＮスイッチ	Standby/On	
	90	**ZN223100**	PN SWITCH		ＰＮスイッチ	A-B REPEAT,REW,FF, PAUSE,START/STOP,REC	
	100	**ZN223200**	PN SWITCH		ＰＮスイッチ	ORIENTAL INSTRUMENT/PIANO, ULTRA-WIDE STEREO,	
	110	**ZN223300**	PN SWITCH		ＰＮスイッチ	MELODY SUPPERESSOR, REGIST MEMORY DUAL,SPLIT,HARMONY/ARPEGGIO, TOUCH	
*	200	**ZT178400**	CIRCUIT BOARD	AM	ＡＭシート		
*	210	**ZT178500**	CIRCUIT BOARD	PN1	ＰＮ１シート		
*	220	**ZT208700**	PN SWITCH		ＰＮスイッチ	SCALE MEMORY/MEMORY ,1,2,3,4	
*	230	**ZT208800**	PN SWITCH		ＰＮスイッチ	SCALE SETTING/C,C#,D,D#,E,F,F#, G,G#,A,A#,B	
*	240	**ZT178800**	CIRCUIT BOARD	PN2	ＰＮ２シート		
	300	**ZN362500**	LCD DISPLAY	TTR2A2733	液晶ディスプレイ		
	310	**WZ963200**	RUBBER CONNECTOR	ZEBRA	ゴムコネクター		2
	330	**WE20020R**	BACK-LIGHT ASSEMBLY		バックライトＡｓｓ'ｙ		
*	340	**ZT715500**	CIRCUIT BOARD	DMLCD	ＤＭＬＣＤシート		
	350	--	WIRING ASSEMBLY	BL 2P L=70 P=2.0	ＢＬ線材	(WE14140)	
	370	**WE97460R**	BIND HEAD TAPPING SCREW-B	4.0X8 MFZN2W3	Ｂタイト＋ＢＩＮＤ		8
	380	**WE774301**	BIND HEAD TAPPING SCREW-B	3.0X8 MFZN2W3	Ｂタイト＋ＢＩＮＤ		55
*	460	**ZT234000**	WHEEL	COMMON	ホイール		
	470	**VT44010R**	SPRING		ホイールバネ		
	480	--	GREASE PK G31KA (1KG)	G-31KA(KANTO-KASEI	グリス	(VE96850)	0
	490	**WE35540R**	CIRCUIT BOARD	PB	ＰＢシート		
	500	--	CONNECTOR ASSEMBLY	SP 2P L=150 P=2.0	ＳＰ線材	(ZE84940)	2

＊：New Parts(新規部品)

■ LOWER KEY BED ASSEMBLY

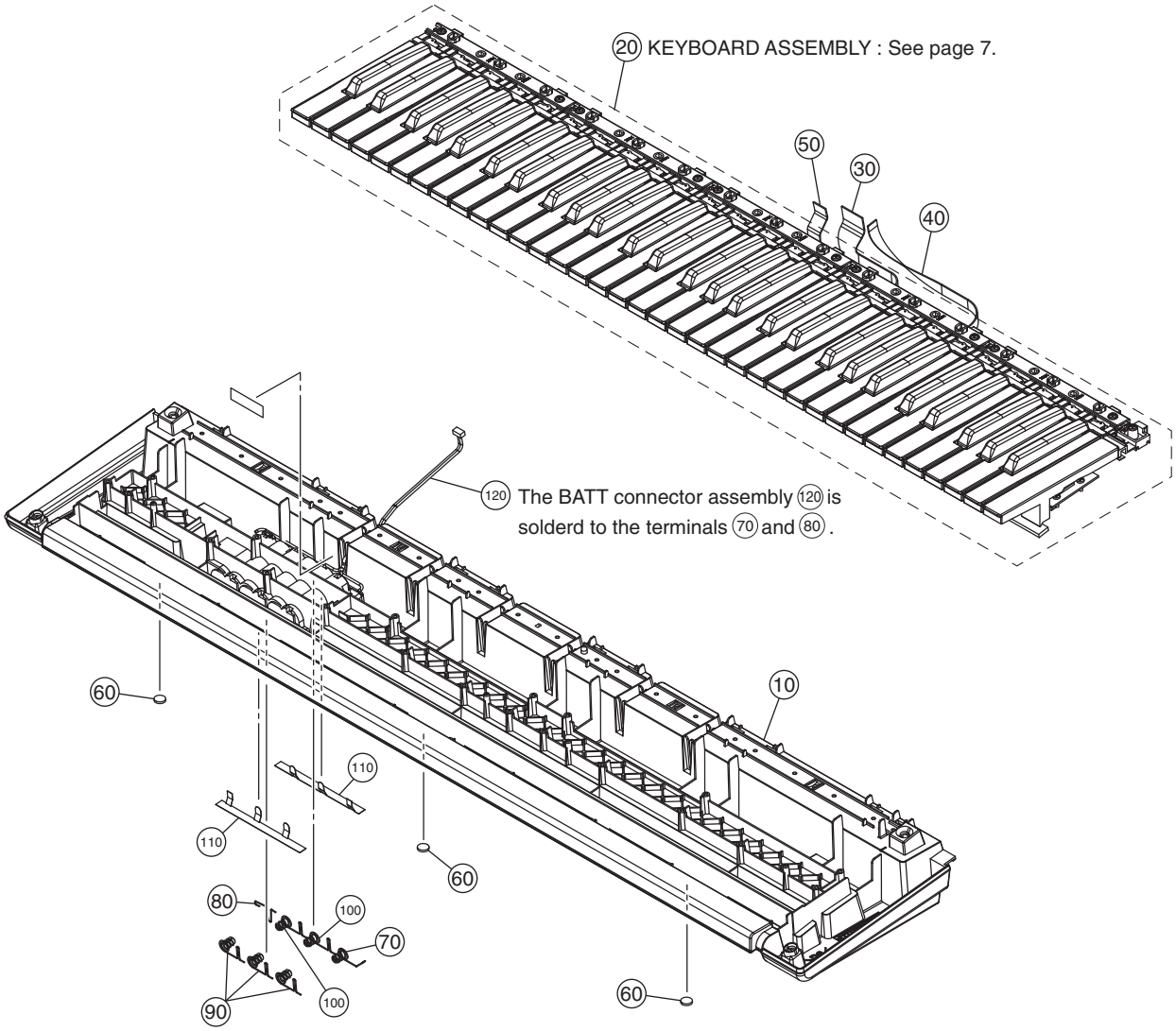

REF NO.	PART NO.	DESCRIPTION		部品名	REMARKS	QTY
	--	LOWER KEY BED ASSEMBLY		下ケース鍵盤Ａｓｓ'ｙ	(ZE43350)	
10	**ZE418400**	LOWER CASE F		下ケースＦ成形品（Ｆ）		
20	--	16NS KEYBOARD	16NS-C61 2M	１６ＮＳ－Ｃ６１鍵盤（Ｃ６１－２Ｍ）	(ZE37100)	
30	--	WIRING ASSEMBLY ASSEMBLY	MK1 12P L=220	ＭＫ１束線	(WE13850)	
40	--	WIRING ASSEMBLY ASSEMBLY	MK2 5P L=250	ＭＫ２束線	(WE13870)	
50	--	WIRING ASSEMBLY ASSEMBLY	MK3 7P L=190	ＭＫ３束線	(WE13880)	
60	**WW693500**	RUBBER FOOT		ゴム脚		3
70	**WD87920R**	SPRING TERMINAL A		接点バネ　A		
80	**WD87930R**	SPRING TERMINAL B		接点バネ　B		
90	**WD87940R**	SPRING TERMINAL C		接点バネ　C		3
100	**WD87970R**	SPRING TERMINAL D		接点バネ　D		2
110	**ZR125000**	NONWOVEN CLOTH	99X20X0.5T	不織布		2
120	--	CONNECTOR ASSEMBLY BATT		ＢＡＴＴ束線	(WQ73930)	
120	--	CONNECTOR ASSEMBLY BATT		ＢＡＴＴ束線	(WQ73939)	

＊: New Parts(新規部品)

■ KEYBOARD ASSEMBLY

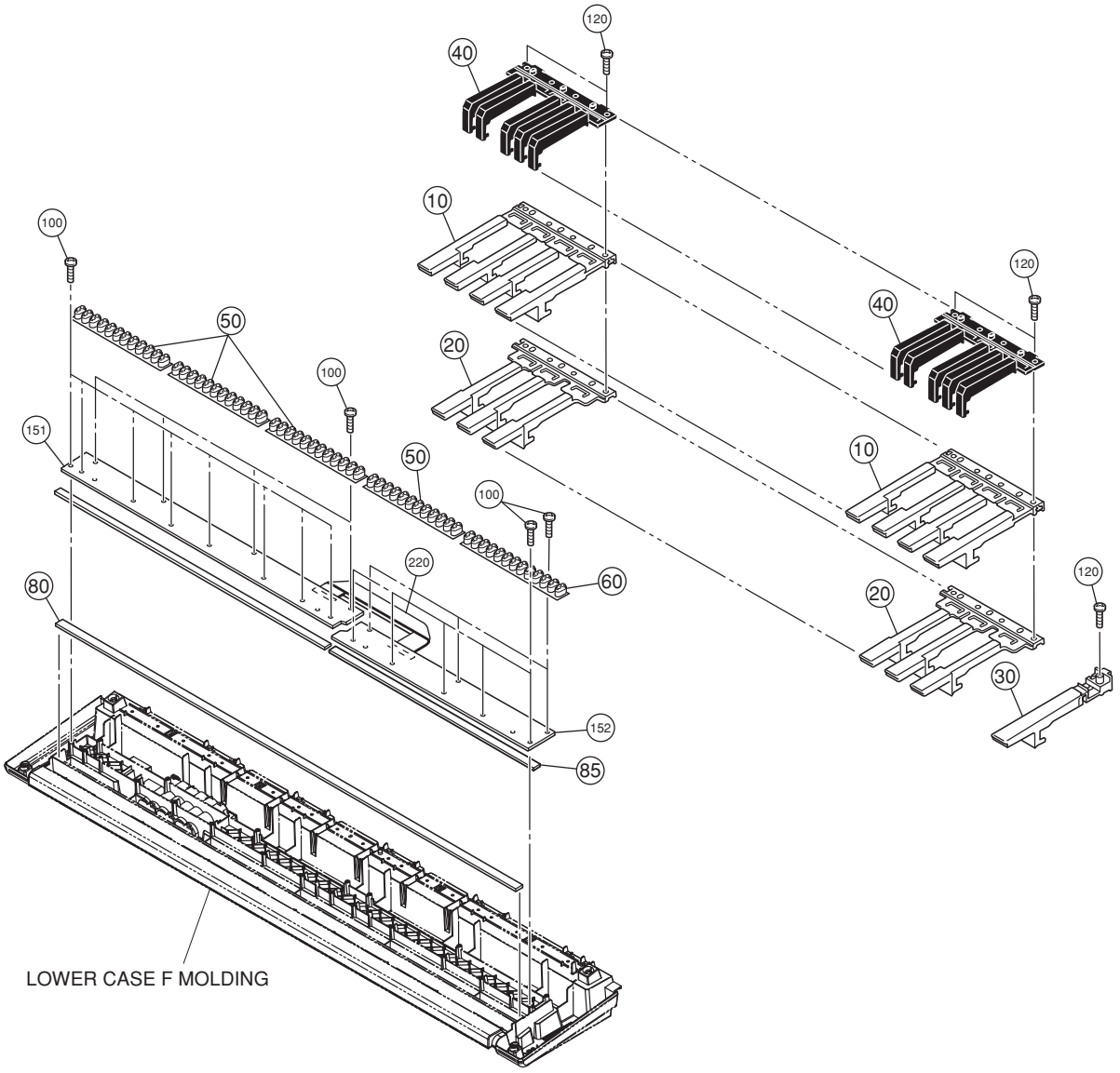

REF NO.	PART NO.	DESCRIPTION		部品名	REMARKS	QTY
		KEYBOARD ASSEMBLY		鍵盤Ａｓｓ'ｙ		
	--	16NS KEYBOARD	16NS-C61-2M	１６ＮＳ鍵盤（Ｃ６１－２Ｍ）	(ZE37100)	
10	**ZE369800**	WHITE KEY	16NS CEGB	白鍵　ＣＥＧＢ		5
20	**ZE369900**	WHITE KEY	16NS DFA	白鍵　ＤＦＡ		5
30	**V476030R**	WHITE KEY 16N C' PSR-170/	16NS C'	白鍵Ｃ		
40	**WZ168300**	BLACK KEY T=1.5	16NS #	黒鍵		5
50	**V3413601**	RUBBER CONTACT	16N-2M OCT 2M	接点ゴム１６Ｎ２Ｍ		4
60	**V747740R**	RUBBER CONTACT	16N-2M 13K 2M	接点ゴム１６Ｎ２Ｍ		
80	**VZ303000**	FELT L 11X827 WH	827 11 SHIRO	フェルトＬ		
85	**VZ302901**	FELT U836	836 5 SHIRO	フェルトＵ		
100	**WE774301**	BIND HEAD TAPPING SCREW-B	3.0X8 MFZN2W3	Ｂタイト＋ＢＩＮＤ		20
120	**WF49200R**	BIND HEAD TAPPING SCREW-P	3.0X20 MFZN2W3	Ｐタイト＋ＢＩＮＤ		11
151	**V869530R**	CIRCUIT BOARD	61L-MK 16N2M	６１Ｌシート		
152	**V869550R**	CIRCUIT BOARD	61H-MK 16N2M	６１Ｈシート		
220	--	WIRING ASSEMBLY	16N-C61 12P L=210 P=2.0	中継束線	(V869620)	

*：New Parts(新規部品)

■ ELECTORICAL PARTS

DMLCD,AM,PN1

	REF NO.	PART NO.	DESCRIPTION		部品名	REMARKS	QTY
			ELECTORICAL PARTS		電気部品	PSR-A350	
*		**ZT715500**	CIRCUIT BOARD	DMLCD	ＤＭＬＣＤシート	(YE820C0)(ZT71530)	
*		**ZT178400**	CIRCUIT BOARD	AM	ＡＭシート	(YH564C0)(ZT17820)	
*		**ZT178500**	CIRCUIT BOARD	PN1	ＰＮ１シート	(YH564C0)(ZT17820)	
*		**ZT178800**	CIRCUIT BOARD	PN2	ＰＮ２シート	(YH565B0)(ZT17870)	
		V869530R	CIRCUIT BOARD	61L-MK 16N2M	６１Ｌシート	(X2336C0)(V869520)	
		V869550R	CIRCUIT BOARD	61H-MK 16N2M	６１Ｈシート	(X2335D0)(V869540)	
		WE35540R	CIRCUIT BOARD	PB	ＰＢシート	(X5067A0)(WE35530)	
*		**ZT715500**	CIRCUIT BOARD	DMLCD	ＤＭＬＣＤシート	(YE820C0)(ZT71530)	
	CN101	**V6802600**	CONNECTOR	USB 4P SE	ＵＳＢジャック	USB TO HOST	
	JK301	**VC68750R**	CONNECTOR	JACK YKB21-5014	ホーンコネクタ（黒）	SUSTAIN	
	JK301	**WE24520R**	CONNECTOR	JY-6314-01-020	ホーンコネクタ（黒）		
	JK302	**ZA590000**	CONNECTOR	JACK MINI STEREO	ホーンコネクタ	AUX IN	
	C121	**UF037101**	CAPACITOR	10 16V	チップケミコン		
	C158	**UF017471**	CAPACITOR	47 6.3V	チップケミコン		
	C202	**UF017471**	CAPACITOR	47 6.3V	チップケミコン		
	C257	**UF038100**	CAPACITOR	100 16V	チップケミコン		
	C308	**UF03722R**	ELECTROLYTIC CAPACITOR(CHIP)	22 16V	チップケミコン		
	C313	**UF03722R**	ELECTROLYTIC CAPACITOR(CHIP)	22 16V	チップケミコン		
	C316	**UF038100**	CAPACITOR	100 16V	チップケミコン		
	C330	**UF037101**	CAPACITOR	10 16V	チップケミコン		
	-332	**UF037101**	CAPACITOR	10 16V	チップケミコン		
	C334	**UF037101**	CAPACITOR	10 16V	チップケミコン		
	C358	**UF03722R**	ELECTROLYTIC CAPACITOR(CHIP)	22 16V	チップケミコン		
	C363	**UF03722R**	ELECTROLYTIC CAPACITOR(CHIP)	22 16V	チップケミコン		
	D101	**WC398800**	DIODE	KDS160-RTK/P TP	ダイオード		
	D102	**WC398800**	DIODE	KDS160-RTK/P TP	ダイオード		
	D108	**WC398800**	DIODE	KDS160-RTK/P TP	ダイオード		
	-113	**WC398800**	DIODE	KDS160-RTK/P TP	ダイオード		
	IC101	**XZ987A01**	IC	ML9040A-B01GAZ03A	ＣＰＵ／周辺ＩＣ	LCD DRIVER	
	IC101	**YC471A00**	IC	SPLC780D1-001A-HQ1	ＣＰＵ／周辺ＩＣ		
	IC102	**YA876A02**	IC	SWL01U	ＣＰＵ／周辺ＩＣ	CPU (SWL01U)	
	IC103	**X5693D00**	IC	M12L16161A-7TG2Q S	メモリＩＣ　１６Ｍ	SDRAM 16M	
	IC106	**X4498A01**	IC	BD5242G	ＩＣデジタル	RESET	
*	IC107	**YH655B00**	IC	WAVE/PROGRAM #3475	書込済ＲＯＭ	PROG/WAVE FLASH ROM 128M	
	IC109	**X3042E01**	IC	MX29LV160DBTI-70G	メモリＩＣ１６Ｍ	BACKUP FLASH ROM 16M	
	IC109	**X8950C00**	IC	EN29LV160CB-70TIP	メモリＩＣ　１６Ｍ		
	IC110	**YC287A01**	IC	RP130Q181D-TR-FE	電源ＩＣ	REGULATOR +1.8V	
	IC111	**YD113A00**	IC	RP131H331D-T1-FE 3	電源ＩＣ	REGULATOR +3.3V	
	IC301	**YA326A00**	IC	BA4580RF-E2 OPAMP	アンプＩＣ　ＳＯＰ	OPAMP (AUX IN)	
	IC304	**X7357B00**	IC	PCM1803ADBR	ＩＣ	ADC	
	IC305	**YC681A00**	IC	WM8524GEDT/R	ＩＣ	DAC	
	IC305	**YC681B00**	IC	WM8524CGEDT/R	ＩＣ		
	R206	**RD154221**	CARBON RESISTOR (CHIP)	22.0 1/4 J TP	チップ抵抗		
	R207	**RD154221**	CARBON RESISTOR (CHIP)	22.0 1/4 J TP	チップ抵抗		
	TR101	**VV556401**	TRANSISTOR	2SC 2412K Q,R,S TP	トランジスタ　２ＳＣ	USB TO HOST +VCC	
	TR102	**VV556501**	TRANSISTOR	2SA 1037AK Q,R,S TP	トランジスタ　２ＳＡ	USB TO HOST +D	
	TR103	**VV556501**	TRANSISTOR	2SA 1037AK Q,R,S TP	トランジスタ　２ＳＡ	USB TO HOST VCC	
	TR104	**VV556401**	TRANSISTOR	2SC 2412K Q,R,S TP	トランジスタ　２ＳＣ	USB TO HOST +D	
	X101	**WE19440R**	QUARTZ CRYSTAL UNIT	16.9344M HC-49S-SM	水晶振動子		
	X102	**ZA136200**	QUARTZ CRYSTAL UNIT	48.000M DSX321G 48	水晶振動子		
*		**ZT178400**	CIRCUIT BOARD	AM	ＡＭシート	(YH564C0)(ZT17820)	
*		**ZT178500**	CIRCUIT BOARD	PN1	ＰＮ１シート	(YH564C0)(ZT17820)	
⚠	D505	**WV008801**	DIODE	2A02-A0 TE- 52	ダイオード		
⚠	FZ501	**WY516700**	CURRENT CUTOFF FUSE	T 2.00A S	ヒユーズ		
⚠	FZ501	**--**	CURRENT CUTOFF FUSE	T 2.00A J.U.S.B	ヒユーズ	(ZN83880)	
	IC501	**X5887A0R**	IC	BA50BC0T +5V 1.0A	電源ＩＣＴＯ－２２０	REGULATOR +5V	
	IC502	**XV771A00**	IC	BA5417 5.0W 2CH	アンプＩＣＳＩＰ２.	POWER AMP 5.0W 2CH	
	JK501	**VV943300**	CONNECTOR	JACK HTJ-064-04A	ホーンコネクタ	PHONES/OUTPUT	
	JK501	**WJ306200**	CONNECTOR	MSJ-064-15A B AG	ホーンコネクタ		
⚠	JK502	**WZ704401**	CONNECTOR	DC-502-AG-PBT-2.0-	電源コネクタ	DC IN 12V	
	TR502	**ZA675500**	FET	TJ20A10M3	ＦＥＴ	+B	
	VR701	**WC70980R**	ROTARY VARIABLE RESISTOR	A 5.0K XV014111YGP	二連ロータリーＶＲ	MASTER VOLUME	
	WH010	**--**	WIRING ASSEMBLY	12P L=100	線材	(ZA18670)	
	WH020	**--**	WIRING ASSEMBLY	8P L=75	線材	(ZA18020)	
	WH030	**--**	WIRING ASSEMBLY	14P L=175	線材	(ZA27740)	
	WH040	**--**	WIRING ASSEMBLY	5P L=100	線材	(ZA17550)	
	WH050	**--**	WIRING ASSEMBLY	4P L=50	線材	(ZA17370)	

＊： New Parts(新規部品)

AM,PN1

REF NO.	PART NO.	DESCRIPTION		部品名	REMARKS	QTY
WH050	--	WIRING ASSEMBLY	4P L=50	線材	(ZA17371)	
WH060	--	WIRING ASSEMBLY	10P L=100	線材	(ZA18350)	
C301	**WS464801**	SEMICONDUCTOR CERAMIC CAP.	0.1000 25V Z TATE	半導体セラコン		
C302	**UR828470**	ELECTROLYTIC CAPACITOR	470.00 10.0V RX TP	ケミコン		
C501	**UR838471**	ELECTROLYTIC CAPACITOR	470.00 16.0V RX TP	ケミコン		
C502	**WS464801**	SEMICONDUCTOR CERAMIC CAP.	0.1000 25V Z TATE	半導体セラコン		
C504	**UR866101**	ELECTROLYTIC CAPACITOR	1.00 50.0V RX TP	ケミコン		
C505	**UR866101**	ELECTROLYTIC CAPACITOR	1.00 50.0V RX TP	ケミコン		
C506	**FG612470**	CERAMIC CAPACITOR	470P 50V K RX TP	セラコン（B）		
C506	**WW465600**	CERAMIC CAPACITOR	470P 63V K TATETE-	セラコン		
C508	**WS464801**	SEMICONDUCTOR CERAMIC CAP.	0.1000 25V Z TATE	半導体セラコン		
C510	**UR837471**	ELECTROLYTIC CAPACITOR	47.00 16.0V RX TP	ケミコン		
C512	**FG612470**	CERAMIC CAPACITOR	470P 50V K RX TP	セラコン（B）		
C512	**WW465600**	CERAMIC CAPACITOR	470P 63V K TATETE-	セラコン		
C513	**UR837471**	ELECTROLYTIC CAPACITOR	47.00 16.0V RX TP	ケミコン		
C514	**UR838102**	ELECTROLYTIC CAPACITOR	100.00 16.0V RX TP	ケミコン		
C515	**UR838102**	ELECTROLYTIC CAPACITOR	100.00 16.0V RX TP	ケミコン		
C516	**UR849100**	ELECTROLYTIC CAPACITOR	1000 25.0V RX TP	ケミコン		
C519	**VE326200**	MONOLITHIC POLYESTER F. CAP.	0.15 50V J RX TP	積層マイラーコン		
C519	**WW501700**	MONOLITHIC POLYESTER F. CAP.	0.1500 63V J TP	マイラーコン		
C520	**UR838102**	ELECTROLYTIC CAPACITOR	100.00 16.0V RX TP	ケミコン		
C521	**VE326200**	MONOLITHIC POLYESTER F. CAP.	0.15 50V J RX TP	積層マイラーコン		
C521	**WW501700**	MONOLITHIC POLYESTER F. CAP.	0.1500 63V J TP	マイラーコン		
C522	**UR838471**	ELECTROLYTIC CAPACITOR	470.00 16.0V RX TP	ケミコン		
C523	**UR838471**	ELECTROLYTIC CAPACITOR	470.00 16.0V RX TP	ケミコン		
C524	**UR837471**	ELECTROLYTIC CAPACITOR	47.00 16.0V RX TP	ケミコン		
C525	**UR837471**	ELECTROLYTIC CAPACITOR	47.00 16.0V RX TP	ケミコン		
C530	**WS464801**	SEMICONDUCTOR CERAMIC CAP.	0.1000 25V Z TATE	半導体セラコン		
-534	**WS464801**	SEMICONDUCTOR CERAMIC CAP.	0.1000 25V Z TATE	半導体セラコン		
C541	**WS464801**	SEMICONDUCTOR CERAMIC CAP.	0.1000 25V Z TATE	半導体セラコン		
C542	**WS464801**	SEMICONDUCTOR CERAMIC CAP.	0.1000 25V Z TATE	半導体セラコン		
D301	**VD631601**	DIODE	1SS133,176,HSS104	ダイオード		
-303	**VD631601**	DIODE	1SS133,176,HSS104	ダイオード		
D502	**VD631601**	DIODE	1SS133,176,HSS104	ダイオード		
-504	**VD631601**	DIODE	1SS133,176,HSS104	ダイオード		
L502	--	JUMPER CABLE	0.55 TIN	ジャンパー線	(VA07890)	
L503	--	JUMPER CABLE	0.55 TIN	ジャンパー線	(VA07890)	
R301	**HF455560**	CARBON RESISTOR	560.0 1/4 J AX TP	カーボン抵抗		
-304	**HF455560**	CARBON RESISTOR	560.0 1/4 J AX TP	カーボン抵抗		
R305	**HF458100**	CARBON RESISTOR	100.0K 1/4 J AX TP	カーボン抵抗		
R306	**HF458100**	CARBON RESISTOR	100.0K 1/4 J AX TP	カーボン抵抗		
R307	**HF457100**	CARBON RESISTOR	10.0K 1/4 J AX TP	カーボン抵抗		
R308	**HF457100**	CARBON RESISTOR	10.0K 1/4 J AX TP	カーボン抵抗		
R309	**HF456100**	CARBON RESISTOR	1.0K 1/4 J AX TP	カーボン抵抗		
R310	**HF456100**	CARBON RESISTOR	1.0K 1/4 J AX TP	カーボン抵抗		
R501	**HF455180**	CARBON RESISTOR	180.0 1/4 J AX TP	カーボン抵抗		
R502	**HF455180**	CARBON RESISTOR	180.0 1/4 J AX TP	カーボン抵抗		
R503	**HF457330**	CARBON RESISTOR	33.0K 1/4 J AX TP	カーボン抵抗		
R504	**HF457330**	CARBON RESISTOR	33.0K 1/4 J AX TP	カーボン抵抗		
R505	**HF457100**	CARBON RESISTOR	10.0K 1/4 J AX TP	カーボン抵抗		
R506	**HF457100**	CARBON RESISTOR	10.0K 1/4 J AX TP	カーボン抵抗		
R507	**HF455470**	CARBON RESISTOR	470.0 1/4 J AX TP	カーボン抵抗		
R508	**HF456100**	CARBON RESISTOR	1.0K 1/4 J AX TP	カーボン抵抗		
R509	**HF456100**	CARBON RESISTOR	1.0K 1/4 J AX TP	カーボン抵抗		
R510	**HF455470**	CARBON RESISTOR	470.0 1/4 J AX TP	カーボン抵抗		
R511	**WW158100**	FLAME PROOF CARBON RESISTOR	2.2 1/4 J T26	不燃化カーボン抵抗		
R512	**HF457470**	CARBON RESISTOR	47.0K 1/4 J AX TP	カーボン抵抗		
R513	**WW158100**	FLAME PROOF CARBON RESISTOR	2.2 1/4 J T26	不燃化カーボン抵抗		
R514	**HF455330**	CARBON RESISTOR	330.0 1/4 J AX TP	カーボン抵抗		
R515	**HF455330**	CARBON RESISTOR	330.0 1/4 J AX TP	カーボン抵抗		
R516	**HF457180**	CARBON RESISTOR	18.0K 1/4 J AX TP	カーボン抵抗		
R518	**HF457470**	CARBON RESISTOR	47.0K 1/4 J AX TP	カーボン抵抗		
R519	**HF455100**	CARBON RESISTOR	100.0 1/4 J AX TP	カーボン抵抗		
R520	**HF455100**	CARBON RESISTOR	100.0 1/4 J AX TP	カーボン抵抗		
R521	**HF456270**	CARBON RESISTOR	2.7K 1/4 J AX TP	カーボン抵抗		
R523	**HF45727R**	CARBON RESISTOR	27.0K 1/4 J AX TP	カーボン抵抗		
TR301	**WZ853400**	TRANSISTOR	KTA1266-GR-AT/P GR	トランジスタ　２ＳＡ		
TR302	**WZ853400**	TRANSISTOR	KTA1266-GR-AT/P GR	トランジスタ　２ＳＡ		
TR501	**V2797700**	TRANSISTOR	2SC5395-T112-E/F	トランジスタ　２ＳＣ	PSWO	
TR501	**WC398400**	TRANSISTOR	2N5551C-AT/P	トランジスタ		

*：New Parts(新規部品)

PN2,61L-MK,61H-MK,PB

REF NO.	PART NO.	DESCRIPTION		部品名	REMARKS	QTY
*	**ZT178800**	CIRCUIT BOARD	PN2	ＰＮ２シート	(YH565B0)(ZT17870)	
LD201	**ZR960000**	LED	HFR803029P(P5D2)-B	ＬＥＤ		
LD202	**ZR960000**	LED	HFR803029P(P5D2)-B	ＬＥＤ		
LD203	**ZR960000**	LED	HFR803029P(P5D2)-B	ＬＥＤ		
LD204	**ZR960000**	LED	HFR803029P(P5D2)-B	ＬＥＤ		
LD205	**ZR960000**	LED	HFR803029P(P5D2)-B	ＬＥＤ		
LD206	**ZR960000**	LED	HFR803029P(P5D2)-B	ＬＥＤ		
LD207	**ZR960000**	LED	HFR803029P(P5D2)-B	ＬＥＤ		
LD208	**ZR960000**	LED	HFR803029P(P5D2)-B	ＬＥＤ		
LD209	**ZR960000**	LED	HFR803029P(P5D2)-B	ＬＥＤ		
LD210	**ZR960000**	LED	HFR803029P(P5D2)-B	ＬＥＤ		
LD211	**ZR960000**	LED	HFR803029P(P5D2)-B	ＬＥＤ		
LD212	**ZR960000**	LED	HFR803029P(P5D2)-B	ＬＥＤ		
LD214	**ZR960000**	LED	HFR803029P(P5D2)-B	ＬＥＤ		
LD215	**ZR960000**	LED	HFR803029P(P5D2)-B	ＬＥＤ		
LD216	**ZR960000**	LED	HFR803029P(P5D2)-B	ＬＥＤ		
LD217	**ZR960000**	LED	HFR803029P(P5D2)-B	ＬＥＤ		
SW201	**WG31840R**	TACT SWITCH	SKRGAMD010	タクトＳＷ		
SW202	**WG31840R**	TACT SWITCH	SKRGAMD010	タクトＳＷ		
SW203	**WG31840R**	TACT SWITCH	SKRGAMD010	タクトＳＷ		
SW204	**WG31840R**	TACT SWITCH	SKRGAMD010	タクトＳＷ		
SW205	**WG31840R**	TACT SWITCH	SKRGAMD010	タクトＳＷ		
SW206	**WG31840R**	TACT SWITCH	SKRGAMD010	タクトＳＷ		
SW207	**WG31840R**	TACT SWITCH	SKRGAMD010	タクトＳＷ		
SW208	**WG31840R**	TACT SWITCH	SKRGAMD010	タクトＳＷ		
SW209	**WG31840R**	TACT SWITCH	SKRGAMD010	タクトＳＷ		
SW210	**WG31840R**	TACT SWITCH	SKRGAMD010	タクトＳＷ		
SW211	**WG31840R**	TACT SWITCH	SKRGAMD010	タクトＳＷ		
SW212	**WG31840R**	TACT SWITCH	SKRGAMD010	タクトＳＷ		
SW213	**WG31840R**	TACT SWITCH	SKRGAMD010	タクトＳＷ		
SW214	**WG31840R**	TACT SWITCH	SKRGAMD010	タクトＳＷ		
SW215	**WG31840R**	TACT SWITCH	SKRGAMD010	タクトＳＷ		
SW216	**WG31840R**	TACT SWITCH	SKRGAMD010	タクトＳＷ		
SW217	**WG31840R**	TACT SWITCH	SKRGAMD010	タクトＳＷ		
D201	**WC398800**	DIODE	KDS160-RTK/P TP	ダイオード		
-205	**WC398800**	DIODE	KDS160-RTK/P TP	ダイオード		
TR201	**WB10730R**	TRANSISTOR (ARRAY)	IMH10A T110	トランジスタアレイ		
-204	**WB10730R**	TRANSISTOR (ARRAY)	IMH10A T110	トランジスタアレイ		
	V869530R	CIRCUIT BOARD	61L-MK 16N2M	６１Ｌシート	(X2336C0)(V869520)	
D001	**WP977700**	DIODE	HSS4148TA-E Q TE-	ダイオード		
-72	**WP977700**	DIODE	HSS4148TA-E Q TE-	ダイオード		
	V869550R	CIRCUIT BOARD	61H-MK 16N2M	６１Ｈシート	(X2335D0)(V869540)	
D073	**WP977700**	DIODE	HSS4148TA-E Q TE-	ダイオード		
-122	**WP977700**	DIODE	HSS4148TA-E Q TE-	ダイオード		
	WE35540R	CIRCUIT BOARD	PB	ＰＢシート	(X5067A0)(WE35530)	
CN001	**VI878100**	CONNECTOR	51048 3P TE	ケーブルホルダー		
CN001	**VZ34160R**	CONNECTOR	51048 3P TE	ケーブルホルダー天津		
VR001	**VZ486301**	VR ROTARY	B10K EVJ05DF20B14	ロータリーＶＲ		
WH001	**--**	WIRING ASSEMBLY	PB 3P L=540	ＰＢ束線	(WE35500)	
WH001	**--**	WIRING ASSEMBLY	PB 3P L=540	ＰＢ束線	(WE35501)	
	ZM585200	ADAPTER SET	PA-130B E	アダプターセットＴＹ	E	
	YD136A00	LOUD SPEAKER	12.0CM 4OHM 3W	スピーカ		2
	ZN362500	LCD DISPLAY	TTR2A2733	液晶ディスプレイ		

＊: New Parts(新規部品)

■ PSR-A350 OVERALL CIRCUIT DIAGRAM (DMLCD, AM, MVR, PN1, PN2, PB, 61H-MK, 61L-MK)

DMLCD

LCD DRIVER

SDRAM 16M

BACKUP FLASH ROM 16M

RESET

PROG/WAVE FLASH ROM 128M

CPU (SWL01U)

USB To Host

SUSTAIN

AUX IN

OP AMP (AUX IN)

ADC

DAC

REGULATOR +3.3V

REGULATOR +1.8V

28CC1-2001111920 ⚠3

PB

PITCH BEND

28CC1-8830820

PN1

SPEAKER R

28CC1-2001160164 ⚠1

PN2

28CC1-2001160165

AM

POWER AMP 5.0W 2CH

SPEAKER L

PHONES/OUTPUT

MVR

28CC1-2001160164 ⚠1

REGULATOR +5V

BATTERY 1.5V×6

DC IN 12V

AC ADAPTOR PA-3C(J) PA-130(U) PA-130B (E, R, K, BRA, A, CHN)

to BACK-LIGHT ASSEMBLY

28CC1-2001160164 ⚠1

61H-MK (C4–C6)

28CC1-8822437

61L-MK (C1–B3)

28CC1-8822436

■ WARNING
Components having special characteristics are marked ⚠ and must be replaced with parts having specification equal to those originally installed.

XX : Not installed

[ ] : The parts which are surrounded by dotted line are No mount.

Note : See parts list for details of circuit board component parts.