PORTATONE

PSR-530

SERVICE MANUAL

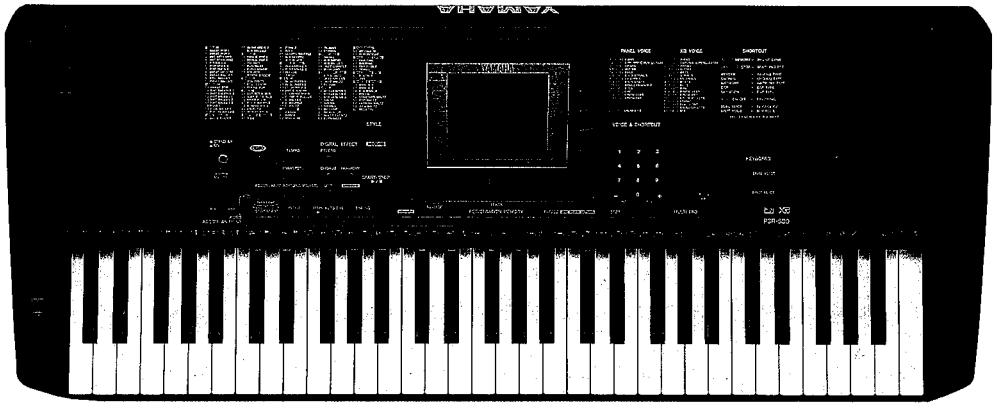

■ **CONTENTS** (目次)

BLOCK DIAGRAM (ブロックダイアグラム)..... 2
CIRCUT BOARD LAYOUT (ユニットレイアウト) 4
DISASSEMBLY PROCEDURE (分解手順)..... 7
LSI PIN DESCRIPTION (LSI端子機能表) 12
IC BLOCK DIAGRAM (ICブロック図) 14
CIRCUIT BOARDS (シート基板図) 15
TEST PROGRAM (テストプログラム) 25/28
INITIALIZE (初期化) 27/30
SPECIFICATIONS (総合仕様) 31/36
PANEL LAYOUT (パネルレイアウト)..... 32/34
MIDI DATA FORMAT..... 37
MIDI IMPLEMENTATION CHART 49
PARTS LIST
OVERALL CIRCUIT DIAGRAM (総回路図)

PK 001590

YAMAHA CORP.
HAMAMATSU, JAPAN
2.4K-015 Printed in Japan '97.07

IMPORTANT NOTICE

This manual has been provided for the use of authorized Yamaha Retailers and their service personnel. It has been assumed that basic service procedures inherent to the industry, and more specifically Yamaha Products, are already known and understood by the users, and have therefore not been restated.

WARNING: Failure to follow appropriate service and safety procedures when servicing this product may result in personal injury, destruction of expensive components and failure of the product to perform as specified. For these reasons, we advise all Yamaha product owners that all service required should be performed by an authorized Yamaha Retailer or the appointed service representative.

IMPORTANT: This presentation or sale of this manual to any individual or firm does not constitute authorization, certification, recognition of any applicable technical capabilities, or establish a principal-agent relationship of any form.

The data provided is belived to be accurate and applicable to the unit(s) indicated on the cover. The research engineering, and service departments of Yamaha are continually striving to improve Yamaha products. Modifications are, therefore, inevitable and changes in specification are subject to change without notice or obligation to retrofit. Should any discrepancy appear to exist, please contact the distributor's Service Division.

WARNING: Static discharges can destroy expensive components. Discharge any static electricity you body may have accumulated by grounding yourself to the ground buss in the unit (heavy gauge black wires connect to this buss.)

IMPORTANT: Turn the unit OFF during disassembly and parts replacement. Recheck all work before you apply power to the unit.

WARNING: CHEMICAL CONTENT NOTICE!

The solder used in the production of this product contains LEAD. In addition, other electrical/electronic and/or plastic (where applicable) components may also contain traces of chemicals found by the California Health and Welfare Agency (and possibly other entities) to cause cancer and/or birth defects or other reproductive harm.

DO NOT PLACE SOLDER, ELECTRICAL/ELECTRONIC OR PLASTIC COMPONENTS IN YOUR MOUTH FOR ANY REASON WHAT SO EVER!

Avoid prolonged, unprotected contact between solder and your skin! When soldering, do not inhale solder fumes or expose eyes to solder/flux vapor!

If you come in contact with solder or components located inside the enclosure of this product, wash your hands before handling food.

PSR-530

■ BLOCK DIAGRAM (ブロックダイアグラム)

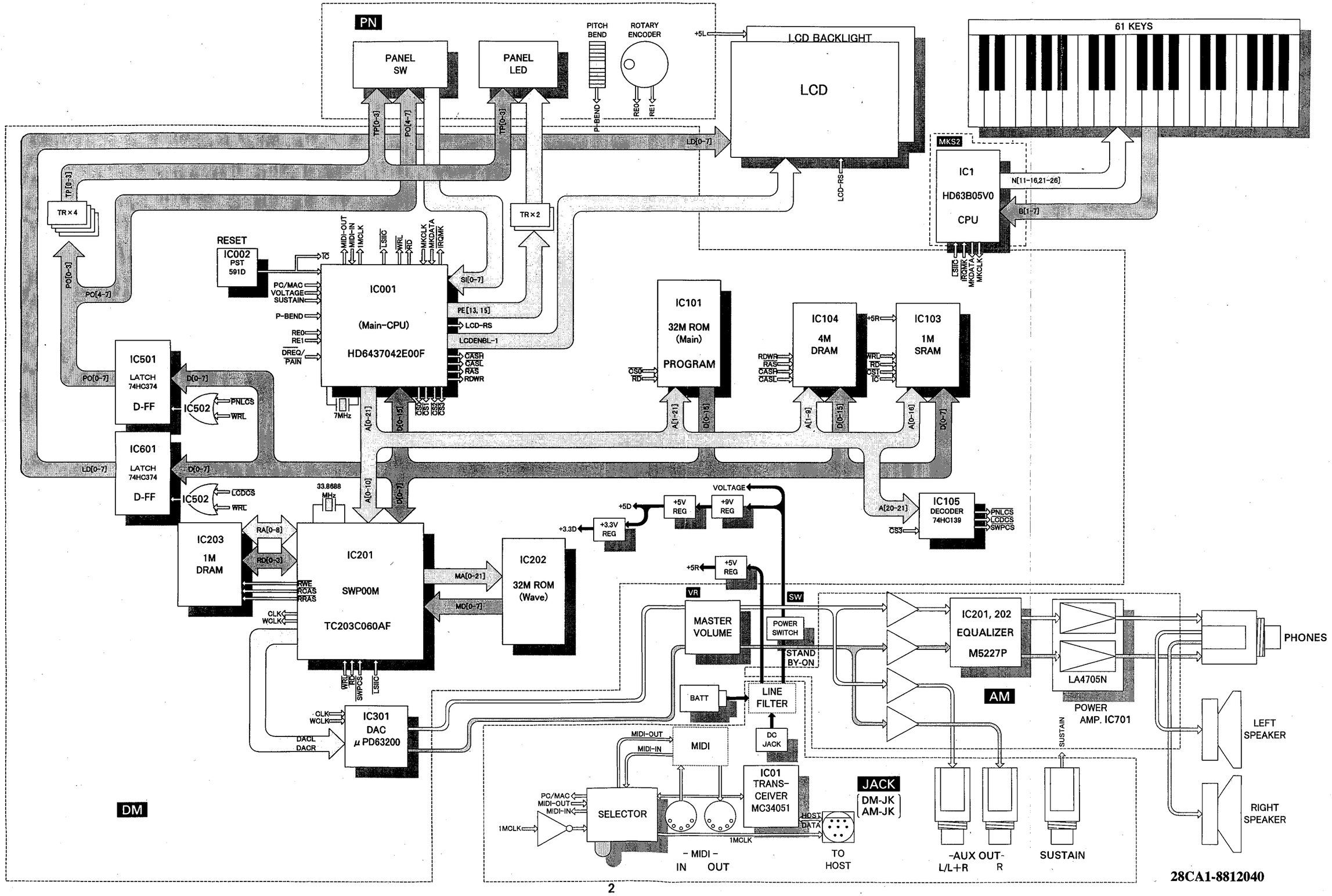

■ CIRCUIT BOARD LAYOUT (ユニットレイアウト)

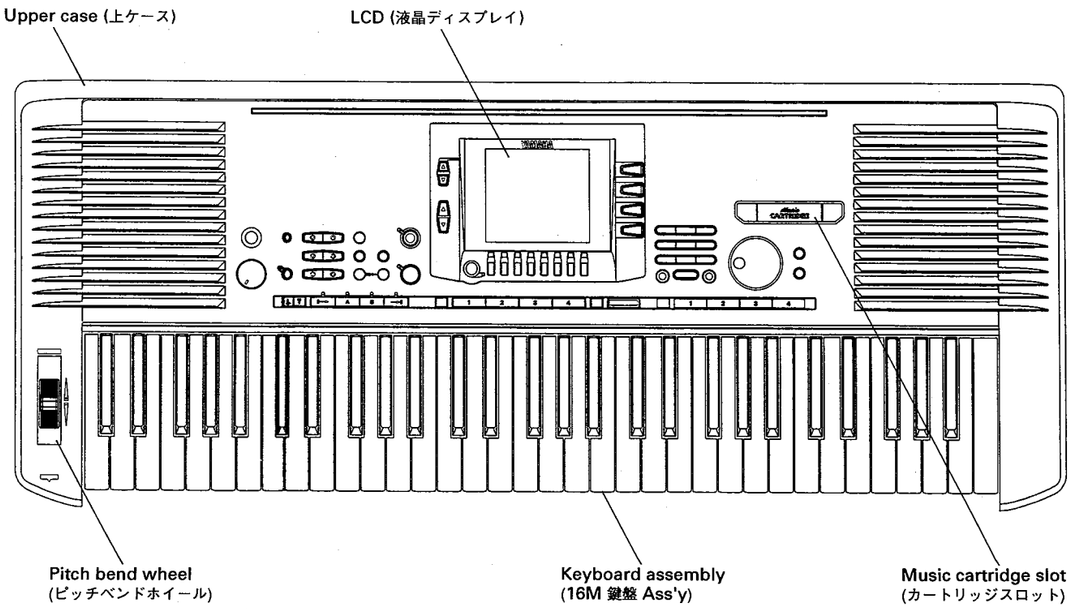

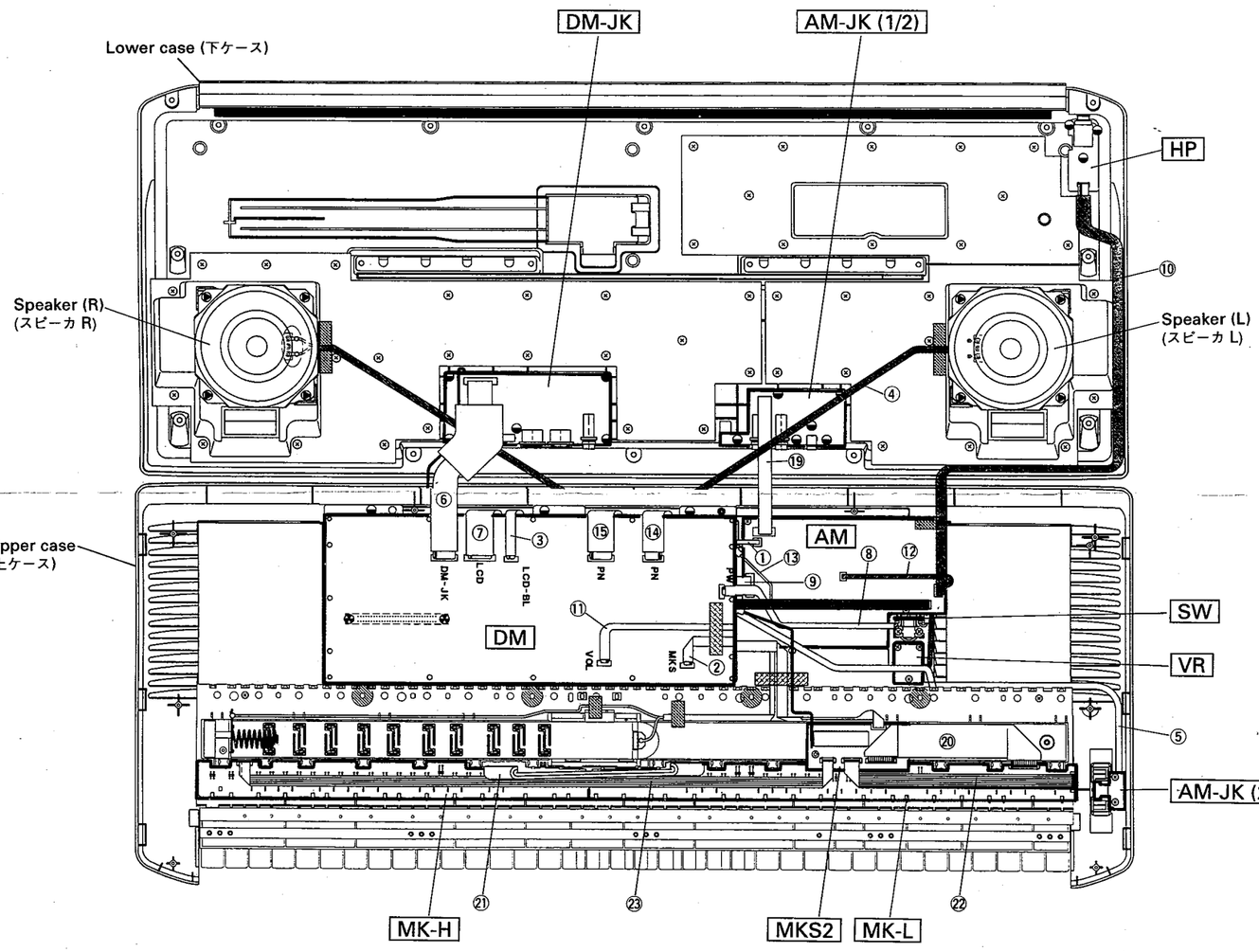

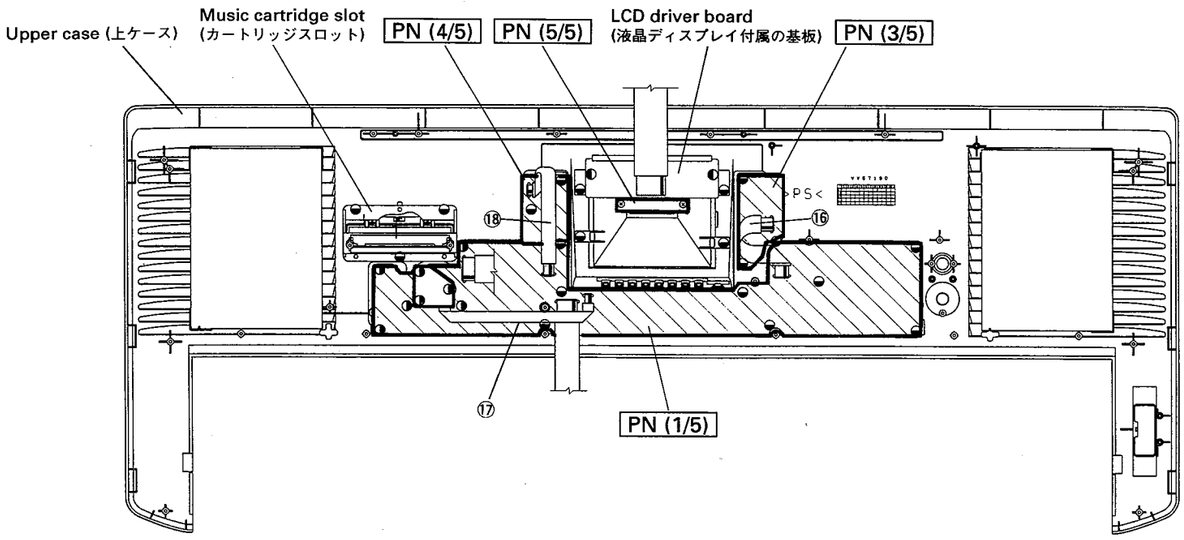

• WIRING

REF. NO.	DESTINATION		CONNECTOR ASSEMBLY	REMARKS	PART NO.	AVAILA-BILITY
①	AM-CN701	Battery	BATT-AM	2P/L360/800	VY85160	×
②	DM-CN802	MKS2-CN1	DM-MK	6P/L450	VZ60620	×
③	DM-CN602	LCD	DM-LCD2	2P/L230	VY85100	×
④	AM-CN702	Speaker(L),(R)	SP-L/R	4P	VZ16230	×
⑤	PN(1/5)-CN102	AM.JK(2/2)-CN102	PN-PB	3P/L600	VY85120	×
⑥	DM-CN801	DM.JK-CN01	DM-DM.JK	8P/L240	VY85110	×
⑦	DM-CN601	LCD	DM-LCD1	13P/L250	VY85090	×
⑧	DM-CN701	SW-CN708	DM-SW	5P/L250	VY85020	×
⑨	AM-CN704	SW-CN707	AM-SW	10P/L300	VY85040	×
⑩	AM-CN705	HP-CN706	AM-HP	5P/L600	VY85030	×
⑪	DM-CN301	VR-CN303	DM-VR	4P/L360	VY85190	×
⑫	AM-CN301	VR-CN302	AM-VR	5P/L250	VY85200	×
⑬	DM	AM-Earth	AM-DM EARTH	1P/L120	VY85210	×
⑭	DM-CN502	PN(1/5)-CN100	DM-PN1	13P/L350	VY85070	×
⑮	DM-CN501	PN(1/5)-CN101	DM-PN2	10P/L310	VY85080	×
⑯	PN(1/5)-CN105	PN(3/5)-CN106	PN1	5P/L170	VY85130	×
⑰	PN(1/5)-CN103	PN(2/5)-CN104	PN2	3P/L210	VY85140	×
⑱	PN(1/5)-CN107	PN(4/5)-CN108	PN3	4P/L120	VY85150	×
⑲	AM-CN709	AM.JK(1/2)-CN101	AM-AM.JK	9P/L250	VY85050	×
⑳	MKS2-CN2	MK-L		12P/L190	VU95890	○
㉑	MK-H	MK-L		12P/L215	VU65950	○
㉒	MKS2-CN3	MK-L		7P/L250	VU65940	○
㉓	MKS2-CN4	MK-H		5P/L615	VU65960	○

NOTE : REF. NO. is indicated in the CIRCUIT BOARD LAYOUT figures in page 4 and page 5.
Parts No.1-19 are not available as spare parts, and parts No.20-23 are available as spare parts.

■ DISASSEMBLY PROCEDURE (分解手順)

1 Lower Case Assembly

1-1 Remove the battery cover assembly.

1-2 remove the five (5) screws marked [410], four (4) screws marked [200A] and nine (9) screws marked [220A], then the lower case assembly can be removed. (Fig. 1)

1 下ケース Ass'y

1-1 バッテリーカバーAss'y を外します。（図 1）

1-2 [410]のネジ 5 本と[200A]のネジ 4 本と[220A]のネジ 9 本を外し、下ケース Ass'y を外します。（図 1）

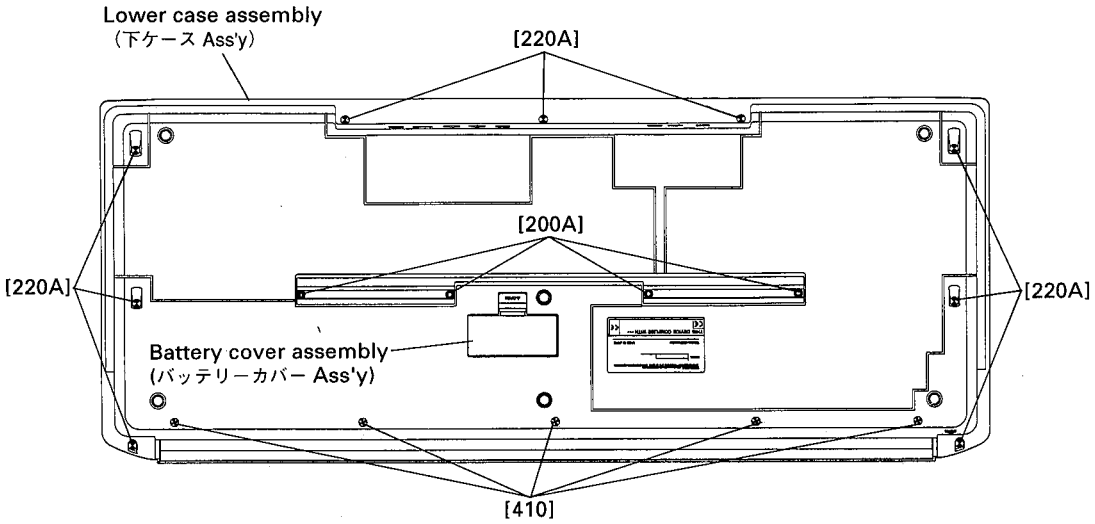

[410]: Bind Head Tapping Screw-P 3.0X10 MFZN2Y (EP600270) ＋バインドPタイト
[200]: Bind Head Tapping Screw-P 3.0X25 MFZN2Y (VK228100) ＋バインドPタイト
[220]: Bind Head Tapping Screw-P 3.0X12 MFZN2Y (EP600300) ＋バインドPタイト

(Fig. 1)

2 DM Circuit Board

2-1 Remove the lower case assembly. (See procedure 1)

2-2 Remove the two (2) screws marked [180B], nine (9) screws marked [210A], one (1) screw marked [220B] and remove the shield case (lower). (Fig. 2)

2-3 Remove the five (5) screws marked [210B], two (2) screws marked [190], then the DM circuit board can be removed. (Fig. 2 and Fig. 3)

2 DM シート

2-1 下ケース Ass'y を外します。（1 項参照）

2-2 [180B]のネジ 2 本と[210A]のネジ 9 本と[220B]のネジ 1 本を外し、シールドケース下を外します。（図 2）

2-3 [210B]のネジ 5 本と[190]のネジ 2 本を外し、DM シートを外します。（図 2、図 3）

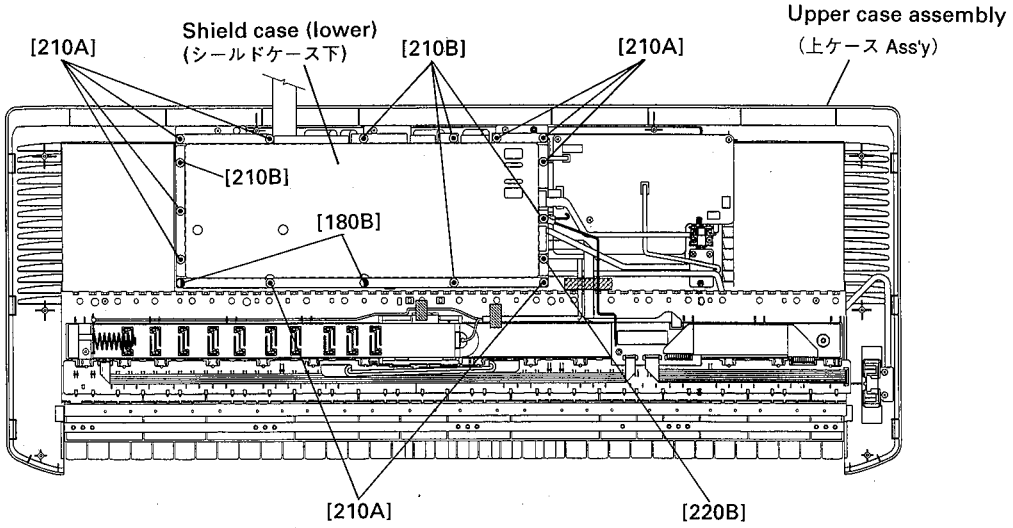

[180]: Bind Head Tapping Screw-P 3.0X8 MFZN2Y (EP600280) ＋バインドPタイト
[210]: Bind Head Tapping Screw-B 3.0X8 MFZN2BL (EP600190) ＋バインドBタイト
[220]: Bind Head Tapping Screw-P 3.0X12 MFZN2Y (EP600300) ＋バインドPタイト

(Fig. 2)

3 Keyboard Assembly

3-1 Remove the lower case assembly. (See procedure 1)
3-2 Remove the two (2) screws marked [200B], then the keyboard assembly can be removed. (Fig. 3)

3 鍵盤 Ass'y

3-1 下ケース Ass'y を外します。（1 項参照）
3-2 [200B]のネジ 2 本を外し鍵盤 Ass'y を外します。（図 3）

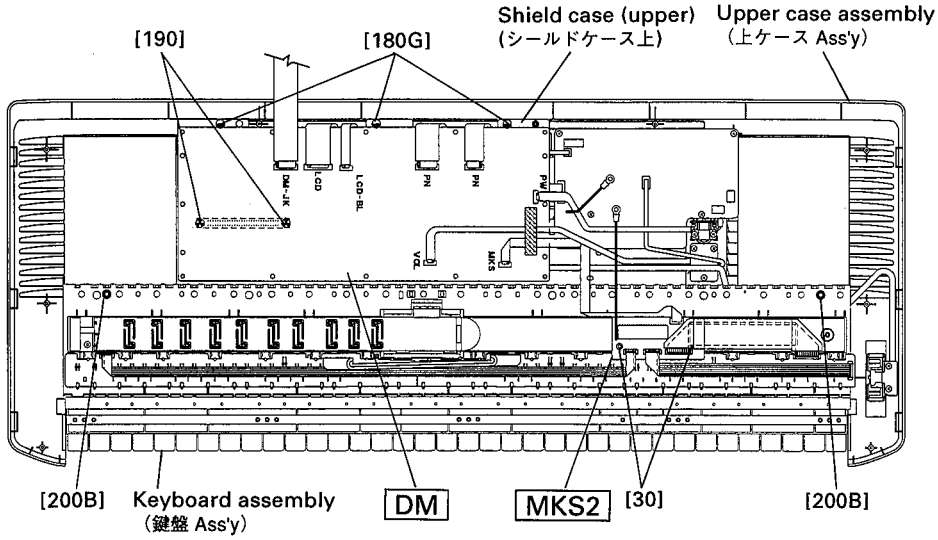

[30]: Bind Head Tapping Screw-P 3.0X8 MFZN2BL (EP630220) ＋バインド P タイト
[180]: Bind Head Tapping Screw-P 3.0X8 MFZN2Y (EP600280) ＋バインド P タイト
[190]: Bind Head Tapping Screw-P 3.0X16 MFZN2Y (EP600310) ＋バインド P タイト
[200]: Bind Head Tapping Screw-P 3.0X25 MFZN2Y (VK228100) ＋バインド P タイト

(Fig. 3)

4 AM Circuit Board

4-1 Remove the lower case assembly. (See procedure 1)
4-2 Remove the four (4) screws marked [180C], then the AM circuit board can be removed. (Fig. 4)

4 AM シート

4-1 下ケース Ass'y を外します。（1 項参照）
4-2 [180C]のネジ 4 本を外し、AM シートを外します。（図 4）

5 VR Circuit Board

5-1 Pull off the VOLUME control knob.
5-2 Remove the lower case assembly. (See procedure 1)
5-3 Remove the three (3) screws marked [180D], then the VR circuit board can be removed. (Fig. 4)

5 VR シート

5-1 コントロールパネル上の V ツマミを外します。
5-2 下ケース Ass'y を外します。（1 項参照）
5-3 [180D]のネジ 3 本を外し、VR シートを外します。（図 4）

6 SW Circuit Board

6-1 Remove the lower case assembly. (See procedure 1)
6-2 Remove the two (2) screws marked [180E], then the SW circuit board can be removed. (Fig. 4)
6-3 Pull off the push knob from the SW circuit board.

6 SW シート

6-1 下ケース Ass'y を外します。（1 項参照）
6-2 [180E]のネジ 2 本を外し、SW シートを外します。（図 4）
6-3 SW シートより、プッシュツマミを引き抜きます。

7 AM-JK (2/2) Circuit Board and Wheel Assembly

7-1 Remove the lower case assembly. (See procedure 1)
7-2 Remove the two (2) screws marked [180F], then the AM-JK (2/2) circuit board can be removed. (Fig. 4)
7-3 Remove the wheel assembly from the AM-JK (2/2) circuit board.

7 AM-JK(2/2) シート、ホイール Ass'y

7-1 下ケース Ass'y を外します。（1 項参照）
7-2 [180F]のネジ 2 本を外し、AM-JK(2/2) シートを外します。（図 4）
7-3 AM-JK(2/2) シートより、ホイール Ass'y を引き抜きます。

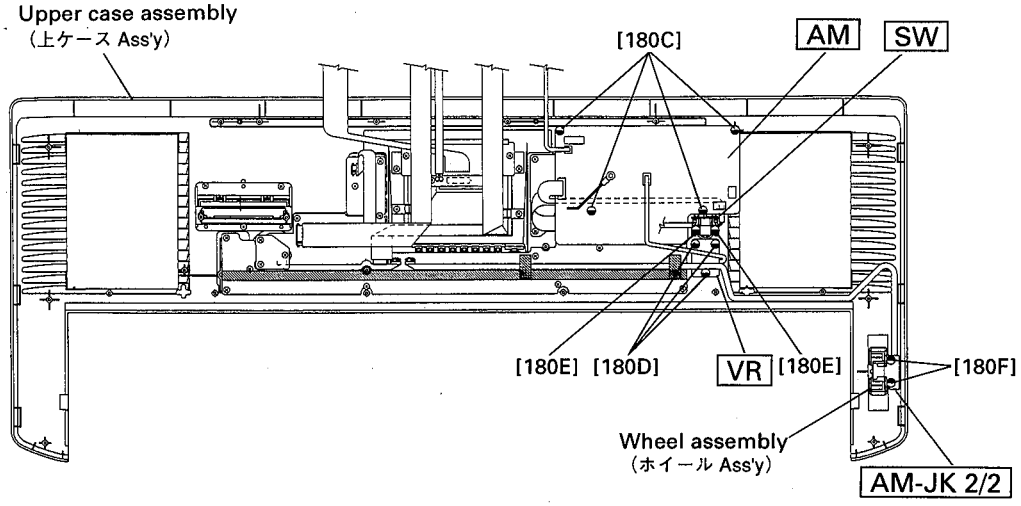

[180]: Bind Head Tapping Screw-P 3.0X8 MFZN2Y (EP600280) ＋バインドPタイト

(Fig. 4)

8 PN (1/5-5/5) Circuit Board

8-1 Remove the lower case assembly. (See procedure 1)
8-2 Remove the DM circuit board. (See procedure 2)
8-3 Remove the three (3) screws marked [180G] and then remove the shield case (upper). (Fig. 3)
8-4 Remove the AM circuit board. (See procedure 4)
8-5 Remove the keyboard assembly. (See procedure 3)
8-6 Remove the three (3) screws marked [150A], then remove the PN(2/5) circuit board with the encoder knob. (Fig. 5)
8-7 Remove the eleven (11) screws marked [150B], one (1) screw marked [150C] and one (1) screw marked [150D], then the PN(1/5) circuit board can be removed. (Fig. 5)
8-8 Remove the one screw marked [150C], two (2) screw marked [150E], then the PN(3/5) circuit board can be removed. (Fig. 5)
8-9 Remove the one screw marked [150D], two (2) screws marked [150F], then the PN(4/5) circuit board can be removed. (Fig. 5)
8-10 Remove the two (2) screws marked [150G], then the PN(5/5) circuit board can be removed. (Fig. 5)

9 LCD

9-1 Remove the lower case assembly. (See procedure 1)
9-2 Remove the DM circuit board. (See procedure 2)
9-3 Remove the three (3) screws marked [180G] and then remove the shield case (upper). (Fig. 3)
9-4 Remove the PN(5/5) circuit board. (See procedure 8-10)
9-5 Remove the two (2) screws marked [150H], four (4) screws marked [150I] and then remove the cover. After the cover has been removed, you can take the LCD out of the unit. (Fig. 5)

8 PN(1/5～5/5)シート

8-1 下ケース Ass'y を外します。（1 項参照）
8-2 DM シートを外します。（2 項参照）
8-3 [180G]のネジ 3 本を外し、シールドケース上を外します。（図 3）
8-4 AM シートを外します。（4 項参照）
8-5 鍵盤 Ass'y を外します。（3 項参照）
8-6 [150A]のネジ 3 本を外し、PN2/5 シートを外します。（図 5）
※ PN2/5 シートを外すと、コントロールパネル上のエンコーダツマミも一緒に外れます。
8-7 [150B]のネジ 11 本と[150C]のネジ 1 本と[150D]のネジ 1 本を外し、PN1/5 シートを外します。（図 5）
8-8 [150C]のネジ 1 本と[150E]のネジ 2 本を外し、PN3/5 シートを外します。（図 5）
8-9 [150D]のネジ 1 本と[150F]のネジ 2 本を外し、PN4/5 シートを外します。（図 5）
8-10 [150G]のネジ 2 本を外し、PN5/5 シートを外します。（図 5）

9 液晶ディスプレイ

9-1 下ケース Ass'y を外します。（1 項参照）
9-2 DM シートを外します。（2 項参照）
9-3 [180G]のネジ 3 本を外し、シールドケース上を外します。（図 3）
9-4 PN5/5 シートを外します。（8-10 項参照）
9-5 [150H]のネジ 2 本と、[150I]のネジ 4 本と、バックライトカバーを外し、液晶ディスプレイを外します。（図 5）

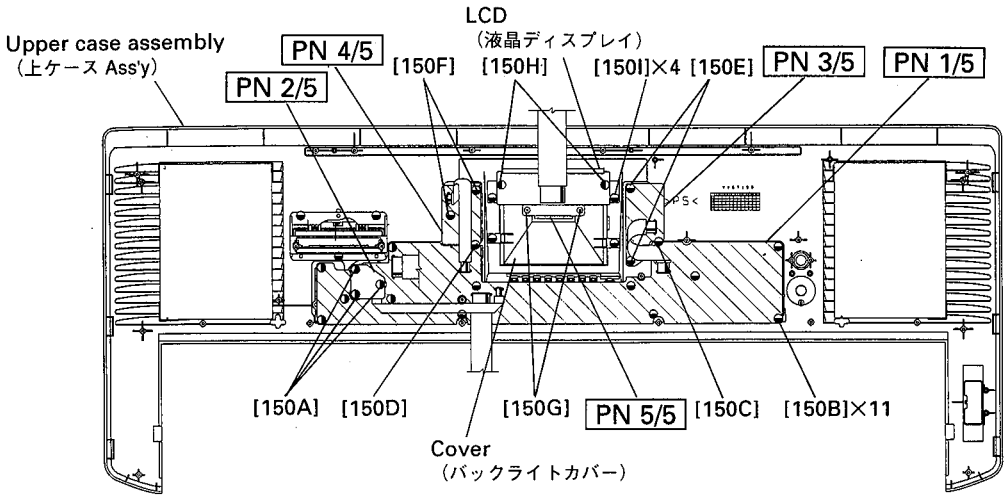

[150]: Bind Head Tapping Screw-P 3.0X8 MFZN2Y (EP600280) ＋バインドPタイト

(Fig. 5)

10 AM-JK (1/2) Circuit Board

10-1 Remove the lower case assembly. (See procedure 1)
10-2 Remove the six (6) screws marked [180H], then the AM-JK(1/2) circuit board can be removed. (Fig. 6)

11 DM-JK Circuit Board

11-1 Remove the lower case assembly. (See procedure 1)
11-2 Remove the five (5) screws marked [180I], then the DM-JK circuit board can be removed. (Fig. 6)

12 HP Circuit Board

12-1 Remove the lower case assembly. (See procedure 1)
12-2 Remove the three (3) screws marked [180J], then the HP circuit board can be removed. (Fig. 6)

13 Speakers

13-1 Remove the lower case assembly. (See procedure 1)
13-2 Remove the eight (8) screws marked [230] and then remove the left and right speakers. (Fig. 6)

10 AM-JK(1/2)シート

10-1 下ケース Ass'y を外します。（1 項参照）
10-2 [180H]のネジ 6 本を外し、AM-JK1/2 シートを外します。（図 6）

11 DM-JK シート

11-1 下ケース Ass'y を外します。（1 項参照）
11-2 [180I]のネジ 5 本を外し、DM-JK シートを外します。（図 6）

12 HP シート

12-1 下ケース Ass'y を外します。（1 項参照）
12-2 [180J]のネジ 3 本を外し、HP シートを外します。（図 6）

13 スピーカ

13-1 下ケース Ass'y を外します。（1 項参照）
13-2 [230]のネジ 8 本を外し、左右のスピーカーを外します。（図 6）

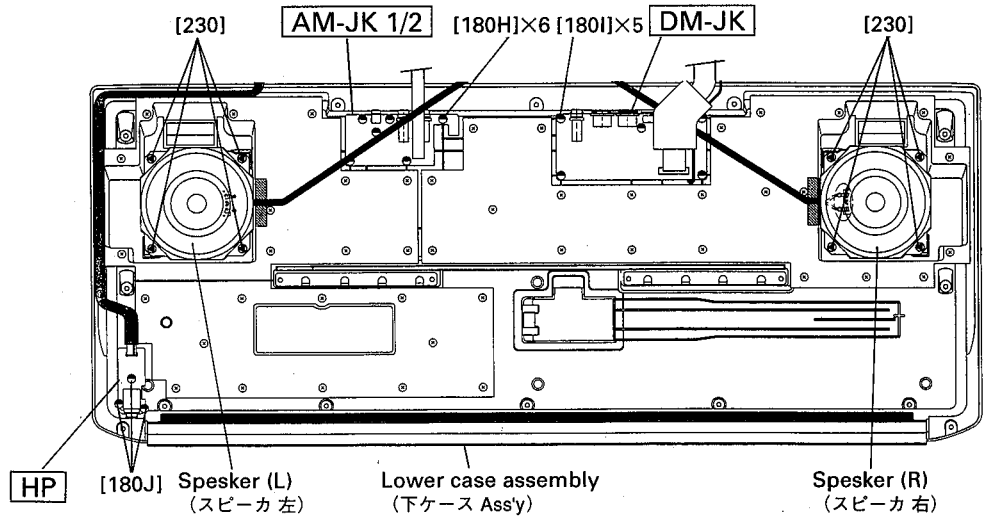

[180]: Bind Head Tapping Screw-P 3.0X8 MFZN2Y (EP600280) ＋バインドPタイト
[230]: Bind Head Tapping Screw-P 4.0X8 MFZN2BL (VB931600) ＋バインドPタイト

(Fig. 6)

14 Disassembling the keyboard assembly

14-1 Remove the keyboard assembly. (See procedure 3)

14-2 Remove the two (2) screws marked [30], then the MKS2 circuit board can be removed. (Fig. 3)

14-3 Remove the MK circuit board while pressing the fifteen (15) hooks (A) inward, and then remove the rubber contact. (Fig. 7)

14-4 Remove the twenty-one (21) screws marked as [140], then remove the black keys from the lower notes. Afterwards, remove the white keys DFA and C' and then remove the white keys CEGB from the higher notes. At this time, lift the keys from the front and slide them towards you. The keys can be removed from the assembly. (Fig. 8)

15 Assembling the keyboard assembly

15-1 Install the white keys CEGB from the lower notes, and then DFA keys and C' key. Afterwards install the back keys from the higher notes, and tighten the twenty-one (21) screws marked [140]. (Fig. 8)

15-2 Install the rubber contacts in the assembly while pressing the keys as shown in Figure 9. Check that the rubber contact has been firmly placed into position in the area indicated by the arrow in Figure 10.

※ When fitting the rubber contacts, raise both ends of the frame so that keys do not push the rubber contact up. Install the MK circuit board in the assembly so that the hooks (B) hold it as shown in Figure 11.

14. 鍵盤 Ass'y の分解

14-1 鍵盤 Ass'y を外します。（3 項参照）

14-2 [30]のネジ 2 本を外し、MKS2 シートを外します。（図 3）

14-3 MK シートを止めているフック A 15 個を矢印の方向に押し外して MK シートを取り外します。接点ゴムは、上へ引くと外れます。（図 7）

14-4 白鍵と黒鍵を止めている[140]のネジ 21 本を外し黒鍵を音程の低い方から外します。
次に白鍵 DFA と白鍵 C'を外し、最後に白鍵 CEGB を音程の高い方から外します。このとき、鍵盤の手前を持ち上げ、手前にスライドさせて取り外して下さい。（図 8）

15. 鍵盤 Ass'y の組立て

15-1 白鍵 CEGB を音程の低い方からはめ込みます。
白鍵 DFA と白鍵 C'をはめ込みます。
黒鍵を音程の高い方からはめ込みます。
白鍵、黒鍵を止めていた[140]のネジ 21 本を取付けます。（図 8）

15-2 接点ゴムは、図 9 のように鍵盤を押し上げながら図 10 のようにしっかりとはめ込んで下さい。
このとき、鍵盤が接点ゴムを押し上げて、接点ゴムが浮かないように、MK フレームの両端を上げて作業を行って下さい。
MK シートは、図 11 のようにフック B にはめ込んで取り付けます。（図 9、図 10、図 11）

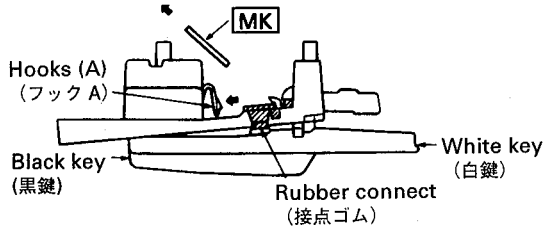

(Fig. 7)

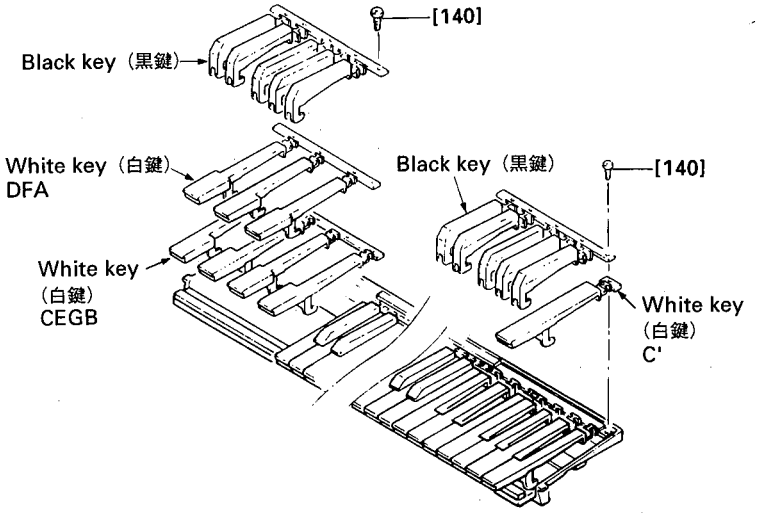

[140]: Bind Head Tapping Screw-P 3.0X16 MFZN2BL (VB205200) ＋バインドPタイト or
[140]: Bind Head Tapping Screw-P 3.0X16 MFZN2BL (VS756700) ＋バインドPタイト

(Fig. 8)

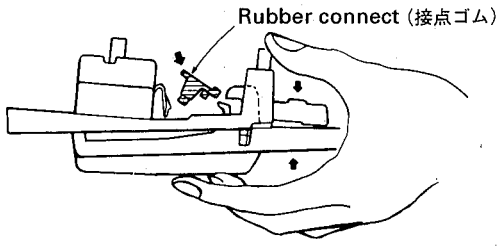

(Fig. 9)

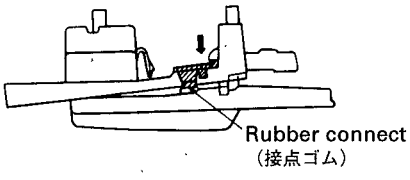

(Fig. 10)

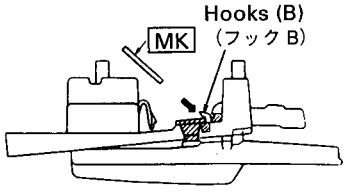

(Fig. 11)

■ LSI PIN DESCRIPTION (LSI端子機能表)

• HD6437042E00F (XT125A00) CPU

PIN NO.	NAME	I/O	FUNCTION	PIN NO.	NAME	I/O	FUNCTION
1	PE14	I/O	Port E	57	D11	I/O	Data bus
2	PE15	I/O	Port E	58	D10	I/O	
3	Vss		Ground	59	D9	I/O	
4	A0	I/O	Address bus	60	D8	I/O	
5	A1	I/O		61	Vss		Ground
6	A2	I/O		62	D7	I/O	Data bus
7	A3	I/O		63	D6	I/O	
8	A4	I/O		64	D5	I/O	
9	A5	I/O		65	Vcc		+5D
10	A6	I/O		66	D4	I/O	Data bus
11	A7	I/O		67	D3	I/O	
12	A8	I/O		68	D2	I/O	
13	A9	I/O		69	D1	I/O	
14	A10	I/O		70	D0	I/O	
15	A11	I/O		71	Vss		Ground
16	A12	I/O		72	XTAL	I	Clock
17	A13	I/O		73	MD3		+5D
18	A14	I/O		74	EXTAL	I	Clock
19	A15	I/O		75	MD2		Ground
20	A16	I/O		76	NMI		Ground
21	Vcc		+5D	77	Vcc		+5D
22	A17	I/O	Address bus	78	MD1		Ground
23	Vss		Ground	79	MD0		+5D
24	PB2	I/O	Port B	80	PLLVcc		+5D
25	PB3	I/O		81	PLLCAP	I	PLL CAPA
26	PB4	I/O		82	PLLVss	I	PLL GND
27	Vss		Ground	83	PA15		Test point 004-1 (Ground)
28	PB5	I/O	Port B	84	/RES	I	Reset
29	A18	I/O	Address bus	85	PE0	I/O	Port E
30	A19	I/O		86	PE1	I/O	
31	A20	I/O		87	PE2	I/O	
32	A21	I/O		88	PE3		Test point 005-1 (Ground)
33	Vss		Ground	89	PE4	I/O	Port E
34	/RD	I/O	Read S	90	Vss		Ground
35	/WDTOVF	I/O	NC	91	AN0	I	Port F/Analog in
36	/WRH	I/O	Write S	92	AN1	I	
37	Vss		Ground	93	AN2	I	
38	/WRL	I/O	Write S	94	AN3		Test point 006-1 (Ground)
39	Vss		Ground	95	PF4	I	Port F/Analog in
40	/CS1	I/O	CS (PSRAM)	96	PF5	I	Port F/Analog in
41	/CS0	I/O	CS (M ROM)	97	AVss		Ground
42	PA9	I/O	Port A	98	PF6	I	Port F/Analog in
43	PA8	I/O	Port A	99	PF7	I	Port F/Analog in
44	/CS3	I/O	CS (SWP00)	100	Vcc		+5D
45	/CS2	I/O	CS (M. C)	101	Vss		Ground
46	/DREQ0		Ground	102	PE5	I/O	Port E
47	TXD1	I/O	T data (MK)	103	Vcc		+5D
48	RXD1	I/O	R data (MK)	104	PE6	I/O	Port E
49	/IRQ0	I/O	Ground	105	PE7	I/O	
50	TXD0	I/O	T data (MIDI)	106	PE8	I/O	
51	RXD0	I/O	R data (MIDI)	107	PE9	I/O	
52	D15	I/O	Data bus	108	PE10	I/O	
53	D14	I/O		109	Vss		Ground
54	D13	I/O		110	PE11	I/O	Port E
55	Vss		Ground	111	PE12	I/O	
56	D12	I/O	Data bus	112	PE13	I/O	

• TC203C060AF-001 (XS724A00) SWP00M (AWM Tone Generator) Standard Wave Processor

PIN NO.	NAME	I/O	FUNCTION	PIN NO.	NAME	I/O	FUNCTION
1	Vss		Ground	51	MD2	I	Wave memory data bus
2	/IC	I	Initial clear	52	MD6	I	
3	/CS	I	Chip select	53	MD1	I	
4	/WR	I	Write strobe	54	MD7	I	
5	Vdd		DC +3.3V supply	55	Vdd		DC +3.3V supply
6	/RD	I	Read control	56	MD0	I	Wave memory data bus
7	CA10	I	CPU address bus	57	MA0	O	Wave memory address bus
8	CA9	I		58	MA17	O	
9	CA8	I		59	MA1	O	
10	CA7	I		60	MA16	O	
11	CA6	I		61	MA2	O	
12	CA5	I		62	MA15	O	
13	CA4	I		63	MA3	O	
14	CA3	I		64	MA14	O	
15	Vss		Ground	65	MA4	O	
16	CA2	I	CPU address bus	66	Vss		Ground
17	CA1	I		67	MA13	O	Wave memory address bus
18	CA0	I		68	MA5	O	
19	CD7	I/O	CPU data bus	69	MA12	O	
20	CD6	I/O		70	MA6	O	
21	CD5	I/O		71	MA11	O	
22	CD4	I/O		72	MA7	O	
23	CD3	I/O		73	MA10	O	
24	CD2	I/O		74	Vss		Ground
25	CD1	I/O		75	MA8	O	Wave memory address bus
26	CD0	I/O		76	MA9	O	
27	RA8	O	DRAM address bus	77	MA18	O	
28	RA7	O		78	MA20	O	
29	RA6	O		79	MA19	O	
30	VddS		DC +5V supply	80	VddS		DC +5V supply
31	RA5	O	DRAM address bus	81	MA21	O	Wave memory address bus
32	VSS		Ground	82	MA22	O	
33	RA4	O	DRAM address bus	83	MA23	O	
34	RA3	O		84	DACLR	O	DAC output (L or L/R)
35	RA2	O		85	DACR	O	DAC output R
36	RA1	O		86	BCLK	O	Bit clock
37	RA0	O		87	WCLK	O	Word clock
38	/RAS	O	Row address strobe	88	SYSCLK	O	System clock
39	/RWE	O	DRAM write enable	89	NSYSON	I	NSYS expansion enable
40	Vss		Ground	90	Vss		Ground
41	VddS		DC +5V supply	91	Vdd		DC +3.3V supply
42	RD3	I/O	DRAM data bus	92	TESTON	I	Test pin
43	RD2	I/O		93	ACIN	I	
44	RD1	I/O		94	DCTEST	I	
45	RD0	I/O		95	SYI	I	Synch. signal
46	/CAS	O	Column address strobe	96	MCLK1	I	Master clock input
47	MD4	I	Wave memory data bus	97	MCLK0	O	Master clock output
48	Vss		Ground	98	Vss		Ground
49	MD3	I	Wave memory data bus	99	XOUT	O	Crystal oscillator
50	MD5	I	Wave memory data bus	100	XIN	I	Crystal oscillator

• μPD63200GS (XM145A00) DAC (Digital to Analog Converter)

PIN NO.	NAME	I/O	FUNCTION	PIN NO.	NAME	I/O	FUNCTION
1	4/8FS	I	4/8 Fs selection	9	R. REF		Channel R voltage reference
2	D. GND		Digital ground	10	L. REF		Channel L voltage reference
3	16/18 BIT	I	16 bit/18 bit selection	11	L. OUT	O	Channel L output
4	D. VDD		Digital power supply	12	A. GND		Analog ground
5	A. GND		Analog ground	13	LRCK/WD	I	Word clock
6	R. OUT	O	Channel R output	14	LR/RSI	I	Channel R series input
7	A. VDD		Analog power supply	15	LSI	I	Channel L series input
8	A. VDD		Analog power supply	16	CLK	I	Clock

● HD63B05V0F073P (XR951A00) CPU

PIN NO.	NAME	I/O	FUNCTION	PIN NO.	NAME	I/O	FUNCTION
1	/RES	I	Reset	21	C7	I/O	
2	/INT	I	Interrupt request	22	C6	I/O	
3	NUM	I	Non-maskable interrupt	23	C5	I/O	
4	A7	I/O		24	C4	I/O	Port C
5	A6	I/O		25	C3	I/O	
6	A5	I/O		26	C2	I/O	
7	A4	I/O	Port A	27	C1	I/O	
8	A3	I/O		28	C0	I/O	
9	A2	I/O		29	D0	I/O	
10	A1	I/O		30	D1	I/O	Port D
11	A0	I/O		31	D2	I/O	
12	B0	I/O		32	D3/TX	O	Serial data output
13	B1	I/O		33	D4/RX	I	Serial data input
14	B2	I/O		34	D5//CK	O	Clock for serial operation
15	B3	I/O	Port B	35	D6//INT2	I	Interrupt request 2
16	B4	I/O		36	/STBY	I	Standby mode signal
17	B5	I/O		37	TIMER	I	Timer
18	B6	I/O		38	XTAL	O	Clock
19	B7	I/O		39	EXTAL	I	Clock
20	VSS		Ground	40	VCC		Power supply

■ IC BLOCK DIAGRAM (ICブロック図)

- **M5227P** (XF751A00)
  5-Band Graphic Equalizer

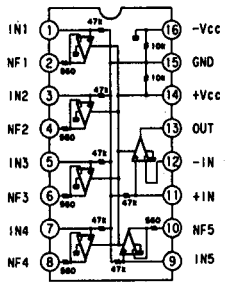

- **MC34051P** (XP094A00)
  Dual EIA-422/423 Transceiver

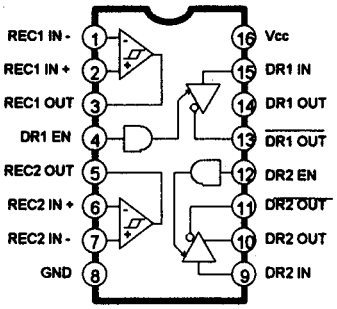

- **TC74AC32P** (XG658A00)
  Quad 2 Input OR

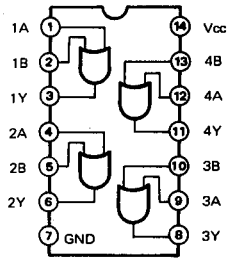

- **TC74AC139P** (XL123A00)
  Dual 2 to 4 Demultiplexer

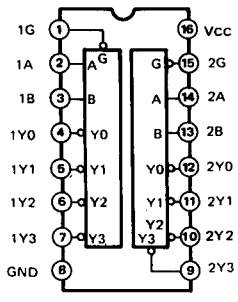

- **TC74HC374AP** (IR037400)
  Octal 3-State D-Type Flip-Flop

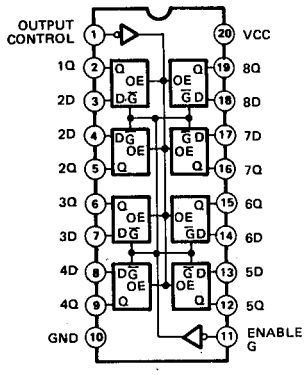

- **µPC4570HA** (XB247A00)
  Dual Operational Amplifier

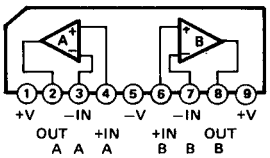

■ SPECIFICATIONS

Keyboards
- 61 standard-size keys (C1 — C6) with touch response.

Display
- Large multi-function LCD display

Setup
- Stand by/ON
- Master Volume : MIN — MAX

Control & Number Buttons
- MENU ▲▼, VOICE, STYLE, SONG, CARTRIDGE, SUB MENU ▲▼, [1] — [0], [+] (YES), [–] (NO)

Cartridge Slot

Demo
- 12 Songs

Voice
- 200 Panel Voices +12 Drum Kits + 480 XG Voices
- Polyphony : 32
- Voice Set
- R1/R2/L Voices
- Revoice : Volume, Octave, Pan, Reverb Send Level, Chorus Send Level, DSP Send Level
- Split Voice Mode
- Dual Voice Mode

Auto Accompaniment
- 100 Styles
- Auto Accompaniment ON/OFF
- Accompaniment Track : RHYTHM1/2, BASS, CHORD1/2, PAD, PHRASE1/2
- Accompaniment Track Settings : ON/OFF
- Accompaniment Control : SYNC START, SYNC STOP, START/STOP, INTRO, MAIN A/B (AUTO FILL), ENDING
- Beat Indicator
- Virtual Arranger ON/OFF
- Accompaniment Volume
- Revoice : Volume, Pan, Reverb Send Level, Chorus Send Level
- Virtual Arranger

One Touch Setting

Overall Controls
- Tempo : 32 — 280
- Pitch Bend Range
- Transpose
- Touch Sensitivity
- Master Tuning
- Scale Tuning
- Song Transpose
- Metronome
- Split Voice Split Point
- Accompaniment Split Point
- Fingering Mode : SINGLE FINGER/FINGERED 1/FINGERED 2/ FULL KEYBOARD/MULTI-FINGER
- Voice Set

Digital Effect
- Reverb : 13 types
- Chorus : 10 types
- DSP (system/insertion) : 46 types
- Harmony : 16 types

Registration Memory
- 32 Regist Bank : 1 — 4
- Accompaniment Freeze

Multi Pads
- 36 Multi Pad Sets
- 4 Pads + STOP
- Chord Match

Song
- Song Volume
- Minus One Practice (Minus One Channel Setting)
- Repeat Play
- Revoice (User song only) : Volume, Octove, Pan, Reverb Send Level, Chorus Send Level, DSP Send Level

Song Recording
- User Song : 4 Songs
- Recording Tracks : ACCOMPANIMENT, MELODY 1 — 4
- Song Clear, Track Clear

Style Recording
- User Style : 3 Styles
- Recording Tracks : 5 Sections x 8 Tracks
- Drum Cancel
- Quantize
- All Clear, Track Clear

Multi Pad Recording
- User Pad : 4 Pad Sets
- Chord Match
- Pad Clear, Bank Clear

MIDI
- Transmit Settings
- Receive Settings
- Local Control
- Clock
- Bulk Data Send/Receive
- Initial Data Send

Auxiliary Jacks
- DC IN 10-12V, PHONES, SUSTAIN, AUX OUT R, L/L+R, MIDI IN/OUT, TO HOST

Amplifiers
- 6 W + 6 W (when using PA-6 power adaptor)
- 4 W + 4 W (when using batteries)

Speakers
- 12cm (4-3/4") x 2

Power Consumption
- 22 W (when using PA-6 AC power adaptor)

Batteries
- Six SUM-1, "D" size, R-20 or equivalent batteries

Rated Voltage
- DC 10-12V

Dimensions (W x D x H)
- 952 x 387 x 147 mm

Weight
- 8.0 kg (13 lbs.) excluding batteries

Supplied Accessories
- Music Cartridge
- Music Stand
- Owner's Manual

Optional Accessories
- Headphones : HPE-150
- AC Power Adaptor : PA-6
- Foot Switch : FC4, FC5
- Keyboard Stand : L-6
- Music Cartridge

Output Level
- Refer to TEST PROGRAM section of this manual.

■ MIDI IMPLEMENTATION CHART

[Portable Keyboard]
Model: PSR-530

MIDI Implementation Chart

Date: 1997. 4. 14
Version: 1.0

Function		Transmitted	Recognized	Remarks
Basic	Default	1~16 CH (*1)	1~16 CH (*2)	
Channel	Changed	1~16 CH (*1)	1~16 CH (*2)	
	Default	Mode 3	Mode 3	
Mode	Messages	X	X	
	Altered	*****	X	
Note		0~127	0~127	
Number	: True voice	*****	0~127	
Velocity	Note on	O 9nH, v=1~127	O 9nH, v=1~127	
	Note off	X 9nH, v=0	X	
After	key's	X	X	
Touch	Ch's	X	O	
Pitch Bender		O	O	
Control Change	0, 32	O	O	Bank select
	1	X (*3)	O	Modulation
	5	X	O	Portament time
	7, 10, 11	O	O	
	6, 38	X (*3)	O	Data entry
	64, 65	O	O	
	66, 67	X	O	
	71 — 74	X (*3)	O	Sound controller
	84	X (*3)	O	Portament control
	91, 93, 94	O	O	Effect depth
	96, 97	X	O	RPN increment, decrement
	98, 99	X (*3)	O	NRPN LSB, MSB
	100, 101	O	O	RPN LSB, MSB
	120	X	O	All sound off
	121	X	O	Reset all controllers
Program Change	: True #	O 0~127 *****	O 0~127	
System Exclusive		O	O	
System	: Song Position	X	X	
	: Song Select	X	X	
Common	: Tune	X	X	
System	: Clock	O	O	
Real Time	: Commands	O	O	
Aux	: Local ON/OFF	X	X	
	: All Notes Off	X	O 123~127	
Messages	: Active Sense	O	O	
	: Reset	X	X	

Mode 1 : OMNI ON, POLY
Mode 2 : OMNI ON, MONO
O : Yes
Mode 3 : OMNI OFF, POLY
Mode 4 : OMNI OFF, MONO
X : No

PSR-530

■ PANEL LAYOUT

■ Top Panel Controls

❶ STAND BY/ON Switch

❷ MASTER VOLUME Control

❸ DEMO Button

❹ TEMPO Buttons

❺ TRANSPOSE Buttons

❻ ACCOMPANIMENT/SONG VOLUME Buttons

❼ AUTO ACCOMPANIMENT SECTION
- AUTO ACCOMPANIMENT ON/OFF Button
- SYNC STOP Button
- SYNC START Button
- INTRO Button
- MAIN/AUTO FILL A & B Buttons
- ENDING Button

❽ RECORD Button

❾ START/STOP Button

❿ DIGITAL EFFECT SECTION
- REVERB Button
- CHORUS Button
- DSP Button
- VARIATION Button
- HARMONY Button

⓫ DISPLAY & RELATED CONTROLS
- DISPLAY
- MENU Buttons
- SUB MENU Buttons
- VOICE Button
- STYLE Button
- SONG Button
- CARTRIDGE Button
- REVOICE Button
- TRACK Buttons

⓬ REGISTRATION MEMORY SECTION
- MEMORY Button
- 1, 2, 3, 4 Buttons
- FREEZE Button

⓭ ONE TOUCH SETTING Button

⓮ NUMBER Buttons

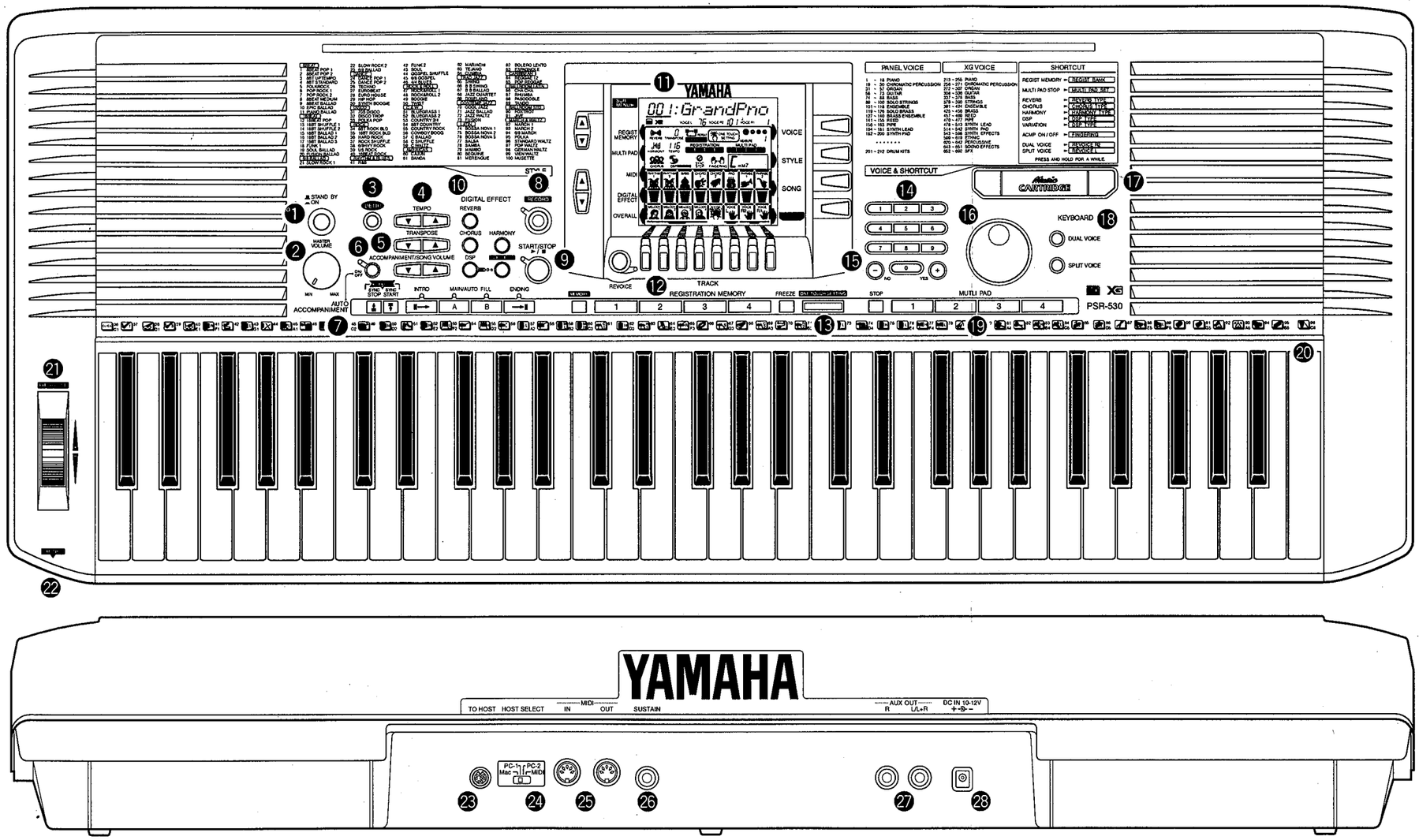

⓯ + and – Buttons

⓰ Data Dial

⓱ MUSIC CARTRIDGE Slot

⓲ KEYBOARD SECTION
- DUAL VOICE Button
- SPLIT VOICE Button

⓳ MULTI PAD SECTION
- STOP Button
- 1, 2, 3, 4 Buttons

⓴ Keyboard

㉑ PITCH BEND Wheel

㉒ PHONES Jack

■ Rear Panel Controls

㉓ TO HOST Connector

㉔ HOST SELECT Switch

㉕ MIDI IN and OUT Connectors

㉖ SUSTAIN Jack

㉗ AUX OUT R, L/L+R Jacks

㉘ DC IN 10-12V Jack

◆ The Music Stand

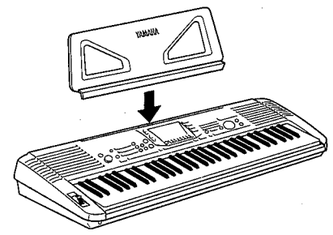

The PSR-530 is supplied with a music stand that can be attached to the instrument by inserting it into the slot at the rear of the control panel.

■ パネルレイアウト

■フロントパネル

❶STAND BY/ON(スタンドバイ/オン)スイッチ
❷MASTER VOLUME(マスターボリューム)コントロール
❸DEMO(デモ)ボタン

❹TEMPO▼▲(テンポ)ボタン
❺TRANSPOSE▼▲(トランスポーズ)ボタン
❻ACCOMPANIMENT/SONG VOLUME▼▲(アカンパニメント/ソングボリューム)ボタン

❼AUTO ACCOMPANIMENT(オートアカンパニメント)部
AUTO ACCOMPANIMENT ON/OFF(オートアカンパニメントオン/オフ)ボタン
SYNC STOP(シンクロストップ)ボタン
SYNC START(シンクロスタート)ボタン
INTRO(イントロ)ボタン
MAIN/AUTO FILL A, B(メイン/オートフィルA, B)ボタン
ENDING(エンディング)ボタン

❽DIGITAL EFFECT(デジタルエフェクト)部
REVERB(リバーブ)ボタン
CHORUS(コーラス)ボタン
DSPボタン
VARIATION(DSPバリエーション)ボタン
HARMONY(ハーモニー)ボタン

❾RECORD(録音)ボタン
❿START/STOP(スタート/ストップ)ボタン

⓫ディスプレイ
⓬MENU▼▲(メニュー)ボタン
⓭SUB MENU▼▲(サブメニュー)ボタン

⓮VOICE(ボイス)ボタン
⓯STYLE(スタイル)ボタン
⓰SONG(ソング)ボタン
⓱CARTRIDGE(カートリッジ)ボタン

⓲REVOICE(リボイス)ボタン
⓳TRACK(トラック)ボタン

⓴REGISTRATION MEMORY(レジストレーションメモリー)部
MEMORY(メモリー)ボタン
1~4ボタン
FREEZE(フリーズ)ボタン

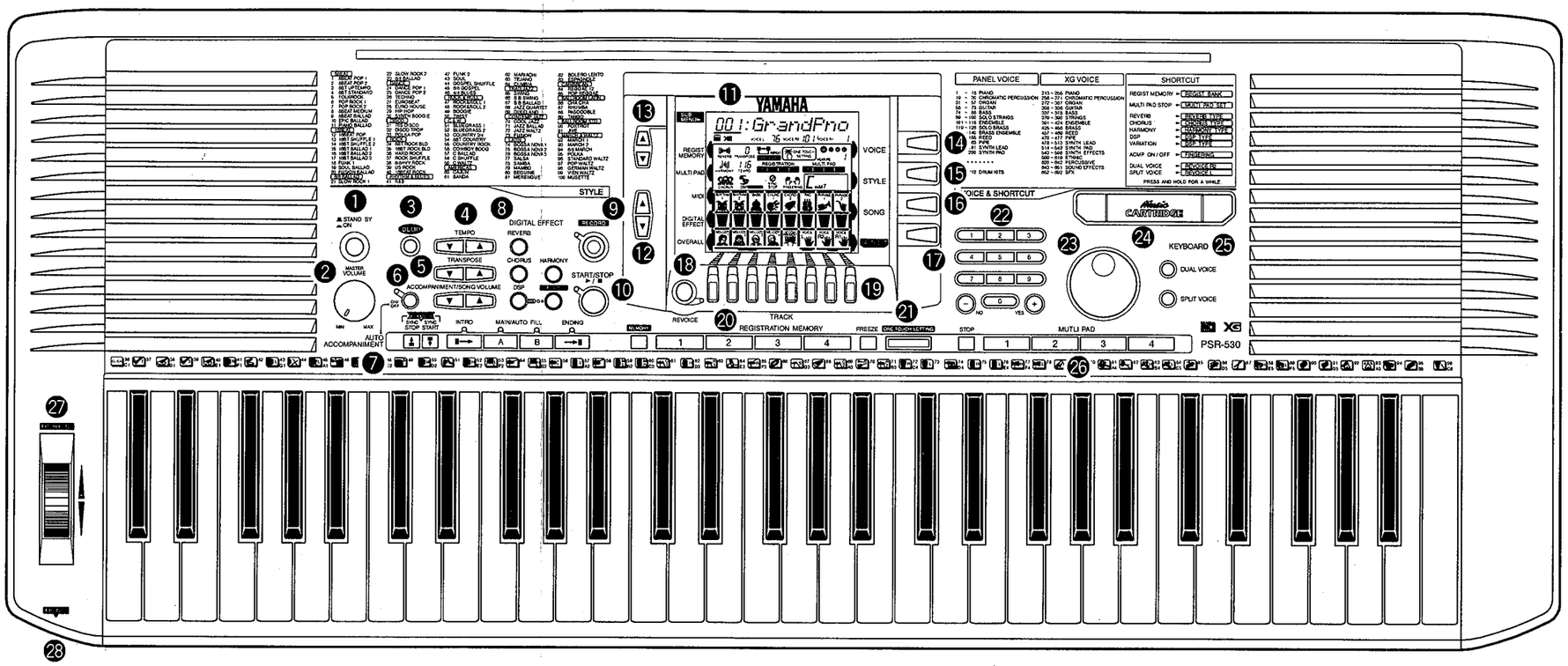

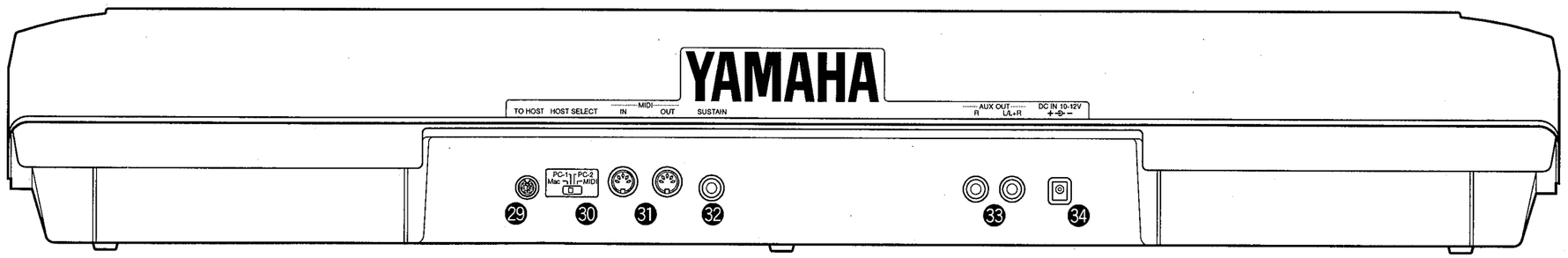

㉑ONE TOUCH SETTING(ワンタッチセッティング)ボタン

㉒ナンバーボタン[1]~[0], [+](YES), [−](NO)ボタン

㉓ダイアル

㉔Music CARTRIDGE(ミュージックカートリッジ挿入口)

㉕KEYBOARD(キーボード)部
DUAL VOICE(デュアルボイス)ボタン
SPLIT VOICE(スプリットボイス)ボタン

㉖MULTI PAD(マルチパッド)部
STOP(ストップ)ボタン
1~4ボタン

㉗PITCH BEND(ピッチベンド)ホイール

㉘PHONES(ヘッドフォン)端子

■リアパネル

㉙TO HOST(トゥーホスト)端子
㉚HOST SELECT(ホストセレクト)スイッチ
㉛MIDI IN/OUT端子
㉜SUSTAIN(サステイン)端子
㉝AUX OUT R, L/L+R(外部出力)端子
㉞DC IN 10-12V(電源アダプター接続)端子

■ 総合仕様

鍵 盤
レギュラーサイズ61鍵 (C1～C6：タッチレスポンス付)

ディスプレイ
大型液晶ディスプレイ(LCD)

セットアップ
スタンバイ/オンスイッチ
マスターボリューム ： MIN～MAX

コントロール&ナンバーボタン
MENU▼▲ボタン、VOICEボタン、STYLEボタン、SONGボタン、CARTRIDGEボタン、SUB MENU▼▲ボタン、[1]～[0]ボタン、[＋](YES), [－](NO)ボタン

カートリッジスロット

デモソング
12曲

ボイス
パネルボイス200音色 ＋12ドラムキット＋ XGボイス480音色(最大同時発音数32)
ボイスセット機能付

R1/R2/Lボイス
リボイス：ボリューム、オクターブ、パン、リバーブセンドレベル、
コーラスセンドレベル、DSPセンドレベル

スプリットボイスモード
デュアルボイスモード

オートアカンパニメント(自動伴奏機能)
100スタイル
アカンパニメント：オン/オフ
アカンパニメントトラック：リズム1/2、ベース、コード1/2、
パッド、フレーズ1/2
アカンパニメントトラック設定 ：オン/オフ
アカンパニメントコントロール ：シンクロスタート、シンクロストップ、スタート/ストップ、イントロ、メインA/B(オートフィル)、エンディング
ビートランプ
アカンパニメントボリューム
リボイス：ボリューム、パン、リバーブセンドレベル、
コーラスセンドレベル
バーチャルアレンジャー

ワンタッチセッティング

全体のコントロール
テンポ： 32～280
トランスポーズ
ピッチベンドレンジ
タッチセンス
チューニング
スケールチューニング
ソングトランスポーズ
メトロノーム
スプリットボイスモードのスプリットポイント
オートアカンパニメントのスプリットポイント
フィンガリングモード：シングルフィンガー/フィンガード1/フィンガード2/フルキーボード/マルチフィンガー
ボイスセット

デジタルエフェクト
リバーブ ：13種類
コーラス ：10種類
DSP ：46種類(システム/インサーション)
ハーモニー：16種類

レジストレーションメモリー：1～4
32バンク
アカンパニメントフリーズ

マルチパッド：1～4
36マルチパッドセット
コードマッチ

ソング
ソングボリューム
マイナスワン再生(マイナスワンチャンネル設定)
リピート再生
リボイス(ユーザーソングのみ)：
ボリューム、オクターブ、パン、リバーブセンドレベル、
コーラスセンドレベル、DSPセンドレベル

ソング録音
ユーザーソング ：4曲
録音トラック ：アカンパニメント、メロディ 1～4
ソングクリア、トラッククリア

スタイル録音
ユーザースタイル：3(101～103)
録音トラック：5セクション×8トラック
ドラムキャンセル
クオンタイズ
トラッククリア、オールクリア

マルチパッド録音
ユーザーパッドセット：4(37～40)
コードマッチ
パッドクリア、バンククリア

MIDI
送信設定
受信設定
ローカルオン/オフ
クロック
バルクダンプ送信/受信
イニシャルセンド

付属端子
DC IN 10-12V、PHONES、SUSTAIN、AUX OUT R, L/L+R、MIDI IN/OUT、TO HOST

アンプ実用最大出力
電源アダプターPA-6使用時 6W＋6W (EIAJ)
乾電池使用時 4W＋4W (EIAJ)

スピーカー
12cm×2

使用電池
単1乾電池(1.5V)×6

電池寿命
アルカリ電池で約4時間
(デモ演奏連続使用：マスターボリューム約70%)

使用電源アダプター
PA-6

消費電力
電源アダプターPA-6使用時 34W

寸法(幅×奥×高mm)
952×387×147

重量(kg)乾電池含まず
8.0

付属品
ミュージックカートリッジ、電源アダプターPA-6、譜面立て、和文シート、取扱説明書、保証書

出力レベル
本サービスマニュアルの "テストプログラム" の項目を参照して下さい。

■ CIRCUIT BOARDS (シート基板図)

Notes)
Circuit Board: DM (VY849400) XT031B0 CE
Circuit Board: DM (VZ616200) XT031B0 FCC

1. IC
IC 001: HD6437042E00F (XT125A00) CPU
IC 002: IC-PST591D-2 (XR902A00) RESET
IC 101: LHMN5HXD (XT898100) PROGRAM 32M
IC 103: M5M51008BP-70LL (XT339A00) SRAM 1M
IC 104: MSM514260C-70 (XT810A00) DRAM or M5M44260CTP-7 (XS444A00) DRAM 4M
IC 105: TC74AC139P (XL123A00) DECODER
IC 201: TC203C060AF-001 (XS724A00) SWP00M
IC 202: (XT615A00) WAVE ROM
IC 203: LH64256CZ-70 (XS434A00) 70NS DRAM
IC 301: UPD63200GS (XM145A00) D/A CONVERTER
IC 501,601: TC74HC374AP (IR037400) D.FF
IC 502: TC74AC32P (XG658A00) OR
IC 701: PQ05RA1 (XL450A00) REGURATOR +5V
IC 702: S-81250SGY-Z (XT625A00) REGURATOR +5V
IC 703: UPC29M33HF (XT333A00) REGURATOR +3.3V
IC 704: PQ09RA1 (XQ774A00) REGURATOR +9V

2. Digital Transistor
TR 501,502: DTC123JS TP (VK165500)
TR 503-506: DTB123YS TP (VT455400)

3. Diode
D 701: 1SS133,1SS176 (VB941200)

4. IC Socket
: DICF-42CS-E (VK863100)

5. Mylar Capacitor
C 308,309: 0.0470 50V J (UA654470)

6. Semiconductive Cera. Cap.
C 002,003,101-105, 202-205,206,209, 210,301,302,401, 402,501,502,504, 601-603,702,705, 707,709,711,714, 801-803: 0.1000 25V Z (VC694800)

7. Ceramic Capacitor
C 006: 470P 50V K (FG612470)
C 007: 100P 50V J (FG652100)
C 207,208: 10P 50V D (FG651100)
C 505,506: 0.022 50V Z (UG444220)

8. Electrolytic Cap.
C 001,201,303,604, 703,706,708: 100.00 10.0V (UJ828100)
C 304,305: 47.00 10.0V (UJ827470)
C 306,307: 1.00 50.0V (UJ866100)
C 503: 1000 6.3V (UJ819100)
C 701,704,710, 713: 10.00 50.0V (UJ867100)
C 712: 100.00 25.0V (UJ848100)

9. Ceramic Capacitor Array
CA 501,502: 470P X12 (VT487100)
CA 801: 100P X8 50V M (VH484100)

10. Carbon Resistor
R 001: 560.0 1/4 J (HF755560)
R 002: 3.3K 1/4 J (HF756330)
R 003: 1.0K 1/4 J (HF756100)
R 004-007,501, 502: 100.0 1/4 J (HF755100)
R 008,010,503, 802,804: 10.0K 1/4 J (HF757100)
R 009,101,102, 401,801,805: 47.0K 1/4 J (HF757470)
R 201: 1.0M 1/4 J (HF759100)
R 202: 680.0 1/4 J (HF755680)
R 301,302: 180.0 1/4 J (HF755180)
R 504,505: 22.0 1/4 J (HF754220)
R 506,507,702: 22.0K 1/4 J (HF757220)
R 601: 820.0 1/4 J (HF755820)
R 602,604-613: 220.0 1/4 J (HF755220)
R 701: 39.0K 1/4 J (HF757390)
R 803: 470.0K 1/4 J (HF758470)
R 806,807: 100.0K 1/4 J (HF758100)

11. Resistor Array
RA 001: RGLE9X473J (VF344000)
RA 002,003: EXB-Z05E 47K X 4 (VG733400)
RA 401-405: EXBF14V221J (VY882100)
RA 501,502: EXB-Z09E 47K X 8 (VG733700)

12. Coil
L 801-806: FL5R200QNT (VB835000)

13. Ferrite Bead
L 301-303, 701-703: EXC-ELDR35V (VM898600)

14. Quartz Crystal Unit
CR 201: 33.8688M AT-49 (VT487600)

15. Ceramic Resonator
CR 001: 7.00M EFOEC7004T (VY856300)

16. Connector Base Post
CN 301: PH- 4P TE (VB390000) to VR-CN303
CN 403: PSB4D 60P (VU538700) for Music cartridge
CN 501: 52147 10P (VF728200) to PN(1/5)-CN101
CN 802: 52147 6P (VF728300) to MKS2-CN1

17. Wire Trap
CN 502: 52147 13P (VK025700) to PN(1/5)-CN100
CN 601: 52147 13P (VK025700) to LCD
CN 602: 52147 2P (VK024600) to LCD
CN 701: 52147 5P (VK024900) to SW-CN708
CN 801: 52147 8P (VK025200) to DM.JK-CN01

18. Heat Sink
HS 001: (VJ636100)

19. Jumper Wire
J 104,105,202, 204,603: 0.55 (VA078900)

PSR-530

• DM Circuit Board (DMシート)

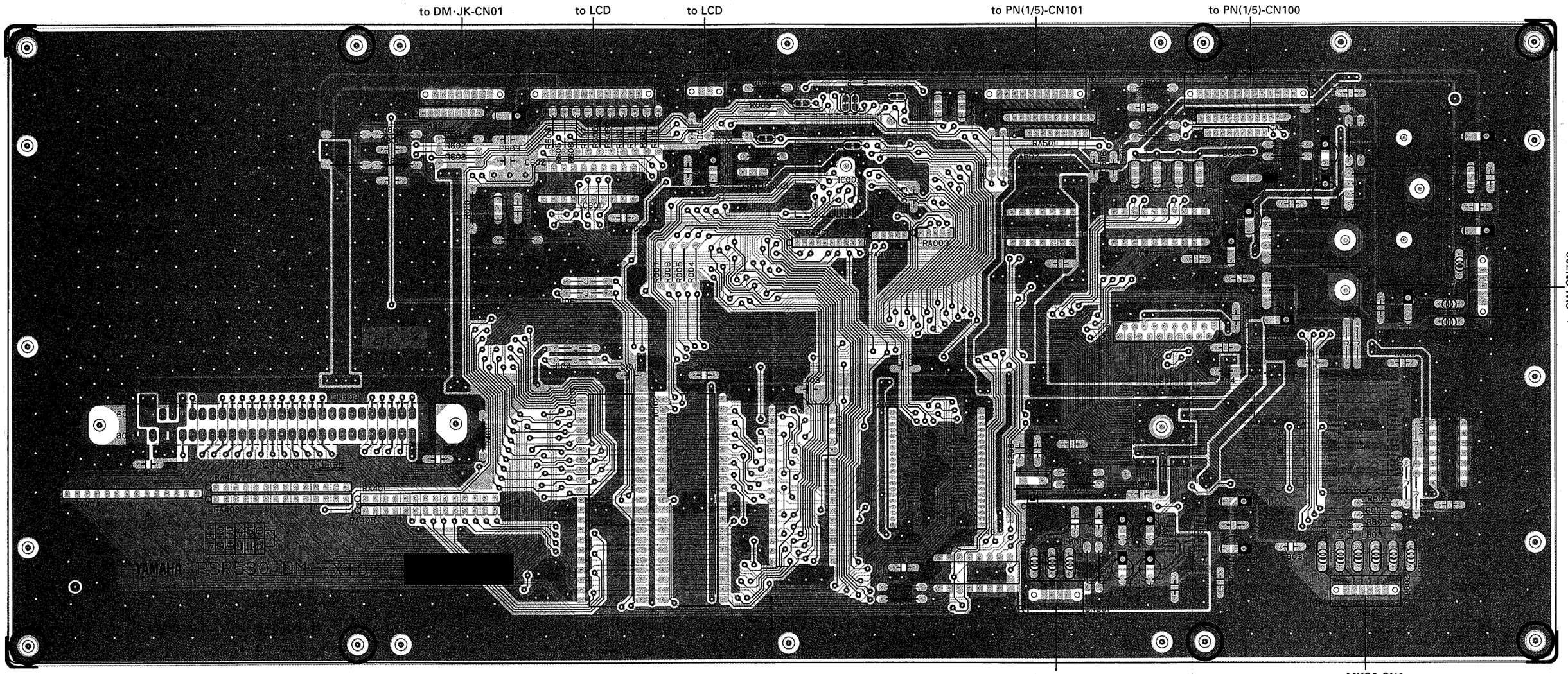

Component side (部品側)

• IC001, 201 installing (IC001, 201の取付け)

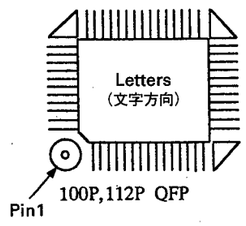

• IC104, 202, 302 installing (IC104, 202, 302の取付け)

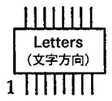

• CN403 installing (CN403の取付け)

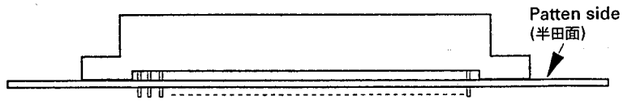

• IC701, 703 installing (IC701, 703の取付け)

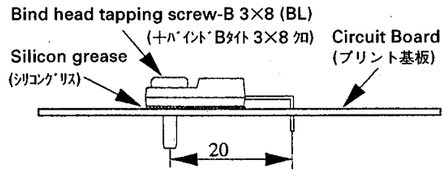

• IC704 installing (IC704の取付け)

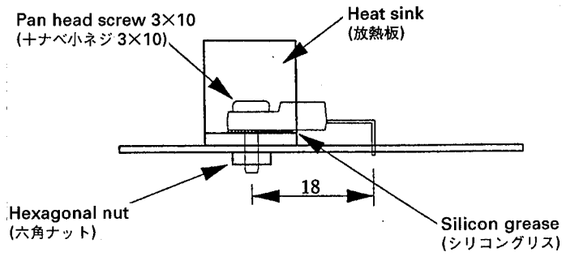

• AM Circuit Board (AMシート)
• AM

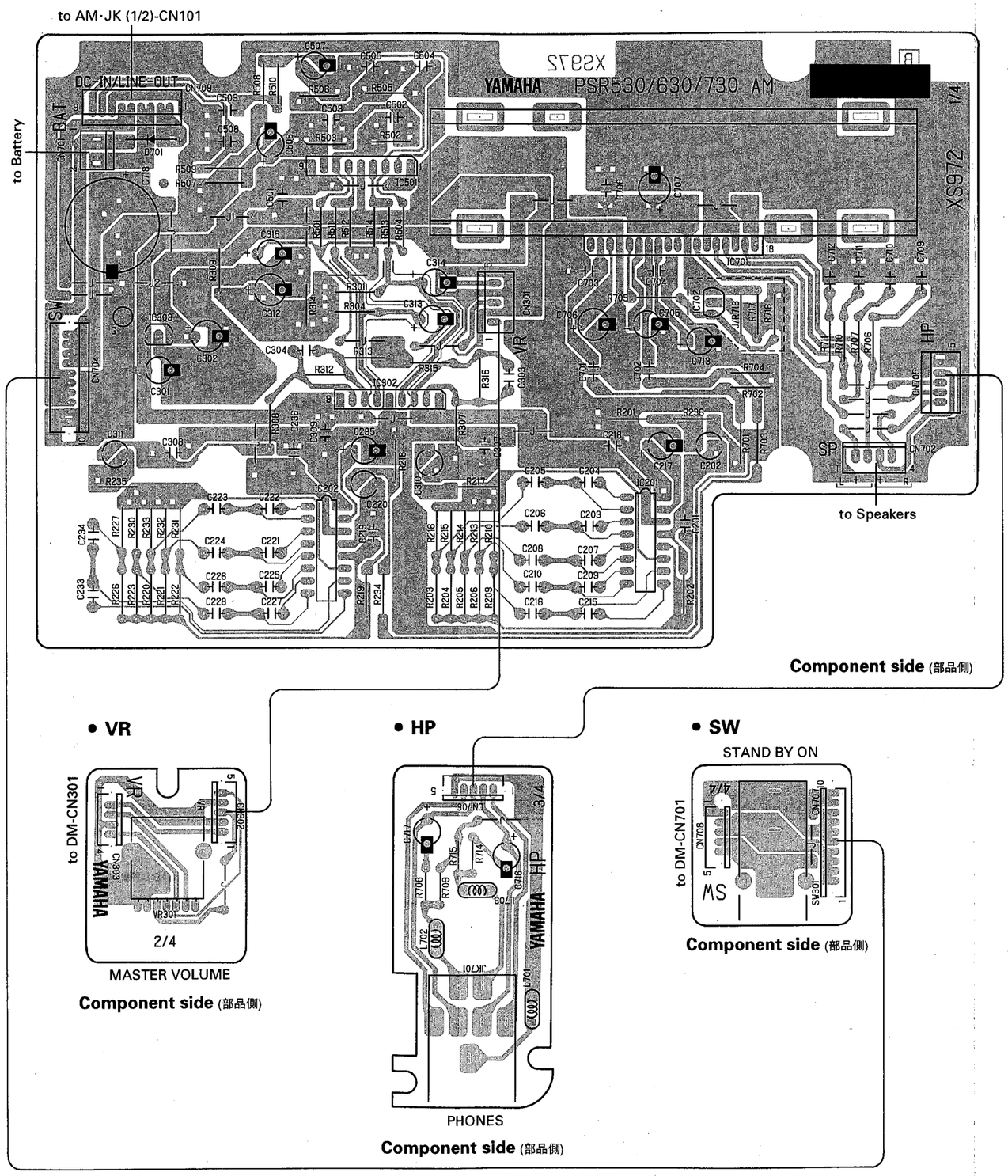

Notes)

Circuit Board: AM (VV854500) XS972B0 CE
Circuit Board: AM (VZ616300) XS972B0 FCC
Circuit Board: AM (--) XS972B0
Circuit Board: VR (--) XS972B0
Circuit Board: HP (--) XS972B0
Circuit Board: SW (--) XS972B0

1. IC
IC 201,202: M5227P (XF751A00) EQUALIZER
IC 302,501: UPC4570HA (XB247A00) OP AMP
IC 303: AN77L09-TA (XT676A00) REGURATOR +9V
IC 701: LA4705NA (XQ619A00) POWER AMP 17W

2. Diode
D 701: 20E1-FC4 (VL723600) or LT2A02-E (VY717100)

3. Mylar Capacitor
C 207,225: 0.0680 50V J (UA654680)
C 209,216,227, 234,307,308: 0.0100 50V J (UA654100)
C 210,228: 0.0180 50V J (UA654180)
C 709-712: 0.0470 50V J (UA654470)

4. Monolithic Mylar Capacitor
C 203,221: ECQ-V1H124JL3 (VR168400)
C 204,222: ECQ-V1H564JL3 (VR169300)
C 205,223: ECQ-V1H105JL3 (VU838100)
C 206,224: ECQ-V1H684JL3 (VR169400)
C 208,226: ECQ-V1H154JL3 (VR168500)
C 502,504: ECQ-V1H104JL3 (VR168300)

5. Ceramic Capacitor
C 201,219: 1500P 50V K (FG613150)
C 215,233: 100P 50V K (FG612100)
C 503,505: 22P 50V J (FG651220)
C 508,509: 5600P 50V K (FG613560)
C 703,704: 470P 50V K (FG612470)

6. Monolithic Ceramic Cap.
C 701,702: 1.000 25V Z (VT757800)

7. Semiconductive Cera. Cap.
C 218,236, 309,501,708: 0.1000 25V Z (VC694800)

8. Electrolytic Cap.
C 202,220: 3.30 50.0V (UN866330)
C 217,235,315, 716,717: 47.00 16.0V (UJ837470)
C 301: 100.00 16.0V (UJ838100)
C 302,707: 100.00 25.0V (UJ848100)
C 310,311: 10.00 16.0V (UN837100)
C 312,313,314: 10.00 16.0V (UJ837100)
C 506,507: 1.00 50.0V (UJ866100)
C 705: 33.00 10.0V (UJ827330)
C 706: 100.00 10.0V (UJ828100)
C 713: 0.47 50.0V (UJ865470)
C 718: 6800 25.0V (VT848900)

9. Coil
L 701-703: FL5R200QNT (VB835000)

10. Carbon Resistor
R 201,218,313, 315,705: 10.0K 1/4 J (HF757100)
R 202,219: 3.3K 1/4 J (HF756330)
R 203,205,210, 220,222,227: 22.0K 1/4 J (HF757220)
R 204,221: 3.9K 1/4 J (HF756390)
R 206,215,223, 232: 18.0K 1/4 J (HF757180)
R 209,213,226, 230: 1.0K 1/4 J (HF756100)
R 214,231: 470.0 1/4 J (HF755470)
R 217,235: 4.7K 1/4 J (HF756470)
R 234,236: 560.0 1/4 J (HF755560)
R 301,304, 512,514: 470.0K 1/4 J (HF758470)
R 307,308: 150.0 1/4 J (HF755150)
R 309,314: 2.2K 1/4 J (HF756220)
R 511,513: 47.0K 1/4 J (HF757470)
R 312,316: 33.0K 1/4 J (HF757330)
R 501,504: 12.0K 1/4 J (HF757120)
R 502,505,701, 703: 27.0K 1/4 J (HF757270)
R 503,506-508: 100.0K 1/4 J (HF758100)
R 509,510: 680.0 1/4 J (HF755680)
R 702,704: 6.8K 1/4 J (HF756680)
R 706,707,710, 711: 2.2 1/4 J (HF753220)
R 708,714: 100.0 1/4 J (HF755100)
R 709,715: 330.0 1/4 J (HF755330)

11. Rotary Variable Resistor
VR 301: A10.0K XV0141GPV (VY711800) or A10.0K XV0141GPV (VZ048400) MASTER VOLUME

12. Push Switch
SW 301: SDDLB1 J,UC,CEE (VY980400) STAND BY/ON

13. Phone Jack
JK 701: JACK YKB21-50 (LB101870) or JACK HTJ064-0 (VV943300) PHONES

14. Base Post Connector
CN 701: XH 2P (LB918020) to Battery
CN 702: XH 4P (LB918040) to Speakers

15. Cable Holder
CN 704: 51048 10P (VI878800) to SW-CN707
CN 707: 51048 10P (VI878800) to AM-CN704
CN 706: 51048 5P (VI878300) to AM-CN705
CN 708: 51048 5P (VI878300) to DM-CN701

16. Wire Trap
CN 705: 52147 5P (VK024900) to HP-CN706
CN 709: 52147 9P (VK025300) to AM.JK(1/2)-CN101

17. Connector Assembly
W 001: 5P L=250 DM-SW (VY850200)
W 002: 10P L=300 AM-SW (VY850400)
W 003: 5P L=600 AM-HP (VY850300)
W 005: 4P L=360 DM-VR (VY851900)
W 006: 5P L=250 AM-VR (VY852000)
W 007: L=120 AM-DM EARTH(VY852100)

18. Jumper Wire
J 2:
R 216,233,718: 0.55 (VA078900)

2NA-VV85450

PSR-530

• AM-JK Ciruit Board (AM-JKシート)

• AM-JK (1/2)

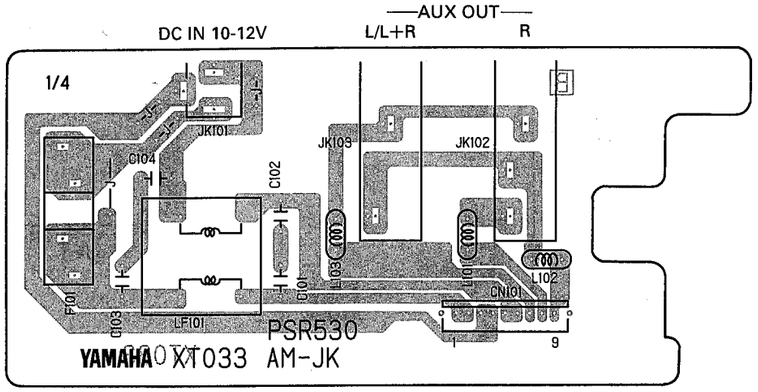

to AM-CN709

Component side (部品側)

• AM-JK (2/2)

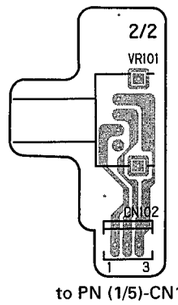

to PN (1/5)-CN102

Component side (部品側)

Notes)

Circuit Board: AM-JK (VY849800) XT033B0

1. Semiconductive Cera. Cap.
C 101-104: 0.1000 25V Z (VC694800)

2. Line Filter
LF 101: SU10VD-20020 (VI486800)

3. Coil
L 101-103: FL5R200QNT (VB835000)

4. Fuse
: 5.00A S (KB003240)

5. Rotary Variable Resistor
VR 101: B10K EVJ05DF25B1 (VT432100)
PITCH BEND

6. Phone Jack(Connector)
JK 101: SOCKET HEC23 (VC664500)
DC IN 10-12V
JK 102: JACK(BL)YKB21-50 (VB312600) or
JACK JY6314-01-1 (VV943400)
AUX OUT R
JK 103: JACK(BL)YKB21-50 (VC687500)
AUX OUT L/L+R

7. Cable Holder
CN 101: 51048 9P (VI878700) to AM-CN709

8. Wire Trap
CN 102: 52147 3P (VK024700) to PN(1/5)-CN102

9. Connector Assembly
W 001: 9P L=250 AM-AM.JK (VY850500)

10. Jumper Wire
: 0.55 (VA078900)

• DM-JK Ciruit Board (DM-JKシート)

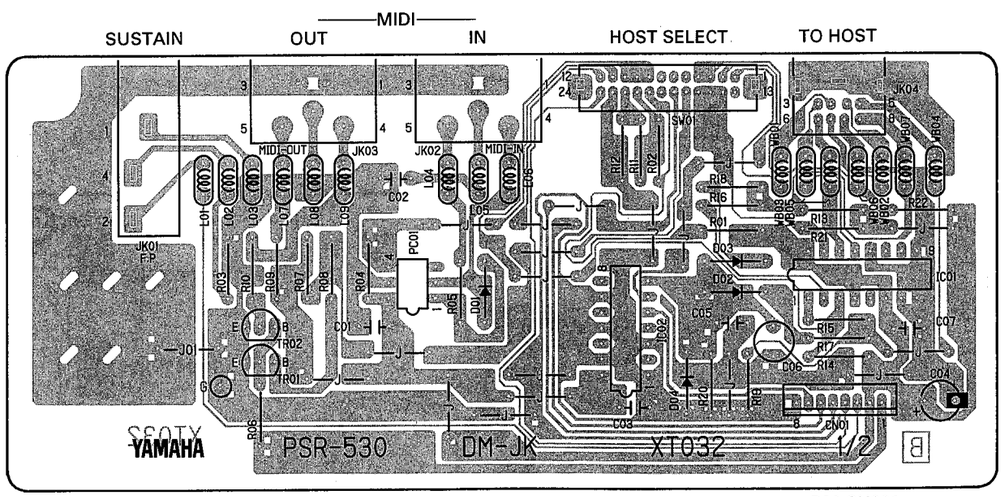

to DM-CN801

Component side (部品側)

Notes)

Circuit Board: DM-JK (VY849600) XT032B0

1. IC
IC 01: MC34051P (XP094A00)
LINE TRANCEIVER
IC 02: SN74HCU04N (IG142250) INVERTER

2. Transistor
TR 01,02: 2SC1740S R,S (IC174070)

3. Diode
D 01-04: 1SS133,1SS176 (VB941200)

4. Photo Coupler
PC 01: PC-900V (VG181900)

5. Electrolytic Cap.
C 04: 10.00 16.0V (UJ837100)
C 06: 47.00 6.3V (UN817470)

6. Semiconductive Cera. Cap.
C 01-03,05,07: 0.1000 25V Z (VC694800)

7. Carbon Resistor
R 01,02,07,11-14,
19,21: 10.0K 1/4 J (HF757100)
R 03: 47.0K 1/4 J (HF757470)
R 04: 270.0 1/4 J (HF755270)
R 05,09,10,
15,16: 220.0 1/4 J (HF755220)
R 06,08: 22.0K 1/4 J (HF757220)
R 17,18: 100.0 1/4 J (HF755100)
R 20: 1.0K 1/4 J (HF756100)

8. Coil
L 01-09: FL5R200QNT (VB835000)

9. Ferrite Bead
WB01-07: EXC-ELDR35V (VM898600)

10 Slide Switch
SW01: SSSF144-S06N-0 (VQ665200)
HOST SELECT

11. Phone Jack
JK 01: JACK(BL)YKB21-50 (VB312600)
SUSTAIN

12. DIN Connector
JK 02: JACK 5P YKF51-50 (VJ107200)
MIDI IN
JK 03: JACK 5P YKF51-50 (VJ107200)
MIDI OUT
JK 04: DINJACK 8P MD-S8 (VM761000)
TO HOST

13. Wire Trap
CN 01: 52147 8P (VK025200) to DM-CN801

14. Jumper Wire
: 0.55 (VA078900)

AM-JK : 2NA-VY84980
DM-JK : 2NA-VY84960

PSR-530

• PN Ciruit Board (PNシート)

• PN (1/5)

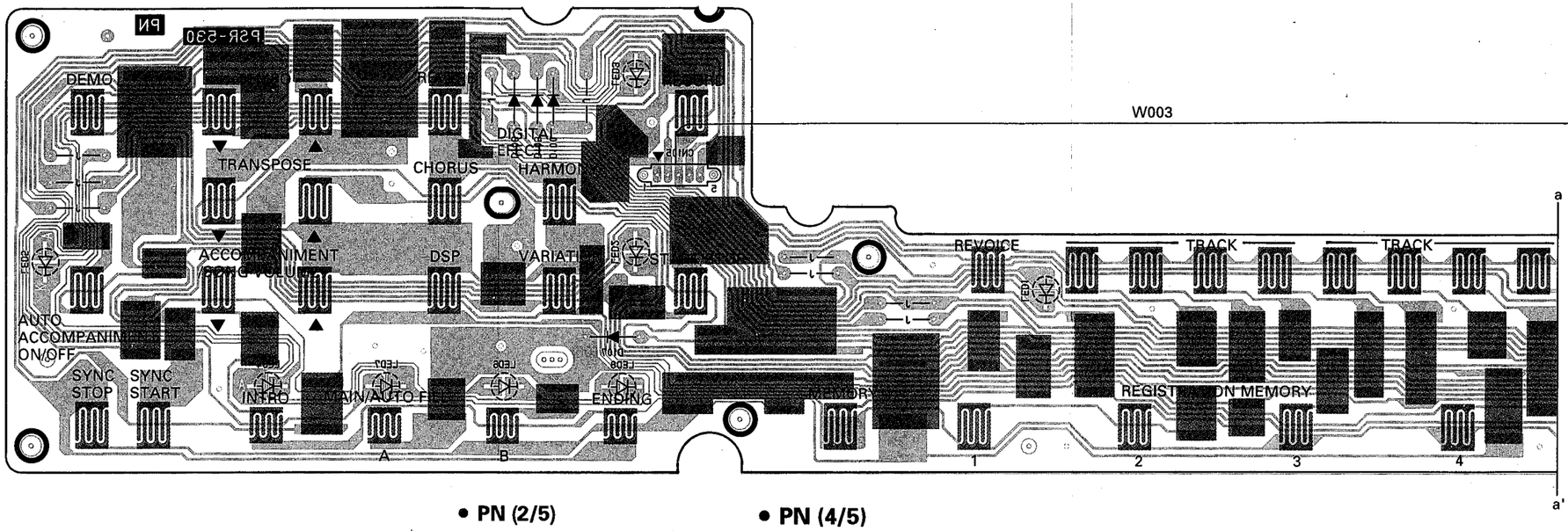

• PN (2/5)

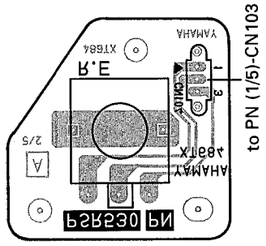

Component side (部品側)

• PN (3/5)

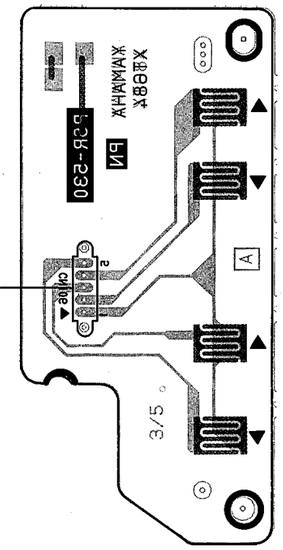

Component side (部品側)

• LED 1～8 installing (LED 1～8の取付け)

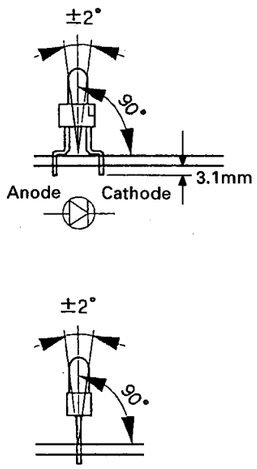

• PN (4/5)

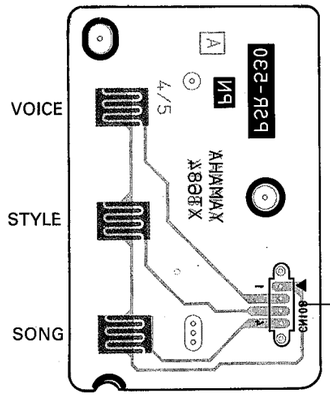

Component side (部品側)

• PN (5/5)



Component side (部品側)

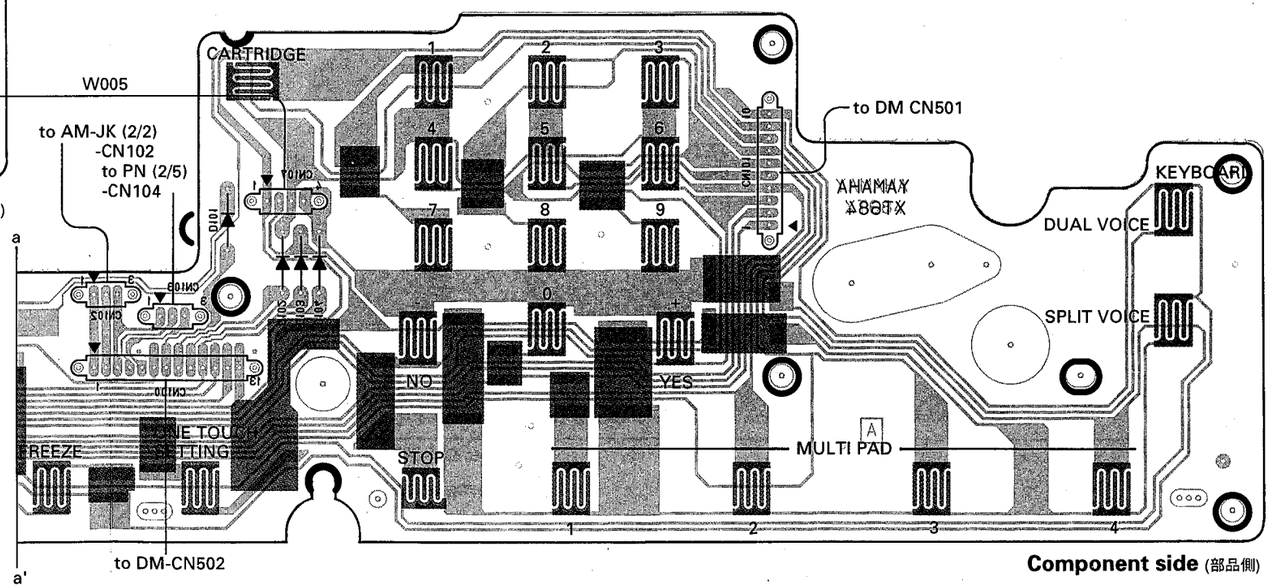

Component side (部品側)

Notes)

Circuit Board: PN (VY850000) XT684A0

1. **Diode**
   - D 100-107: 1SS133,1SS176 (VB941200)
2. **LED**
   - LED1: SLZ-190B-01 RE (VC341300) REVOICE
   - LED2-8: SLZ-190B-10-T2 RE (VI921400) AUTO ACCOMPANIMENT ON/OFF, START/STOP, RECORD, INTRO, ENDING, MAIN AUTO FILL A/B
3. **Lamp**
   - : .57W T4.2 6.3V25 (VZ057400)
4. **Encoder**
   - RE : REB161 PVB 15F (VU481300)
5. **Membrane Switch**
   - MB-L: L 21 (VY729200)
   - MB-C: C 15 (VY729300)
   - MB-R: R 20 (VY729400)
   - MB-UL: UL 4 (VY729500)
   - MB-UR: UR 3 (VY729600)
6. **Cable Holder**
   - CN 100: 51048 13P (VI879100) to DM-CN502
   - CN 101: 51048 10P (VI878800) to DM-CN501
   - CN 103: 51048 3P (VI878100) to PN(2/5)-CN104
   - CN 104: 51048 3P (VI878100) to PN(1/5)-CN103
   - CN 105: 51048 5P (VI878300) to PN(3/5)-CN106
   - CN 106: 51048 5P (VI878300) to PN(1/5)-CN105
   - CN 107: 51048 4P (VI878200) to PN(4/5)-CN108
   - CN 108: 51048 4P (VI878200) to PN(1/5)-CN107
7. **Wire Trap**
   - CN 102: 52147 3P (VK024700) to AM.JK(2/2)-CN102
8. **Connector Assembly**
   - W 001: 13P L=350 DM-PN1 (VY850700)
   - W 002: 10P L=310 DM-PN2 (VY850800)
   - W 003: 5P L=170 PN1 (VY851300)
   - W 004: 3P L=210 PN2 (VY851400)
   - W 005: 4P L=120 PN3 (VY851500)
9. **Jumper Wire**
   - : 0.55 (VA078900)

• MKS2 Ciruit Board (MKS2シート)

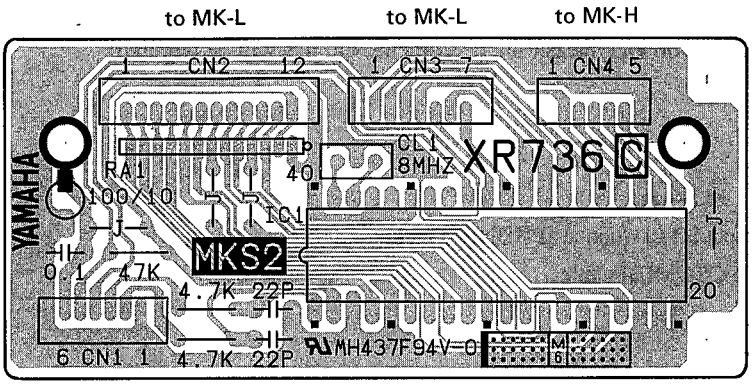

Notes)

Circuit Board: MKS2 (VU494600) XR736C0, XS829A0

1. IC

IC 1: HD63B05V0F07P (XR951A00) CPU

2. Ceramic Capacitor-SL

C 1,2: 22P 50V J (FG651220)

3. Semiconductive Cera. Cap.

C 4: 0.1000 25V M (VD930900)

4. Electrolytic Cap.

C 3: 100.00 10.0V (UJ828100)

5. Carbon Resistor

R 1,2: 4.7K 1/4 J (HF456470)

R 3: 47.0K 1/4 J (HF457470)

6. Resistor Array

RA 1: RGLE12X473J (VH373200)

7. Ceramic Resonator

CL 1: CST8.00MTW140 (VN002100) or
8.00M EFOEC8004 (VQ305500)

8. Connector

CN 1: 52147 6P (VF728300) to DM-CN802

9. Wire Trap

CN 2: 52147 12P (VK025600) to MK-L

CN 3: 52147 7P (VK025100) to MK-L

CN 4: 52147 5P (VK024900) to MK-H

10. Jumper Wire

: 0.55 (VA078900)

■ TEST PROGRAM

1. PREPARATION

To check the unit using the test program, the following measuring instruments and jigs will be required:

- Measuring instruments and jigs:

  Level meter (with a JIS-C filter)

  Frequency counter

  ※Notes: Impedance must be 1M Ω or above.

  Use stereo plugs, and connect 30 Ω load at [PHONES] jack.

  Music cartridge, Foot switch (FC4 or FC5), MIDI cable

2. HOW TO ENTER THE TEST PROGRAM

While depressing the C2#, F2 and G2# keys, turn the [STAND BY/ON] switch on.

3. PROCEEDING THROUGH THE TEST PROGRAM

- The LCD will display "TEST" when entering the test program.
- To select the program number, use [TEMPO▲/▼] button.
- To execute the test, press the [START/STOP] button.
- The LCD will display "OK" when the test result is OK.

  To proceed to the next test, press the [START/STOP] button again.
- The LCD will display "NG" when the test result is NG.

  Press the [DEMO] button to proceed the next test.

  While the test NO. 37 "MIDI check" result is NG, turn the [STAND BY/ON] switch off and re-enter the test program.

4. TEST ITEMS

TEST NO.	LCD display (Initial)	Test Functions and Judgment criteria
1	001: Version	Displays version for ROM (MAIN, STYLE, and WAVE).
2	002: Rom Chk1	Checks the PROGRAM ROM.
3	003: Ram Chk1	Checks all RAMs which are connected to CPU.
4	004: WRom Chk1	Checks WAVE ROM.
6	006: MC Chk 1	Insert the music cartridge into the cartridge slot. Checks the music cartridge connector.
9	009: Eff1 Chk	Checks Reverb effect Ram. Check that C3 note is output during this test.
11	011: TG1 Chk	Outputs the sine wave by changing the channels in sequence from A0 to C6. When a voice switch is depressed, the tone of the voice will sound. After autoscaling is finished, individual keys can be played. (If playing two or more keys simultaneously, the first depressed key has priority to make sound.)
13	013: Pit Chk	Connect the frequency counter to the [PHONES] jack. Check that the 440.0±0.22 Hz signal is output. Check output level (1 kHz) at this time. Connect the level meter (with a JIS-C filter) to the [PHONES] jack. (30Ω load) PHONES L/R : -35 dBm±2 dB Connect the level meter (with a JIS-C filter) to the [AUX OUT] jacks. AUX OUT L/R : -24.5 dBm±2 dB

14	014: Output R	Connect the level meter (with a JIS-C filter) to the [PHONES] jack. (30Ω load) Set the [MASTER VOLUME] at maximum. Check output level (1 kHz). PHONES L: Less than -78 dBm PHONES R: -30 dBm±2 dB
15	015: Output L	Connect the level meter (with a JIS-C filter) to the [PHONES] jack. (30Ω load) Set the [MASTER VOLUME] control at maximum. Check output level (1 kHz). PHONES L: -30 dBm±2 dB PHONES R: Less than -78 dBm
19	019: Noise	Connect the level meter (with a JIS-C filter) to the [PHONES] jack. (30Ω load) Set the [MASTER VOLUME] control at maximum. Check D/A converter noise. PHONES L/R: Less than -80 dBm
20	020: SW Chk	Check switches and LEDs on the panel. Press the switch which is displayed on the LCD. A pre-assigned note is output when depressing the switch. (With some switches, the corresponding LED will light up). Also check the dial by turning it; the LCD displays OK.
21	021: P LED	Check that all panel LEDs are lit up.
28	028: LCD On	Check that all LCD dots are on. The LCD becomes black.
29	029: LCD Off	Check that all LCD dots are off. The LCD becomes white.
31	031: PD1 Chk	Check that C3 note is output when pushing the pedal and C4 is output when releasing the pedal, and the LCD displays OK.
33	033: PB Chk	Check that C3 note is output when rotating the [PITCH BEND] wheel to minimum and C4 is output when rotating it to maximum, and the LCD displays OK.
37	037: MIDI Chk	After connecting the [MIDI IN] jack and [MIDI OUT] jack with a MIDI cable, execute the test. Check that C4 note is output and the test result appears on the LCD.
38	038: Host Chk	For factory test use only.
40	040: Battery Chk	Remove the AC adapter and put the batteries into the battery box. Check the LCD displays OK.
※41	041: Rom Chk2	Checks the PROGRAM ROM.
※42	042: Ram Chk2	Checks all RAMs which are connected to CPU.
※43	043: WRom Chk2	Checks WAVE ROM.
※45	045: MC Chk2	Insert the music cartridge into the cartridge slot. Checks the music cartridge connector.
※46	046: Back Up2	Performs the RAM back up check..
47	047: Factory	All RAMs are initialized and set to the factory preset data when executing this test.
48	048: Exit	Exit from the test program when executing this test.

Note: 0 dBm =0.775 V

※ **NOTE: The above tests Nos. 41-46, require approximately 25 minutes to conduct.**
If the time is not available to perform the tests, exit the program by pressing the [TEMPO▲] button.

■ INITIALIZE

Except for the data listed below, all PSR-530 panel settings are reset to their initial settings whenever the power is turned on. The data listed below are backed up — i.e. retained in memory — as long as an AC adapter is connected or a set of batteries is installed.

- Registration Memory
- User Song Data
- User Style Data
- User Pad Data
- MIDI Transmit Settings
- MIDI Receive Settings

■ Data Initialization

All data can be initialized and restored to the factory preset condition by turning on the power while holding the highest (rightmost) white key on the keyboard. "CLr:Back up" will appear briefly on the display.

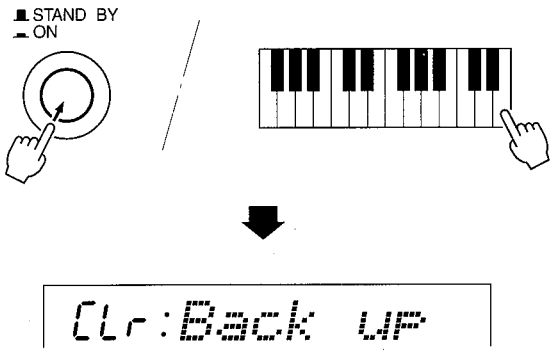

CAUTION

- ***All registration and song memory data, plus the other settings listed above, will be erased and/or changed when the data initialization procedure is carried out.***
- ***Carrying out the data initialization procedure will usually restore normal operation if the PSR-530 freezes or begins to act erratically for any reason.***

■ テストプログラム

1. 測定条件

本体をテストする場合は、次の測定器、治具が必要です。

- 測定器：レベル計（JIS-C フィルター）、周波数カウンター
  注 1　入力インピーダンスは 1M Ω以上
  注 2　特に指示のない限りステレオプラグを用い、30 Ω負荷を接続して[PHONES]端子にて測定します。
- 治具　：ミュージックカートリッジ、フットスイッチ（FC4 または FC5）、MIDI ケーブル

2. テストプログラムの起動

C2#と F2 と G2#の鍵盤を同時に押さえながら、[STAND BY/ON]スイッチを ON にします。

3. テストの進め方

テストプログラムが起動されると、LCD に“TEST”と表示されます。

- [TEMPO▲/▼]ボタンを押して、テストプログラムの項目を選択します。
- [START/STOP]ボタンを押すと、テストが実行されます。
- テスト結果が OK の場合は、LCD に OK が表示されます。
- 再度[START/STOP]ボタンを押すと、次のテストに進みます。
- テスト結果が NG の場合は、[DEMO]ボタンを押すと、次のテストプログラムに進みます。但し、NO.37 の MIDI Check で NG の場合は、電源を切り、テストプログラムを起動して、次のテストプログラムを選択してください。

4. テスト一覧

テスト NO.	LCD表示	テスト内容及び判定条件など
1	001: Version	ROMのバージョン表示。 ROM (MAIN, STYLE ,WAVE) のバージョンを表示します。
2	002: Rom Chk1	ROMチェック。 ROM (PROGRAM) をチェックします。OKが表示されることを確認します。
3	003: Ram Chk1	RAMチェック。CPU のバスに接続されている全てのRAMをチェックします。 OKが表示されることを確認します。
4	004: WRom Chk1	WAVE ROMをチェックします。OKが表示されることを確認します。
6	006: MC Chk 1	MUSIC CARTRIDGEをCARTRIDGE SLOTに差し込みます。 MUSIC CARTRIDGEのコネクタをチェックします。 OKが表示されることを確認します。
9	009: Eff1 Chk	エフェクトリバーブ用RAMチェック。リバーブ効果用RAMをチェックします。 正弦波(C3) が発音されます。聴感でノイズが無いことを確認します。
11	011: TG1 Chk	音源 1チェック (オートスケール)。 音源の1 chから64 chを順番に使用して、A0からC6までを正弦波で発音します。音色スイッチを押すとその音色で発音します。オートスケーリングが終了しますと鍵盤を弾くことで発音します。(単音、先着優先)
13	013: Pit Chk	[PHONES]端子に周波数カウンターを接続します。 ピッチ（440.0±0.22 Hz）チェック。 正しい信号が出力されていることを確認します。 このときの出力レベルをチェックします。 [PHONES]端子にレベル計を接続します(30Ω負荷)。[MASTER VOLUME] 最大。 PHONES L/R : -35 dBm±2 dB [AUX OUT]端子にレベル計を接続します（負荷オープン）。 AUX OUT L/L+R : -24.5 dBm±2 dB　の範囲にあることを確認します。

14	014: Output R	[PHONES]端子にレベル計を接続します。[MASTER VOLUME] 最大。 出力チェック。(1 kHz) PHONES L: -78 dBm以下、PHONES R: -30 dBm±2 dBであることを確認します。
15	015: Output L	[PHONES]端子にレベル計を接続しておきます。[MASTER VOLUME] 最大。 出力チェック。(1 kHz) PHONES L: -30 dBm±2 dB、PHONES R: -78 dBm以下であることを確認します。
19	019: Noise	[PHONES]端子にレベル計を接続しておきます。[MASTER VOLUME] 最大。 D/Aコンバータノイズチェック。 PHONES L/R : -80 dBm以下であることを確認します。 鍵盤を弾いて、DACノイズが無いことを確認します。
20	020: SW Chk	パネルのスイッチ、LED、データダイアルのチェック。 LCDにスイッチ名が表示されますので、順番にONします。 スイッチをONすると、決められた音程で発音します。又、LEDのあるスイッチの場合は、当該のLEDが点灯します。また、データダイアルを回すと0～100までの数値が表示されます。 LCDにOKが表示されることを確認します。
21	021: P LED	パネル全LED点灯チェック。 テストを実行して、パネルの全てのLEDが点灯することを確認します。
28	028: LCD On	LCD全点灯チェック。 テストを実行して、LCDの全てのドッドが点灯し、画面が黒くなることを確認します。
29	029: LCD Off	LCD全消灯チェック。 テストを実行して、LCDの全てのドッドが消灯し、画面が白くなることを確認します。
31	031: PD1 Chk	[SASTAIN]ジャックにフットスイッチを接続します。 ペダルチェック。 テストを実行し、ペダルをONするとC3を発音し、OFFするとC4を発音します。 LCDにOKが表示されることを確認します。
33	033: PB Chk	[PITCH BEND]ホイールを手前に回し、最小にするとC3を発音し、最大にするとC4を発音します。 LCDにOKが表示されることを確認します。
37	037: MIDI Chk	MIDI IN OUTチェック。 [MIDI IN]端子と[MIDI OUT]端子をMIDIケーブルで接続して、テストを実行します。C4を発音し、LCDにOKが表示されることを確認します。
38	038: Host Chk	工場検査用のテスト
40	040: Battery Chk	電源アダプターをはずし、バッテリーをセットしてテストを実行します。 バッテリーのA/D値をチェックします。 LCDにOKが表示されることを確認します。
※41	041: Rom Chk2	ROM全アドレスチェック。 ROM (PROGRAM) をチェックします。OKが表示されることを確認します。
※42	042: Ram Chk2	RAM全アドレスチェック。 CPU のバスに接続されている全てのRAMをチェックします。 OKが表示されることを確認します。

※43	043: WRom Chk2	WAVE ROM全アドレスチェック。 OKが表示されることを確認します。
※45	045: MC Chk2	MUSIC CARTRIDGEのコネクタをチェックします。 MUSIC CARTRIDGEをCARTRIDGE SLOTに差し込みます。 OKが表示されることを確認します。
※46	046: Back Up2	RAMのバックアップチェックを行ないます。 OKが表示されることを確認します。
47	047: Factory	テストを実行すると全てのRAMを初期化して、工場出荷データにセットします。
48	048: Exit	実行すると、テストプログラムから抜けて、プレイモードになります。

注: 0 dBm = 0.775 V

※ [TEST-NO.41] ROM 全アドレスチェック～[TEST-NO.46] RAM バックアップチェックについては時間がかかりますので、時間がない場合は、[TEMPO▲]ボタンを数回押して[TEST-NO.47] FACTORY SET に進んで下さい。

■ 初期化

PSR-530のパネル上の設定は電源を入れ直すとそれぞれの初期設定に戻りますが、レジストレーションメモリーデータ、ユーザーソングデータ、ユーザースタイル、ユーザーパッド、MIDI送信設定、MIDI受信設定は、STAND BY/ONスイッチをオフにしても、電源アダプターが接続されているか、乾電池がセットされていればバックアップされています。
PSR-530のすべての設定を初期設定(工場出荷時の状態)に戻すことを「初期化」と呼びます。初期化は以下の方法で行ってください。

- 初期化を実行すると、バックアップされていた設定は、初期設定値に戻りますのでご注意ください。
- PSR-530が、何らかの原因で操作不能になったり、誤動作した場合は、一旦電源を切り、初期化の操作を行ってください。

1 **STAND BY/ON**スイッチを押して電源を切ります。

2 鍵盤の最高音(白鍵)を同時に押しながら、**STAND BY/ON**スイッチを押して電源を入れると、初期化が実行されます。初期化が完了するとディスプレイに「CLr:Back up」が表示されます。

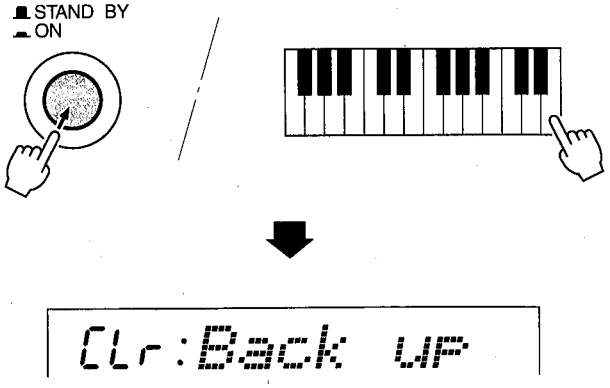

■ MIDI DATA FORMAT

Many MIDI messages listed in the MIDI Data Format are expressed in decimal numbers, binary numbers and hexadecimal numbers. Hexadecimal numbers may include the letter "H" as a suffix. Also, "n" can freely be defined as any whole number.
To enter data/values, refer to the table below.

Decimal	Hexadecimal	Binary
0	00	0000 0000
1	01	0000 0001
2	02	0000 0010
3	03	0000 0011
4	04	0000 0100
5	05	0000 0101
6	06	0000 0110
7	07	0000 0111
8	08	0000 1000
9	09	0000 1001
10	0A	0000 1010
11	0B	0000 1011
12	0C	0000 1100
13	0D	0000 1101
14	0E	0000 1110
15	0F	0000 1111
16	10	0001 0000
17	11	0001 0001
18	12	0001 0010
19	13	0001 0011
20	14	0001 0100
21	15	0001 0101
22	16	0001 0110
23	17	0001 0111
24	18	0001 1000
25	19	0001 1001
26	1A	0001 1010
27	1B	0001 1011
28	1C	0001 1100
29	1D	0001 1101
30	1E	0001 1110
31	1F	0001 1111
32	20	0010 0000
33	21	0010 0001
34	22	0010 0010
35	23	0010 0011
36	24	0010 0100
37	25	0010 0101
38	26	0010 0110
39	27	0010 0111
40	28	0010 1000
41	29	0010 1001
42	2A	0010 1010
43	2B	0010 1011
44	2C	0010 1100
45	2D	0010 1101
46	2E	0010 1110
47	2F	0010 1111
48	30	0011 0000
49	31	0011 0001
50	32	0011 0010
51	33	0011 0011
52	34	0011 0100
53	35	0011 0101
54	36	0011 0110
55	37	0011 0111
56	38	0011 1000
57	39	0011 1001
58	3A	0011 1010
59	3B	0011 1011
60	3C	0011 1100
61	3D	0011 1101
62	3E	0011 1110
63	3F	0011 1111

Decimal	Hexadecimal	Binary
64	40	0100 0000
65	41	0100 0001
66	42	0100 0010
67	43	0100 0011
68	44	0100 0100
69	45	0100 0101
70	46	0100 0110
71	47	0100 0111
72	48	0100 1000
73	49	0100 1001
74	4A	0100 1010
75	4B	0100 1011
76	4C	0100 1100
77	4D	0100 1101
78	4E	0100 1110
79	4F	0100 1111
80	50	0101 0000
81	51	0101 0001
82	52	0101 0010
83	53	0101 0011
84	54	0101 0100
85	55	0101 0101
86	56	0101 0110
87	57	0101 0111
88	58	0101 1000
89	59	0101 1001
90	5A	0101 1010
91	5B	0101 1011
92	5C	0101 1100
93	5D	0101 1101
94	5E	0101 1110
95	5F	0101 1111
96	60	0110 0000
97	61	0110 0001
98	62	0110 0010
99	63	0110 0011
100	64	0110 0100
101	65	0110 0101
102	66	0110 0110
103	67	0110 0111
104	68	0110 1000
105	69	0110 1001
106	6A	0110 1010
107	6B	0110 1011
108	6C	0110 1100
109	6D	0110 1101
110	6E	0110 1110
111	6F	0110 1111
112	70	0111 0000
113	71	0111 0001
114	72	0111 0010
115	73	0111 0011
116	74	0111 0100
117	75	0111 0101
118	76	0111 0110
119	77	0111 0111
120	78	0111 1000
121	79	0111 1001
122	7A	0111 1010
123	7B	0111 1011
124	7C	0111 1100
125	7D	0111 1101
126	7E	0111 1110
127	7F	0111 1111

- Except the table above, for example 144-159 (decimal)/9nH/1001 0000-1001 1111 (binary) displays the Note On Message for each channel (1-16). 176-191/BnH/1011 0000-1011 1111 displays the Control Change Message for each channel (1-16). 192-207/CnH/1100 0000-1100 1111 displays the Program Change Message for each channel (1-16). 240/FOH/1111 0000 denotes the start of a System Exclusive Message. 247/F7H/1111 0111 denotes the end of a System Exclusive Message.
- aaH (hexidecimal)/0aaaaaaa (binary) denotes the data address. The address contains High, Mid, and Low.
- bbH/0bbbbbbb denotes the byte count.
- ccH/0ccccccc denotes the check sum.
- ddH/0ddddddd denotes the data/value.

(1) TRANSMIT FLOW

MIDI OUT ← NOTE ON/OFF	9nH
CONTROL CHANGE	BnH
BANK SELECT MSB	BnH,00H
BANK SELECT LSB	BnH,20H
DATA ENTRY MSB	BnH,06H
DATA ENTRY LSB	BnH,26H
MAIN VOLUME	BnH,07H
PANPOT	BnH,0AH
EXPRESSION	BnH,0BH
SUSTAIN	BnH,40H
SOSTENUTE	BnH,42H
SOFT PEDAL	BnH,43H
REVERB SEND LEVEL	BnH,5BH
VARIATION SEND LEVEL	BnH,5EH
RPN LSB	BnH, 64H
RPN MSB	BnH, 65H
PITCH BEND SENS	BnH, 65H, 00H, 64H, 00H, 06H, mmH
PROGRAM CHANGE	CnH
PITCH BEND	EnH
SYSTEM EXCLUSIVE MESSAGE <YAMAHA MIDI FORMAT> <UNIVERSAL>	
UNIVERSAL REALTIME	F0H 7FH.....F7H
UNIVERSAL NON-REALTIME <XG STANDARD>	F0H 7EH.....F7H
XG PARAMETER CHANGE	F0H 43H 1nH 4CH aaH aaH aaH ddH .....ddH F7H
XG BULK DUMP	F0H 43H 0nH 4CH bbH bbH aaH aaH aaH ddH.....ddH ccH F7H
SPECIAL OPERATORS	
SYSTEM REALTIME MESSAGE	
MIDI CLOCK	F8H
START	FAH
STOP	FCH
ACTIVE SENSING	FEH

(2) RECEIVE FLOW

MIDI IN → NOTE OFF	8nH
NOTE ON/OFF	9nH
CONTROL CHANGE	
BANK SELECT MSB	BnH,00H
BANK SELECT LSB	BnH,20H
MODULATION	BnH,01H
PORTAMENTO TIME	BnH,05H
DATA ENTRY MSB	BnH,06H
DATA ENTRY LSB	BnH,26H
MAIN VOLUME	BnH,07H
PANPOT	BnH,0AH
EXPRESSION	BnH,0BH
SUSTAIN	BnH,40H
PORTAMENTO	BnH,41H
SOSTENUTO	BnH,42H
SOFT PEDAL	BnH,43H
HARMONIC CONTENT	BnH,47H
RELEASE TIME	BnH,48H
ATTACK TIME	BnH,49H
BRIGHTNESS	BnH,4AH
PORTAMENTO CONTROL	BnH,54H
REVERB SEND LEVEL	BnH,5BH
CHORUS SEND LEVEL	BnH,5DH
VARIATION SEND LEVEL	BnH,5EH
DATA INCREMENT	BnH,60H
DATA DECREMENT	BnH,61H
NRPN LSB	BnH,62H
NRPN MSB	BnH,63H
VIBRATO RATE	BnH,63H,01H,62H,08H,06H,mmH
VIBRATO DEPTH	BnH,63H,01H,62H,09H,06H,mmH
VIBRATO DELAY	BnH,63H,01H,62H,0AH,06H,mmH
FILTER CUTOFF FREQ.	BnH,63H,01H,62H,20H,06H,mmH
FILTER RESONANCE	BnH,63H,01H,62H,21H,06H,mmH
AEG ATTACK TIME	BnH,63H,01H,62H,63H,06H,mmH
AEG DECAY TIME	BnH,63H,01H,62H,64H,06H,mmH
AEG RELEASE	BnH,63H,01H,62H,66H,06H,mmH
DRUM INST	*1
CUTOFF FREQ.	BnH,63H,14H,62H,rrH,06H,mmH
FILTER RESONANCE	BnH,63H,15H,62H,rrH,06H,mmH
AEG ATTACK RATE	BnH,63H,16H,62H,rrH,06H,mmH
AEG DECAY RATE	BnH,63H,17H,62H,rrH,06H,mmH
PITCH COARSE	BnH,63H,18H,62H,rrH,06H,mmH

PITCH FINE	BnH,63H,19H,62H,rrH,06H,mmH
LEVEL	BnH,63H,1AH,62H,rrH,06H,mmH
PANPOT	BnH,63H,1CH,62H,rrH,06H,mmH
REVERB SEND	BnH,63H,1DH,62H,rrH,06H,mmH
CHORUS SEND	BnH,63H,1EH,62H,rrH,06H,mmH
VARIATION SEND	BnH,63H,1FH,62H,rrH,06H,mmH
RPN LSB	BnH,64H
RPN MSB	BnH,65H
PITCH BEND SENS.	BnH,65H,00H,64H,00H,06H,mmH
FINE TUNING	BnH,65H,00H,64H,01H,06H,mmH, 26H,llH
COARSE TUNING	BnH,65H,00H,64H,02H,06H,mmH
NULL	BnH,65H,7FH,64H,7FH
ALL SOUND OFF	BnH,78H,00H
RESET ALL CONTROLLERS	BnH,79H,00H
ALL NOTES OFF	BnH,7BH
OMNI OFF	BnH,7CH
OMNI ON	BnH,7DH
MONO	BnH,7EH
POLY	BnH,7FH
PROGRAM CHANGE	CnH
CHANNEL AFTER TOUCH	DnH
PITCH BEND CHANGE	EnH
SYSTEM EXCLUSIVE MESSAGE	
<YAMAHA MIDI FORMAT>	
<UNIVERSAL>	
UNIVERSAL REALTIME	F0H 7FH.....F7H
UNIVERSAL NON-REALTIME	F0H 4EH.....F7H
<XG STANDARD>	
XG PARAMETER CHANGE	F0H 43H 1nH 4CH aaH aaH aaH ddH .....ddH F7H
XG BULK DUMP	F0H 43H 0nH 4CH bbH bbH aaH aaH aaH ddH.....ddH ccH F7H
PARAMETER REQUEST	F0H 43H 3nH 4CH aaH aaH aaH F7H
DUMP REQUEST	F0H 43H 2nH 4CH aaH aaH aaH F7H
SPECIAL OPERATORS	
Others	
SYSTEM REALTIME MESSAGE	
MIDI CLOCK	F8H
START	FAH
STOP	FCH
ACTIVE SENSING	FEH

(3) TRANSMIT/RECEIVE DATA

(3-1) CHANNEL VOICE MESSAGES

(3-1-1) NOTE OFF (Recive only)

STATUS	1000nnnn (8nH)	n = 0 - 15 VOICE CHANNEL NUMBER
NOTE NUMBER	0kkkkkkk	k = 0 (C-2) - 127 (G8)
VELOCITY	0vvvvvvv	v: ignored

(3-1-2) NOTE ON/OFF

STATUS	1001nnnn (9nH)	n = 0 - 15 VOICE CHANNEL NUMBER
NOTE NUMBER	0kkkkkkk	k = 0 (C-2) - 127 (G8)
VELOCITY	0vvvvvvv	(v ≠ 0) NOTE ON
	00000000	(v = 0) NOTE OFF

(3-1-3) PROGRAM CHANGE

STATUS	1100nnnn (CnH)	n = 0 - 15 VOICE CHANNEL NUMBER
PROGRAM NUMBER	0ppppppp	p = 0 - 127

*** PROGRAM NUMBER: XG DRUM VOICE number correspondence**

P = 0	Standard Kit
P = 1	Standard2 Kit
P = 8	Room Kit
P = 16	Rock Kit
P = 24	Elctrnic Kit
P = 25	Analog Kit
P = 27	Dance Kit
P = 32	Jazz Kit
P = 40	Brush Kit
P = 48	Classic Kit

*** PROGRAM NUMBER: XG SFX KIT number correspondence**

P = 1	SFX1 Kit
P = 2	SFX2 Kit

When DRUM VOICE is selected and program change data for a different DRUM VOICE is received, the currently selected DRUM VOICE will be replaced with the new DRUM VOICE.

(3-1-4) CHANNEL AFTER TOUCH (Recive only)

STATUS	1101nnnn (DnH)	n = 0 - 15 VOICE CHANNEL NUMBER
VALUE	0vvvvvvv	v = 0 - 127 AFTER TOUCH VALUE

(3-1-5) PITCH BEND CHANGE

STATUS	1110nnnn (EnH)	n = 0 - 15 VOICE CHANNEL NUMBER
LSB	0vvvvvvv	PITCH BEND CHANGE LSB
MSB	0vvvvvvv	PITCH BEND CHANGE MSB

(3-1-6) CONTROL CHANGE

STATUS	1011nnnn (BnH)	n = 0 - 15 VOICE CHANNEL NUMBER
CONTROL NUMBER	0ccccccc	
CONTROL VALUE	0vvvvvvv	

*** Transmit CONTROL NUMBER.**

c = 0	BANK SELECT MSB	; v = 0:XG NORMAL, 64:SFX NORMAL, 126:XG SFX KIT, 127:XG DRUM	
c = 32	BANK SELECT LSB	; v = 0 - 127	*3
c = 6	DATA ENTRY MSB	; v = 0 - 127	*1
c = 38	DATA ENTRY LSB	; v = 0 - 127	*1
c = 7	MAIN VOLUME	; v = 0 - 127	
c = 10	PANPOT	; v = 0 - 127	
c = 11	EXPRESSION	; v = 0 - 127	
c = 64	SUSTAIN	; v = 0-63:OFF , 64-127:ON	*2
c = 66	SOSTENUTO	; v = 0-63:OFF , 64-127:ON	*2
c = 67	SOFT PEDAL	; v = 0-63:OFF , 64-127:ON	*2
c = 91	REVERB SEND LEVEL	; v = 0 - 127	
c = 94	VARIATION SEND LEVEL	; v = 0 - 127	

*** Receive CONTROL NUMBER.**

c = 0	BANK SELECT MSB	; v = 0:XG NORMAL, 64:SFX NORMAL, 126:XG SFX KIT, 127:XG DRUM	
c = 32	BANK SELECT LSB	; v = 0 - 127	*3
c = 1	MODULATION	; v = 0 - 127	*2
c = 5	PORTAMENTO TIME	; v = 0 - 127	*2
c = 6	DATA ENTRY MSB	; v = 0 - 127	*1
c = 38	DATA ENTRY LSB	; v = 0 - 127	*1
c = 7	MAIN VOLUME	; v = 0 - 127	
c = 10	PANPOT	; v = 0 - 127	
c = 11	EXPRESSION	; v = 0 - 127	
c = 64	SUSTAIN	; v = 0-63:OFF , 64-127:ON	*2
c = 65	PORTAMENTO	; v = 0-63:OFF , 64-127:ON	*2
c = 66	SOSTENUTO	; v = 0-63:OFF , 64-127:ON	*2
c = 67	SOFT PEDAL	; v = 0-63:OFF , 64-127:ON	*2
c = 71	HARMONIC CONTENT	; v = 0:-64 - 64:0 - 127:+63	*2
c = 72	RELEASE TIME	; v = 0:-64 - 64:0 - 127:+63	*2
c = 73	ATTACK TIME	; v = 0:-64 - 64:0 - 127:+63	*2
c = 74	BRIGHTNESS	; v = 0:-64 - 64:0 - 127:+63	*2
c = 84	PORTAMENT CONTROL	; v = 0 - 127	*2
c = 91	REVERB SEND LEVEL	; v = 0 - 127	
c = 93	CHORUS SEND LEVEL	; v = 0 - 127	
c = 94	VARIATION SEND LEVEL	; v = 0 - 127 (When only Connection = 1[System])	
c = 96	DATA INCREMENT	; v = 127	*1
c = 97	DATA DECREMENT	; v = 127	*1

*1 Only when setting the appointed parameter with RPN, NRPN.
*2 Does not effect Rhythm Voice.
*3 MSB=0, anything other than 63 is 0.

- Until a PROGRAM CHANGE message is received, the BANK SELECT operation will be suspended. When a Voice, including VOICE BANK, is changed, set the BANK SELECT and Program Change Message, and transmit in the following order, BANK SELECT MSB, LSB, PROGRAM CHANGE.
- MODULATION controls the Vibrato Depth.
- PORTAMENTO TIME controls the Pitch Change Speed when the Portamento Switch = ON. 0 being the shortest time, and 127 being the longest.
- PANPOT changes the value for the melody voice and rhythm voice in relation to the preset value.
- Portamento time is fixed to 0 when the PORTAMENTO CONTROL is used.
- HARMONIC CONTENT applies adjustment to the resonance value that is set by the voice. This parameter specifies relative change with the value of 64 producing 0 adjustment. As values get higher the sound becomes increasingly eccentric. Note that for some voices the effective parameter range is narrower than the legal parameter range.
- RELEASE TIME applies adjustment to the envelope release time set by the voice. This parameter specifies relative change with the value of 64 producing 0 adjustment.

- ATTACK TIME applies adjustment to the envelope attack time set by the voice. This parameter specifies relative change with the value of 64 producing 0 adjustment.
- BRIGHTNESS applies adjustment to the cut-off frequency set by the voice. This parameter specifies relative change with the value of 64 producing 0 adjustment. Lower voices produce a softer sound. For some voices the effective parameter range is narrower than the legal parameter range.

(3-2) CHANNEL MODE MESSAGES

STATUS	1011nnnn (BnH)	n = 0 - 15 VOICE CHANNEL NUMBER
CONTROL NUMBER	0ccccccc	c = CONTROL NUMBER
CONTROL VALUE	0vvvvvvv	v = DATA VALUE

(3-2-1) ALL SOUND OFF (Recive only) (CONTROL NUMBER = 78H , DATA VALUE = 0)

Switches off all sound from the channel. Does not reset Note On and Hold On conditions established by Channel Messages.

(3-2-2) RESET ALL CONTROLLERS (Recive only) (CONTROL NUMBER = 79H , DATA VALUE = 0)

Resets controllers as follows.

PITCH BEND CHANGE	0 (Center)
AFTER TOUCH	0 (min.)
MODULATION	0 (min.)
EXPRESSION	127 (max.)
SUSTAIN	0 (off)
SOSTENUTO	0 (off)
SOFT PEDAL	0 (off)
NRPN	Sets number to null. (Internal data remains unchanged)
RPN	Sets number to null. (Internal data remains unchanged)
PORTAMENT CONTROL	Resets portamento source note number
PORTAMENTO	0 (off)

(3-2-3) ALL NOTES OFF (Recive only) (CONTROL NUMBER = 7BH , DATA VALUE = 0)

Switches off all of the channel's "on" notes. However, any notes being held by SUSTAIN or SOSTENUTO continue to sound until SUSTAIN/SOSTENUTO goes off.

(3-2-4) OMNI OFF (Recive only) (CONTROL NUMBER = 7CH , DATA VALUE = 0)

Same processing as for All Notes Off.

(3-2-5) OMNI ON (Recive only) (CONTROL NUMBER = 7DH , DATA VALUE = 0)

Same processing as for All Notes Off. Omni On is not executed.

(3-2-6) MONO (Recive only) (CONTROL NUMBER = 7EH , DATA VALUE = 0-16)

Same processing as for All Notes Off. If the 3rd byte is in a range of 0-16 the corresponding channel will be changed to Mode 4 (m=1).

(3-2-7) POLY (Recive only) (CONTROL NUMBER = 7FH , DATA VALUE = 0)

Same processing as for All Sounds Off and the corresponding channel will be changed to Mode 3.

(3-3) REGISTERED PARAMETER NUMBER (RPN)

STATUS	1011nnnn (BnH)	n = 0 - 15 VOICE CHANNEL NUMBER
RPN LSB	01100100 (64H)	
RPN LSB NUMBER	0ppppppp	p = RPN LSB (refer to the list below)
RPN MSB	01100101 (65H)	
RPN MSB NUMBER	0qqqqqqq	q = RPN MSB (refer to the list below)
DATA ENTRY MSB	00000110 (06H)	
DATA VALUE	0mmmmmmm	m = Data Value
DATA ENTRY LSB	00100110 (26H)	
DATA VALUE	0lllllll	l = Data Value

First appoints the parameter for RPN MSB/LSB, then sets the parameter value for data entry MSB/LSB.

RPN LSB	RPN MSB	D.ENTRY LSB	D.ENTRY MSB	PARAMETER NAME	DATA RANGE
00H	00H	mmH	—	PITCH BEND SENSITIVITY	00H - 18H (0 - 24 semitones)
01H	00H	mmH	llH	FINE TUNE	{mmH,llH} = {00H,00H} - {40H,00H} - {7FH,7FH} (-8192*100/8192) - 0 - (+8192*100/8192)
02H	00H	mmH	—	COARSE TUNE	28H - 40H - 58H (-24 - 0 - +24 semitones)
7FH	7FH	—	—	NULL	

Clears the current RPN number setting. Does not change the internal parameter settings.

(3-4) NON-REGISTERED PARAMETER NUMBER (NRPN) (Recive only)

STATUS	1011nnnn (BnH)	n = 0 - 15 VOICE CHANNEL NUMBER
NRPN LSB	01100010 (62H)	
NRPN LSB NUMBER	0ppppppp	p = NRPN LSB (refer to the list below)
NRPN MSB	01100011 (63H)	
NRPN MSB NUMBER	0qqqqqqq	q = NRPN MSB (refer to the list below)
DATA ENTRY MSB	00000110 (06H)	
DATA VALUE	0mmmmmmm	m = Data Value

First appoints the parameter for NRPN MSB/LSB, then sets the parameter value for data entry MSB/LSB.

NRPN MSB	NRPN LSB	D.ENTRY MSB	D.ENTRY LSB	PARAMETER NAME	DATA RANGE
01H	08H	mmH	—	VIBRATO RATE	00H - 40H - 7FH (-64 - 0 - +63)
01H	09H	mmH	—	VIBRATO DEPTH	00H - 40H - 7FH (-64 - 0 - +63)
01H	0AH	mmH	—	VIBRATO DELAY	00H - 40H - 7FH (-64 - 0 - +63)
01H	20H	mmH	—	FILTER CUTOFF FREQUENCY	00H - 40H - 7FH (-64 - 0 - +63)
01H	21H	mmH	—	FILTER RESONANCE	00H - 40H - 7FH (-64 - 0 - +63)
01H	63H	mmH	—	EG ATTACK TIME	00H - 40H - 7FH (-64 - 0 - +63)
01H	64H	mmH	—	EG DECAY TIME	00H - 40H - 7FH (-64 - 0 - +63)
01H	66H	mmH	—	EG RELEASE	00H - 40H - 7FH (-64 - 0 - +63)
14H	rrH	mmH	—	DRUM FILTER CUTOFF FREQ.	00H - 40H - 7FH (-64 - 0 - +63)
15H	rrH	mmH	—	DRUM FILTER RESONANCE	00H - 40H - 7FH (-64 - 0 - +63)
16H	rrH	mmH	—	DRUM AEG ATTACK RATE	00H - 40H - 7FH (-64 - 0 - +63)
17H	rrH	mmH	—	DRUM AEG DECAY RATE	00H - 40H - 7FH (-64 - 0 - +63)
18H	rrH	mmH	—	DRUM PITCH COARSE	00H - 40H - 7FH (-64 - 0 -+63)
19H	rrH	mmH	—	DRUM PITCH FINE	00H - 40H - 7FH (-64 - 0 - +63)
1AH	rrH	mmH	—	DRUM LEVEL	00H - 7FH (0 - max.)
1CH	rrH	mmH	—	DRUM PANPOT	00H ,01H - 40H - 7FH (random,left - center - right)
1DH	rrH	mmH	—	DRUM REVERB SEND LEVEL	00H - 7FH (0 - max.)
1EH	rrH	mmH	—	DRUM CHORUS SEND LEVEL	00H - 7FH (0 - max.)
1FH	rrH	mmH	—	DRUM VARIATION SEND LEVEL	00H - 7FH (0 - max.)

The MSG14H-1FH (for drums) message is accepted as long as the channel is set with a drum voice.
rrH : drum instrument note number

(3-5) SYSTEM REALTIME MESSAGES

(3-5-1) MIDI CLOCK

STATUS 11111000 (F8H)

Transmission: 96 clocks per measure are transmitted.
Reception: If the instrument's clock is set to external, after FAH is received from the external device the instrument's clock will sync with the 96 beats per measure received from the external device.
Decides whether the internal clock, or Timing Clocks received via the MIDI IN will be used.

(3-5-2) START

STATUS 11111010 (FAH)

Transmission: Transmitted when instrument's Auto accompaniment or Song playback is started.
Reception: Depending upon the condition, Auto accompaniment, Song Playback, or Song Rec will start. FAH can only be received when External Clock is ON.

(3-5-3) STOP

STATUS 11111100 (FCH)

Transmission: Transmitted when instrument's Rhythm or Song playback is stopped.
Reception: Depending upon the condition, Rhythm, Song Playback, or Song Rec will stop.

(3-5-4) ACTIVE SENSING

STATUS 11111110 (FEH)

Transmission: Transmitted approximately once every 200msec.
Reception: Sensing is started once this Code is received. If Status or Data is not received within 400ms, the MIDI Receive Buffer will be cleared, and all notes, including those being sustained, will be cut OFF. Also, all control values will be reset to their factory defaults.

(3-6) SYSTEM EXCLUSIVE MESSAGE

(3-6-1) YAMAHA MIDI FORMAT

(3-6-1-1) SECTION CONTROL

binary	hexadecimal	
11110000	F0	Exclusive status
01000011	43	YAMAHA ID
01111110	7E	Style
00000000	00	
0sssssss	SS	Switch No.
		00H : INTRO A
		01H~07H : INTRO B
		08H : MAIN A
		09H~0FH : MAIN B
		10H : FILL IN AA
		11H~17H : FILL IN BB
		18H : FILL IN AB
		19H~1FH : FILL IN BA
		20H : ENDING A
		21H~27H : ENDING B
0ddddddd	DD	Switch On/Off : 00H (Off),7FH (On)
11110111	F7	End of Exclusive

When an ON code is received, the appointed section will be changed.

(3-6-1-2) TEMPO CONTROL

binary	hexadecimal	
11110000	F0	Exclusive status
01000011	43	YAMAHA ID
01111110	7E	Style
00000000	01	
0ttttttt	TT	Tempo4
0ttttttt	TT	Tempo3
0ttttttt	TT	Tempo2
0ttttttt	TT	Tempo1
11110111	F7	End of Exclusive

The internal clock will be set to the received Tempo value.
Tempo Meta Event is a large data block (24-bit), it is divided into 4 groups with 7-bits going into each of the Tempos 1-4 (4 receives the remaining 3 bits).

(3-6-2) UNIVERSAL SYSTEM EXCLUSIVE

(3-6-2-1) UNIVERSAL REALTIME MESSAGE

(3-6-2-1-1) MIDI MASTER VOLUME (Recive only)

binary	hexadecimal	
11110000	F0	Exclusive status
01111110	7F	Universal Realtime
01111111	7F	ID of target Device
00001001	04	Sub-ID #1=Device Control Message
00000001	01	Sub-ID #2=Master Volume
0sssssss	SS	Volume LSB
0ttttttt	TT	Volume MSB
11110111	F7	End of Exclusive
or		
11110000	F0	Exclusive status
01111110	7F	Universal Realtime
0xxxnnnn	XN	When N is received N=0-F, whichever is received. When N is transmitted N always=0. X = don't care
00001001	04	Sub-ID #1=Device Control Message
00000001	01	Sub-ID #2=Master Volume
0sssssss	SS	Volume LSB
0ttttttt	TT	Volume MSB
11110111	F7	End of Exclusive

The volume for all channels will be changed simultaneously.
The TT value is used as the MIDI Master Volume value. (the ss value is ignored.)

(3-6-2-2) UNIVERSAL NON REALTIME MESSAGE

(3-6-2-2-1) GENERAL MIDI SYSTEM ON

binary	hexadecimal	
11110000	F0	Exclusive status
01111110	7E	Universal Non-Realtime
01111111	7F	ID of target Device
00001001	09	Sub-ID #1=General MIDI Message
00000001	01	Sub-ID #2=General MIDI On
11110111	F7	End of Exclusive
or		
11110000	F0	Exclusive status
01111110	7E	Universal Non-Realtime
0xxxnnnn	XN	When N is received N=0-F, whichever is received. When N is transmitted N always=0. X = don't care
00001001	09	Sub-ID #1=General MIDI Message
00000001	01	Sub-ID #2=General MIDI On
11110111	F7	End of Exclusive

Depending upon the received ON message, the System Mode will be changed to XG.
Except MIDI Master Tuning, all control data be reset to default values.
This message requires approximately 50ms to execute, so sufficient time should be allowed before the next message is sent.
The bank select message for the channel 10 and the NRPN messages are not received in the GM mode.

(3-6-3) XG STANDARD

(3-6-3-1) XG PARAMETER CHANGE

(3-6-3-1-1) XG SYSTEM ON

binary	hexadecimal	
11110000	F0	Exclusive status
01000011	43	YAMAHA ID
0001nnnn	1N	Device Number
01001100	4C	Model ID
00000000	00	Address High
00000000	00	Address Mid
01111110	7E	Address Low
00000000	00	Data
11110111	F7	End of Exclusive

Depending upon the received ON message, the SYSTEM MODE will be changed to XG.Controllers will be reset, all values of Multi Part and Effect, and All System values denoted by "XG" data within All System will be reset to default values in the table.
This message requires approximately 50ms to execute, so sufficient time should be allowed before the next message is sent.

(3-6-3-1-2) XG PARMETER CHANGE

binary	hexadecimal	
11110000	F0	Exclusive status
01000011	43	YAMAHA ID
0001nnnn	1N	Device Number
01001100	4C	Model ID
0aaaaaaa	AA	Address High
0aaaaaaa	AA	Address Mid
0aaaaaaa	AA	Address Low
0ddddddd	DD	Data
!	!	
11110111	F7	End of Exclusive

For parameters with data size of 2 or 4, transmit the appropriate number of data bytes.
For more information on Address and Parameters, refer to < Table 1-2 > ~ < Table 1-6 > **(pages 42-45)**.
The 4 data types listed below are transmitted and received.

(These are transmitted only after a Parameter change request is received.)
XG System Data
Multi Effect Data
Multi Part Data
Drums Setup Data

(3-6-3-2) XG BULK DUMP

binary	hexadecimal	
11110000	F0	Exclusive status
01000011	43	YAMAHA ID
0000nnnn	0N	Device Number
01001100	4C	Model ID
0bbbbbbb	BB	ByteCount
0bbbbbbb	BB	ByteCount
0aaaaaaa	AA	Address High
0aaaaaaa	AA	Address Mid
0aaaaaaa	AA	Address Low
0ddddddd	DD	Data
!	!	
0ccccccc	CC	Check sum
11110111	F7	End of Exclusive

For more information on Address and Byte Count, refer to < Table 1-2 > ~ < Table 1-6 > **(pages 42-45)**.
The Check Sum value is set such that the sum of Byte Count, Address, Data, and Check Sum has value zero in its seven least significant bits.
If the top of the block is appointed to the Address the XG Bulk Dump, Bulk Request will be received.
The Block is a unit that consists of the data, arranged in the list, as the Total Size.

The 5 data types listed below are transmitted and received.
(These are transmitted only after a Bulk Dump request is received.)
System Data
Multi Effect Data (Individual effect unit)
Multi Part Data (Individual part unit)
Drums Setup Data (Individual note unit)
System Information (Individual only)

(3-6-3-3) XG PARAMETER REQUEST (Recive only)

binary	hexadecimal	
11110000	F0	Exclusive status
01000011	43	YAMAHA ID
0011nnnn	3n	Device Number
01001100	4C	Model ID
0aaaaaaa	AA	Address High
0aaaaaaa	AA	Address Mid
0aaaaaaa	AA	Address Low
11110111	F7	End of Exclusive

For more information on Address and Byte Count refer to < Table 1-2 > ~ < Table 1-6 > **(pages 42-45)**.
The 4 data types listed below are received.
System Data
Multi Effect Data
Multi Part Data
Drums Setup Data

(3-6-3-4) XG DUMP REQUEST (Recive only)

binary	hexadecimal	
11110000	F0	Exclusive status
01000011	43	YAMAHA ID
0010nnnn	2n	Device Number
01001100	4C	Model ID
0aaaaaaa	AA	Address High
0aaaaaaa	AA	Address Mid
0aaaaaaa	AA	Address Low
11110111	F7	End of Exclusive

For more information on Address and Byte Count refer to < Table 1-2 > ~ < Table 1-6 > **(pages 42-45)**.

The 5 data types listed below are received.

System Data
Multi Effect Data (Individual module unit)
Multi Part Data (Individual part unit)
Drums Setup Data (Individual note unit)
System Information

(3-6-4) SPECIAL OPERATORS

(3-6-4-1) VOLUME ,EXPRESSION AND PAN REALTIME CONTROL OFF

binary	hexadecimal	
11110000	F0	Exclusive status
01000011	43	YAMAHA ID
01110011	73	Clavinova ID
01000101	45	CVP-98/96/94/92 ID
00010001	11	Sub ID
0000nnnn	0N	N = MIDI Channel
01001001	45	Volume and Expression Realtime Control Off
0vvvvvvv	VV	Value VV: 00H=on, 7FH=off
11110111	F7	End of Exclusive

When "On" is received, subsequent volume, expression, and PAN changes are only valid after the reception of the next key on. Normal operation resumes when "Off" is received.

(3-6-5) Others

(3-6-5-1) MIDI MASTER TUNING (Recive only)

binary	hexadecimal	
11110000	F0	Exclusive status
01000011	43	YAMAHA ID
0001nnnn	1N	When N is received N=0-F, whichever is received.
00100111	27	Model ID
00110000	30	Sub ID
00000000	00	
00000000	00	
0mmmmmmm	MM	Master Tune MSB
0lllllll	LL	Master Tune LSB
0ccccccc	CC	don't care
11110111	F7	End of Exclusive

Changes tuning of all channels.
MM, LL values are used to define the MIDI Master Tuning value.

T = M-128

T : Tuning value (-100cent - +100cent)
M : A single byte value (28-228) consists of bytes 0-3 of MM = MSB, bytes 0-3 of LL = LSB.

In this setting, GM System ON, XG System ON will not be reset.

(3-6-5-2) Bulk Dump

User Song, User Style

binary	hexadecimal	
11110000	F0	Exclusive status
01000011	43	YAMAHA ID
01110011	73	Clavinova ID
01001011	4B	Model ID (PSR-530)
00110000	06	Bulk ID
0kkkkkkk	KK	Bulk No. (0AH;User Song, 07H;User Style)
0000llll	0L	Data Length
0000llll	0L	Data Length
0000llll	0L	Data Length
0000llll	0L	Data Length
0000llll	0L	Data Length
0000llll	0L	Data Length (Date Length=LLLLLL HByte
0ddddddd	DD	Bulk Data
:	:	
0ccccccc	CC	Check Sum
11110111	F7	End of Exclusive

Multi Pad, Registration Memory

binary	hexadecimal	
11110000	F0	Exclusive status
01000011	43	YAMAHA ID
01110011	73	Clavinova ID
01001011	4B	Model ID (PSR-530)
00110000	06	Bulk ID
0kkkkkkk	KK	Bulk No.(08H;Multi Pad, 09H;Registration Memory)
0000llll	0L	Data Length
0000llll	0L	Data Length
0000llll	0L	Data Length
0000llll	0L	Data Length (Date Length=LLLL HByte)
0ddddddd	DD	Bulk Data
:	:	
0ccccccc	CC	Check Sum
11110111	F7	End of Exclusive

Bulk data cannot be sent when:
- in the Record Modes (Song, Style, Pad).
- song playback.
- accompaniment playback.
- multi pad playback.
- changing the registration number.

Bulk data cannot be received when:
- in the Record Modes (Song, Style, Pad).
- a frame appears around the voice icons and an user song is selected.
- song playback.
- accompaniment playback.
- multi pad playback.
- changing the registration number.

< Table 1-1> Parmeter Basic Address

	Parameter Change Address (H) (M) (L)	Description
SYSTEM	00 00 00	System
	00 00 7D	Drum Setup Reset
	00 00 7E	XG System On
	00 00 7F	All Parameter Reset
INFORMATION	01 00 00	System Information
EFFECT 1	02 01 00	Effect1 (Reverb,Chorus,Variation)
MULTI PART	08 00 00	Multi Part 1
	:	
	08 0F 00	Multi Part 16
	08 10 00	Reserved
	: : :	:
DRUM	30 0B 00	Drum Setup 1 ⟶ Address / Parameter
	31 0B 00	Drum Setup 2
		: / :
		3n 0B 00 note number 13
		3n 0C 00 note number 14
		: / :
		3n 5B 00 note number 91

< Table 1-2 > MIDI Parameter Change table (SYSTEM) (With XG, GM On, it will not reset.)

Address (H)			Size (H)	Data (H)	Parameter Name	Description	Default Value (H)
00	00	00	4	0000	Master Tune	-102.4..+102.3[cent]	00 04 00 00
		01		..07FF		1st bit3-0 -> bit15-12	(0400)
		02				2nd bit3-0 -> bit11-8	(With XG, GM On, it will not reset.)
		03				3rd bit3-0 -> bit7-4	
						4th bit3-0 -> bit3-0	
		04	1	00..7F	Master Volume	0..127	7F
		05	1		Not Used		
		06	1	28..58	Transpose	-24..+24[semitones]	40
		7D		n	Drum Setup Reset	n=Drum Setup Number	
		7E		00	XG System On	00=XG Sytem on	
		7F		00	All Parameter Reset	00=on (receive only)	

TOTAL SIZE 6

< Table 1-3 > MIDI Parameter table (System information) (Transmitted by Dump Request. Not received. Bulk Dump Only)

Address (H)			Size (H)	Data (H)	Parameter Name	Description
01	00	00	E	20..7F	Model Name	32..127 (ASCII)
		:				
		0D				
		0E	1	00		
		0F	1	00		

TOTAL SIZE 10
(Transmitted by Dump Request. Not received. Bulk Dump Only)

< Table 1-4 > MIDI Parameter Change table (EFFECT 1)

Address (H)			Size (H)	Data (H)	Parameter Name	Description	Default Value (H)
02	01	00	2	00..7F	Reverb Type MSB	Refer to the Effect Type List	01 (=HALL1)
				00..7F	Reverb Type LSB	: basic type	00
		02	1	00..7F	Reverb Parameter 1	Refer to the Effect Parameter List	Depend on Reverb type
		03	1	00..7F	Reverb Parameter 2	Refer to the Effect Parameter List	Depend on Reverb type
		04	1	00..7F	Reverb Parameter 3	Refer to the Effect Parameter List	Depend on Reverb type
		05	1	00..7F	Reverb Parameter 4	Refer to the Effect Parameter List	Depend on Reverb type
		06	1	00..7F	Reverb Parameter 5	Refer to the Effect Parameter List	Depend on Reverb type
		07	1	00..7F	Reverb Parameter 6	Refer to the Effect Parameter List	Depend on Reverb type
		08	1	00..7F	Reverb Parameter 7	Refer to the Effect Parameter List	Depend on Reverb type
		09	1	00..7F	Reverb Parameter 8	Refer to the Effect Parameter List	Depend on Reverb type
		0A	1	00..7F	Reverb Parameter 9	Refer to the Effect Parameter List	Depend on Reverb type
		0B	1	00..7F	Reverb Parameter 10	Refer to the Effect Parameter List	Depend on Reverb type
		0C	1	00..7F	Reverb Return	-∞..0..+6dB (0..96..127)	60
		0D	1	01..7F	Reverb Pan	L63..C..R63 (1..64..127)	40

TOTAL SIZE 0E

02	01	10	1	00..7F	Reverb Parameter 11	Refer to the Effect Parameter List	Depend on Reverb type
		11	1	00..7F	Reverb Parameter 12	Refer to the Effect Parameter List	Depend on Reverb type
		12	1	00..7F	Reverb Parameter 13	Refer to the Effect Parameter List	Depend on Reverb type
		13	1	00..7F	Reverb Parameter 14	Refer to the Effect Parameter List	Depend on Reverb type
		14	1	00..7F	Reverb Parameter 15	Refer to the Effect Parameter List	Depend on Reverb type
		15	1	00..7F	Reverb Parameter 16	Refer to the Effect Parameter List	Depend on Reverb type

TOTAL SIZE 6

02	01	20	2	00..7F	Chorus Type MSB	Refer to the Effect Type List	
				00..7F	Chorus Type LSB	: basic type	00
		22	1	00..7F	Chorus Parameter 1	Refer to the Effect Parameter List	Depend on Chorus Type
		23	1	00..7F	Chorus Parameter 2	Refer to the Effect Parameter List	Depend on Chorus Type
		24	1	00..7F	Chorus Parameter 3	Refer to the Effect Parameter List	Depend on Chorus Type
		25	1	00..7F	Chorus Parameter 4	Refer to the Effect Parameter List	Depend on Chorus Type
		26	1	00..7F	Chorus Parameter 5	Refer to the Effect Parameter List	Depend on Chorus Type
		27	1	00..7F	Chorus Parameter 6	Refer to the Effect Parameter List	Depend on Chorus Type
		28	1	00..7F	Chorus Parameter 7	Refer to the Effect Parameter List	Depend on Chorus Type
		29	1	00..7F	Chorus Parameter 8	Refer to the Effect Parameter List	Depend on Chorus Type
		2A	1	00..7F	Chorus Parameter 9	Refer to the Effect Parameter List	Depend on Chorus Type
		2B	1	00..7F	Chorus Parameter 10	Refer to the Effect Parameter List	Depend on Chorus Type
		2C	1	00..7F	Chorus Return	-∞..0..+6dB (0..96..127)	60
		2D	1	01..7F	Chorus Pan	L63..C..R63 (1..64..127)	40
		2E	1	00..7F	Send Chorus To Reverb	-∞..0..+6dB (0..96..127)	00

TOTAL SIZE 0F

Address (H)			Size (H)	Data (H)	Parameter Name	Description	Default Value (H)
02	01	30	1	00..7F	Chorus Parameter 11	Refer to the Effect Parameter List	Depend on Chorus Type
		31	1	00..7F	Chorus Parameter 12	Refer to the Effect Parameter List	Depend on Chorus Type
		32	1	00..7F	Chorus Parameter 13	Refer to the Effect Parameter List	Depend on Chorus Type
		33	1	00..7F	Chorus Parameter 14	Refer to the Effect Parameter List	Depend on Chorus Type
		34	1	00..7F	Chorus Parameter 15	Refer to the Effect Parameter List	Depend on Chorus Type
		35	1	00..7F	Chorus Parameter 16	Refer to the Effect Parameter List	Depend on Chorus Type
TOTAL SIZE 6							
02	01	40	2	00..7F	Variation Type MSB	Refer to the Effect Type List	
				00..7F	Variation Type LSB	: basic type	00
		42	2	00..7F	Vari. Param. 1 MSB	Refer to the Effect Parameter List	Depend on Vari. Type
				00..7F	Vari. Param. 1 LSB	Refer to the Effect Parameter List	Depend on Vari. Type
		44	2	00..7F	Vari. Param. 2 MSB	Refer to the Effect Parameter List	Depend on Vari. Type
				00..7F	Vari. Param. 2 LSB	Refer to the Effect Parameter List	Depend on Vari. Type
		46	2	00..7F	Vari. Param. 3 MSB	Refer to the Effect Parameter List	Depend on Vari. Type
				00..7F	Vari. Param. 3 LSB	Refer to the Effect Parameter List	Depend on Vari. Type
		48	2	00..7F	Vari. Param. 4 MSB	Refer to the Effect Parameter List	Depend on Vari. Type
				00..7F	Vari. Param. 4 LSB	Refer to the Effect Parameter List	Depend on Vari. Type
		4A	2	00..7F	Vari. Param. 5 MSB	Refer to the Effect Parameter List	Depend on Vari. Type
				00..7F	Vari. Param. 5 LSB	Refer to the Effect Parameter List	Depend on Vari. Type
		4C	2	00..7F	Vari. Param. 6 MSB	Refer to the Effect Parameter List	Depend on Vari. Type
				00..7F	Vari. Param. 6 LSB	Refer to the Effect Parameter List	Depend on Vari. Type
		4E	2	00..7F	Vari. Param. 7 MSB	Refer to the Effect Parameter List	Depend on Vari. Type
				00..7F	Vari. Param. 7 LSB	Refer to the Effect Parameter List	Depend on Vari. Type
		50	2	00..7F	Vari. Param. 8 MSB	Refer to the Effect Parameter List	Depend on Vari. Type
				00..7F	Vari. Param. 8 LSB	Refer to the Effect Parameter List	Depend on Vari. Type
		52	2	00..7F	Vari. Param. 9 MSB	Refer to the Effect Parameter List	Depend on Vari. Type
				00..7F	Vari. Param. 9 LSB	Refer to the Effect Parameter List	Depend on Vari. Type
		54	2	00..7F	Vari. Param. 10 MSB	Refer to the Effect Parameter List	Depend on Vari. Type
				00..7F	Vari. Param. 10 LSB	Refer to the Effect Parameter List	Depend on Vari. Type
		56	1	00..7F	Variation Return	-∞..0..+6dB (0..96..127)	60
		57	1	01..7F	Variation Pan	L63..C..R63 (1..64..127)	40
		58	1	00..7F	Send Vari. To Reverb	-∞..0..+6dB (0..96..127)	00
		59	1	00..7F	Send Vari. To Chorus	-∞..0..+6dB (0..96..127)	00
		5A	1	00..01	Variation Connection	0:insertion,1:system	00
		5B	1	00..1F	Variation Part	part1..32 (0..31),off (127)	7F
		5C	1	01..7F	MW Vari. Ctrl Depth	-63..+63	40
		5D	1	01..7F	PB Vari. Ctrl Depth	-63..+63	40
		5E	1	01..7F	CAT Vari..Ctrl Depth	-63..+63	40
		5F	1	01..7F	Not Used		
		60	1	01..7F	Not Used		
TOTAL SIZE 21							
02	01	70	1	00..7F	Variation Parameter 11	option Parameter	Depend on Variation Type
		71	1	00..7F	Variation Parameter 12	option Parameter	Depend on Variation Type
		72	1	00..7F	Variation Parameter 13	option Parameter	Depend on Variation Type
		73	1	00..7F	Variation Parameter 14	option Parameter	Depend on Variation Type
		74	1	00..7F	Variation Parameter 15	option Parameter	Depend on Variation Type
		75	1	00..7F	Variation Parameter 16	option Parameter	Depend on Variation Type
TOTAL SIZE 6							

< Table 1-5 > MIDI Parameter Change table (MULTI PART)

Address (H)			Size (H)	Data (H)	Parameter Name	Description	Default Value (H)
08	nn	00	1	00..20	Element Reserve	0..32	0 (Part10),2 (Others)
	nn	01	1	00..7F	Bank Select MSB	0..127	7F (Part10),00 (Others)
	nn	02	1	00..7F	Bank Select LSB	0..127	00
	nn	03	1	00..7F	Program Number	1..128	00
	nn	04	1	00..0F, 7F	Rcv Channel	0..16;1..16,127;off	Part No.
	nn	05	1	00..01	Mono/Poly Mode	0:mono,1:poly	01
	nn	06	1	00..02	Same Note Number Key On Assign	0:single 1:multi 2:inst (for DRUM)	00
	nn	07	1	00..02	Part Mode	0:normal 1:drum,drumS1..2	00 (Except Part 10.) 02 (Part10)
	nn	08	1	28..58	Note Shift	-24..+24[semitones]	40
	nn	09	2	00..FF	Detune	-12.8..+12.7[Hz]	08 00
	nn	0A				1st bit3..0 -> bit7..4 2nd bit3..0 -> bit3..0	(80)
	nn	0B	1	00..7F	Volume	0..127	64
	nn	0C	1	00..7F	Velocity Sense Depth	0..127	40
	nn	0D	1	00..7F	Velocity Sense Offset	0..127	40
	nn	0E	1	00..7F	Pan	0:random L63..C..R63 (1..64..127)	40

Address (H)		Size (H)	Data (H)	Parameter Name	Description	Default Value (H)
nn	0F	1	00..7F	Note Limit Low	C-2..G8	00
nn	10	1	00..7F	Note Limit High	C-2..G8	7F
nn	11	1	00..7F	Dry Level	0..127	7F
nn	12	1	00..7F	Chorus Send	0..127	00
nn	13	1	00..7F	Reverb Send	0..127	28
nn	14	1	00..7F	Variation Send	0..127	00
nn	15	1	00..7F	Vibrato Rate	-64..+63	40
nn	16	1	00..7F	Vibrato Depth	-64..+63	40
nn	17	1	00..7F	Vibrato Delay	-64..+63	40
nn	18	1	00..7F	Filter Cutoff Freq.	-64..+63	40
nn	19	1	00..7F	Filter Resonance	-64..+63	40
nn	1A	1	00..7F	EG Attack Time	-64..+63	40
nn	1B	1	00..7F	EG Decay Time	-64..+63	40
nn	1C	1	00..7F	EG Release Time	-64..+63	40
nn	1D	1	28..58	MW Pitch Control	-24..+24[semitones]	40
nn	1E	1	00..7F	MW Filter Control	-9600..+9450[cent]	40
nn	1F	1	00..7F	MW Amp. Control	-100..+100[%]	40
nn	20	1	00..7F	MW LFO PMod Depth	0..127	0A
nn	21	1	00..7F	MW LFO FMod Depth	0..127	00
nn	22	1	00..7F	MW LFO AMod Depth	0..127	00
nn	23	1	28..58	Bend Pitch Control	-24..+24[semitones]	42
nn	24	1	00..7F	Bend Filter Control	-9600..+9450[cent]	40
nn	25	1	00..7F	Bend Amp. Control	-100..+100[%]	40
nn	26	1	00..7F	Bend LFO PMod Depth	0..127	00
nn	27	1	00..7F	Bend LFO FMod Depth	0..127	00
nn	28	1	00..7F	Bend LFO AMod Depth	0..127	00
TOTAL SIZE 29						
nn	30			Not Used		
	:			:		
nn	40			Not Used		
nn	41	1	00..7F	Scale Tuning C	-64..+63[cent]	40
nn	42	1	00..7F	Scale Tuning C#	-64..+63[cent]	40
nn	43	1	00..7F	Scale Tuning D	-64..+63[cent]	40
nn	44	1	00..7F	Scale Tuning D#	-64..+63[cent]	40
nn	45	1	00..7F	Scale Tuning E	-64..+63[cent]	40
nn	46	1	00..7F	Scale Tuning F	-64..+63[cent]	40
nn	47	1	00..7F	Scale Tuning F#	-64..+63[cent]	40
nn	48	1	00..7F	Scale Tuning G	-64..+63[cent]	40
nn	49	1	00..7F	Scale Tuning G#	-64..+63[cent]	40
nn	4A	1	00..7F	Scale Tuning A	-64..+63[cent]	40
nn	4B	1	00..7F	Scale Tuning A#	-64..+63[cent]	40
nn	4C	1	00..7F	Scale Tuning B	-64..+63[cent]	40
nn	4D	1	28..58	CAT Pitch Control	-24..+24[semitones]	40
nn	4E	1	00..7F	CAT Filter Control	-9600..+9450[cent]	40
nn	4F	1	00..7F	CAT Amplitude Control	-100..+100[%]	40
nn	50	1	00..7F	CAT LFO PMod Depth	0..127	00
nn	51	1	00..7F	CAT LFO FMod Depth	0..127	00
nn	52	1	00..7F	CAT LFO AMod Depth	0..127	00
nn	53			Not Used		
	:			:		
	66			Not Used		
nn	67	1	00..01	Portamento Switch	off/on	00
nn	68	1	00..7F	Portamento Time	0..127	00
nn	69			Not Used		
	:			:		
	6E			Not Used		
TOTAL SIZE 3F						

nn = PartNumber

If there is a Drum Voice assigned to the Part, the following parameters are ineffective.

- Bank Select LSB
- Amp EG
- Portamento
- Soft Pedal
- Mono/Poly
- Scale Tuning

< Table 1-6 > MIDI Parameter Change table (DRUM SETUP)

Address (H)			Size (H)	Data (H)	Parameter Name	Description	Default Value (H)
3n	rr	00	1	00..7F	Pitch Coarse	-64..+63	40
3n	rr	01	1	00..7F	Pitch Fine	-64..+63[cent]	40
3n	rr	02	1	00..7F	Level	0..127	Depend on the Note
3n	rr	03	1	00..7F	Alternate Group	0:off,1..127	Depend on the Note
3n	rr	04	1	00..7F	Pan	0:random L63..C..R63 (1..64..127)	Depend on the Note
3n	rr	05	1	00..7F	Reverb Send Level	0..127	Depend on the Note
3n	rr	06	1	00..7F	Chorus Send Level	0..127	Depend on the Note
3n	rr	07	1	00..7F	Variation Send Level	0..127	7F
3n	rr	08	1	00..01	Key Assign	0:single,1:multi	00
3n	rr	09	1	00..01	Rcv Note Off	off/on	Depend on the Note
3n	rr	0A	1	00..01	Rcv Note On	off/on	01
3n	rr	0B	1	00..7F	Filter Cutoff Freq.	-64..63	40
3n	rr	0C	1	00..7F	Filter Resonance	-64..63	40
3n	rr	0D	1	00..7F	EG Attack Rate	-64..63	40
3n	rr	0E	1	00..7F	EG Decay1 Rate	-64..63	40
3n	rr	0F	1	00..7F	EG Decay2 Rate	-64..63	40

TOTAL SIZE 10

n:Drum Setup Number (0 - 1)
rr:note number (0DH - 5BH)
If XG SYSTEM ON and/or GM On message is received, all Drum Setup Parameter will be reset to default values.
According to the Drum Setup Reset message, individual Drum Setup Parameters can be reset to default values.

< Table 1-7 > Effect Type List

XG ESSENTIAL EFFECT
Same as LSB=0
XG OPTION EFFECT

* If the received value does not contain an effect type in the TYPE LSB, the LSB will be directed to TYPE 0.
* Panel Effects are based on the "[Number] Effect Name".
* Using an external sequencer, capable of editing and transmitting the system exclusive messages and parameter changes, allows you to select the reverb, chorus and DSP effect types which are not accessible from the PSR-530 panel operation. When one of the effects is selected by the external sequencer, "XG Rev.," "XG Cho." or "XG Eff." will be shown on the display.

REVERB TYPE

TYPE MSB	TYPE LSB 00	01	02	03...07	08	09...15	16	17	18	19	20	21...
000	NO EFFECT											
001	[1]HALL1	HALL2					[2]HALL2	[3]HALL3	[4]HALL4			
002	ROOM1	ROOM2	ROOM3				[5]ROOM1	[6]ROOM2	[7]ROOM3	[8]ROOM4		
003	STAGE1	STAGE2					[9]STAGE1	[10]STAGE2				
004	PLATE						[11]PLATE1	[12]PLATE2				
005...015	NO EFFECT											
016												
017												
018												
019												
020...127	NO EFFECT											

CHORUS TYPE

TYPE MSB	TYPE LSB 00	01	02	03...07	08	09...15	16	17	18	19	20	21...
000	NO EFFECT											
001...064	NO EFFECT											
065	CHORUS1	CHORUS2	[5]CHORUS5									
066	CELESTE1	[4]CHORUS4	CELESTE3				[3]CHORUS3	[1]CHORUS1				
067	FLANGER 1	[9]FLANGER 4					[7]FLANGER2	[8]FLANGER3				
068...127	NO EFFECT											

DSP TYPE (0 — 63)

TYPE MSB	TYPE LSB 00	01	02	03...07	08	09...15	16	17	18	19	20	21...
000	NO EFFECT											
001	[1]HALL1	HALL2					[2]HALL2	[3]HALL3	[4]HALL4			
002	ROOM1	ROOM2	ROOM3				[5]ROOM1	[6]ROOM2	[7]ROOM3	[8]ROOM4		
003	STAGE1	STAGE2					[9]STAGE1	[10]STAGE2				
004	PLATE						[11]PLATE1	[12]PLATE2				
005	"DELAY L,C,R"						[38]Delay LCR					
006	"[39]DELAY L,R"											
007	[40]ECHO											
008	[41]CROSS DELAY											
009	[13]ER1	[14]ER2										
010	[15]GATE REVERB											
011	[16]REVERS GATE											
012...019	NO EFFECT or THRU											
020	KARAOKE 1	KARAOKE 2	KARAOKE 3									
021...063	NO EFFECT or THRU*											

DSP TYPE (64 — 127)

TYPE MSB	TYPE LSB 00	01	02	03...07	08	09...15	16	17	18	19	20	21...
064	THRU											
065	CHORUS1	CHORUS2	[21]CHORUS5		CHORUS3							
066	CELESTE1	[20]CHORUS4	CELESTE3		[16]CHORUS2		[19]CHORUS3	[17]CHORUS1	[32]Rotary Sp5			
067	FLANGER 1	[25]FLANGER 4			[22]FLANGER1		[23]FLANGER2	[24]FLANGER3				
068	SYMPHONIC						[26]Symphonic					
069	ROTARY SP.						[28]Rotary Sp1					
070	TREMOLO						[33]Tremolo1	[31]Rotary Sp4				
071	AUTO PAN						[36]AutoPan	[29]Rotary Sp2	[30]Rotary Sp3	[34]Tremolo2	[35]Gtr Tremolo	
072	[27]PHASER				[17]PHASER1							
073	DISTORTION											
074	OVER DRIVE											
075	AMP SIM.						[42]DIST.HARD	[43]DIST.SOFT				
076	3BAND EQ						[44]EQ DISCO	[45]EQ TEL				
077	2BAND EQ											
078	AUTO WAH						[37]Auto Wah					
079...127	THRU											

< Table 1-8 > Effect Parameter List

HALL1,HALL2, ROOM1,ROOM2,ROOM3, STAGE1,STAGE2, PLATE (reverb, variation block)

No.	Parameter		Value
1	Reverb Time	0.3 — 30.0s	0-69
2	Diffusion	0 — 10	0-10
3	Initial Delay	0 — 63	0-63
4	HPF Cutoff	Thru — 8.0kHz	0-52
5	LPF Cutoff	1.0k — Thru	34-60
6			
7			
8			
9			
10	Dry/Wet	D63 > W — D=W — D<W63	1-127
11	Rev Delay	0 — 63	0-63
12	Density	0 — 3	0-3
13	Er/Rev Balance	E63 > R — E=R — E<R63	1-127
14			
15	Feedback Level	-63 — +63	1-127
16			

WHITE ROOM, TUNNEL, CANYON, BASEMENT (reverb)

No.	Parameter		Value
1	Reverb Time	0.3 — 30.0s	0-69
2	Diffusion	0 — 10	0-10
3	Initial Delay	0 — 63	0-63
4	HPF Cutoff	Thru — 8.0kHz	0-52
5	LPF Cutoff	1.0k — Thru	34-60
6	Width	0.5 — 10.2m	0-37
7	Heigt	0.5 — 20.2m	0-73
8	Depth	0.5 — 30.2m	0-104
9	Wall Vary	0 — 30	0-30
10	Dry/Wet	D63 > W — D=W — D<W63	1-127
11	Rev Delay	0 — 63	0-63
12	Density	0 — 3	0-3
13	Er/Rev Balance	E63 > R — E=R — E<R63	1-127
14			
15	Feedback Level	-63 — +63	1-127
16			

DELAY L,C,R (variation block)

No.	Parameter		Value
1	Lch Delay	0.1 — 715.0ms	1-7150
2	Rch Delay	0.1 — 715.0ms	1-7150
3	Cch Delay	0.1 — 715.0ms	1-7150
4	Feedback Delay	0.1 — 715.0ms	1-7150
5	Feedback Level	-63 — +63	1-127
6	Cch Level	0 — 127	0-127
7	High Damp	0.1 — 1.0	1-10
8			
9			
10	Dry/Wet	D63 > W — D=W — D<W63	1-127
11			
12			
13	EQ Low Frequency	50Hz — 2.0kHz	8-40
14	EQ Low Gain	–12 — +12dB	52-76
15	EQ High Frequency	500Hz — 16.0kHz	28-58
16	EQ High Gain	–12 — +12dB	52-76

DELAY L,R (variation block)

No.	Parameter		Value
1	Lch Delay	0.1 — 715.0ms	1-7150
2	Rch Delay	0.1 — 715.0ms	1-7150
3	Feedback Delay 1	0.1 — 715.0ms	1-7150
4	Feedback Delay 2	0.1 — 715.0ms	1-7150
5	Feedback Level	-63 — +63	1-127
6	High Damp	0.1 — 1.0	1-10
7			
8			
9			
10	Dry/Wet	D63 > W — D=W — D<W63	1-127
11			
12			
13	EQ Low Frequency	50Hz — 2.0kHz	8-40
14	EQ Low Gain	–12 — +12dB	52-76
15	EQ High Frequency	500Hz — 16.0kHz	28-58
16	EQ High Gain	–12 — +12dB	52-76

ECHO (variation block)

No.	Parameter		Value
1	Lch Delay1	0.1 — 355.0ms	1-3550
2	Lch Feedback Level	-63 — +63	1-127
3	Rch Delay1	0.1 — 355.0ms	1-3550
4	Rch Feedback Level	-63 — +63	1-127
5	High Damp	0.1 — 1.0	1-10
6	Lch Delay2	0.1 — 355.0ms	1-3550
7	Rch Delay2	0.1 — 355.0ms	1-3550
8	Delay2 Level	0 — 127	0-127
9			
10	Dry/Wet	D63 > W — D=W — D<W63	1-127
11			
12			
13	EQ Low Frequency	50Hz — 2.0kHz	8-40
14	EQ Low Gain	–12 — +12dB	52-76
15	EQ High Frequency	500Hz — 16.0kHz	28-58
16	EQ High Gain	–12 — +12dB	52-76

CROSS DELAY (variation block)

No.	Parameter		Value
1	L -> R Delay	0.1 — 355.0ms	1-3550
2	R -> L Delay	0.1 — 355.0ms	1-3550
3	Feedback Level	-63 — +63	1-127
4	Input Select	"L,R,L&R"	0-2
5	High Damp	0.1 — 1.0	1-10
6			
7			
8			
9			
10	Dry/Wet	D63 > W — D=W — D<W63	1-127
11			
12			
13	EQ Low Frequency	50Hz — 2.0kHz	8-40
14	EQ Low Gain	–12 — +12dB	52-76
15	EQ High Frequency	500Hz — 16.0kHz	28-58
16	EQ High Gain	–12 — +12dB	52-76

EARLY REF1,EARLY REF2(variation block)

No.	Parameter		Value
1	Type	"S-H, L-H, Rdm, Rvs, Plt, Spr"	0-5
2	Room Size	0.1 — 7.0	0-44
3	Diffusion	0 — 10	0-10
4	Initial Delay	0 — 63	0-63
5	Feedback Level	-63 — +63	1-127
6	HPF Cutoff	Thru — 8.0kHz	0-52
7	LPF Cutoff	1.0k — Thru	34-60
8			
9			
10	Dry/Wet	D63 > W — D=W — D<W63	1-127
11	Liveness	0 — 10	0-10
12	Density	0 — 3	0-3
13	High Damp	0.1 — 1.0	1-10
14			
15			
16			

GATE REVERB, REVERSE GATE (variation block)

No.	Parameter		Value
1	Type	"TypeA,TypeB"	0-1
2	Room Size	0.1 — 7.0	0-44
3	Diffusion	0 — 10	0-10
4	Initial Delay	0 — 63	0-63
5	Feedback Level	-63 — +63	1-127
6	HPF Cutoff	Thru — 8.0kHz	0-52
7	LPF Cutoff	1.0k — Thru	34-60
8			
9			
10	Dry/Wet	D63 > W — D=W — D<W63	1-127
11	Liveness	0 — 10	0-10
12	Density	0 — 3	0-3
13	High Damp	0.1 — 1.0	1-10
14			
15			
16			

KARAOKE1,2,3 (variation block)

No.	Parameter		Value
1	Delay Time	0 — 127	0-127
2	Feedback Level	-63 — +63	1-127
3	HPF Cutoff	Thru — 8.0kHz	0-52
4	LPF Cutoff	1.0k — Thru	34-60
5			
6			
7			
8			
9			
10	Dry/Wet	D63 > W — D=W — D<W63	1-127
11			
12			
13			
14			
15			
16			

CHORUS1,2,3,4, CELESTE1,2,3,4 (chorus, variation block)

No.	Parameter		Value
1	LFO Frequency	0.00Hz — 39.7Hz	0-127
2	LFO Depth	0 — 127	0-127
3	Feedback Level	-63 — +63	1-127
4	Delay Offset	0 — 127	0-127
5			
6	EQ Low Frequency	50Hz — 2.0kHz	8-40
7	EQ Low Gain	–12 — +12dB	52-76
8	EQ High Frequency	500Hz — 16.0kHz	28-58
9	EQ High Gain	–12 — +12dB	52-76
10	Dry/Wet	D63 > W — D=W — D<W63	1-127
11			
12			
13			
14			
15	Input Mode	mono/stereo	0-1
16			

FLANGER1,2,3 (chorus, variation block)

No.	Parameter		Value
1	LFO Frequency	0.00Hz — 39.7Hz	0-127
2	LFO Depth	0 — 127	0-127
3	Feedback Level	-63 — +63	1-127
4	Delay Offset	0 — 63	0-63
5			
6	EQ Low Frequency	50Hz — 2.0kHz	8-40
7	EQ Low Gain	–12 — +12dB	52-76
8	EQ High Frequency	500Hz — 16.0kHz	28-58
9	EQ High Gain	–12 — +12dB	52-76
10	Dry/Wet	D63 > W — D=W — D<W63	1-127
11			
12			
13			
14	LFO Phase Difference	-180 — +180deg(resolution=3deg.)	4-124
15			
16			

SYMPHONIC (variation block)

No.	Parameter		Value
1	LFO Frequency	0.00Hz — 39.7Hz	0-127
2	LFO Depth	0 — 127	0-127
3	Delay Offset	0 — 127	0-127
4			
5			
6	EQ Low Frequency	50Hz — 2.0kHz	8-40
7	EQ Low Gain	–12 — +12dB	52-76
8	EQ High Frequency	500Hz — 16.0kHz	28-58
9	EQ High Gain	–12 — +12dB	52-76
10	Dry/Wet	D63 > W — D=W — D<W63	1-127
11			
12			
13			
14			
15			
16			

ROTARY SPEAKER (variation block)

No.	Parameter		Value
1	LFO Frequency	0.00Hz — 39.7Hz	0-127
2	LFO Depth	0 — 127	0-127
3			
4			
5			
6	EQ Low Frequency	50Hz — 2.0kHz	8-40
7	EQ Low Gain	–12 — +12dB	52-76
8	EQ High Frequency	500Hz — 16.0kHz	28-58
9	EQ High Gain	–12 — +12dB	52-76
10	Dry/Wet	D63 > W — D=W — D<W63	1-127
11			
12			
13			
14			
15			
16			

TREMOLO (variation block)

No.	Parameter		Value
1	LFO Frequency	0.00Hz — 39.7Hz	0-127
2	AM Depth	0 — 127	0-127
3	PM Depth	0 — 127	0-127
4			
5			
6	EQ Low Frequency	50Hz — 2.0kHz	8-40
7	EQ Low Gain	–12 — +12dB	52-76
8	EQ High Frequency	500Hz — 16.0kHz	28-58
9	EQ High Gain	–12 — +12dB	52-76
10			
11			
12			
13			
14	LFO Phase Difference	-180 — +180deg(resolution=3deg.)	4-124
15	Input Mode	mono/stereo	0-1
16			

AUTO PAN (variation block)

No.	Parameter		Value
1	LFO Frequency	0.00Hz — 39.7Hz	0-127
2	L/R Depth	0 — 127	0-127
3	F/R Depth	0 — 127	0-127
4	PAN Direction	"L <-> R,L -> R,L <- R,Lturn,Rturn,L/R"	0-5
5			
6	EQ Low Frequency	50Hz — 2.0kHz	8-40
7	EQ Low Gain	–12 — +12dB	52-76
8	EQ High Frequency	500Hz — 16.0kHz	28-58
9	EQ High Gain	–12 — +12dB	52-76
10			
11			
12			
13			
14			
15			
16			

PHASER 1,2 (variation block)

No.	Parameter		Value
1	LFO Frequency	0.00Hz — 39.7Hz	0-127
2	LFO Depth	0 — 127	0-127
3	Phase Shift Offset	0 — 127	0-127
4	Feedback Level	-63 — +63	1-127
5			
6	EQ Low Frequency	50Hz — 2.0kHz	8-40
7	EQ Low Gain	–12 — +12dB	52-76
8	EQ High Frequency	500Hz — 16.0kHz	28-58
9	EQ High Gain	–12 — +12dB	52-76
10	Dry/Wet	D63 > W — D=W — D<W63	1-127
11	Stage	6 — 10(phaser1) / 3 — 5(phaser2)	3-10
12	Diffusion	mono/stereo	0-1
13	LFO Phase Difference	-180 — +180deg.(resolution=3deg.)	4-124
14			
15			
16			

DISTORTION, OVERDRIVE (variation block)

No.	Parameter		Value
1	Drive	0 — 127	0-127
2	EQ Low Frequency	50Hz — 2.0kHz	8-40
3	EQ Low Gain	–12 — +12dB	52-76
4	LPF Cutoff	1.0k — Thru	34-60
5	Output Level	0 — 127	0-127
6			
7	EQ Mid Frequency	100Hz — 10.0kHz	23-54
8	EQ Mid Gain	–12 — +12dB	52-76
9	EQ Mid Width	1.0 — 12.0	10-120
10	Dry/Wet	D63 > W — D=W — D<W63	1-127
11	Edge(Clip Curve)	0 — 127	0-127
12			
13			
14			
15			
16			

AMP SIMULATOR (variation block)

No.	Parameter		Value
1	Drive	0 — 127	0-127
2	AMP Type	"Off,Stack,Combo,Tube"	0-3
3	LPF Cutoff	1.0k — Thru	34-60
4	Output Level	0 — 127	0-127
5			
6			
7			
8			
9			
10	Dry/Wet	D63 > W — D=W — D<W63	1-127
11	Edge(Clip Curve)	0 — 127	0-127
12			
13			
14			
15			
16			

3BAND EQ(MONO) (variation block)

No.	Parameter		Value
1	EQ Low Gain	–12 — +12dB	52-76
2	EQ Mid Frequency	100Hz — 10.0kHz	23-54
3	EQ Mid Gain	–12 — +12dB	52-76
4	EQ Mid Width	1.0 — 12.0	10-120
5	EQ High Gain	–12 — +12dB	52-76
6	EQ Low Frequency	50Hz — 2.0kHz	8-40
7	EQ High Frequency	500Hz — 16.0kHz	28-58
8			
9			
10			
11			
12			
13			
14			
15			
16			

2BAND EQ(STEREO) (variation block)

No.	Parameter		Value
1	EQ Low Frequency	50Hz — 2.0kHz	8-40
2	EQ Low Gain	–12 — +12dB	52-76
3	EQ High Frequency	500Hz — 16.0kHz	28-58
4	EQ High Gain	–12 — +12dB	52-76
5			
6			
7			
8			
9			
10			
11			
12			
13			
14			
15			
16			

AUTO WAH (variation block)

No.	Parameter		Value
1	LFO Frequency	0.00Hz — 39.7Hz	0-127
2	LFO Depth	0 — 127	0-127
3	Cutoff Frequency Offset	0 — 127	0-127
4	Resonance	1.0 — 12.0	10-120
5			
6	EQ Low Frequency	50Hz — 2.0kHz	8-40
7	EQ Low Gain	–12 — +12dB	52-76
8	EQ High Frequency	500Hz — 16.0kHz	28-58
9	EQ High Gain	–12 — +12dB	52-76
10	Dry/Wet	D63 > W — D=W — D<W63	1-127
11			
12			
13			
14			
15			
16			

PORTATONE

PSR-530

PARTS LIST

■ CONTENTS (目次)

OVERALL ASSEMBLY (総組立) 1
UPPER CASE ASSEMBLY (上ケース Ass'y) 3
LOWER CASE ASSEMBLY (下ケース Ass'y) 5
KEYBOARD ASSEMBLY (鍵盤 Ass'y) 6
ELECTRICAL PARTS (電気部品) 7

Notes: DESTINATION ABBREVIATIONS

A : Australian model	J : Japanese model
B : British model	U : U.S. model
C : Canadian model	V : General export model (110 V)
E : European model	W : General export model (220 V)
I : Indonesian model	X : General export model
O : Chinese model	Y : Export model

- The numbers in " QTY " show quantities for each unit.
- The parts with "--" in " PART NO. " are not available as spare parts.
- 部品価格ランクは、変更になることがあります。
- QTY 欄に記されている数字は、各ユニットあたりの使用個数です。
- PART NO.が "--" の部品は、サービス用部品として準備されていません。

■ OVERALL ASSEMBLY (総組立)

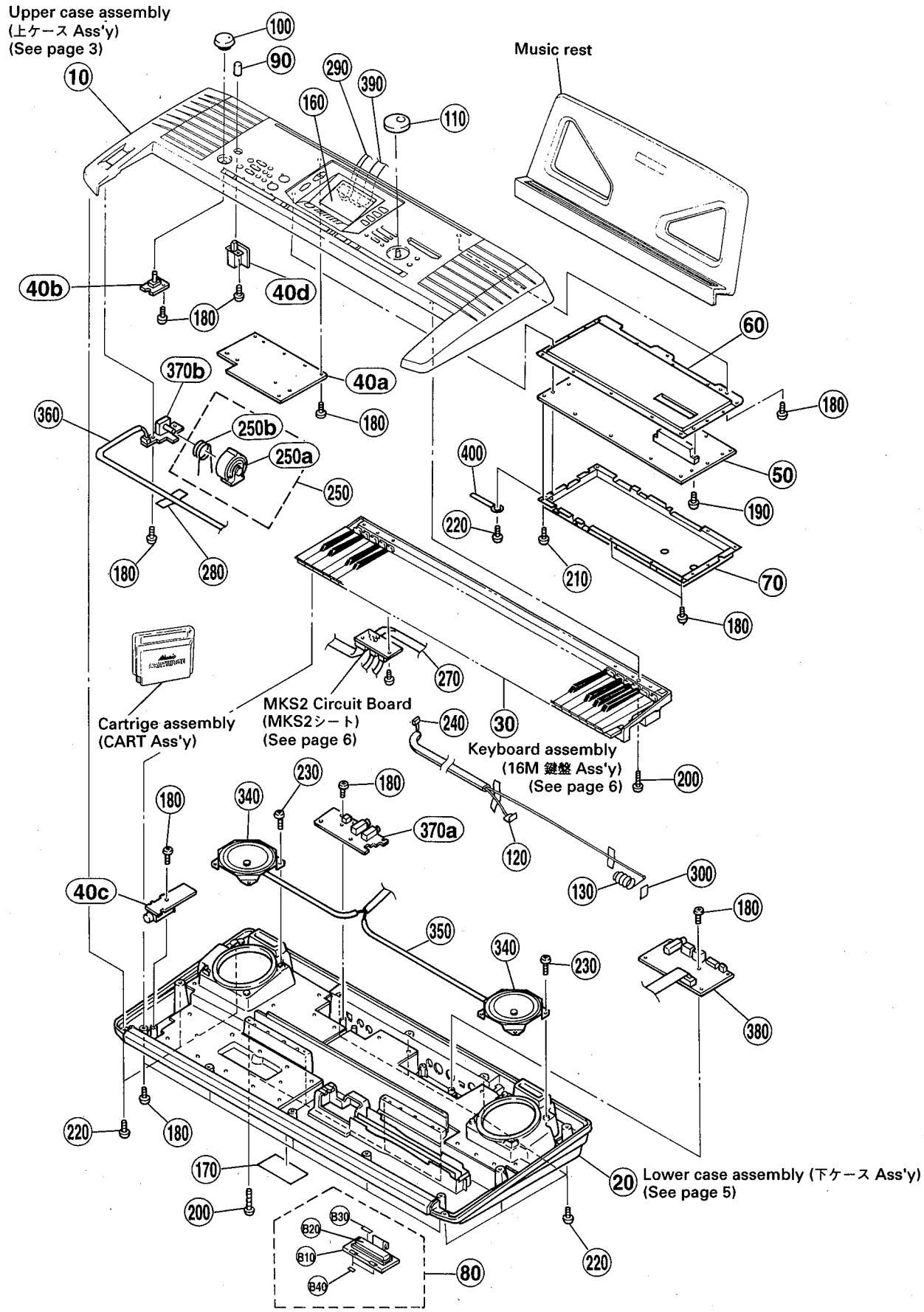

	REF NO.	PART NO.	DESCRIPTION		部品名	REMARKS		QTY	ランク
			OVERALL ASSEMBLY	CE	総組立	PSR530	(VV67020)		
			OVERALL ASSEMBLY	FCC	総組立	PSR530	(VZ52400)		
	10	--	Upper Case Assembly	CE	上ケースAss'y		(VV67030)		
	10	--	Upper Case Assembly	FCC	上ケースAss'y		(VZ62130)		
	20	--	Lower Case Assembly		下ケースAss'y		(VV67040)		
	30	VU621100	Keyboard Assembly	16M C61 K6	16M鍵盤Ass'y				24
‡	40	VV854500	Circuit Board	AM CE	AMシート				
‡	40	VZ616300	Circuit Board	AM FCC	AMシート				
	40a	--	Circuit Board	AM (AM1/4)	AMシート				
	40b	--	Circuit Board	VR (AM2/4)	VRシート				
	40c	--	Circuit Board	HP (AM3/4)	HPシート				
	40d		Circuit Board	SW (AM4/4)	SWシート				
‡	50	VY849400	Circuit Board	DM CE	DMシート				
‡	50	VZ616200	Circuit Board	DM FCC	DMシート				
‡	60	VV670500	Shield Case	Upper	シールドケース上				
‡	70	VV670600	Shield Case	Lower	シールドケース下				
	80	VJ601000	Battery Cover Assembly	BL	バッテリーカバーAss'y				06
	90	VQ218800	Push Knob		プッシュツマミ	STAND BY ON			03
	100	VU432400	Volume Knob		ボリュームツマミ	MASTER VOLUME			01
	110	VL921100	Encoder Knob	BL	エンコーダーツマミ	Dial			03
	120	BB005490	Terminal		端子板				01
	130	VN218200	Spring Terminal		接点バネ				03
	160	VY727100	LCD Panel		LCDパネル				
	170	--	Label	CE	規格，製番ラベル		(VZ16550)		
	170	--	Label	FCC	規格，製番ラベル		(VZ53720)		
	180	EP600280	Bind Head Tapping Screw-P	3.0X8 MFZN2Y	+バインドPタイト			25	01
	190	EP600310	Bind Head Tapping Screw-P	3.0X16 MFZN2Y	+バインドPタイト			2	01
	200	VK228100	Bind Head Tapping Screw-P	3.0X25 MFZN2Y	+バインドPタイト			6	01
	210	EP600190	Bind Head Tapping Screw-B	3.0X8 MFZN2BL	+バインドBタイト			14	01
	220	EP600300	Bind Head Tapping Screw-P	3.0X12 MFZN2Y	+バインドPタイト			15	01
	230	VB931600	Bind Head Tapping Screw-P	4.0X8 MFZN2BL	+バインドPタイト			8	01
	240	--	Connector Assembly,BATT-AM	RE L=360 BL L=800	BATT-AM束線		(VY85160)		
	250	--	Wheel Assembly		ホイールAss'y	PITCH BEND	(VT48770)		
	250a	VT366400	Wheel		ホイール				03
	250b	VT440100	Spring		ホイールバネ				03
	270	--	Connector Assembly	DM-MK 6P L=450	DM-MK束線Ass'y		(VZ60620)		
	280	VA126100	Adhesive Tape	12X50	粘着テープ			21	03
	290	--	Connector Assembly	DM-LCD2 2P L=230	DM-LCD2束線		(VY85100)		
	300	VJ861500	Vibration-proof Tape	18X25	防振テープ				03
‡	340	XT278A00	Speaker	12.0cm 4ohm 6W	スピーカ			2	
	350	--	Connector Assembly	SP-L/R	SP-L/R束線		(VZ16230)		
	360	--	Connector Assembly	PN-PB 3P L=600	PN-PB束線		(VY85120)		
‡	370a	NX007780	Circuit Board	AM-JK (1/2)	AM-JKシート1/2				
‡	370b	NX007790	Circuit Board	AM-JK (2/2) PB	AM-JKシート2/2				
‡	380	VY849500	Circuit Board	DM-JK	DM-JKシート				
	390	--	Connector Assembly	DM-DM JK	DM-DM JK束線		(VY85110)		
	400	CB502030	Cord Binder	S-75B	束線止め				
	410	EP600270	Bind Head Tapping Screw-P	3.0X10 MFZN2Y	+バインドPタイト			5	01
			ACCESSORIES		付属品				
		VU469500	Music Rest		譜面立て				07
‡		VZ089200	AC Adapter	PA-6 J	ACアダプター	J			
‡		VZ089300	AC Adapter	PA-6 CE	ACアダプター	O			
‡		VY845100	Japanese Guide Sheet		和文シート	J			
‡		VY845000	Chinese Guide Sheet		中文シート	O			
‡		VZ241000	Cartridge Assembly		CART Ass'y	MUSIC CARTRIDGE			
		VJ601000	Battery Cover Assembly	BL	バッテリーカバーAss'y				06
	B10	CB047850	Battery Cover	BL	バッテリーカバー				02
	B20	CB047750	Battery Cushion	GY	バッテリークッション				01
	B30	--	Vibration-proof Pad	BL #7100 BL	防振パット		(CA01485)	2	
	B40	--	Vibration-proof Tape	6X 25X0.3	防振テープ		(VJ56490)	3	

‡ New Parts（新規部品）

ランク：Japan only

■ UPPER CASE ASSEMBLY (上ケース Ass'y)

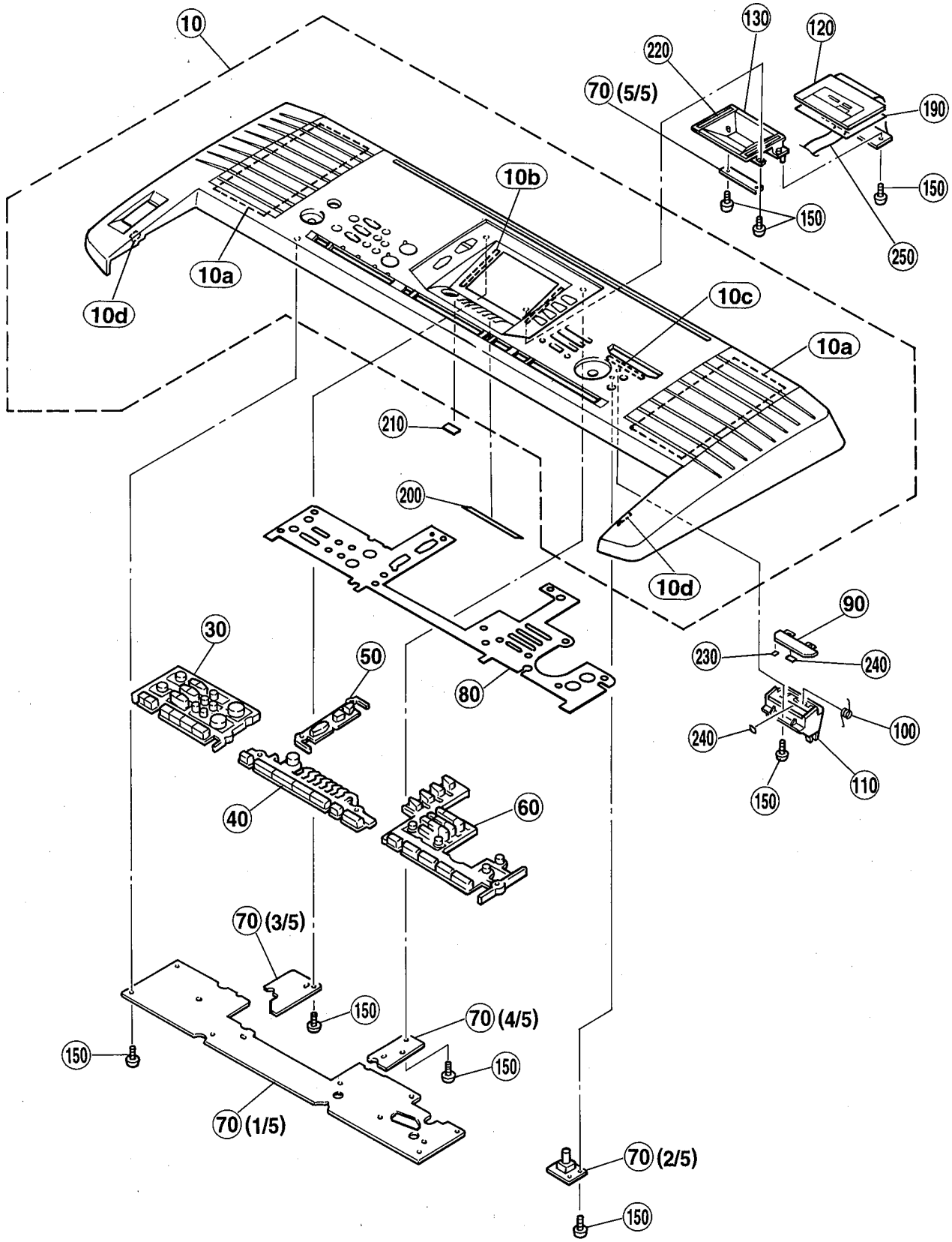

	REF NO.	PART NO.	DESCRIPTION		部品名	REMARKS	QTY	ランク
		--	UPPER CASE ASSEMBLY	CE	上ケースAss'y	PSR530 (VV67030)		
		--	Upper Case Assembly	FCC	上ケースAss'y	PSR530 (VZ62130)		
*	10	VV670800	Upper Case		上ケース加工品			
	10a	--	Speaker Cloth	C 170X120	スピーカークロスC	(VZ23130)	2	
	10b	--	Vibration-proof Tape	J 90X3X0.15	防振テープJ	(VY83780)	2	
	10c	--	Vibration-proof Form	A 9X100	防振フォームA	(VT90740)		
	10d	VT703200	Vibration-proof Tape	E 15X15X0.5	防振テープE		9	01
*	30	VY635300	Panel Switch	L	パネルスイッチL成形品	※ Refer to the figure shown below.		
	40	VY635400	Panel Switch	C	パネルスイッチC成形品			
	50	VY635500	Panel Switch	U	パネルスイッチU成形品			
	60	VY735000	Panel Switch	R	パネルスイッチR印刷品			
*	70	VY850000	Circuit Board	PN	PNシート			
*	80	VY854300	Vibration-proof Sheet	U	防振シートU			
	90	VU264600	Cartridge Rid		CART蓋成形品			03
	100	VU264500	Spring		回転バネ			03
	110	VT367600	Cartridge Guide		CARTガイド成形品			04
*	120	VZ320900	LCD	DM150A-7J	液晶ディスプレイ			
	130	VV672100	Cover		バックライトカバー			
	150	EP600280	Bind Head Tapping Screw-P	3.0X8 MFZN2Y	+バインドPタイト		32	01
	190	VZ089000	Diffusion Sheet Assembly	PT	拡散シートAss'y			
*	200	VZ087700	Vibration-proof Tape	M 100X10X0.15	防振テープM			
*	210	VZ087800	Vibration-proof Tape	S 20X10X0.15	防振テープS			
*	220	VY837900	Vibration-proof Tape	K 90X5X0.15	防振テープK		2	
*	230	VQ760900	Vibration-proof Tape	8X8X0.5	防振テープ		2	
	240	VT703200	Vibration-proof Tape	E 15X15X0.5	防振テープE		2	01
	250	--	Connector Assembly	DM-LCD1 13P L=250	DM-LCD1束線	(VY85090)		

* New Parts (新規部品)

ランク：Japan only

• Panel Switch (パネルスイッチ)

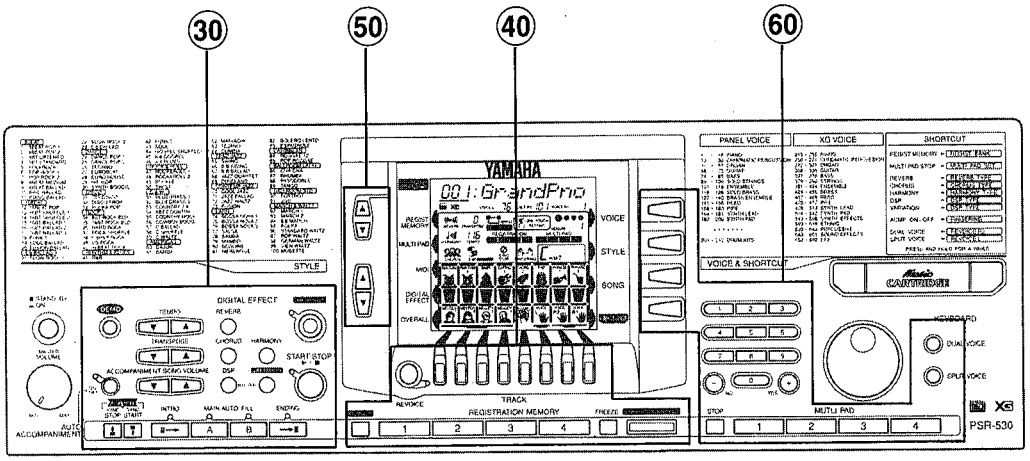

■ LOWER CASE ASSEMBLY (下ケース Ass'y)

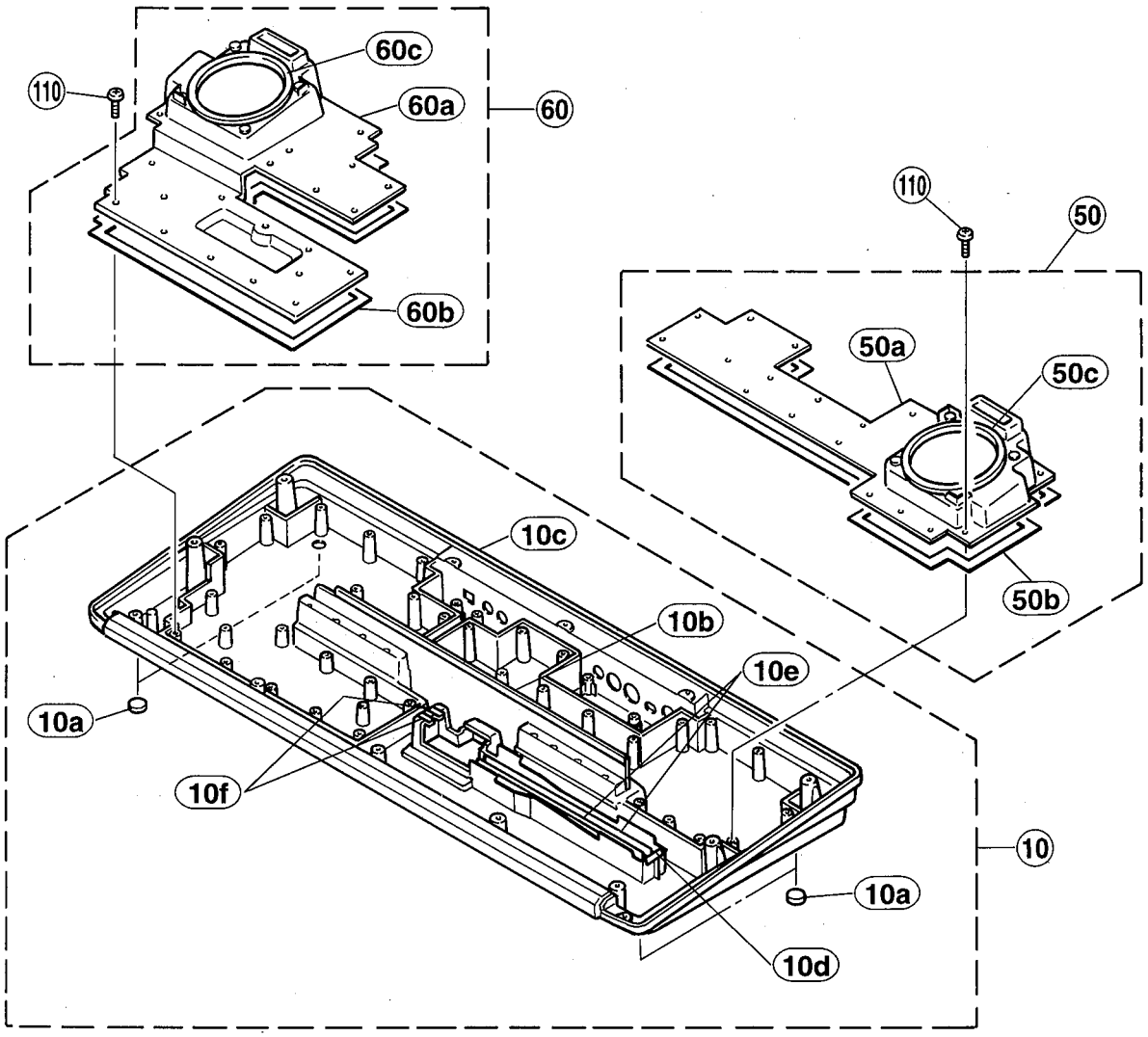

	REF NO.	PART NO.	DESCRIPTION		部品名	REMARKS		QTY	ランク
			LOWER CASE ASSEMBLY		下ケースAss'y	PSR530	(VV67040)		
*	10	VV670900	Lower Case		下ケース加工品				
	10a	CB043750	Foot	BL T1.6	ゴム足			6	01
	10b	--	Tape	C	シールテープC		(VY84400)		
	10c	--	Tape	R	シールテープR		(VY84410)		
	10d	--	Vibration-proof Tape	10X30X0.5	防振テープ		(VR96890)		
	10e	VJ790400	Vibration-proof Tape	10X290X0.2	防振テープ			2	03
	10f	--	Vibration-proof Form	C	防振フォームC		(VT93020)	2	
*	50	VZ270700	Speaker Box Assembly	L	SP. BOXAss'y L				
	50a	--	Speaker Box	L	SP. BOX L		(VZ05510)		
	50b	--	Packing	PE (L)	パッキンL		(VZ16510)		
	50c	--	Packing	PE (SP)	パッキンSP		(VZ16540)		
*	60	VZ270800	Speaker Box Assembly	R	SP. BOXAss'y R				
	60a	--	Speaker Box	R	SP. BOX R		(VZ05520)		
	60b	--	Packing	PE (R)	パッキンR		(VZ16520)		
	60c	--	Packing	PE (SP)	パッキンSP		(VZ16540)		
	110	EP640500	Bind Head Tapping Screw-P	4.0X10 MFZN2Y	+バインドPタイト			46	01

* New Parts (新規部品)

ランク：Japan only

■ KEYBOARD ASSEMBLY (16M 鍵盤 Ass'y)

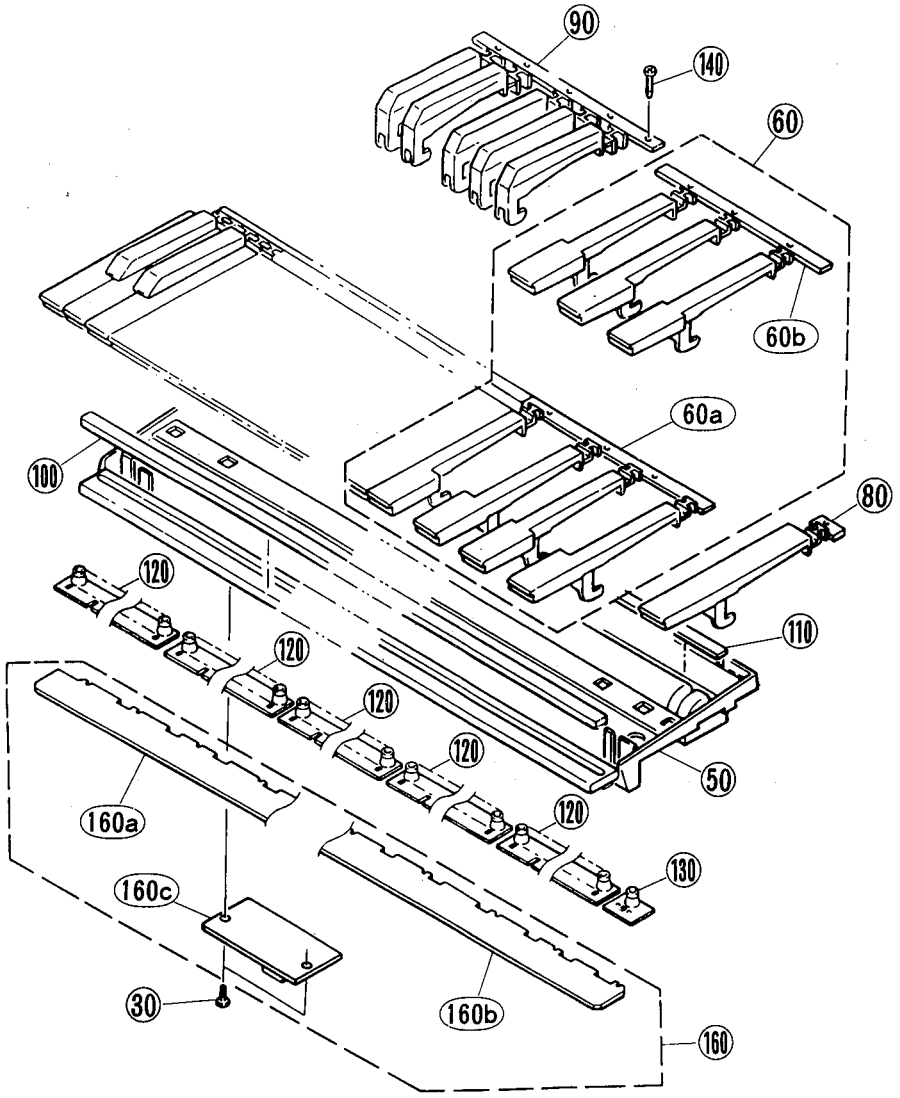

※ Refer to the CIRCUIT BOARD LAYOUT section of this manual regarding 160d, 160e, 160f, 160g connector assemblies.

REF NO.	PART NO.	DESCRIPTION		部品名	REMARKS	QTY	ランク
		KEYBOARD ASSEMBLY		鍵盤Ass'y	PSR530		
	VU621100	Keyboard Assembly	16M C61 K6	16M鍵盤Ass'y			24
30	EP630220	Bind Head Tapping Screw-P	3.0X8 MFZN2BL	+バインドPタイト		2	01
50	--	Frame	C61 16M	フレーム	(VU32860)		
60	VH1809C0	White Keys	1OCT	白鍵CEGBDFA		5	03
60a	--	White Keys		白鍵CEGB	(VH18090)	5	03
60b	--	White Keys		白鍵DFA	(VH18100)	5	03
80	VH181100	White Key		白鍵C'			01
90	VH181210	Black Keys	1OCT	黒鍵		5	03
100	VH181300	Felt		フェルト			03
110	VH181400	Rubber Sheet		ゴムシート			01
120	VU328400	Rubber Contact	16M OCT 2M 12KEYS	接点ゴム		5	06
130	VU328500	Rubber Contact	16M C' 2M 1KEY	接点ゴム			05
140	VB205200	Bind Head Tapping Screw-P	3.0X16 MFZN2BL	+バインドPタイト		21	01
140	VS756700	Bind Head Tapping Screw-P	3.0X16 MFZN2B	+バインドPタイト		21	01
160	--	Circuit Board	SW	鍵盤SWシート	(VU62120)		
160a	VU648100	Circuit Board	MK-L	MK-Lシート			09
160b	VU648200	Circuit Board	MK-H	MK-Hシート			09
160c	VU494600	Circuit Board	MKS2 16M	MKS2シート			10
160d	VU958900	Cable	12P	ケーブル			03
160e	VU659500	Cable	12P	ケーブル			02
160f	VU659400	Cable	7P	ケーブル			02
160g	VU659600	Cable	5P	ケーブル			02

‡ New Parts (新規部品)

ランク：Japan only

■ ELECTRICAL PARTS (電気部品)

	REF NO.	PART NO.	DESCRIPTION		部品名	REMARKS	QTY	ランク
			ELECTRICAL PARTS		電気部品	PSR530		
*		VV854500	Circuit Board	AM CE	A M シート	(XS972B0)		
*		VZ616300	Circuit Board	AM FCC	A M シート	(XS972B0)		
*		NX007780	Circuit Board	AM-JK (1/2)	AM－JKシート1／2	(XT033B0)		
*		NX007790	Circuit Board	AM-JK (2/2) PB	AM－JKシート2／2	(XT033B0)		
*		VY849400	Circuit Board	DM CE	D M シート	(XT031B0)		
*		VZ616200	Circuit Board	DM FCC	D M シート	(XT031B0)		
*		VY849500	Circuit Board	DM-JK	D M－J K シート	(XT032B0)		
		VU648100	Circuit Board	MK-L	M K － L シート	(XR564B0)		17
		VU648200	Circuit Board	MK-H	M K － H シート	(XR564B0)		15
		VU494600	Circuit Board	MKS2 16M	M K S 2 シート	(XR736C0)		25
*		VY850000	Circuit Board	PN	P N シート	(XT684A0)		
*		VV854500	Circuit Board	AM CE	A M シート	(XS972B0)		
*		VZ616300	Circuit Board	AM FCC	A M シート	(XS972B0)		
		--	Circuit Board	AM (1/4)	A M シート	(XS972B0)		
		--	Circuit Board	VR (2/4)	V R シート	(XS972B0)		
		--	Circuit Board	HP (3/4)	H P シート	(XS972B0)		
		--	Circuit Board	SW (4/4)	S W シート	(XS972B0)		
		EP600190	Bind Head Tapping Screw-B	3.0X8 MFZN2BL	＋バインドBタイト			01
		VA078900	Jumper Wire	0.55	ジャンパー線			
		FG613150	Ceramic Capacitor-B	1500P 50V K	セラコン B			01
		UN866330	Electrolytic Cap.-BP	3.30 50.0V	B P ケミコン			01
		UN837100	Electrolytic Cap.-BP	10.00 16.0V	B P ケミコン			01
		VR168400	Monolithic Mylar Capacitor	ECQ-V1H124JL3	積層マイラーコン			01
		VR169300	Monolithic Mylar Capacitor	ECQ-V1H564JL3	積層マイラーコン			01
		VU838100	Monolithic Mylar Capacitor	ECQ-V1H105JL3	積層マイラーコン			
		VR169400	Monolithic Mylar Capacitor	ECQ-V1H684JL3	積層マイラーコン			
		VR168500	Monolithic Mylar Capacitor	ECQ-V1H154JL3	積層マイラーコン			01
		VU838100	Monolithic Mylar Capacitor	ECQ-V1H105JL3	積層マイラーコン			
		VR168300	Monolithic Mylar Capacitor	ECQ-V1H104JL3	積層マイラーコン			01
		UA654680	Mylar Capacitor	0.0680 50V J	マイラーコン			01
		UA654100	Mylar Capacitor	0.0100 50V J	マイラーコン			01
		UA654180	Mylar Capacitor	0.0180 50V J	マイラーコン			01
*		FG612100	Ceramic Cap.-B	100P 50V K	セラコン B			
		VC694800	Semiconductive Cera. Cap.	0.1000 25V Z	半導体セラコン			01
		UJ837470	Electrolytic Cap.	47.00 16.0V	ケミコン			01
		UJ838100	Electrolytic Cap.	100.00 16.0V	ケミコン			01
		UJ848100	Electrolytic Cap.	100.00 25.0V	ケミコン			01
		UJ837100	Electrolytic Cap.	10.00 16.0V	ケミコン			01
		UJ866100	Electrolytic Cap.	1.00 1.0A50.0V	ケミコン			01
		FG651220	Ceramic Capacitor-SL	22P 50V J	セラコン (SL)			01
		FG613560	Ceramic Capacitor-B	5600P 50V K	セラコン (B)			01
		VT757800	Monolithic Ceramic Cap.	1.000 25V Z	積層セラコン			01
		FG612470	Ceramic Capacitor-B	470P 50V K	セラコン B			01
		UJ827330	Electrolytic Cap.	33.00 10.0V	ケミコン			01
		UJ828100	Electrolytic Cap.	100.00 10.0V	ケミコン			01
		UA654470	Mylar Capacitor	0.0470 50V J	マイラーコン			01
		UJ865470	Electrolytic Cap.	0.47 50.0V	ケミコン			01
		VT848900	Electrolytic Cap.	6800 25.0V	ケミコン			03
	D701	VL723600	Diode	20E1-FC4	ダイオード			01
*	D701	VY717100	Diode	LT2A02-E	ダイオード			
		VB835000	Coil	FL5R200QNT	コイル 20U			01
		HF757100	Carbon Resistor	10.0K 1/4 J	カーボン抵抗			01
		HF756330	Carbon Resistor	3.3K 1/4 J	カーボン抵抗			01
		HF757220	Carbon Resistor	22.0K 1/4 J	カーボン抵抗			01
		HF756390	Carbon Resistor	3.9K 1/6 J	カーボン抵抗			01
		HF757180	Carbon Resistor	18.0K 1/4 J	カーボン抵抗			01
		HF756100	Carbon Resistor	1.0K 1/4 J	カーボン抵抗			01
		HF755470	Carbon Resistor	470.0 1/4 J	カーボン抵抗			01
		HF756470	Carbon Resistor	4.7K 1/4 J	カーボン抵抗			01
		HF755560	Carbon Resistor	560.0 1/4 J	カーボン抵抗			01
		HF758470	Carbon Resistor	470.0K 1/4 J	カーボン抵抗			01
		HF755150	Carbon Resistor	150.0 1/4 J	カーボン抵抗			01
		HF756220	Carbon Resistor	2.2K 1/4 J	カーボン抵抗			01
		HF757470	Carbon Resistor	47.0K 1/4 J	カーボン抵抗			01
		HF757330	Carbon Resistor	33.0K 1/4 J	カーボン抵抗			01
		HF757120	Carbon Resistor	12.0K 1/4 J	カーボン抵抗			01
		HF757270	Carbon Resistor	27.0K 1/4 J	カーボン抵抗			01
		HF758100	Carbon Resistor	100.0K 1/4 J	カーボン抵抗			01

* New Parts (新規部品)

ランク：Japan only

REF NO.	PART NO.	DESCRIPTION		部品名	REMARKS	QTY	ランク
	HF755680	Carbon Resistor	680.0 1/4 J	カーボン抵抗			01
	HF756680	Carbon Resistor	6.8K 1/4 J	カーボン抵抗			01
	HF753220	Carbon Resistor	2.2 1/4 J	カーボン抵抗			01
	HF755100	Carbon Resistor	100.0 1/4 J	カーボン抵抗			01
	HF755330	Carbon Resistor	330.0 1/4 J	カーボン抵抗			01
W001	--	Connector Assembly	5P L=250 DM-SW	DM-SW束線	(VY85020)		
W002	--	Connector Assembly	10P L=300 AM-SW	AM-SW束線	(VY85040)		
W003	--	Connector Assembly	5P L=600 AM-HP	AM-HP束線	(VY85030)		
W005	--	Connector Assembly	4P L=360 DM-VR	DM-VR束線	(VY85190)		
W006	--	Connector Assembly	5P L=250 AM-VR	AM-VR束線	(VY85200)		
W007	--	Connector Assembly	L=120 AM-DM	AM-DMアース線	(VY85210)		
	VA078900	Jumper Wire	0.55	ジャンパー線			
CN701	LB918020	Base Post Connector	XH 2P TE	ベースツキポスト			01
CN702	LB918040	Base Post Connector	XH 4P TE	ベースツキポスト			01
CN704	VI878800	Cable Holder	51048 10P TE	ケーブルホルダー			01
CN705	VK024900	Wire Trap	52147 5P TE	ワイヤートラップ			01
CN706	VI878300	Cable Holder	51048 5P TE	ケーブルホルダー			01
CN707	VI878800	Cable Holder	51048 10P TE	ケーブルホルダー			01
CN708	VI878300	Cable Holder	51048 5P TE	ケーブルホルダー			01
CN709	VK025300	Wire Trap	52147 9P TE	ワイヤートラップ			01
‡ HS001	VV856400	Heat Sink		放熱板			
IC201	XF751A00	IC	M5227P	IC	EQUALIZER		04
IC202	XF751A00	IC	M5227P	IC	EQUALIZER		04
IC302	XB247A00	IC	UPC4570HA	IC	OP AMP		01
‡ IC303	XT676A00	IC	AN77L09-TA	IC	REGURATOR +9V		
IC501	XB247A00	IC	UPC4570HA	IC	OP AMP		01
IC701	XQ619A00	IC	LA4705NA	IC	POWER AMP 17W		05
JK701	LB101870	Phone Jack	JACK YKB21-5006	ホーンコネクタ	PHONES		03
‡ JK701	VV943300	Phone Jack	JACK HTJ064-04A	ホーンコネクタ	PHONES		
SW301	VY980400	Push Switch	SDDLB1 J,UC,CEE	プッシュSW	STAND BY/ON		03
VR301	VY711800	Rotary Variable Resistor	A10.0K XV0141GPVN2	二連ロータリーVR	MASTER VOLUME		02
‡ VR301	VZ048400	Rotary Variable Resistor	A10.0K XV0141GPVN2	二連ロータリーVR	MASTER VOLUME		
‡	NX007780	Circuit Board	AM-JK (1/2)	AM-JKシート1／2	(XT033B0)		
‡	NX007790	Circuit Board	AM-JK (2/2) PB	AM-JKシート2／2	(XT033B0)		
	KB003240	Fuse	5.00A S	ヒューズ			01
	LB201530	Fuse Holder	PC-PH1	ヒューズホルダ			01
	VA078900	Jumper Wire	0.55	ジャンパー線			
	VC694800	Semiconductive Cera. Cap.	0.1000 25V Z	半導体セラコン			01
	VB835000	Coil	FL5R200QNT	コイル 20U			01
W001	--	Connector Assembly	9P L=250 AM-AM.JK	AM-AM・JK束線	(VY85050)		
CN101	VI878700	Cable Holder	51048 9P TE	ケーブルホルダー			01
CN102	VK024700	Wire Trap	52147 3P TE	ワイヤートラップ			01
JK101	VC664500	Connector	SOCKET HEC2305	電源コネクタ	DC IN 10-12V		01
JK102	VB312600	Phone Jack	JACK(BL)YKB21-5012	ホーンコネクタ（黒）	AUX OUT R		02
‡ JK102	VV943400	Phone Jack	JACK JY6314-01-130	ホーンコネクタ（黒）	AUX OUT R		
JK103	VC687500	Phone Jack	JACK(BL)YKB21-5014	ホーンコネクタ（黒）	AUX OUT L/L+R		01
LF101	VI486800	Line Filter	SU10VD-20020	ラインフィルター			03
VR101	VT432100	Rotary Variable Resistor	B10K EVJ05DF25B14	ロータリーVR	PITCH BEND		03
‡	VY849400	Circuit Board	DM CE	DMシート	(XT031B0)		
‡	VZ616200	Circuit Board	DM FCC	DMシート	(XT031B0)		
	EA030106	Pan Head Screw	3.0X10 MFZN2Y	+ナベ小ネジ	(0375114)		
	EP600190	Bind Head Tapping Screw-B	3.0X8 MFZN2BL	+バインドBタイト			01
	ES200060	Hexagonal Nut	#1 3.0 MFZN2Y	六角ナット			01
	VK863100	IC Socket	DICF-42CS-E	ICソケット			03
	VA078900	Jumper Wire	0.55	ジャンパー線			
	UJ828100	Electrolytic Cap.	100.00 10.0V	ケミコン			01
	VC694800	Semiconductive Cera. Cap.	0.1000 25V Z	半導体セラコン			01
	FG612470	Ceramic Capacitor-B	470P 50V K	セラコンB			01
	FG652100	Ceramic Capacitor-SL	100P 50V J	セラコン（SL）			01
	FG651100	Ceramic Capacitor-SL	10P 50V D	セラコン（SL）			
	UJ827470	Electrolytic Cap.	47.00 10.0V	ケミコン			01
	UJ866100	Electrolytic Cap.	1.00 50.0V	ケミコン			01
	UA654470	Mylar Capacitor	0.0470 50V J	マイラーコン			01
	UJ819100	Electrolytic Cap.	1000 6.3V	ケミコン			01
	UG444220	Ceramic Capacitor	0.022 50V Z	セラコン			01
	UJ867100	Electrolytic Cap.	10.00 50.0V	ケミコン			01
	UJ848100	Electrolytic Cap.	100.00 25.0V	ケミコン			01
	VB941200	Diode	1SS133,1SS176	ダイオード			01

‡ New Parts（新規部品）

ランク：Japan only

REF NO.	PART NO.	DESCRIPTION		部品名	REMARKS	QTY	ランク
	VA078900	Jumper Wire	0.55	ジャンパー線			
	VM898600	Ferrite Bead	EXC-ELDR35V	フェライトビーズ			01
	VB835000	Coil	FL5R200QNT	コイル 20U			01
	HF755560	Carbon Resistor	560.0 1/4 J	カーボン抵抗			01
	HF756330	Carbon Resistor	3.3K 1/4 J	カーボン抵抗			01
	HF756100	Carbon Resistor	1.0K 1/4 J	カーボン抵抗			01
	HF755100	Carbon Resistor	100.0 1/4 J	カーボン抵抗			01
	HF757100	Carbon Resistor	10.0K 1/4 J	カーボン抵抗			01
	HF757470	Carbon Resistor	47.0K 1/4 J	カーボン抵抗			01
	HF759100	Carbon Resistor	1.0M 1/4 J	カーボン抵抗			01
	HF755680	Carbon Resistor	680.0 1/4 J	カーボン抵抗			01
	HF755180	Carbon Resistor	180.0 1/4 J	カーボン抵抗			01
	HF754220	Carbon Resistor	22.0 1/4 J	カーボン抵抗			01
	HF757220	Carbon Resistor	22.0K 1/4 J	カーボン抵抗			01
	HF755820	Carbon Resistor	820.0 1/4 J	カーボン抵抗			01
	HF755220	Carbon Resistor	220.0 1/4 J	カーボン抵抗			01
	VA078900	Jumper Wire	0.55	ジャンパー線			
	HF757390	Carbon Resistor	39.0K 1/4 J	カーボン抵抗			01
	HF758470	Carbon Resistor	470.0K 1/4 J	カーボン抵抗			01
	HF758100	Carbon Resistor	100.0K 1/4 J	カーボン抵抗			01
	VT487100	Ceramic Capacitor Array	470P X12	セラコンアレイ			02
	VH484100	Ceramic Capacitor Array	100P X8 50V M	セラコンアレイ			02
CN301	VB390000	Connector Base Post	PH- 4P TE	コネクタベースポスト			01
CN403	VU538700	Connector	PSB4D 60P TE	P基板用コネクター			04
CN501	VF728200	Connector	52147 10P TE	コネクタ			01
CN502	VK025700	Wire Trap	52147 13P TE	ワイヤートラップ			01
CN601	VK025700	Wire Trap	52147 13P TE	ワイヤートラップ			01
CN602	VK024600	Wire Trap	52147 2P TE	ワイヤートラップ			01
CN701	VK024900	Wire Trap	52147 5P TE	ワイヤートラップ			01
CN801	VK025200	Wire Trap	52147 8P TE	ワイヤートラップ			01
CN802	VF728300	Connector	52147 6P TE	コネクタ			01
‡ CR001	VY856300	Ceramic Resonator	7.00M EFOEC7004T4	セラミック振動子			
CR201	VT487600	Quartz Crystal Unit	33.8688M AT-49	水晶振動子			04
‡ HS001	VJ636100	Heat Sink		放熱板			
‡ IC001	XT125A00	IC	HD6437042E00F	IC	CPU		
IC002	XR902A00	IC	IC-PST591D-2	IC	RESET		02
‡ IC101	XT898100	IC	LHMN5HXD	IC	PROGRAM 32M		
‡ IC103	XT339A00	IC	M5M51008BP-70LL	IC	SRAM 1M		
IC104	XS444A00	IC	M5M44260CTP-7	IC	DRAM 4M		16
‡ IC104	XT810A00	IC	MSM514260C-70	IC	DRAM 4M		
IC105	XL123A00	IC	TC74AC139P	IC	DECODER		03
IC201	XS724A00	IC	TC203C060AF-001	IC	SWP00M		09
‡ IC202	XT615A00	IC		IC	WAVE		
IC203	XS434A00	IC	LH64256CZ-70	IC	70NS DRAM		08
IC301	XM145A00	IC	UPD63200GS	IC	D/A CONVERTER		07
IC501	TR037400	IC	TC74HC374AP	IC	D.FF		06
IC502	XG658A00	IC	TC74AC32P	IC	OR		02
IC601	TR037400	IC	TC74HC374AP	IC	D.FF		06
IC701	XL450A00	IC	PQ05RA1	IC	REGURATOR +5V 1.0A		03
‡ IC702	XT625A00	IC	S-81250SGY-Z	IC	REGURATOR +5V		
‡ IC703	XT333A00	IC	UPC29M33HF	IC	REGURATOR +3.3V		
IC704	XQ774A00	IC	PQ09RA1	IC	REGURATOR +9V 1.0A		03
	VF344000	Resistor Array	RGLE9X473J	抵抗アレイ			01
	VG733400	Resistor Array	EXB-Z05E 47K X 4	抵抗アレイ			01
‡	VY882100	Resistor Array	EXBF14V221J	抵抗アレイ			
	VG733700	Resistor Array	EXB-Z09E 47K X 8	抵抗アレイ			01
	VK165500	Digital Transistor	DTC123JS TP	デジタルトランジスタ			01
	VT455400	Digital Transistor	DTB123YS TP	デジタルトランジスタ			01
‡	VY849500	Circuit Board	DM-JK	DM-JKシート	(XT032B0)		
	VA078900	Jumper Wire	0.55	ジャンパー線			
	VC694800	Semiconductive Cera. Cap.	0.1000 25V Z	半導体セラコン			01
	UJ837100	Electrolytic Cap.	10.00 16.0V	ケミコン			01
	UN817470	Electrolytic Cap.-BP	47.00 6.3V	BPケミコン			01
	VB941200	Diode	1SS133,1SS176	ダイオード			01
	VB835000	Coil	FL5R200QNT	コイル 20U			01
	HF757100	Carbon Resistor	10.0K 1/4 J	カーボン抵抗			01
	HF757470	Carbon Resistor	47.0K 1/4 J	カーボン抵抗			01
	HF755270	Carbon Resistor	270.0 1/4 J	カーボン抵抗			01
	HF755220	Carbon Resistor	220.0 1/4 J	カーボン抵抗			01

‡ New Parts（新規部品）

ランク：Japan only

REF NO.	PART NO.	DESCRIPTION		部品名	REMARKS	QTY	ランク
	HF757220	Carbon Resistor	22.0K 1/4 J	カーボン抵抗			01
	HF755100	Carbon Resistor	100.0 1/4 J	カーボン抵抗			01
	HF756100	Carbon Resistor	1.0K 1/4 J	カーボン抵抗			01
CN01	VK025200	Wire Trap	52147 8P TE	ワイヤートラップ			01
IC01	XP094A00	IC	MC34051P	IC	LINE TRANCEIVER		05
IC02	TG142250	IC	SN74HCU04N	IC	INVERTER		01
JK01	VB312600	Phone Jack	JACK(BL)YKB21-5012	ホーンコネクタ（黒）	SUSTAIN		02
	VJ107200	DIN Connector	JACK 5P YKF51-5050	DINコネクタ	MIDI-IN,MIDI-OUT		01
JK04	VM761000	DIN Connector	DINJACK 8P MD-S810	複合コネクタ	TO HOST		03
	VG181900	Photo Coupler	PC-900V	フォトカプラ			03
SW01	VQ665200	Slide Switch	SSSF144-S06N-0	スライドSW	HOST SELECT		03
TR01	IC174070	Transistor	2SC1740S R,S	トランジスタ			01
TR02	IC174070	Transistor	2SC1740S R,S	トランジスタ			01
	VM898600	Ferrite Bead	EXC-ELDR35V	フェライトビーズ			01
	VU648100	Circuit Board	MK-L	MK-Lシート	(XR564B0)		17
	VB941200	Diode	1SS133,1SS176	ダイオード			01
	VK025600	Wire Trap	52147 12P TE	ワイヤートラップ			01
	VK025100	Wire Trap	52147 7P TE	ワイヤートラップ			01
	VU648200	Circuit Board	MK-H	MK-Hシート	(XR565B0)		15
	VB941200	Diode	1SS133,1SS176	ダイオード			01
	VK025600	Wire Trap	52147 12P TE	ワイヤートラップ			01
	VK024900	Wire Trap	52147 5P TE	ワイヤートラップ			01
	VU494600	Circuit Board	MKS2 16M	MKS2シート	(XR736C0)		25
	--	Vibration-proof Tape	10X64X0.5	防振テープ	(VK34680)		
	VA078900	Jumper Wire	0.55	ジャンパー線			
	FG651220	Ceramic Capacitor-SL	22P 50V J	セラコン（SL）			01
	UJ828100	Electrolytic Cap.	100.00 10.0V	ケミコン			01
	VD930900	Semiconductive Cera. Cap.	0.1000 25V M	半導体セラコン			01
	HF456470	Carbon Resistor	4.7K 1/4 J	カーボン抵抗			01
	HF457470	Carbon Resistor	47.0K 1/4 J	カーボン抵抗			01
CL1	VN002100	Ceramic Resonator	CST8.00MTW140	セラミック振動子			02
CL1	VQ305500	Ceramic Resonator	8.00M EFOEC8004T3	セラミック振動子			02
CN1	VF728300	Connector	52147 6P TE	コネクタ			01
CN2	VK025600	Wire Trap	52147 12P TE	ワイヤートラップ			01
CN3	VK025100	Wire Trap	52147 7P TE	ワイヤートラップ			01
CN4	VK024900	Wire Trap	52147 5P TE	ワイヤートラップ			01
IC1	XR951A00	IC	HD63B05V0F07P	IC	CPU		06
RA1	VH373200	Resistor Array	RGLE12X473J	抵抗アレイ			01
*	VY850000	Circuit Board	PN	PNシート	(XT684A0)		
	VZ057400	Lamp	0.57W T4.2 6.3V 250M	ランプ 6.3V			02
	VA078900	Jumper Wire	0.55	ジャンパー線			
RE	VU481300	Encoder	REB161 PVB 15F	16形エンコーダ	Dial		03
	VB941200	Diode	1SS133,1SS176	ダイオード			01
LED1	VC341300	LED	SLZ-190B-01 RE	LED	REVOICE		01
LED2	VI921400	LED	SLZ-190B-10-T2 RE	LED	AUTO ACCOMPANIMENT ON/OFF START/STOP,RECORD,INTRO, MAIN AUTO FILL A/B,ENDING		01
W001	--	Connector Assembly	13P L=350 DM-PN1	DM-PN1束線	(VY85070)		
W002	--	Connector Assembly	10P L=310 DM-PN2	DM-PN2束線	(VY85080)		
W003	--	Connector Assembly	5P L=170 PN1	PN1束線	(VY85130)		
W004	--	Connector Assembly	3P L=210 PN2	PN2束線	(VY85140)		
W005	--	Connector Assembly	4P L=120 PN3	PN3束線	(VY85150)		
CN100	VI879100	Cable Holder	51048 13P TE	ケーブルホルダー			01
CN101	VI878800	Cable Holder	51048 10P TE	ケーブルホルダー			01
CN102	VK024700	Wire Trap	52147 3P TE	ワイヤートラップ			01
CN103	VI878100	Cable Holder	51048 3P TE	ケーブルホルダー			01
CN104	VI878100	Cable Holder	51048 3P TE	ケーブルホルダー			01
CN105	VI878300	Cable Holder	51048 5P TE	ケーブルホルダー			01
CN106	VI878300	Cable Holder	51048 5P TE	ケーブルホルダー			01
CN107	VI878200	Cable Holder	51048 4P TE	ケーブルホルダー			01
CN108	VI878200	Cable Holder	51048 4P TE	ケーブルホルダー			01

* New Parts（新規部品）

ランク：Japan only

REF NO.	PART NO.	DESCRIPTION		部品名	REMARKS	QTY	ランク
	VY729300	Membrane Switch	C 15	メンブレンスイッチーC	※ Refer to the figure shown below.		02
	VY729200	Membrane Switch	L 21	メンブレンスイッチーL			03
	VY729400	Membrane Switch	R 20	メンブレンスイッチーR			03
	VY729500	Membrane Switch	UL 4	メンブレンスイッチーUL			01
	VY729600	Membrane Switch	UR 3	メンブレンスイッチーUR			01
*	XT278A00	Speaker	12.0cm 4ohm 6W	スピーカ		2	
*	VZ320900	LCD	DM150A-7J	液晶ディスプレイ			

* New Parts（新規部品）

ランク：Japan only

• Membrance Switch (メンブレンスイッチ)

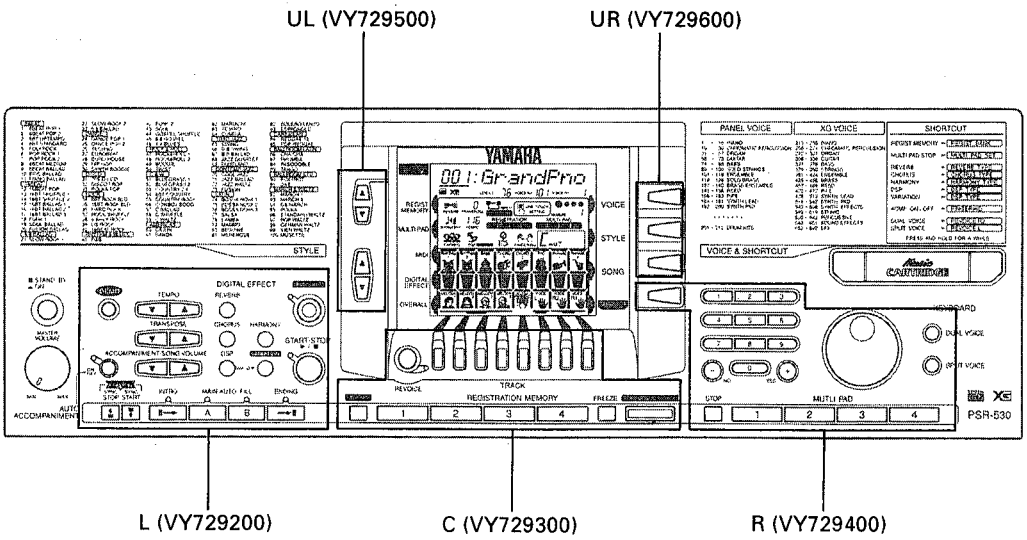

■ PSR-530 CIRCUIT DIAGRAM (回路図) <DM, MKS2, PN>

PN (1/5~5/5)

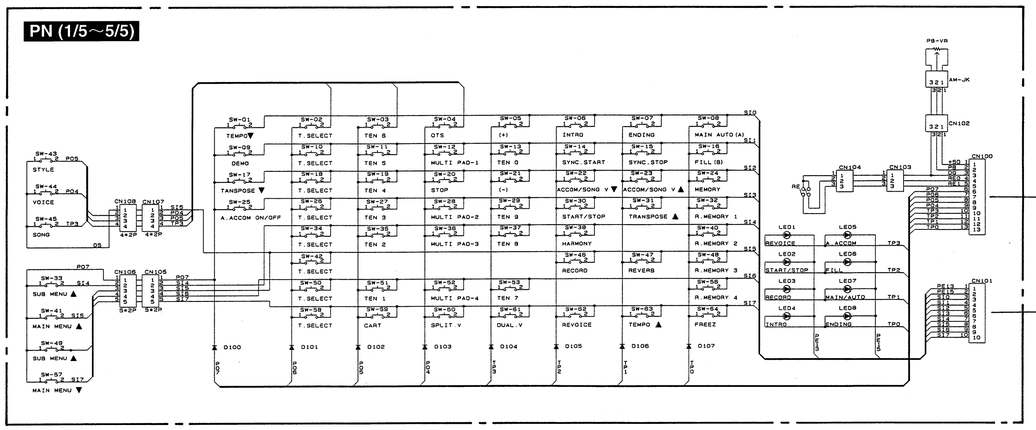

MKS 2

(Key scan section)

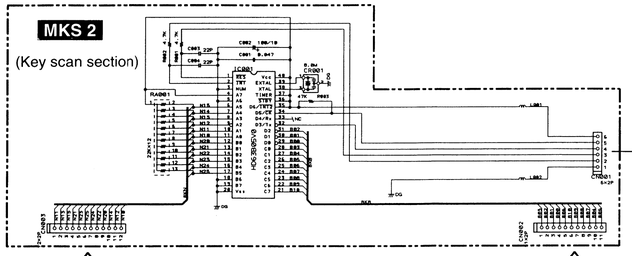

Key board

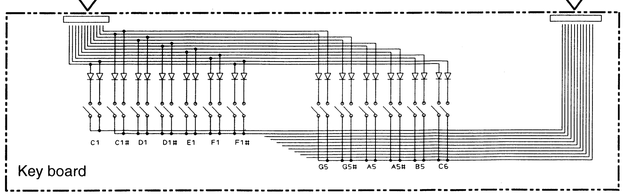

Notes)
Circuit Board: PN (VY850000) XT684A0
1. **Diode**
D 100-107: 1SS133,1SS176 (VB941200)
2. **LED**
LED1: SLZ-190B-01 RE (VC341300) REVOICE
LED2-8: SLZ-190B-10-T2 RE (V921400) AUTO ACCOMPANIMENT ON/OFF, START/STOP, RECORD, INTRO, ENDING, MAIN AUTO FILL A/B
3. **Lamp**
: .57W T4.2 6.3V25 (VZ057400)
4. **Encoder**
RE : REB161 PVB 15F (VU481300)
5. **Membrane Switch**
MB-L: L 21 (VY729200)
MB-C: C 15 (VY729300)
MB-R: R 20 (VY729400)
MB-UL: UL 4 (VY729500)
MB-UR: UR 3 (VY729600)
6. **Cable Holder**
CN 100: 51048 13P (VI879100) to DM-CN502
CN 101: 51048 10P (VI878800) to DM-CN501
CN 103: 51048 3P (VI878100) to PN(2/5)-CN104
CN 104: 51048 3P (VI878100) to PN(1/5)-CN103
CN 105: 51048 5P (VI878300) to PN(3/5)-CN106
CN 106: 51048 5P (VI878300) to PN(1/5)-CN105
CN 107: 51048 4P (VI878200) to PN(4/5)-CN108
CN 108: 51048 4P (VI878200) to PN(1/5)-CN107
7. **Wire Trap**
CN 102: 52147 3P (VK024700) to AMJK(2/2)-CN102
8. **Connector Assembly**
W 001: 13P L=350 DM-PN1 (VY850700)
W 002: 10P L=310 DM-PN2 (VY850800)
W 003: 5P L=170 PN1 (VY851300)
W 004: 3P L=210 PN2 (VY851400)
W 005: 4P L=120 PN3 (VY851500)
9. **Jumper Wire**
: 0.55 (VA078900)

Notes)
Circuit Board: MKS2 (VU494600) XR736C0, XS829A0
1. **IC**
IC 1: HD63B05V0F07P (XR951A00) CPU
2. **Ceramic Capacitor-SL**
C 1,2: 22P 50V J (FG651220)
3. **Semiconductive Cera. Cap.**
C 4: 0.1000 25V M (VD930900)
4. **Electrolytic Cap.**
C 3: 100.00 10.0V (UJ828100)
5. **Carbon Resistor**
R 1,2: 4.7K 1/4 J (HF456470)
R 3: 47.0K 1/4 J (HF457470)
6. **Resistor Array**
RA 1: RGLE12X473J (VH373200)
7. **Ceramic Resonator**
CL 1: CST8.00MTW140 (VN002100) or 8.00M EFOEC8004 (VG305500)
8. **Connector**
CN 1: 52147 6P (VF728300) to DM-CN802
9. **Wire Trap**
CN 2: 52147 12P (VK025600) to MK-L
CN 3: 52147 7P (VK025100) to MK-L
CN 4: 52147 5P (VK024900) to MK-H
10. **Jumper Wire**
: 0.55 (VA078900)

Notes)
Circuit Board: MK-L (VU648100) XR564B0
1. **Diode**
2: 1SS133,1SS176 (VB941200)
2. **Wire Trap**
5: 52147 12P (VK025600) to MKS2-CN2
5: 52147 12P (VK025600) to MK-H
6: 52147 7P (VK025100) to MKS2-CN3

Notes)
Circuit Board: MK-H (VU648200) XR565B00
1. **Diode**
2: 1SS133,1SS176 (VB941200)
2. **Wire Trap**
5: 52147 12P (VK025600) to MK-L
6: 52147 5P (VK024900) to MKS2-CN4

DM

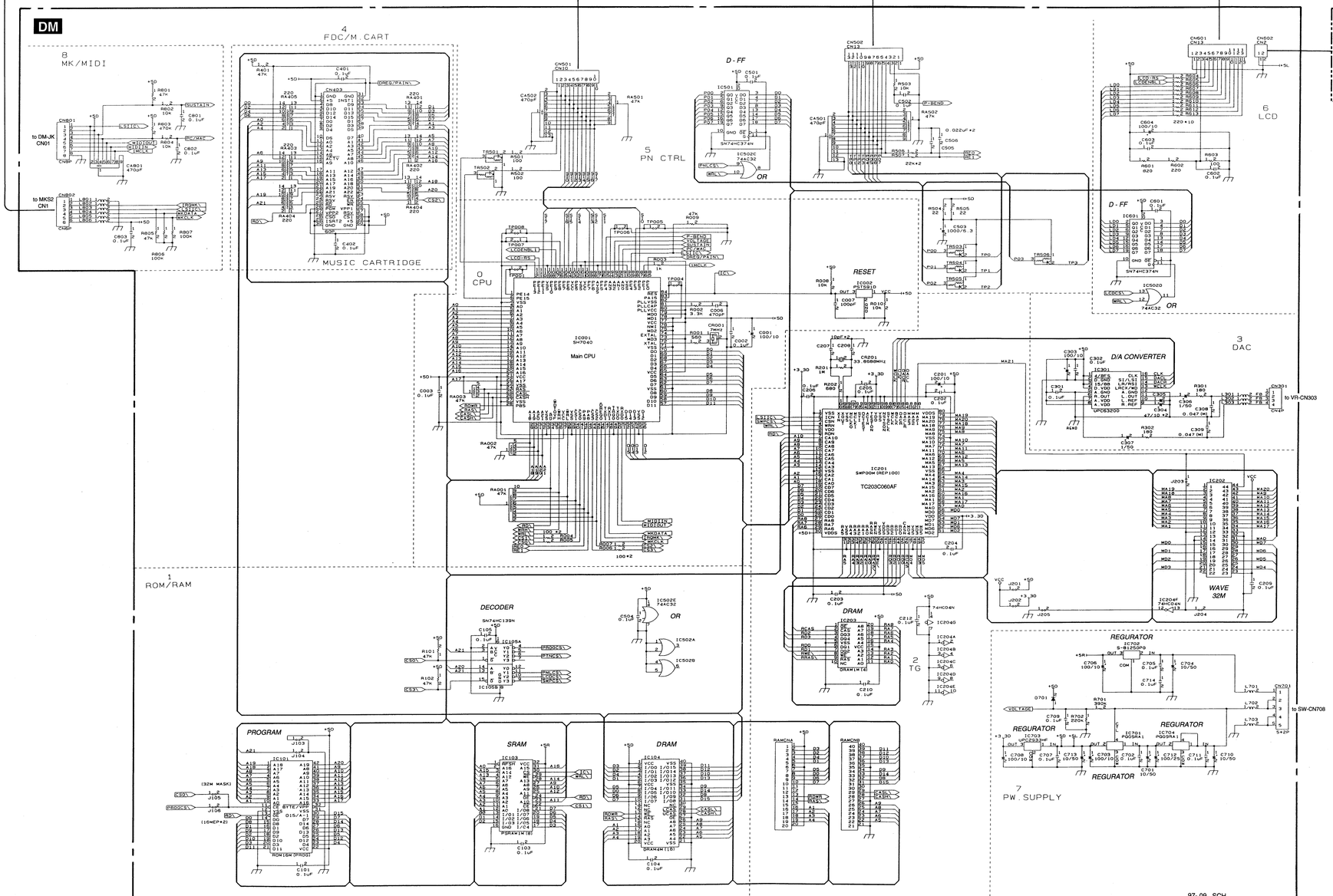

Notes)
Circuit Board: DM (VY849400) XT031B0 CE
Circuit Board: DM (VZ616200) XT031B0 FCC
1. **IC**
IC 001: HD6437042E00F (XT125A00) CPU
IC 002: IC-PST591D-2 (XR902A00) RESET
IC 101: LHMN5HXD (XT898100) PROGRAM 32M
IC 103: MSM51008BP-70LL (XT339A00) SRAM 1M
IC 104: MSM514260C-70 (XT810A00) DRAM or M5M44260CTP-7 (XS444A00) DRAM 4M
IC 105: TC74AC138P (XL123A00) DECODER
IC 201: TC203C060AF-001 (XS724A00) SWP00M
IC 202: (XT615A00) WAVE ROM
IC 203: LH64256CZ-70 (XS434A00) 70NS DRAM
IC 301: UPD63200GS (XM145A00) D/A CONVERTER
IC 501,601: TC74HC374AP (IR037400) D.FF
IC 502: TC74AC32P (XG658A00) OR
IC 701: PQ05RA1 (XL450A00) REGURATOR +5V
IC 702: S-81250SGY-Z (XT625A00) REGURATOR +5V
IC 703: UPC29M33HF (XT333A00) REGURATOR +3.3V
IC 704: PQ09RA1 (XQ774A00) REGURATOR +9V
2. **Digital Transistor**
TR 501,502: DTC123JS TP (VK165500)
TR 503-506: DTB123YS TP (VT455400)
3. **Diode**
D 701: 1SS133,1SS176 (VB941200)
4. **IC Socket**
DICF-42CS-E (VK863100)
5. **Mylar Capacitor**
C 308,309: 0.0470 50V J (UA654470)
6. **Semiconductive Cera. Cap.**
C 002,003,101-105, 202-205,206,209, 210,301,302,401, 402,501,502,504, 601-603,702,705, 707,709,711,714, 801-803: 0.1000 25V Z (VC694800)
7. **Ceramic Capacitor**
C 006: 470P 50V K (FG612470)
C 007: 100P 50V J (FG652100)
C 207,208: 10P 50V D (FG651100)
C 505,506: 0.022 50V Z (UG444220)
8. **Electrolytic Cap.**
C 001,201,303,604, 703,706,708: 100.00 10.0V (UJ828100)
C 304,305: 47.00 10.0V (UJ827470)
C 306,307: 1.00 50.0V (UJ866100)
C 503: 1000 6.3V (UJ819100)
C 701,704,710, 713: 10.00 50.0V (UJ867100)
C 712: 100.00 25.0V (UJ848100)
9. **Ceramic Capacitor Array**
CA 501,502: 470P X12 (VT487100)
CA 801: 100P X8 50V M (VH484100)
10. **Carbon Resistor**
R 001: 560.0 1/4 J (HF755560)
R 002: 3.3K 1/4 J (HF756330)
R 003: 1.0K 1/4 J (HF756100)
R 004-007,501, 502: 100.0 1/4 J (HF755100)
R 008,010,503, 802,804: 10.0K 1/4 J (HF757100)
R 009,101,102, 401,801,805: 47.0K 1/4 J (HF757470)
R 201: 1.0M 1/4 J (HF759100)
R 202: 680.0 1/4 J (HF755680)
R 301,302: 180.0 1/4 J (HF755180)
R 504,505: 22.0 1/4 J (HF754220)
R 506,507,702: 22.0K 1/4 J (HF757220)
R 601: 820.0 1/4 J (HF755820)
R 602,604-613: 220.0 1/4 J (HF755220)
R 701: 39.0K 1/4 J (HF757390)
R 803: 470.0K 1/4 J (HF758470)
R 806,807: 100.0K 1/4 J (HF758100)
11. **Resistor Array**
RA 001: RGLE9X473J (VF344000)
RA 002,003: EXB-Z05E 47K X 4 (VG733400)
RA 401-405: EXBF14V221J (VY682100)
RA 501,502: EXB-Z09E 47K X 8 (VG733700)
12. **Coil**
L 801-806: FL5R200QNT (VB835000)
13. **Ferrite Bead**
L 301-303, 701-703: EXC-ELDR35V (VM898600)
14. **Quartz Crystal Unit**
CR 201: 33.8688M AT-49 (VT487600)
15. **Ceramic Resonator**
CR 001: 7.00M EFOEC7004T (VY856300)
16. **Connector Base Post**
CN 301: PH- 4P TE (VB390000) to VR-CN303
CN 403: PSB4D 60P (VU538700) for Music cartridge
CN 501: 52147 10P (VF728200) to PN(1/5)-CN101
CN 802: 52147 6P (VF728300) to MKS2-CN1
17. **Wire Trap**
CN 502: 52147 13P (VK025700) to PN(1/5)-CN100
CN 601: 52147 13P (VK025700) to LCD
CN 602: 52147 2P (VK024600) to LCD
CN 701: 52147 5P (VK024900) to SW-CN708
CN 801: 52147 8P (VK025200) to DM.JK-CN01
18. **Heat Sink**
HS 001: (VJ636100)
19. **Jumper Wire**
J 104,105,202, 204,603: 0.55 (VA078900)

●PQ05RA1(XL450A00) REGURATOR +5V ●PQ09RA1(XQ774A00) REGURATOR +9V 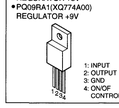	●S81250SGY-Z(XT625A00) REGURATOR +5V 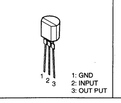	●upc29M33HF(XT333A00) REGURATOR +3.3V 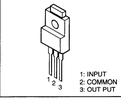	●ISS133,ISS176(VB941200) DIODE 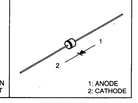

■ PSR-530 CIRCUIT DIAGRAM (回路図) <AM, HP, SW, VR, AM-JK, DM-JK>

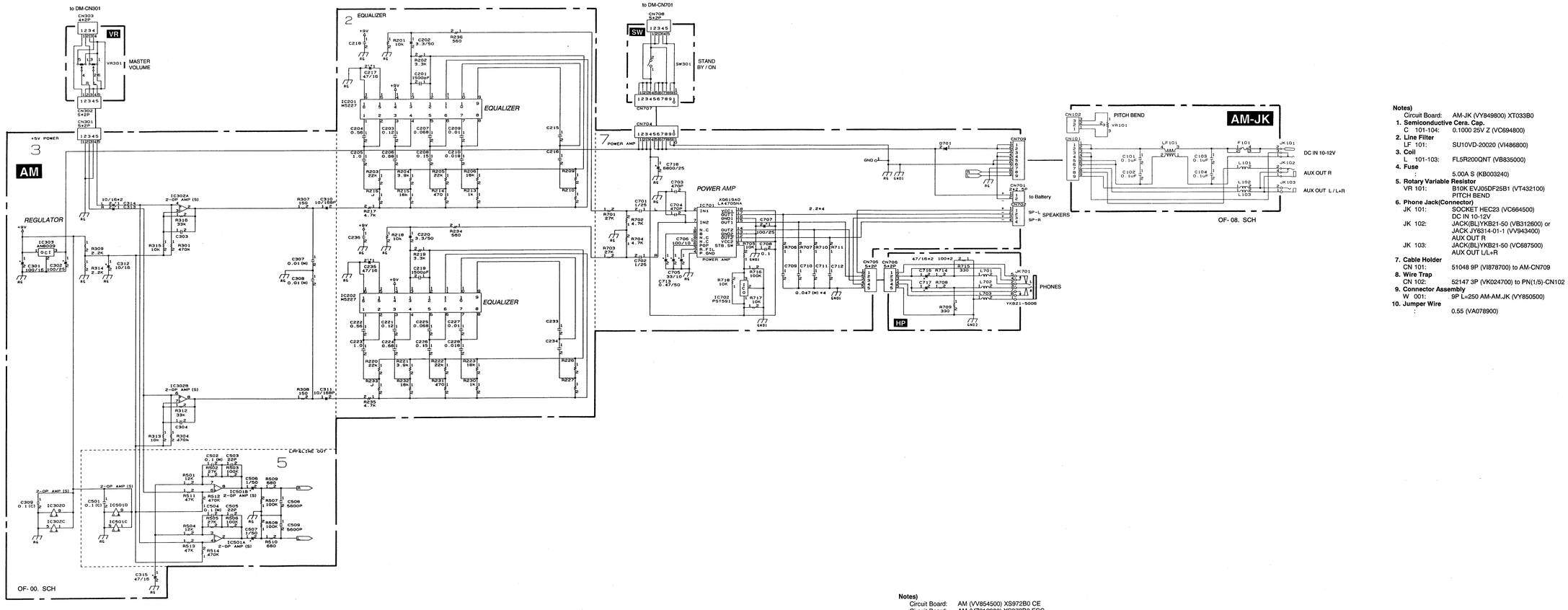

Notes)
Circuit Board: AM-JK (VY849800) XT033B0
1. **Semiconductive Cera. Cap.**
C 101-104: 0.1000 25V Z (VC694800)
2. **Line Filter**
LF 101: SU10VD-20020 (VI486800)
3. **Coil**
L 101-103: FL5R200QNT (VB835000)
4. **Fuse**
F 101: 5.00A S (KB003240)
5. **Rotary Variable Resistor**
VR 101: B10K EVJ05DF25B1 (VT432100)
PITCH BEND
6. **Phone Jack(Connector)**
JK 101: SOCKET HEC23 (VC664500)
DC IN 10-12V
JK 102: JACK(BL)YKB21-50 (VB312600) or
JACK JY6314-01-1 (VV943400)
AUX OUT R
JK 103: JACK(BL)YKB21-50 (VC687500)
AUX OUT L/L+R
7. **Cable Holder**
CN 101: 51048 9P (VI878700) to AM-CN709
8. **Wire Trap**
CN 102: 52147 3P (VK024700) to PN(1/5)-CN102
9. **Connector Assembly**
W 001: 9P L=250 AM-AM.JK (VY850500)
10. **Jumper Wire**
: 0.55 (VA078900)

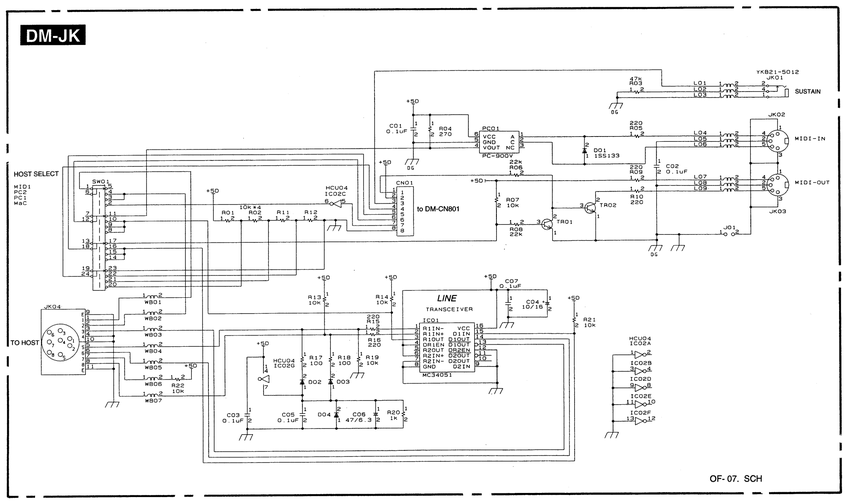

Notes)
Circuit Board: DM-JK (VY849600) XT032B0
1. **IC**
IC 01: MC34051P (XP094A00)
LINE TRANCEIVER
IC 02: SN74HCU04N (IG142250) INVERTER
2. **Transistor**
TR 01,02: 2SC1740S R,S (IC174070)
3. **Diode**
D 01-04: 1SS133,1SS176 (VB941200)
4. **Photo Coupler**
PC 01: PC-900V (VG181900)
5. **Electrolytic Cap.**
C 04: 10.00 16.0V (UJ837100)
C 06: 47.00 6.3V (UN817470)
6. **Semiconductive Cera. Cap.**
C 01-03,05,07: 0.1000 25V Z (VC694800)
7. **Carbon Resistor**
R 01,02,07,11-14, 19,21: 10.0K 1/4 J (HF757100)
R 03: 47.0K 1/4 J (HF757470)
R 04: 270.0 1/4 J (HF755270)
R 05,09,10, 15,16: 220.0 1/4 J (HF755220)
R 06,08: 22.0K 1/4 J (HF757220)
R 17,18: 100.0 1/4 J (HF755100)
R 20: 1.0K 1/4 J (HF756100)
8. **Coil**
L 01-09: FL5R200QNT (VB835000)
9. **Ferrite Bead**
WB01-07: EXC-ELDR35V (VM898600)
10 **Slide Switch**
SW01: SSSF144-S06N-0 (VQ665200)
HOST SELECT
11. **Phone Jack**
JK 01: JACK(BL)YKB21-50 (VB312600)
SUSTAIN
12. **DIN Connector**
JK 02: JACK 5P YKF51-50 (VJ107200)
MIDI IN
JK 03: JACK 5P YKF51-50 (VJ107200)
MIDI OUT
JK 04: DINJACK 8P MD-S8 (VM761000)
TO HOST
13. **Wire Trap**
CN 01: 52147 8P (VK025200) to DM-CN801
14. **Jumper Wire**
: 0.55 (VA078900)

Notes)
Circuit Board: AM (VV854500) XS972B0 CE
Circuit Board: AM (VZ616300) XS972B0 FCC
Circuit Board: AM (--) XS972B0
Circuit Board: VR (--) XS972B0
Circuit Board: HP (--) XS972B0
Circuit Board: SW (--) XS972B0
1. **IC**
IC 201,202: M5227P (XF751A00) EQUALIZER
IC 302,501: UPC4570HA (XB247A00) OP AMP
IC 303: AN77L09-TA (XT676A00) REGURATOR +9V
IC 701: LA4705NA (XQ619A00) POWER AMP 17W
2. **Diode**
D 701: 20E1-FC4 (VL723600) or LT2A02-E (VY717100)
3. **Mylar Capacitor**
C 207,225: 0.0680 50V J (UA654680)
C 209,216,227, 234,307,308: 0.0100 50V J (UA654100)
C 210,228: 0.0180 50V J (UA654180)
C 709-712: 0.0470 50V J (UA654470)
4. **Monolithic Mylar Capacitor**
C 203,221: ECQ-V1H124JL3 (VR168400)
C 204,222: ECQ-V1H564JL3 (VR169300)
C 205,223: ECQ-V1H105JL3 (VU838100)
C 206,224: ECQ-V1H684JL3 (VR169400)
C 208,226: ECQ-V1H154JL3 (VR168500)
C 502,504: ECQ-V1H104JL3 (VR168300)
5. **Ceramic Capacitor**
C 201,219: 1500P 50V K (FG613150)
C 215,233: 100P 50V K (FG612100)
C 503,505: 22P 50V J (FG651220)
C 508,509: 5600P 50V K (FG613560)
C 703,704: 470P 50V K (FG612470)
6. **Monolithic Ceramic Cap.**
C 701,702: 1.000 25V Z (VT757800)
7. **Semiconductive Cera. Cap.**
C 218,236, 309,501,708: 0.1000 25V Z (VC694800)
8. **Electrolytic Cap.**
C 202,220: 3.30 50.0V (UN866330)
C 217,235,315, 716,717: 47.00 16.0V (UJ837470)
C 301: 100.00 16.0V (UJ838100)
C 302,707: 100.00 25.0V (UJ848100)
C 310,311: 10.00 16.0V (UN837100)
C 312,313,314: 10.00 16.0V (UJ837100)
C 506,507: 1.00 50.0V (UJ866100)
C 705: 33.00 10.0V (UJ827330)
C 706: 100.00 10.0V (UJ828100)
C 713: 0.47 50.0V (UJ865470)
C 718: 6800 25.0V (VT848900)
9. **Coil**
L 701-703: FL5R200QNT (VB835000)
10. **Carbon Resistor**
R 201,218,313, 315,705: 10.0K 1/4 J (HF757100)
R 202,219: 3.3K 1/4 J (HF756330)
R 203,205,210, 220,222,227: 22.0K 1/4 J (HF757220)
R 204,221: 3.9K 1/4 J (HF756390)
R 206,215,223, 232: 18.0K 1/4 J (HF757180)
R 209,213,226, 230: 1.0K 1/4 J (HF756100)
R 214,231: 470.0 1/4 J (HF755470)
R 217,235: 4.7K 1/4 J (HF756470)
R 234,236: 560.0 1/4 J (HF755560)
R 301,304, 512,514: 470.0K 1/4 J (HF758470)
R 307,308: 150.0 1/4 J (HF755150)
R 309,314: 2.2K 1/4 J (HF756220)
R 511,513: 47.0K 1/4 J (HF757470)
R 312,316: 33.0K 1/4 J (HF757330)
R 501,504: 12.0K 1/4 J (HF757120)
R 502,505,701, 703: 27.0K 1/4 J (HF757270)
R 503,506-508: 100.0K 1/4 J (HF758100)
R 509,510: 680.0 1/4 J (HF756680)
R 702,704: 6.8K 1/4 J (HF756680)
R 706,707,710, 711: 2.2 1/4 J (HF753220)
R 708,714: 100.0 1/4 J (HF755100)
R 709,715: 330.0 1/4 J (HF755330)
11. **Rotary Variable Resistor**
VR 301: A10.0K XV0141GPV (VY711800) or
A10.0K XV0141GPV (VZ048400)
MASTER VOLUME
12. **Push Switch**
SW 301: SDDLB1 J,UC,CEE (VY980400)
STAND BY/ON
13. **Phone Jack**
JK 701: JACK YKB21-50 (LB101870) or
JACK HTJ064-0 (VV943300)
PHONES
14. **Base Post Connector**
CN 701: XH 2P (LB918020) to Battery
CN 702: XH 4P (LB918040) to Speakers
15. **Cable Holder**
CN 704: 51048 10P (VI878800) to SW-CN707
CN 707: 51048 10P (VI878800) to AM-CN704
CN 706: 51048 5P (VI878300) to AM-CN705
CN 708: 51048 5P (VI878300) to DM-CN701
16. **Wire Trap**
CN 705: 52147 5P (VK024900) to HP-CN706
CN 709: 52147 9P (VK025300) to AM.JK(1/2)-CN101
17. **Connector Assembly**
W 001: 5P L=250 DM-SW (VY850200)
W 002: 10P L=300 AM-SW (VY850400)
W 003: 5P L=600 AM-HP (VY850300)
W 005: 4P L=360 DM-VR (VY851900)
W 006: 5P L=250 AM-VR (VY852000)
W 007: L=120 AM-DM EARTH(VY852100)
18. **Jumper Wire**
J 2:
R 216,233,718: 0.55 (VA078900)

PSR-530