PORTATONE

PSR-293 / PSR-295

SERVICE MANUAL



PSR-293



PSR-295

■ CONTENTS

SPECIFICATION 3
PANEL LAYOUT 4
CIRCUIT BOARD LAYOUT & WIRING 6
BLOCK DIAGRAM 7
DISASSEMBLY PROCEDURE 8
LSI PIN DESCRIPTION 13
IC BLOCK DIAGRAM 14
CIRCUIT BOARDS 15
TEST PROGRAM 22
INITIALIZATION 25
USER DATA BACKUP 26
SYSTEM BOOTING FLOW CHART 27
MIDI IMPLEMENTATION CHART 28
PARTS LIST
OVERALL CIRCUIT DIAGRAM

YAMAHA

HAMAMATSU, JAPAN

PK 001725

Copyright (c) Yamaha Corporation. All rights reserved. PDF-K444 IT '04.6

IMPORTANT NOTICE

This manual has been provided for the use of authorized Yamaha Retailers and their service personnel. It has been assumed that basic service procedures inherent to the industry, and more specifically Yamaha Products, are already known and understood by the users, and have therefore not been restated.

WARNING: Failure to follow appropriate service and safety procedures when servicing this product may result in personal injury, destruction of expensive components, and failure of the product to perform as specified. For these reasons, we advise all Yamaha product owners that all service required should be performed by an authorized Yamaha Retailer or the appointed service representative.

IMPORTANT: The presentation or sale of this manual to any individual or firm does not constitute authorization, certification or recognition of any applicable technical capabilities, or establish a principle-agent relationship of any form.

The data provided is believed to be accurate and applicable to the unit(s) indicated on the cover. The research, engineering, and service departments of Yamaha are continually striving to improve Yamaha products. Modifications are, therefore, inevitable and changes in specification are subject to change without notice or obligation to retrofit. Should any discrepancy appear to exist, please contact the distributor's Service Division.

WARNING: Static discharges can destroy expensive components. Discharge any static electricity your body may have accumulated by grounding yourself to the ground bus in the unit (heavy gauge black wires connect to this bus).

IMPORTANT: Turn the unit OFF during disassembly and part replacement. Recheck all work before you apply power to the unit.

WARNING: CHEMICAL CONTENT NOTICE!

The solder used in the production of this product contains LEAD. In addition, other electrical/electronic and/or plastic (where applicable) components may also contain traces of chemicals found by the California Health and Welfare Agency (and possibly other entities) to cause cancer and/or birth defects or other reproductive harm.

DO NOT PLACE SOLDER, ELECTRICAL/ELECTRONIC OR PLASTIC COMPONENTS IN YOUR MOUTH FOR ANY REASON WHATSOEVER!

Avoid prolonged, unprotected contact between solder and your skin! When soldering, do not inhale solder fumes or expose eyes to solder/flux vapor!

If you come in contact with solder or components located inside the enclosure of this product, wash your hands before handling food.

■ WARNING

Components having special characteristics are marked ⚠ and must be replaced with parts having specification equal to those originally installed.

■ SAVING DATA

Saving and backing up your data



Be sure to perform it

The panel settings and some other types of data will be lost if the power is turned off before they are saved. Be sure to save data you want to keep to the internal Flash Memory before turning off the power. Saved data may be lost due to malfunction or incorrect operation. Save the important data to your computer.

■ SPECIFICATIONS

Keyboards
- 61 standard-size keys (C1 - C6), with Touch Response.

Display
- Large multi-function LCD display (backlit)

Setup
- STANDBY/ON
- MASTER VOLUME: MIN - MAX

Panel Controls
- SONG, VOICE, STYLE, EASY SONG ARRANGER, PERFORMANCE ASSISTANT, PC, LESSON L/R, LESSON MODE, LESSON REPEAT & LEARN, METRONOME, PORTABLE GRAND, DEMO, FUNCTION, TOUCH, HARMONY, DUAL, SPLIT, TEMPO/TAP, [0] - [9], [+], [-], CATEGORY, Dial, ACMP ON/OFF, SYNC STOP, SYNC START, START/STOP, INTRO/ENDING/rit., MAIN/AUTO FILL, REGIST. MEMORY ([●] (MEMORY/BANK), [1], [2]), SONG MEMORY (REC, [1] - [5], [A])

Voice
- 114 panel voices + 12 drum kits + 359 XGlite voices + 2 XGlite optional voices
- Polyphony: 32
- DUAL
- SPLIT

Style
- 135 Preset Styles
- Style Control: ACMP ON/OFF, SYNC STOP, SYNC START, START/STOP, INTRO/ENDING/rit., MAIN/AUTO FILL
- Fingering: Multi fingering
- Style Volume

Education Feature
- Dictionary
- Lesson 1-3, Lesson Repeat & Learn

Registration Memory
- 8 banks x 2 types

Function
- VOLUME: Style Volume, Song Volume
- OVERALL: Tuning, Transpose, Split Point, Touch Sensitivity
- MAIN VOICE: Volume, Octave, Pan, Reverb Send Level, Chorus Send Level
- DUAL VOICE: Voice, Volume, Octave, Pan, Reverb Send Level, Chorus Send Level
- SPLIT VOICE: Voice, Volume, Octave, Pan, Reverb Send Level, Chorus Send Level
- EFFECT: Reverb Type, Chorus Type, Panel Sustain
- HARMONY: Harmony Type, Harmony Volume
- PC: PC1/PC2/Off
- MIDI: Local On/Off, External Clock, Initial Setup Send, Keyboard Out, Style Out, Song Out, Bulk Send
- METRONOME: Time Signature, Metronome Volume
- LESSON: Lesson Track (R), Lesson Track (L)
- UTILITY: Grade, Demo Cancel

Effects
- Reverb: 9 types
- Chorus: 4 types
- Harmony: 26 types

Song
- 30 Preset Songs + 5 User Songs + Accessory CD-ROM Songs (70)
- Song Clear, Track Clear
- Song Volume

Performance assistant technology

Recording
- Song
  User Song: 5 Songs
  Recording Tracks: 1, 2, 3, 4, 5, STYLE

MIDI
- Local On/Off
- Initial Setup Send
- External Clock
- Keyboard Out
- Style Out
- Song Out
- Bulk Send

Auxiliary jacks
- PHONES/OUTPUT, DC IN 12V, USB, SUSTAIN

Amplifier
- 3W + 3W

Speakers
- 12cm x 2 + 3cm x 2

Power Consumption
- 16W (When using PA-3C power adaptor)

Power Supply
- Adaptor: Yamaha PA-3C AC power adaptor
- Batteries: Six "D" size, R20P (LR20) or equivalent batteries

Dimensions (W x D x H)
- 952 x 388 x 146 mm
  (37-1/2" x 15-1/4" x 5-3/4")

Weight
- 7.0kg (15 lbs. 7 oz.) (not including batteries)

Supplied Accessories
- Music Rest
- Accessory CD-ROM
- Owner s Manual
- Song Book

Optional Accessories
- AC Power Adaptor: PA-3C
- Footswitch: FC4/FC5
- Keyboard Stand: L-2C/L-2L

■ PANEL LAYOUT

• Front Panel

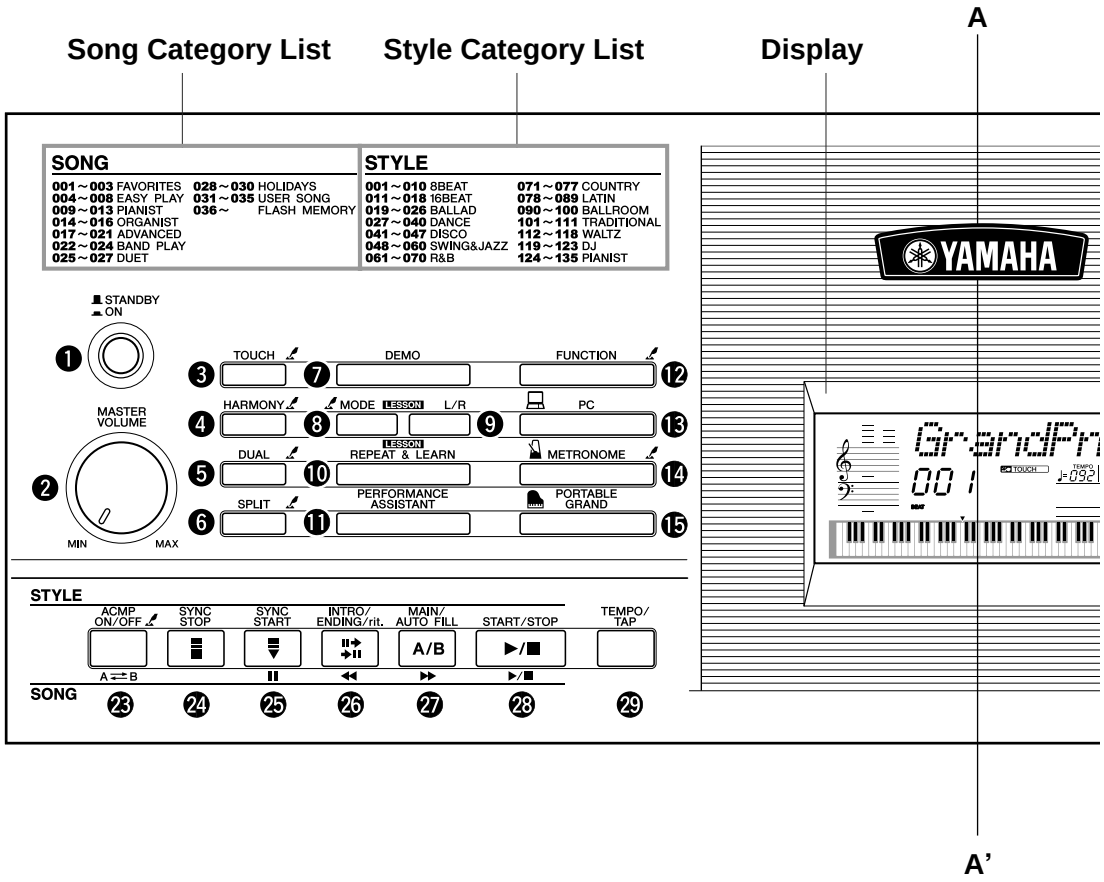

❶ [STANDBY/ON] switch
❷ [MASTER VOLUME] control
❸ [TOUCH] button
❹ [HARMONY] button
❺ [DUAL] button
❻ [SPLIT] button
❼ [DEMO] button
❽ [LESSON MODE] button
❾ [LESSON L/R] button
❿ [LESSON REPEAT & LEARN] button
⓫ [PERFORMANCE ASSISTANT] button
⓬ [FUNCTION] button
⓭ [PC] button
⓮ [METRONOME] button
⓯ [PORTABLE GRAND] button
⓰ Dial
⓱ CATEGORY buttons [▲▲], [▼▼]
⓲ [SONG] button
⓳ [EASY SONG ARRANGER] button
⓴ [STYLE] button
㉑ [VOICE] button
㉒ Number buttons [0] — [9], [+] and [-] buttons
㉓ [ACMP ON/OFF] / [A ⇄ B] button
㉔ [SYNC STOP] button
㉕ [SYNC START] / [❚❚] button
㉖ [INTRO/ENDING/rit.] / [◀◀] button
㉗ [MAIN/AUTO FILL] / [▶▶] button
㉘ [START/STOP] / [▶ / ■] button
㉙ [TEMPO/TAP] button
㉚ REGIST. MEMORY [●] (MEMORY/BANK), [1], [2] buttons
㉛ SONG MEMORY [REC], [1] — [5], [A] buttons

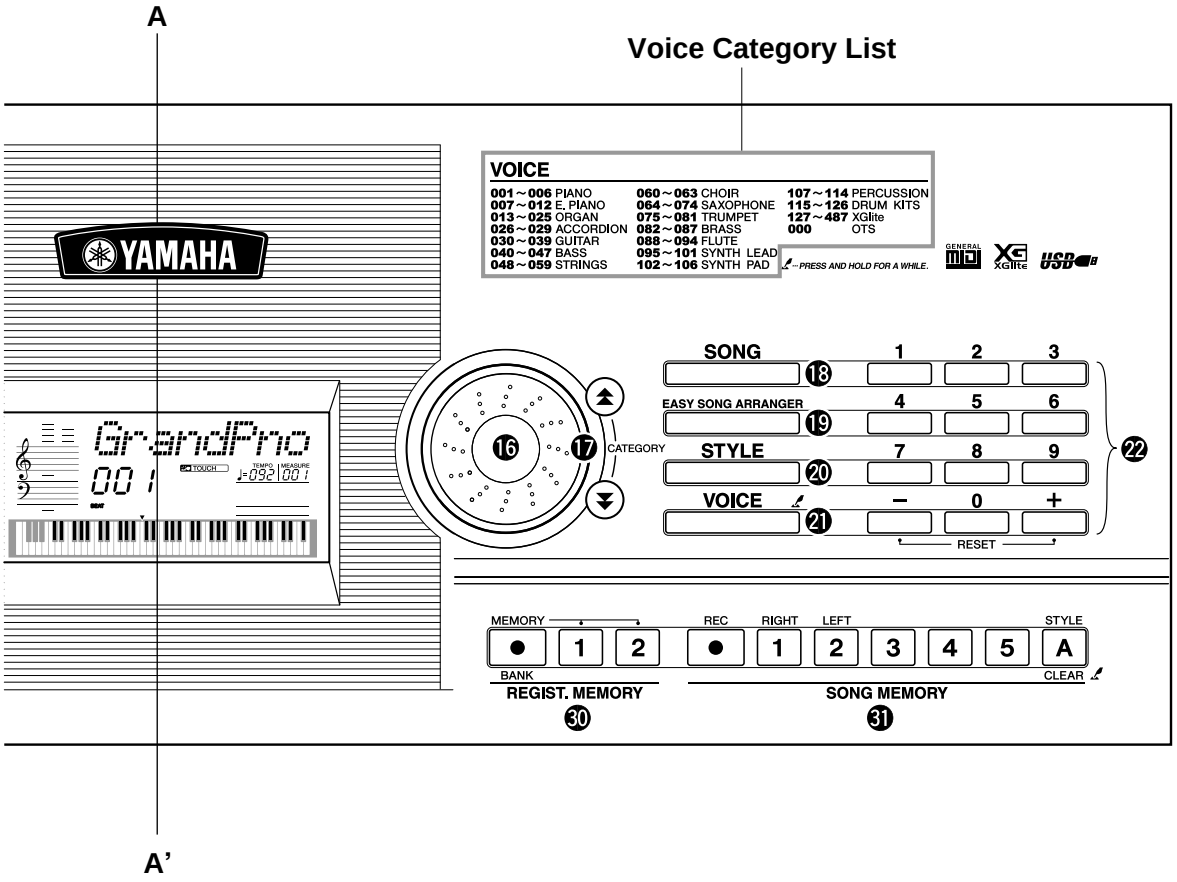

• Rear Panel

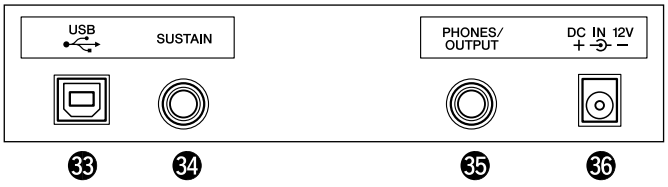

㉝ **USB terminal**
㉞ **SUSTAIN jack**
㉟ **PHONES/OUTPUT jack**
㊱ **DC IN 12V jack**

■ CIRCUIT BOARD LAYOUT & WIRING

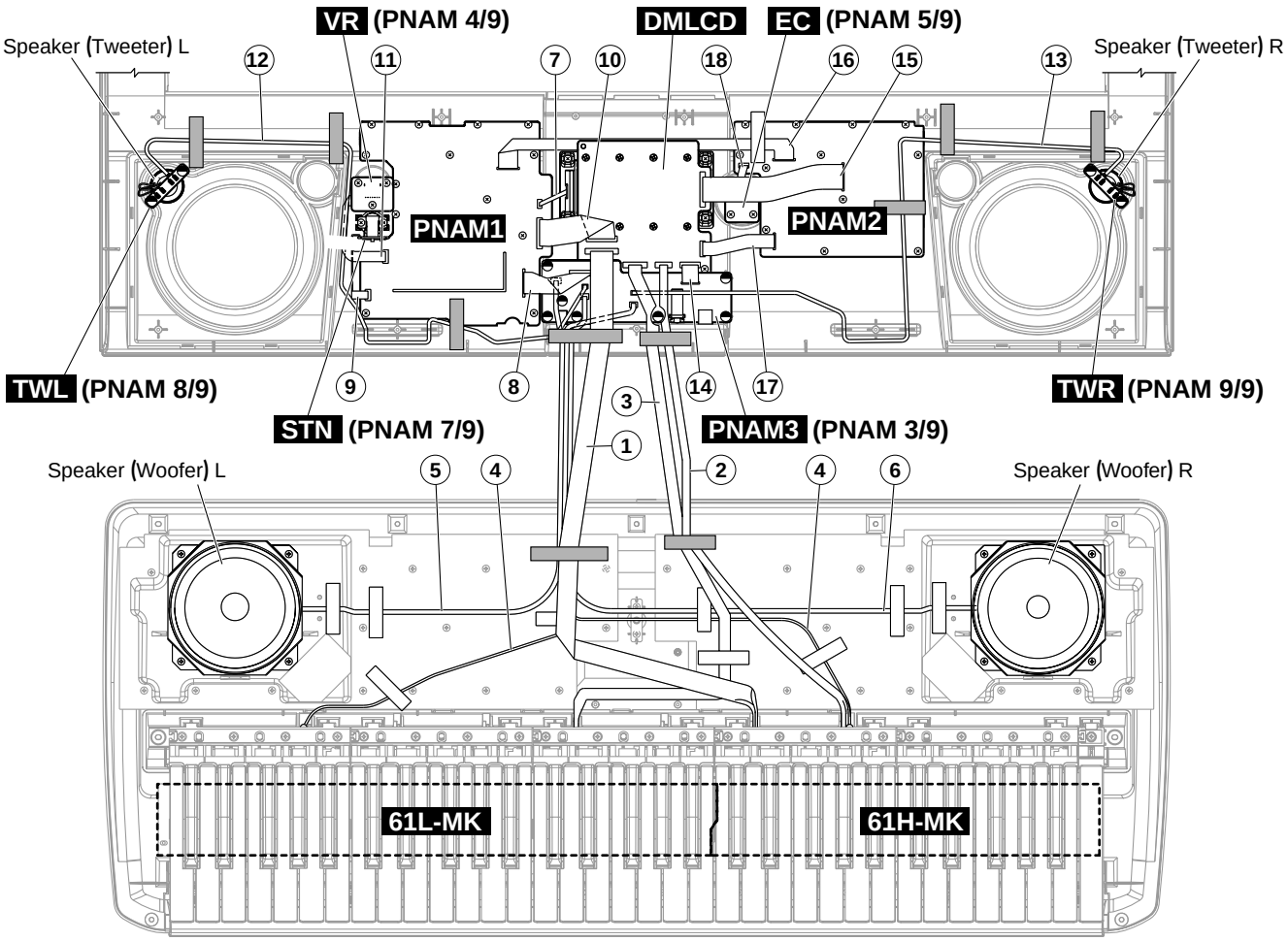

No.	Location	Part No.	Connector Assembly	Destination							Remarks
①	C50	WC601000	MK1	61H-MK-CN1	*1	*4	DMLCD-CN401	*1	*4	12P	
②	C40	WC601100	MK2	61H-MK-CN2	*1	*4	DMLCD-CN405	*1	*4	5P	
③	C30	WC601200	MK3	61L-MK-CN5	*1	*4	DMLCD-CN402	*1	*4	7P	
④	C130	--	BAT	Battery	*3	*5	PNAM3-CN101	*1	*6	3P	(V873560)
⑤	C220	--	SP-L	Speaker-L (Wo)	*3	*7	PNAM3-CN301	*1	*8	2P	(V873540)
⑥	C230	--	SP-R	Speaker-R (Wo)	*3	*9	PNAM3-CN302	*1	*6	2P	(V873550)
⑦	L70	--	BL	Back light assembly	*3	*10	PNAM1-CN106	*1	*4	2P	L=70 (WC60260)
⑧	WA102	--	AM	PNAM1-CN103	*2	*4	PNAM3-CN102	*1	*4	11P	L=130 (WC60180)
⑨	WA105	--	STAN	STN-CN105	*2	*4	PNAM1-CN104	*1	*4	4P	L=130 (WC60170)
⑩	WA107	--	AM	PNAM1-CN107	*2	*4	DMLCD-CN101	*1	*4	11P	L=130 (WC60180)
⑪	WA202	--	VOL	VR-CN202	*2	*4	PNAM1-CN201	*1	*4	5P	L=160 (WC60160)
⑫	WA303	--	TW6	PNAM3-CN303	*2	*4	TWL	*3	*10	2P	L=760 (WC60270)
⑬	WA304	--	TW6	PNAM3-CN304	*2	*4	TWR	*3	*10	2P	L=760 (WC60270)
⑭	WA401	--	JACK	PNAM3-CN401	*2	*4	DMLCD-CN601	*1	*4	6P	L=70 (WC60190)
⑮	WA501	--	PN1	PNAM2-CN501	*2	*4	DMLCD-CN701	*1	*4	16P	L=200 (WC60230)
⑯	WA502	--	PN3	PNAM2-CN502	*2	*4	PNAM1-CN505	*2	*4	11P	L=350 (WC60250)
⑰	WA503	--	PN2	PNAM2-CN503	*2	*4	DMLCD-CN603	*1	*4	8P	L=110 (WC60240)
⑱	WA504	--	ENC	EC-CN601	*2	*4	PNAM2-CN504	*1	*4	3P	L=70 (WC60210)

* The parts with — in Part No. are not available as spare parts.
*** 1 : Installation**
*** 2 : Dip soldering**
*** 3 : Manual soldering**
* 4 : Edge mark is adjusted to Pin 1 mark (△mark).
* 5 : Red wire is connected to (+) terminal. Black wire is connected to (-) terminal.
* 6 : Red wire is adjusted to Pin 1 mark (△mark).
* 7 : Brown wire is connected to (+) terminal.
* 8 : Brown wire is adjusted to Pin 1 mark (△mark).
* 9 : Red wire is connected to (+) terminal.
* 10 : Edge mark is adjusted to + mark (+ mark).

Caution: Be sure to attach the removed filament tape just as it was before removal.

■ BLOCK DIAGRAM

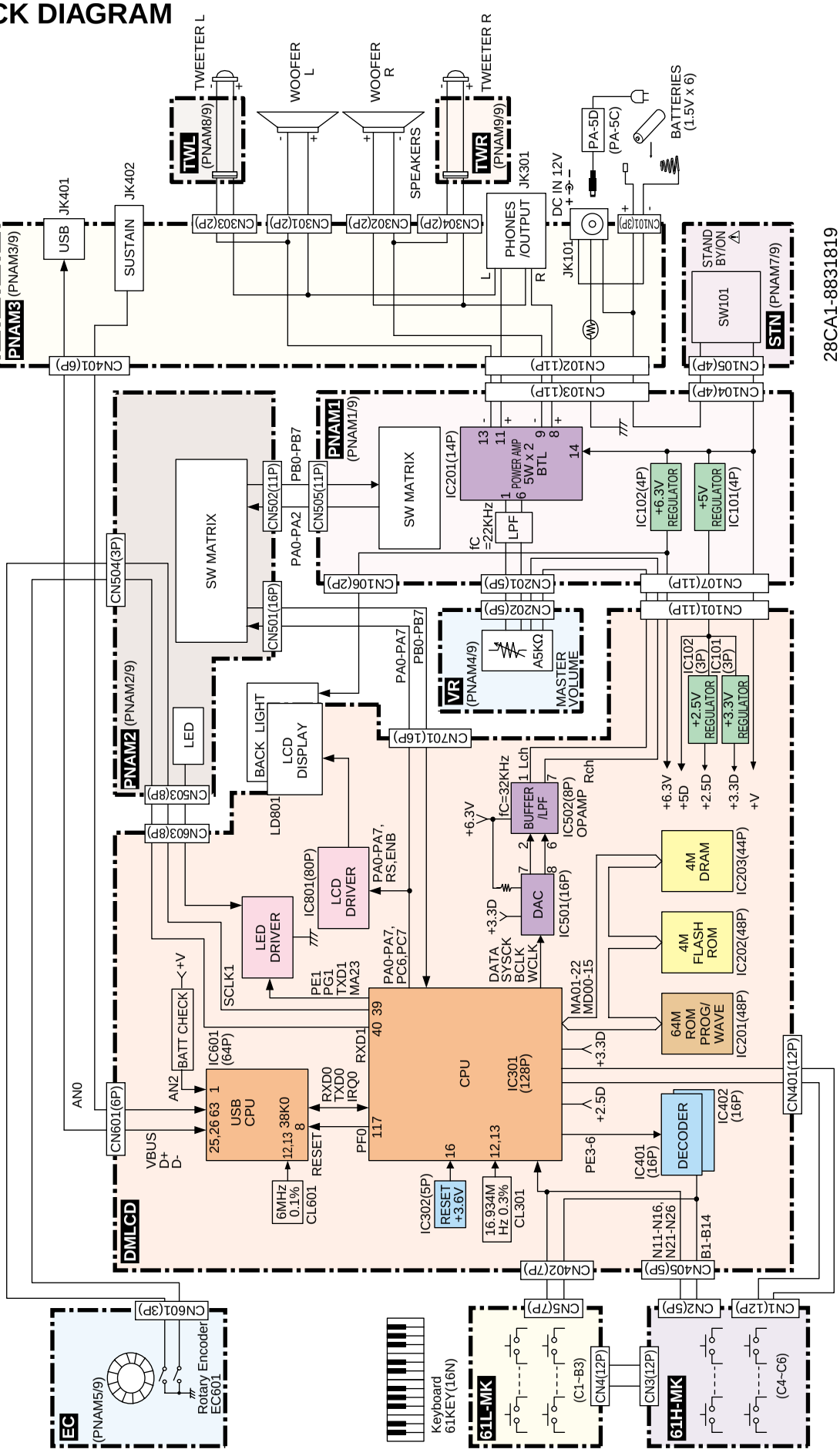

■ DISASSEMBLY PROCEDURE

1. Lower Case Assembly (Time required: About 2 minutes)

1-1. Remove the battery cover assembly. (Fig. 1)

1-2. Remove the nine (9) screws marked [360] and the three (3) screws marked [370]. The lower case assembly can then be removed. (Fig. 1)

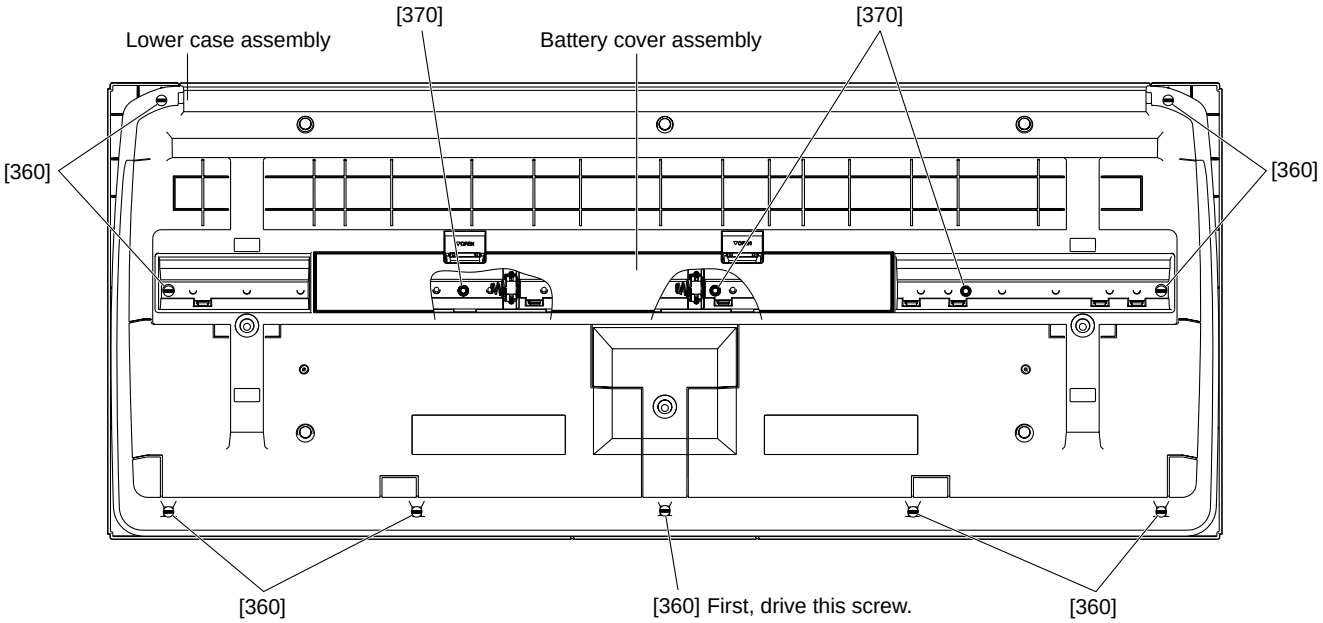

[360]: Bind Head Tapping Screw-B 3.0 x 12 MFZN2Y (VE683000)
[370]: Bind Head Tapping Screw-B 3.0 x 30 MFZN2Y (V7213700)

(Fig. 1)

2. Spring Terminal

A. Spring Terminal (+) and (-)

2-1. Remove the Lower case assembly. (See procedure 1)

2-2. Remove the battery harness soldered to the spring terminal (+) or (-).(Fig. 2)

2-3. Remove the hooks (two at each place) and pull out the spring terminal (+) or (-). (Fig. 3-1) (Fig. 3-2)

B. Spring Terminal

2-1. Remove the Lower case assembly. (See procedure 1)

2-2. Remove spring terminal hooks (two at each place) and pull out the spring terminal. (Fig. 3-2)

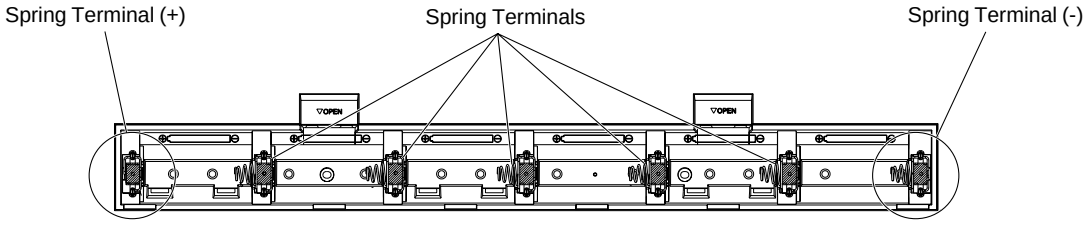

(Fig. 2)

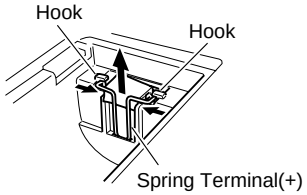

(Fig. 3-1)

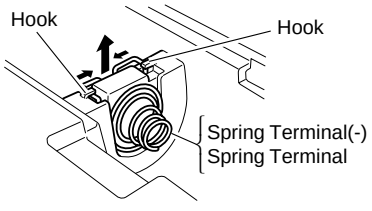

(Fig. 3-2)

3. TWL Circuit Board, TWR Circuit Board, Speaker (Tweeter)

(Time required: About 2 minutes for each)

3-1. Remove the lower case assembly. (See procedure 1.)

3-2. Remove two (2) screws [210A], The TWL or TWR circuit board can then be removed. (Fig. 4)

3-3. Remove the speaker (tweeter). (Photo 1)

* The TWR circuit board and speaker (tweeter) can be removed in the same way.

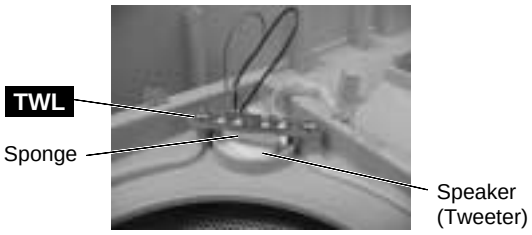

(Photo. 1)

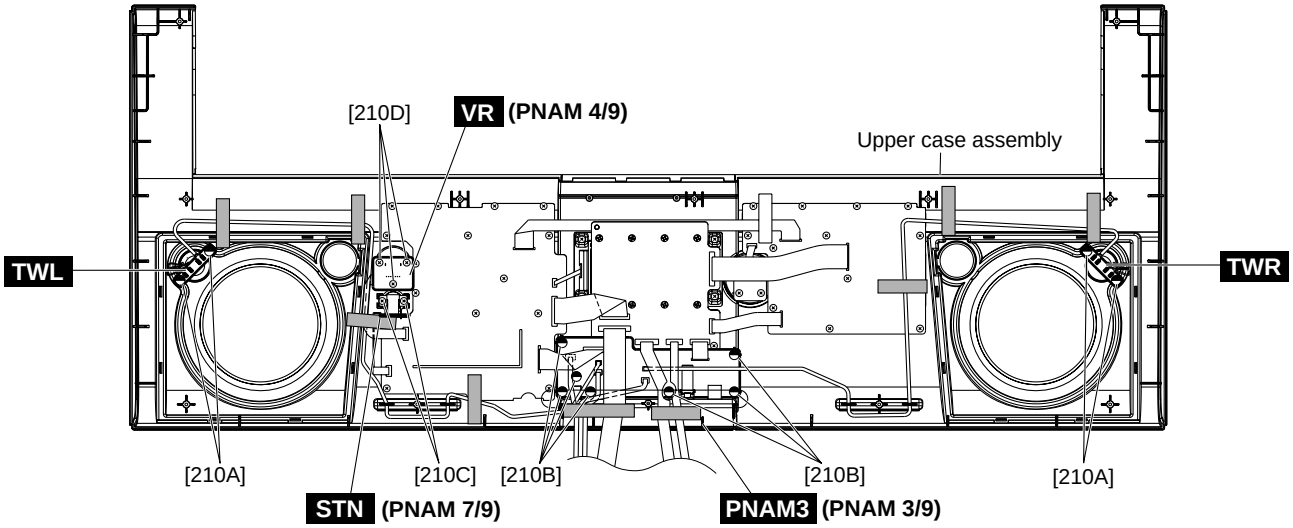

[210]: Bind Head Tapping Screw-B 3.0 x 8 MFZN2Y (EP600250)

(Fig. 4)

4. PNAM3 (PNAM 3/9) Circuit Board (Time required: About 3 minutes)

4-1. Remove the lower case assembly. (See procedure 1.)

4-2. Remove seven (7) screws [210B], then remove the PNAM3 (PNAM 3/9) circuit board. (Fig. 4)

5. STN (PNAM 7/9) Circuit Board (Time required: About 3 minutes)

5-1. Remove the lower case assembly. (See procedure 1.)

5-2. Remove two (2) screws [210C], then remove the STN (PNAM 7/9) circuit board. (Fig. 4)

6. VR (PNAM 4/9) Circuit Board (Time required: About 3 minutes)

6-1. Remove the lower case assembly. (See procedure 1.)

6-2. Remove the master volume from the control panel. (Fig. 5)

6-3. Remove three (3) screws [210D], then remove the VR (PNAM 4/9) circuit board. (Fig. 4)

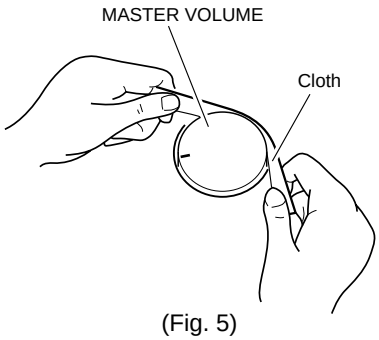

(Fig. 5)

7. LCD Unit, DMLCD Circuit Board (Time required: About 6 minutes)

7-1. Remove the lower case assembly. (See procedure 1.)

7-2. Remove the PNAM3 (PNAM 3/9) circuit board. (See procedure 4.)

7-3. Remove six (6) screws [210E], then remove the LCD unit. (Fig. 6)

7-4. Remove eight (8) screws [L50], then remove the DMLCD circuit board form the LCD unit. (Fig. 6-1)

* When installing the DMLCD circuit board, tighten the screws from No. 1 through No. 8 in order as shown in Fig. 6-1.

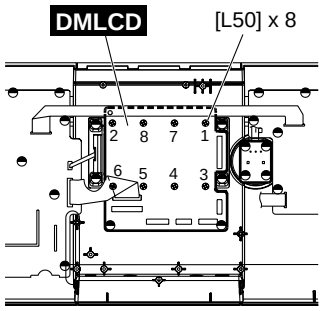

[L50]: Bind Head Tapping Screw-P 3.0 x 12 MFZN2Y (VE683000)

(Fig. 6-1)

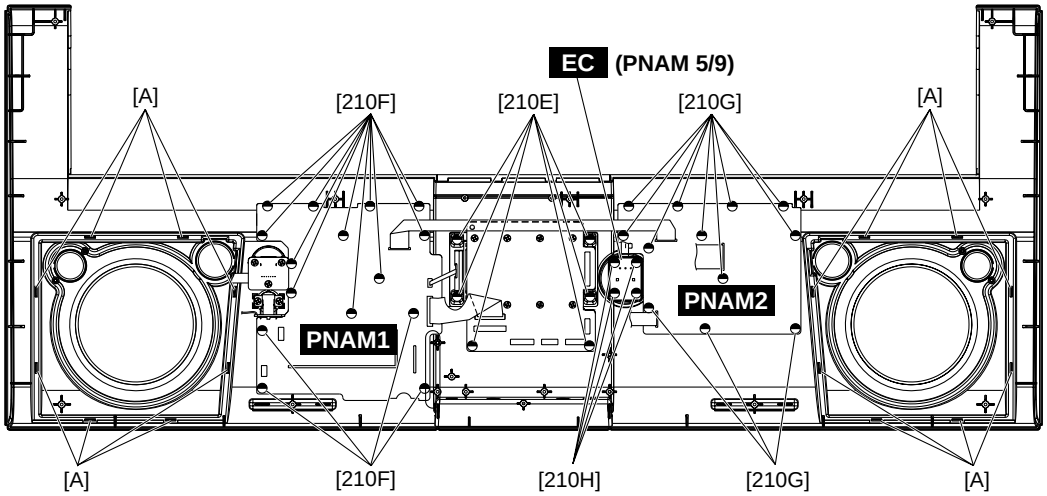

[210]: Bind Head Tapping Screw-B 3.0 x 8 MFZN2Y (EP600250)

(Fig. 6)

8. PNAM1 Circuit Board, PNAM2 Circuit board (Time required: About 6 minutes for each)

8-1. Remove the lower case assembly. (See procedure 1.)

8-2. Remove the STN (PNAM 7/9) circuit board. (See procedure 5.)

8-3. Remove the VR (PNAM 4/9) circuit board. (See procedure 6.)

8-4. PNAM1 Circuit Board

8-4-1. Remove fifteen (15) screws [210F], then remove the PNAM1 circuit board. (Fig. 6)

8-5. PNAM2 Circuit Board

8-5-1. Remove twelve (12) screws [210G], then remove the PNAM2 circuit boards. (Fig. 6)

* The CN505 connector on the PNAM1 circuit board and the CN502 connector on the PNAM2 circuit board, which is connected to the CN505 connector cannot be removed.

9. EC (PNAM 5/9) Circuit Board

(Time required: About 3 minutes)

9-1. Remove the lower case assembly. (See procedure 1.)

9-2. Remove the encoder knob from the control panel. (Fig. 7)

9-3. Remove four (4) screws [210H], then remove the EC (PNAM 5/9) circuit board. (Fig. 6)

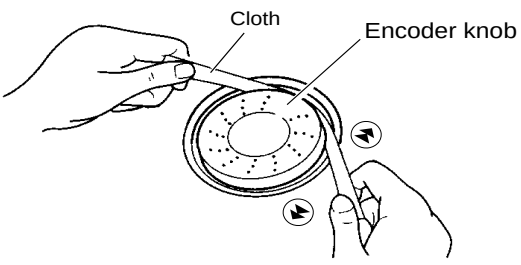

(Fig. 7)

10. Speaker (Woofer) (Time required: About 3 minutes)

10-1. Remove the lower case assembly. (See procedure 1.)

10-2. Remove four (4) screws [200A], then remove the speaker (woofer). (Fig. 8)

* Left and right speakers (woofers) can be removed in the same way.

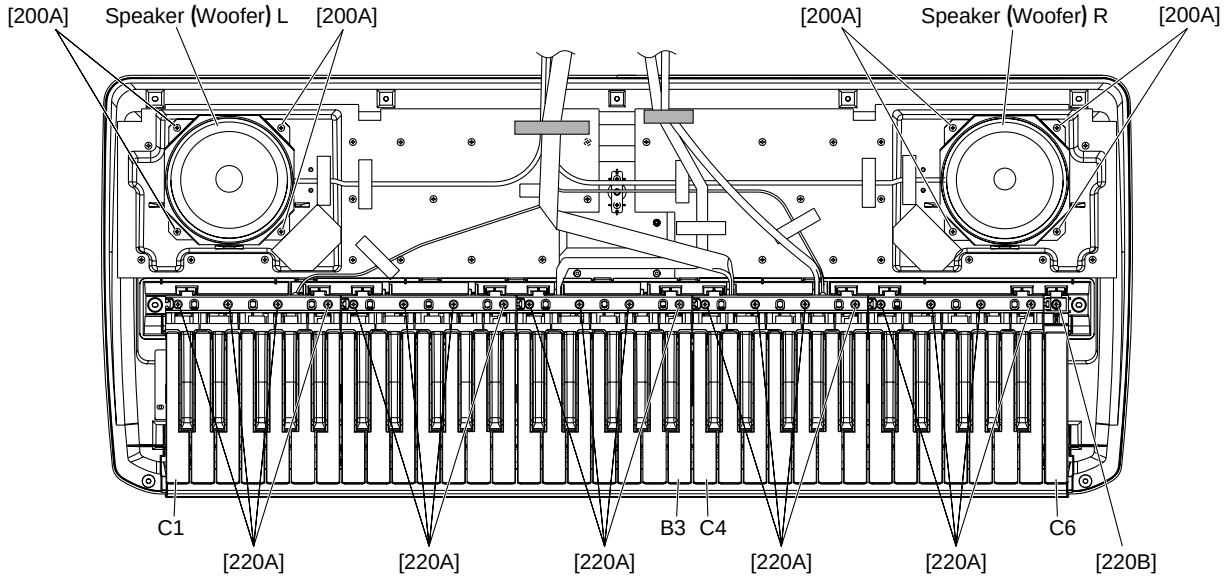

[200]: Bind Head Tapping Screw-B 4.0 x 10 MFZN2Y (EP640130)
[220]: Bind Head Tapping Screw-P 3.0 x 20 MFZN2 (VT069800)

(Fig. 8)

11. White and Black Keys

11-1. Remove the lower case assembly. (See procedure 1.)

11-2. Remove four (4) screws [220A] fixing the white/black keys for each octave (C through B), then remove the white/black keys for one (1) octave. (Fig. 8)
At that time, push hooks on the black keys to lift the rear part, then pull and slide the keys toward you to remove it. (Photo 2)

11-3. For the C6 key, remove screw [220B], push hook on the white key to lift the rear part, and then pull and slide the key toward you to remove it. (Fig. 8)

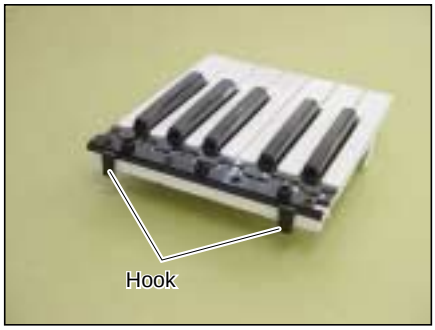

(Photo. 2)

12. 61L-MK Circuit Board, 61H-MK Circuit Board (Time required: About 5 minutes for each)

12-1. Remove the lower case assembly. (See procedure 1.)

12-2. Remove the C1-B3 white/black keys. (See procedure 11.)
Remove four (4) screws [200B] and eight (8) screws [210A], then remove the MK-61L circuit board. (Fig. 9)

12-3. Remove the C4-C6 white/black keys. (See procedure 11.)
Remove three (3) screws [200C] and five (5) screws [210B], then remove the MK-61H circuit board. (Fig. 9)

* When installing the 61L-MK circuit board, tighten the screws from No. 1 through No. 12 in order as shown in Fig. 9-1.

* When installing the 61H-MK circuit board, tighten the screws from No. 1 through No. 8 in order as shown in Fig. 9-1.

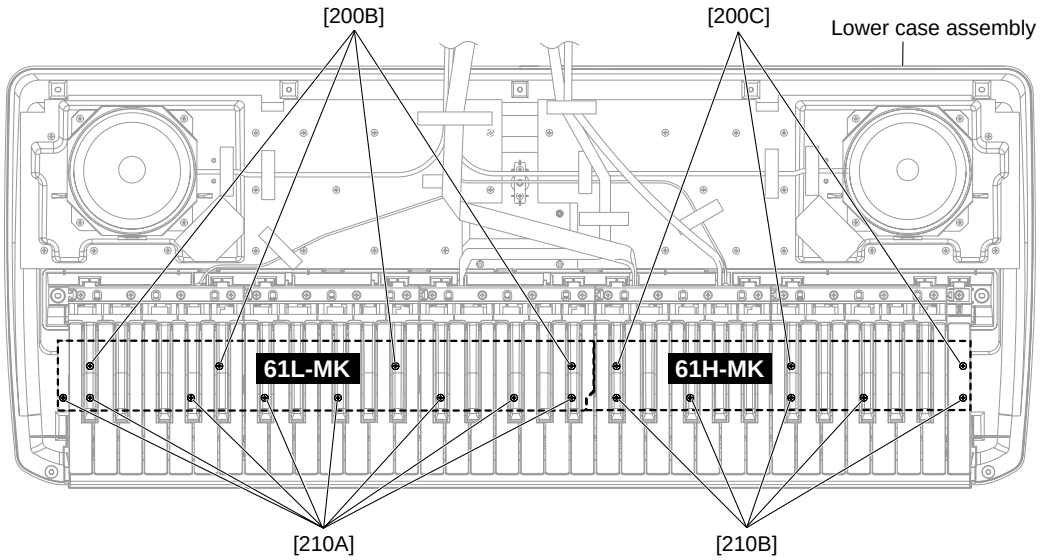

[200]: Bind Head Tapping Screw-B 3.0 x 8 MFZN2Y (EP600250)
[210]: Bind Head Tapping Screw-P 3.0 x 12 MFZNBL (VZ313100)

(Fig. 9)

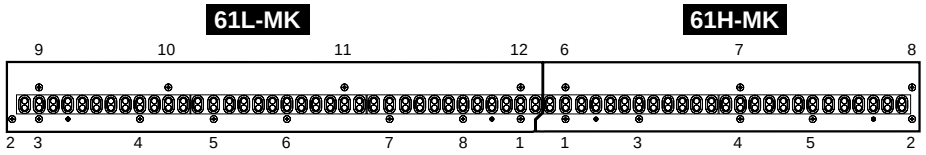

(Fig. 9-1)

13. Rubber Contact

13-1. Remove the lower case assembly. (See procedure 1.)

13-2. Remove the keyboard assembly corresponding to the rubber contact to remove. (See procedure 11.)

13-3. Remove the rubber contact. (Photo 3.)



(Photo. 3)

■ LSI PIN DESCRIPTION

● **YMW767-V** (X3271A00) **CPU**

DMLCD: IC301

PIN NO.	NAME	I/O	FUNCTION	PIN NO.	NAME	I/O	FUNCTION
1	V_{SS}		Ground	65	V_{SS}		Ground
2	TESTN (SCMD)	Ish	TEST Pin	66	IOV_{DD}		Power supply
3	PLLBPN	Ish	PLL bypass	67	LBN/LWRN/PF6	O	Low byte enable
4	$PLLV_{DD}$		Power supply	68	UBN/UWRN/PF7	O	Upper byte enable
5	CIN		Condenser connect	69	RDN/PF4	O	Read enable
6	$PLLV_{SS}$		Ground	70	MD00	I/O+	
7	TRSTN	I		71	MD08	I/O+	
8	TMS	I		72	MD01	I/O+	
9	TCK	I	JTAG	73	MD09	I/O+	Memory data bus
10	TDI	I		74	MD02	I/O+	
11	TDO	O		75	MD10	I/O+	
12	XI	I	Crystal oscillator	76	MD03	I/O+	
13	XO	O		77	V_{SS}		Ground
14	V_{SS}		Ground	78	MD11	I/O+	
15	V_{DD}		Power supply	79	MD04	I/O+	
16	ICN	Ish	Initial clear	80	MD12	I/O+	
17	ECSN	Ish	Chip select	81	MD05	I/O+	
18	EWRN/PD5	Ish	Write enable	82	MD13	I/O+	Memory data bus
19	ERDN/PD4	Ish	Read enable	83	MD06	I/O+	
20	EA3/PD3	I		84	MD14	I/O+	
21	EA2/PD2	I	Address bus	85	MD07	I/O+	
22	EA1/PD1	I		86	MD15	I/O+	
23	EA0/PD0	I		87	WRN/PF5	O	
24	IOV_{DD}		Power supply	88	V_{SS}		Ground
25	ED0/PC0	I/O		89	V_{DD}		Power supply
26	ED1/PC1	I/O		90	IOV_{DD}		Power supply
27	ED2/PC2	I/O		91	MA17	O	
28	ED3/PC3	I/O	Data bus /	92	MA16	O	
29	ED4/PC4	I/O		93	MA15	O	
30	ED5/PC5	I/O		94	MA14	O	
31	ED6/PC6	I/O		95	MA13	O	
32	ED7/PC7	I/O		96	MA12	O	
33	V_{SS}		Ground	97	MA11	O	Memory address bus
34	IRQ0N/PH0	Ish	Interrupt request	98	MA10	O	
35	TxD0	O	Serial port 0	99	MA09	O	
36	RxD0	I		100	MA08	O	
37	TxD1/PG2	O	Serial port 1 /	101	MA07	O	
38	RxD1/PH1	I		102	MA06	O	
39	SCLK1/PH2	I	EXT Clock /	103	MA05	O	
40	SDO	O	Serial data	104	V_{SS}		Ground
41	SDI/PH3	I	Serial data /	105	MA04	O	
42	BCLK	O	Bit clock	106	MA03	O	Memory address bus
43	WCLK/SYO	O	Word clock	107	MA02	O	
44	SYSCLK/PG3	O	System clock	108	MA01	O	
45	V_{SS}		Ground	109	CS0N/PG0	O	Chip select /
46	V_{DD}		Power supply	110	MA18	O	Memory address bus
47	IOV_{DD}			111	MA19	O	
48	PA0	I/O		112	MA21/PF1	O	Memory address bus
49	PA1	I/O		113	MA22/PF2	O	
50	PA2	I/O		114	MA20	O	Memory address bus
51	PA3	I/O	Parallel port A	115	MA23/PF3	O	Memory address bus
52	PA4	I/O		116	CSIN/PG1	O	Chip select /
53	PA5	I/O		117	MA00/PF0	O	Memory address bus
54	PA6	I/O		118	V_{SS}		Ground
55	PA7	I/O		119	V_{DD}		Power supply
56	V_{SS}		Ground	120	IOV_{DD}		Power supply
57	PB0	I/O		121	CS2N/PE0	O	Chip select /
58	PB1	I/O		122	CS3N/PE1	O	Chip select /
59	PB2	I/O		123	CS4N/CASN/PE2	O	Chip select /
60	PB3	I/O	Parallel port B	124	CS5N/PE3	O	Chip select /
61	PB4	I/O		125	CS50RDN/PE4	O	Chip select /
62	PB5	I/O		126	CS51WRN/PE5	O	Chip select /
63	PB6	I/O		127	CS52WRN/PE6	O	Chip select /
64	PB7/SYI	I/O	Parallel port B /	128	CS53WRN/RASN/PE7	O	Chip select /

● **ML9040A-B01GA** (XZ987A00) **LCD DRIVER**

DMLCD: IC801

PIN NO.	NAME	I/O	FUNCTION	PIN NO.	NAME	I/O	FUNCTION
1	S22	O		41	DB2	I/O	
2	S21	O		42	DB3	I/O	
3	S20	O		43	DB4	I/O	
4	S19	O		44	DB5	I/O	Data interface
5	S18	O		45	DB6	I/O	
6	S17	O		46	DB7	I/O	
7	S16	O		47	C1	O	
8	S15	O		48	C2	O	
9	S14	O		49	C3	O	
10	S13	O		50	C4	O	
11	S12	O		51	C5	O	
12	S11	O	Segment signal output for LCD driving	52	C6	O	
13	S10	O		53	C7	O	
14	S9	O		54	C8	O	
15	S8	O		55	C9	O	Common signal output for LCD driving
16	S7	O		56	C10	O	
17	S6	O		57	C11	O	
18	S5	O		58	C12	O	
19	S4	O		59	C13	O	
20	S3	O		60	C14	O	
21	S2	O		61	C15	O	
22	S1	O		62	C16	O	
23	Vss		Ground	63	S40	O	
24	OSC1	I	Oscillator	64	S39	O	
25	OSC2	O	Oscillator	65	S38	O	
26	V1			66	S37	O	
27	V2			67	S36	O	
28	V3		Power supply	68	S35	O	
29	V4			69	S34	O	
30	V5			70	S33	O	
31	CLK1	O	Data latch clock	71	S32	O	
32	CLK2	O	Data shift clock	72	S31	O	Segment signal output for LCD driving
33	Vdd		Power supply (+5 V)	73	S30	O	
34	M	O	Altamated signal for LCD driver outout	74	S29	O	
35	D	O	Display data interface	75	S28	O	
36	RS	I		76	S27	O	
37	R/W	I	Read/write	77	S26	O	
38	E	I	Enable	78	S25	O	
39	DB0	I/O	Data interface	79	S24	O	
40	DB1	I/O	Data interface	80	S23	O	

■ IC BLOCK DIAGRAM

● **HD74LV32AFPEL** (IS003200)
SN74LV32ANSR OR (X4176A00)
Quad 2 Input OR
DMLCD: IC204

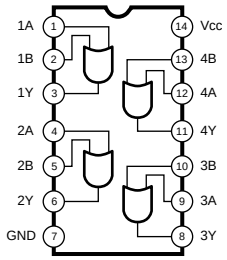

● **SN74LV138ANSR** (IS013810)
3 to 8 Demultiplexer
DMLCD: IC401,402

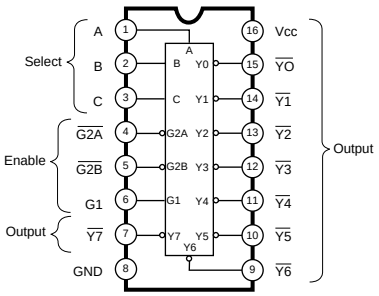

● **PCM1742KE/2K** (X3538A00)
DAC
DMLCD: IC501

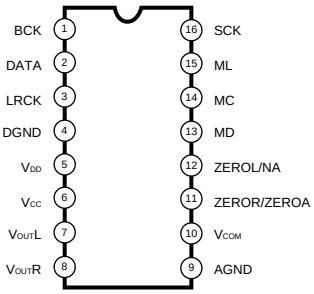

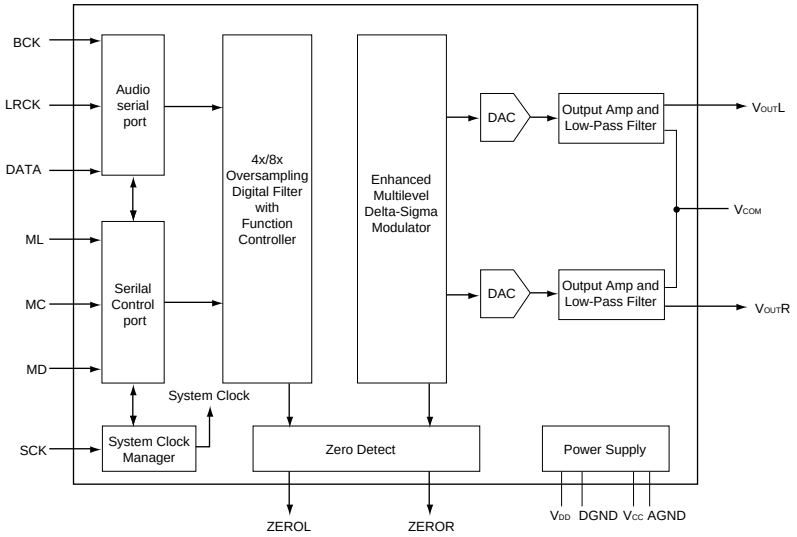

● **NJM4580E TE2** (X2331A00)
Dual Operational Amplifier
DMLCD: IC502

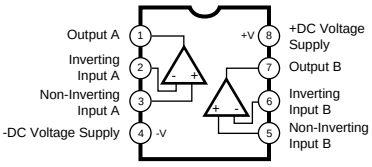

■ CIRCUIT BOARDS

DMLCD Circuit Board (X5032C0) ····· **18/19**
EC (PNAM 5/9) Circuit Board (X5033B0) ····· **18**
61H-MK Circuit Board (X2335C0) ····· **20**
61L-MK Circuit Board (X2336B0) ····· **21**
PNAM1 Circuit Board (X5033B0) ····· **16**
PNAM2 Circuit Board (X5033B0) ····· **17**
PNAM3 (PNAM 3/9) Circuit Board (X5033B0) ····· **17**
STN (PNAM 7/9) Circuit Board (X5033B0) ····· **19**
TWL (PNAM 8/9) Circuit Board (X5033B0) ····· **19**
TWR (PNAM 9/9) Circuit Board (X5033B0) ····· **19**
VR (PNAM 4/9) Circuit Board (X5033B0) ····· **18**

Note:See parts list for details of circuit board component parts.

• PNAM1 Circuit Board

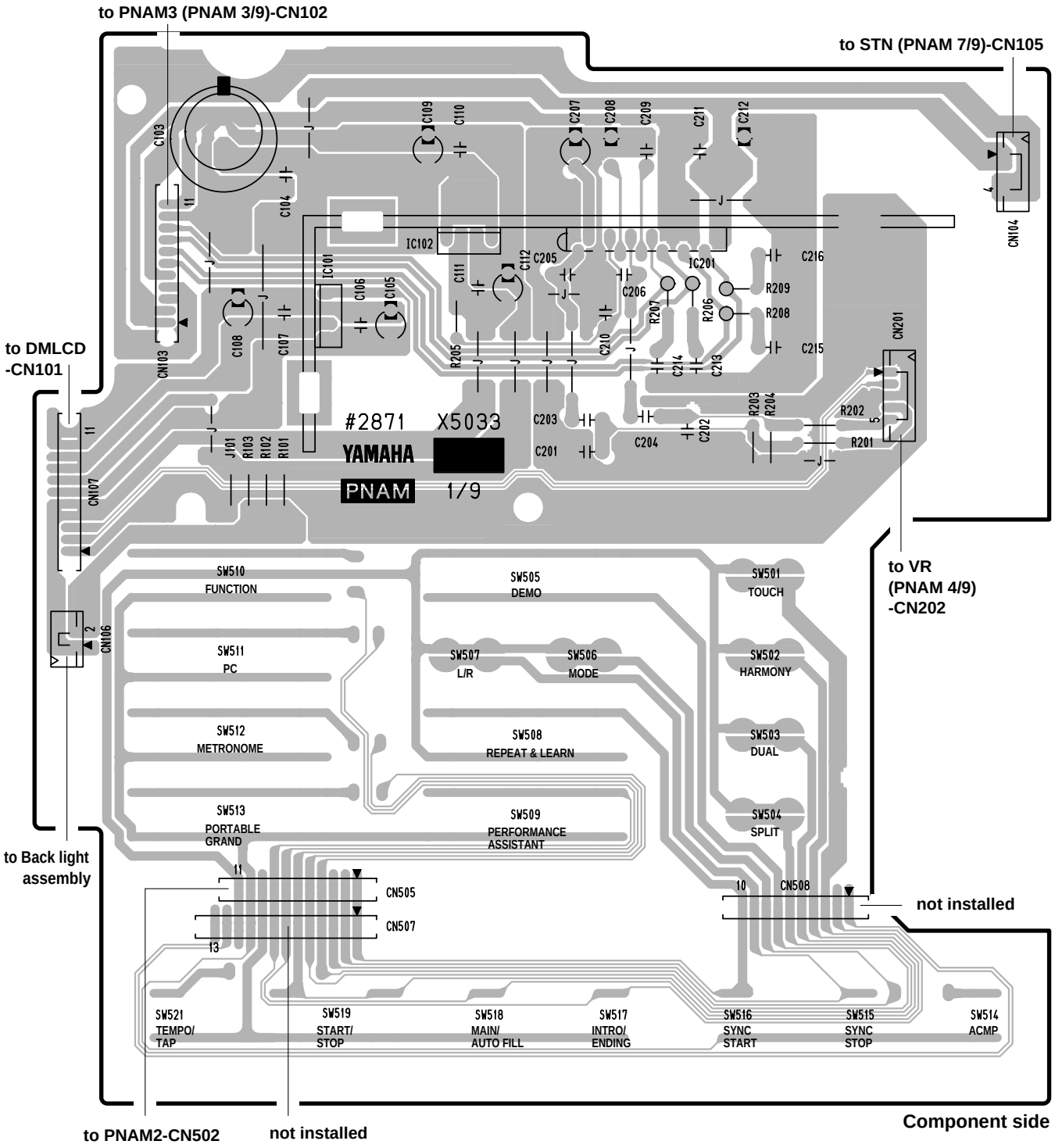

2NA-WC59830

• PNAM2 Circuit Board

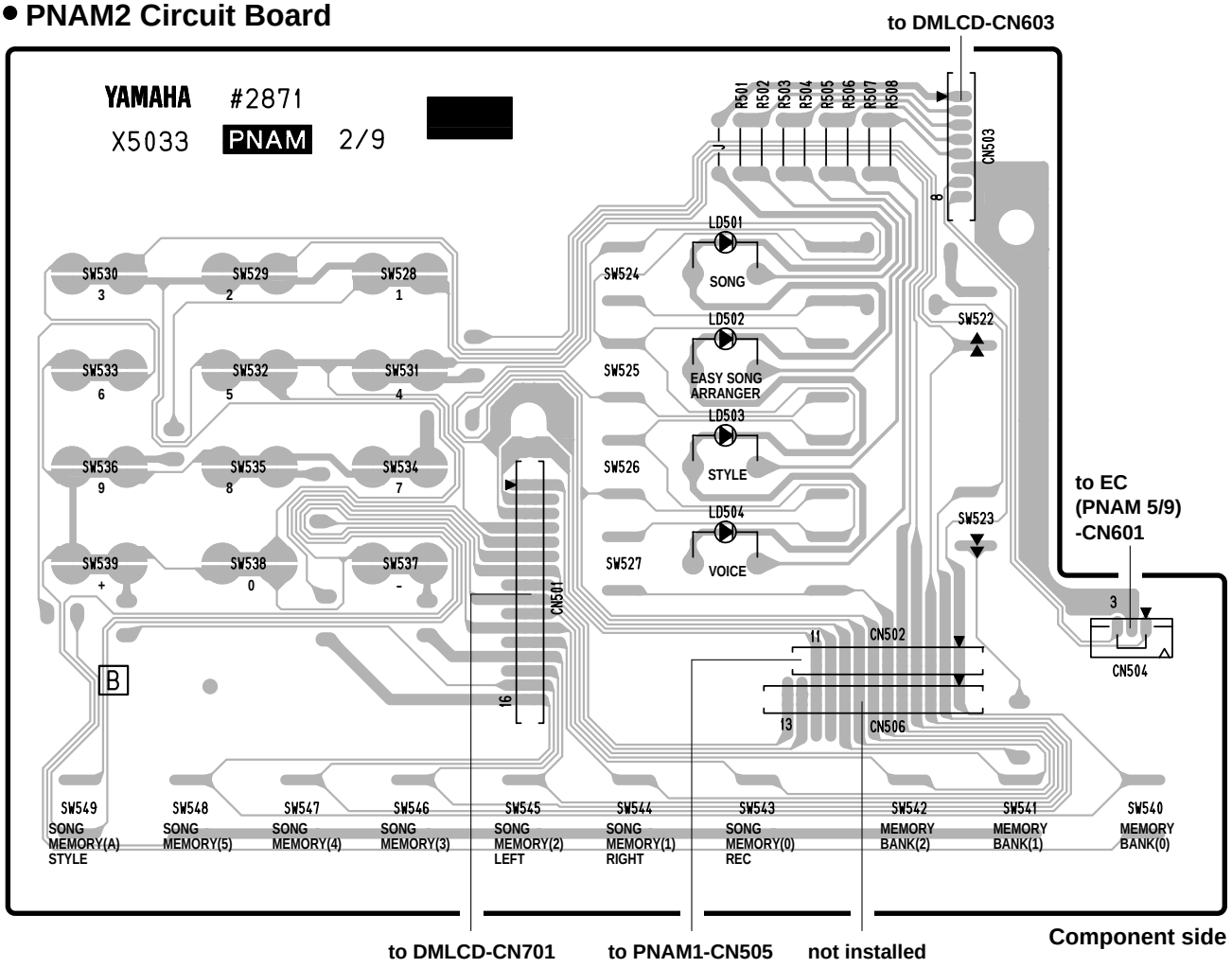

• PNAM3 (PNAM 3/9) Circuit Board

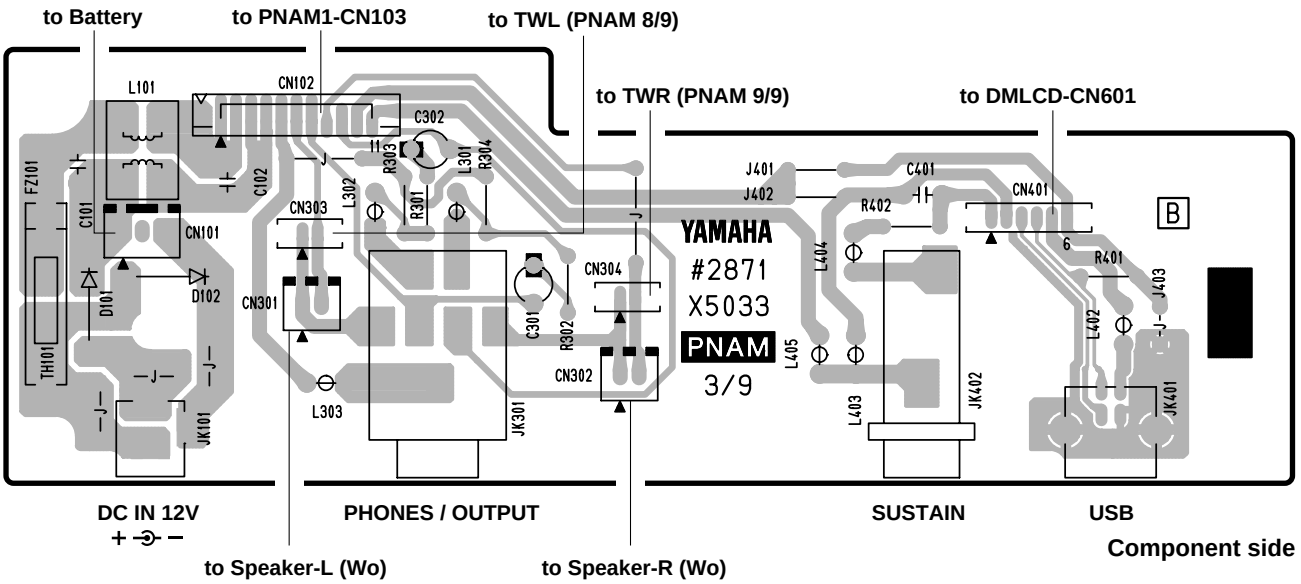

2NA-WC59830

• DMLCD Circuit Board

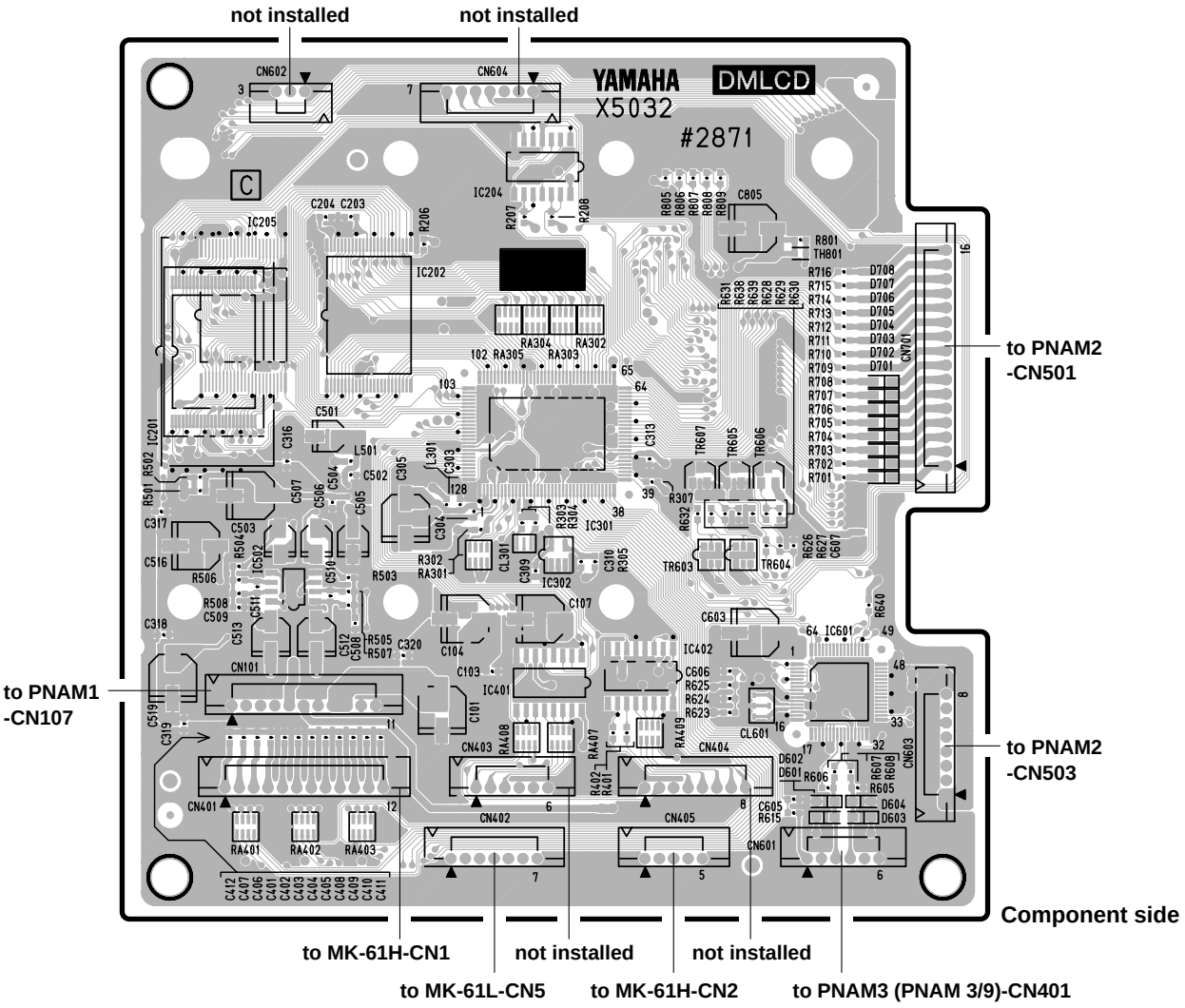

• VR (PNAM 4/9) Circuit Board

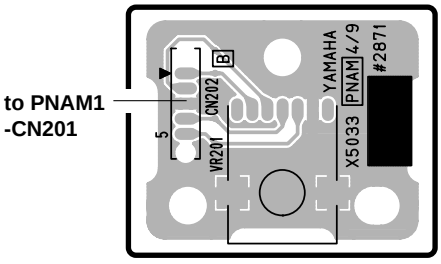

MASTER VOLUME

Component side

• EC (PNAM 5/9) Circuit Board

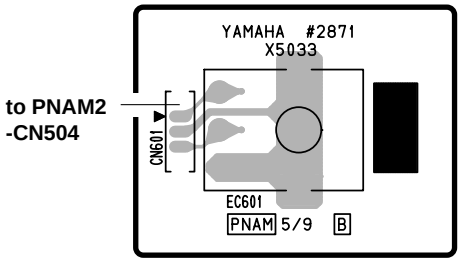

DATA Dial

Component side

DMLCD: 2NA-WC59750
VR, EC: 2NA-WC59830

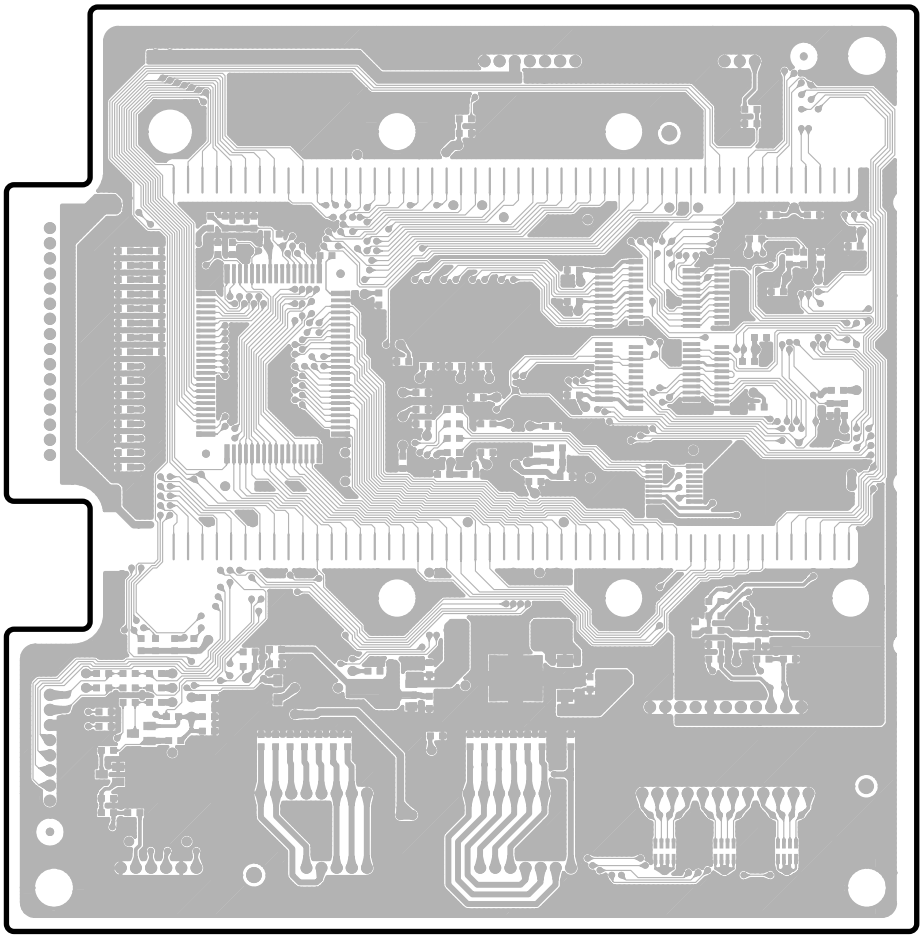

Pattern side

- **STN (PNAM 7/9) Circuit Board**

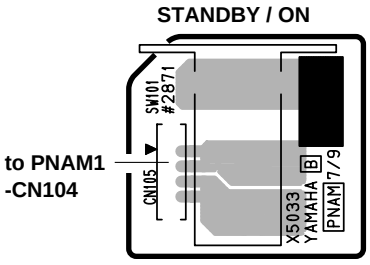

Component side

- **TWL (PNAM 8/9) Circuit Board**

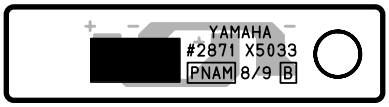

to PNAM3-CN303

Component side

- **TWR (PNAM 9/9) Circuit Board**

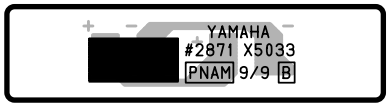

to PNAM3-CN304

Component side

STN, TWL, TWR: 2NA-WC59830

• 61H-MK Circuit Board

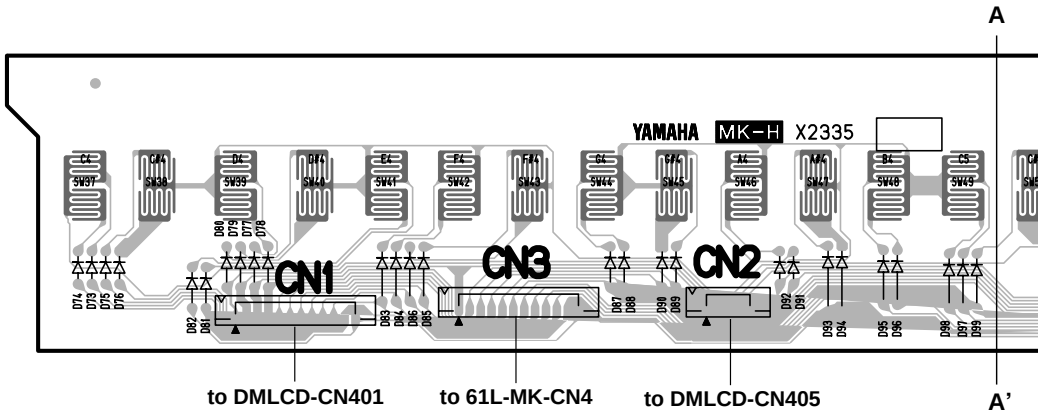

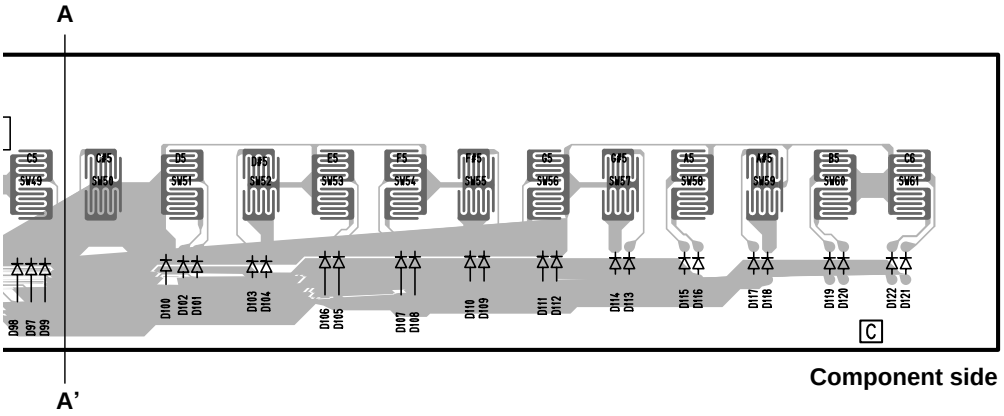

• 61L-MK Circuit Board

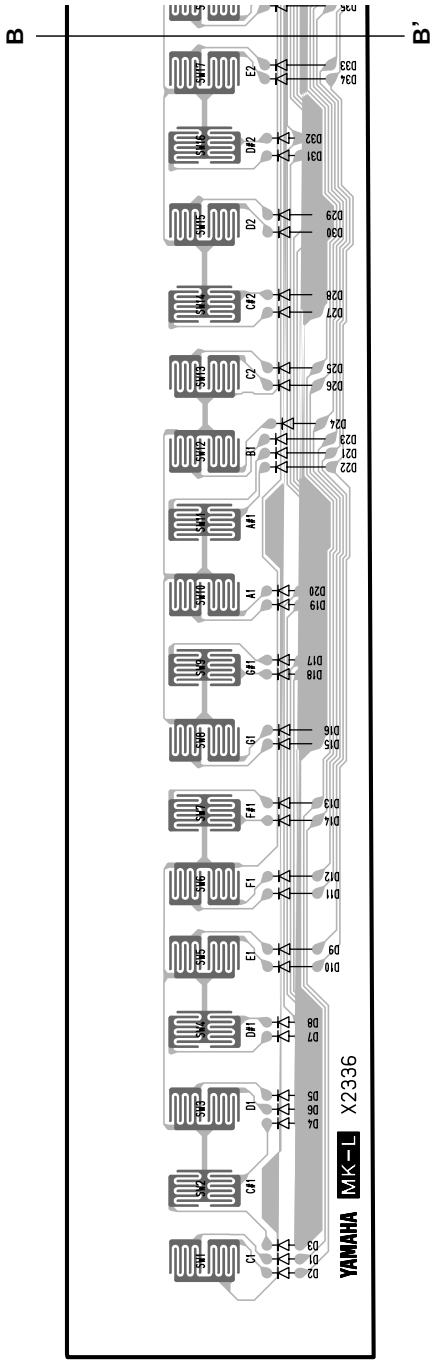

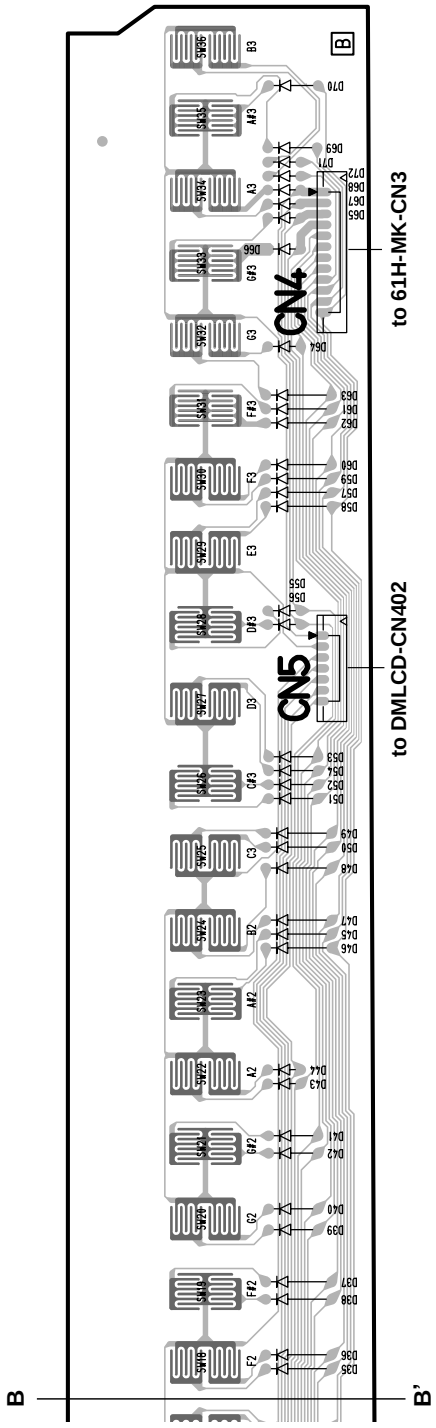

■ TEST PROGRAM

* If you execute the test No. 47, Factory Set, then preset data may be lost.

A. PREPARATION

1) PA-3C or PA-32 (AC adaptor) is used.
2) Measuring instruments : frequency counter, level meter (with JIS-C filter)
   Note : Connect a stereo plug to the [PHONES/OUTPUT] jack at 33 ohms.
3) Jigs : foot switch (FC-4 or FC-5), USB cable, PC

B. HOW TO ENTER THE TEST PROGRAM

While pressing the C2#, F2 and G2# keys, turn the [STANDBY/ON] switch on.

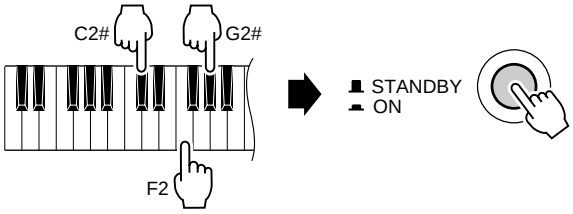

C. PROCEEDING THROUGH THE TEST PROGRAM

1) When the test program is started, TEST appears on the LCD.
2) Select the test program item to be executed by pressing the [-] or [+] button.
3) Press the [START/STOP] button to execute testing.

- When the test result is OK, press the [START/STOP] button to return to the test item name on display. Proceed to the next test by pressing the [-] or [+] button.
  When the test result is OK, a cursor (_) is added under the first character of the test item name on display.
- When the test result is NG, press the [DEMO] button or the lowest (leftmost) white key on the keyboard to return to the test item name on display and then turn off the [STANDBY/ON] switch to end the test program.

D. TEST PROGRAM LIST

TEST No.	LCD (intial)	Test Functions and Judgment Criteria
1	Version 001	ROM Version Display. The ROM (Program) version and the USB CPU version are alternatively displayed.
2	Rom Chk1 002	Checks the ROMs that are connected to the CPU. The test results appear on the LCD. Check that the LCD displays "Rom OK".
3	Ram Chk1 003	Checks all the RAMs that are connected to the CPU. The test results appear on the LCD. Check that the LCD displays "Ram OK".
6	FRomChk1 006	Flash ROMs Check that are connected to the CPU. The check results appear. Check that the "FRom OK" is displayed. It takes about 3 seconds.
11	TG1 Chk 011	Outputs the sine wave by changing the channels in sequence from C2 to G4. Check the sound by hearing that there is not noise or abnormal sound. After auto-scaling is finished, individual keys can be played. (If playing two or more keys simultaneously, the first pressed key has priority to make a sound.)
13	Pit Chk 013	Connect the frequency counter to the [PHONES/OUTPUT] jack. (L or R) Sets PAN to Center and produces a signal at 440.0 Hz ± 1.76 Hz Check that the correct signal is produced.
14	Output R 014	Connect the level meter (with a JIS-C filter) to the [PHONES/OUTPUT] jack. (33 ohm load) Set the [MASTER VOLUME] at maximum and check the output level (1 kHz sine wave, PAN=R). PHONES L : less than -60.0 dBm PHONES R : -9.5 dBm ± 2 dB
15	Output L 015	Connect the level meter (with a JIS-C filter) to the [PHONES/OUTPUT] jack. (33 ohm load) Set the [MASTER VOLUME] at maximum and check the output level (1 kHz sine wave, PAN=L). PHONES L : -9.5 dBm ± 2 dB PHONES R : less than -60.0 dBm

TEST No.	LCD (intial)	Test Functions and Judgment Criteria
19	Noise 019	Connect the level meter (with a JIS-C filter) to the [PHONES/OUTPUT] jack. (33 ohm load) Set the [MASTER VOLUME] at maximum. Check D/A converter noise. PHONES L/R: Less than -76.0 dBm
20	SW Chk 020	Check the switches on the panel. Press the switches on the LCD as instructed. A pre-assigned note is output when the switch is pressed. (See "table 1".) As the check result appears on the LCD when all the switches are pressed as instructed. Check that "SW OK" is displayed. • A encoder is clock wise set to UP and is counter clock wise set to DOWN. • To stop this check before reaching its end, press the lowest (leftmost) white key on the keyboard to return to the test item name on display.
21	A.LedChk 021	Check that the all LEDs on the panel are on.
28	LCD On 028	Check that all LCD dots are on.
29	LCD Off 029	Check that all LCD dots are off.
31	PD1 Chk 031	Connect the foot switch (FC-4 or FC-5) to the [FOOT SWITCH] jack. Check that the C3 note is output when the [START/STOP] button is pressed while stepping the pedal and the C4 note is output when releasing the pedal. The sound stops when stepping the pedal again. Check that the LCD displays "PD1 OK".
37	USB Chk 037	USB Check. Connect a PC installed with drivers to the main unit with a USB cable, and execute the test. Produce a C4 sound, and check that the LCD displays "USB OK".
40	Battery 040	Check the battery. Removing the AC adapter sets to the Battery Check mode. (In advance, install the batteries.) The A/D value of the battery is detec ted and displayed with hexadecimal number on the LCD. Bat:xx (83-A0)
41	Rom Chk2 041	Checks the ROMs that are connected to the CPU. The test results appear on the LCD. Check that the LCD displays "Rom OK". It takes about 10 seconds.
42	Ram Chk2 042	Checks the RAMs that are connected to the CPU. The test results appear on the LCD. Check that the LCD displays "Ram OK".
45	FRomChk2 045	Check for all addresses of Flash ROM. The check results appear on the LCD. Check that the "FRom OK" is displayed. It takes about 33 seconds.
47	Factory 047	All Backup domains are initialized and it changes into a factory-shipments state.
48	TestExit 048	Exit from the test program after executing this test.

● TABLE 1

No.	SW Name	Display	Note No.
1	DIAL UP	Dial UP	C2
2	DIAL DOWN	Dial DW	C#2
3	TOUCH	Touch	D2
4	HARMONY	Harmony	D#2
5	DUAL	Dual	E2
6	SPLIT	Split	F2
7	DEMO	Demo	F#2
8	LESSON MODE	LessonMd	G2
9	LESSON L/R	LessonLR	G#2
10	REP & LEARN	Rep & Lean	A2
11	P.A.T.	P.A.T.	A#2
12	FUNCTION	Function	B2
13	PC	PC	C3
14	METRONOME	Metro	C#3
15	PORTABLE GRAND	Piano	D3
16	CATEGORY +	Catego +	D#3
17	CATEGORY –	Catego –	E3
18	SONG	Song	F3
19	EASY SONG ARRANGE	E.S.A.	F#3
20	STYLE	Style	G3
21	VOICE	Voice	G#3
22	Tenkey 1	Tenkey 1	A3
23	Tenkey 2	Tenkey 2	A#3
24	Tenkey 3	Tenkey 3	B3
25	Tenkey 4	Tenkey 4	C4
26	Tenkey 5	Tenkey 5	C#4
27	Tenkey 6	Tenkey 6	D4
28	Tenkey 7	Tenkey 7	D#4
29	Tenkey 8	Tenkey 8	E4
30	Tenkey 9	Tenkey 9	F4
31	Tenkey –	Tenkey –	F#4
32	Tenkey 0	Tenkey 0	G4
33	Tenkey +	Tenkey +	G#4
34	ACMP	ACMP	A4
35	SYNC.STOP	S.Stop	A#4
36	SYNC.START	S.Start	B4
37	INTRO/ENDING	Intro	C5
38	MAIN/AUTO FILL	Main/Fil	C#5
39	START/STOP	Str/Stp	D5
40	TEMPO/TAP	Temp/TAP	D#5
41	BANK/MEMORY	Memory	E5
42	REGIST 1	Regist 1	F5
43	REGIST 2	Regist 2	F#5
44	REC	REC	G5
45	SONG 1	Song 1	G#5
46	SONG 2	Song 2	A5
47	SONG 3	Song 3	A#5
48	SONG 4	Song 4	B5
49	SONG 5	Song 5	C5
50	SONG A	Song A	C#5

■ INITIALIZATION

This function erases all backup data in the instrument s flash memory and restores the initial default settings. The following initialization procedures are provided.

Backup Clear

To clear data backed up to the internal flash memory — panel user setting, registration memory, user songs — turn the power on by pressing the **[STANDBY/ON]** switch while holding the highest white key on the keyboard. The backed up data will be erased and the default values restored.

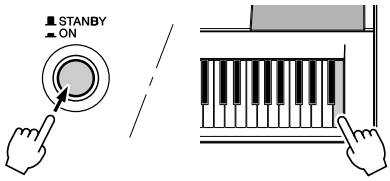

Flash Clear

To clear song data that has been transferred to the internal flash memory from a computer, turn the power on by **[STANDBY/ON]** switch while simultaneously holding the highest white key on the keyboard and the three highest black keys.

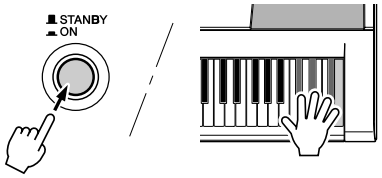

⚠ **When you execute the Flash Clear operation song data you have purchased will also be cleared. Be sure to save data you want to keep to a computer.**

■ USER DATA BACKUP

Use the Bulk Send function when backing up the user data to an external device.

* The Bulk Send function allows to back up user-recorded data and registration data.
* The data transmitted from acomputer to the main unit withe supplied software "Musicsoft Downloader" cannot be sent, using the Bulk Send funtion. If you lost data in servicing, transmit the data again from the computer to the main unit.

1 Press the [FUNCTION] button.

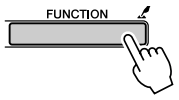



2 Use the CATEGORY [▲▲] and [▼▼] buttons to select the Bulk Send .

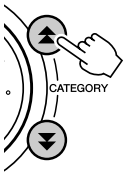



Current item

3 For ON/OFF settings use the [+] button to turn the function ON and the [-] button to turn the function OFF.

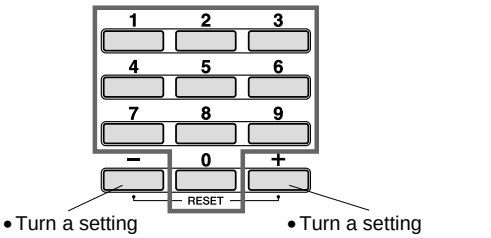

User song and registration memory data can be transmitted as bulk data to sequence software running on your computer, where it can be stored for later retrieval and use. The instrument must be connected to a computer on which the appropriate USB MIDI driver is installed. With Bulk Send showing on the instrument's display, press [+] to begin bulk data transmission. Press [-] to cancel the transmission.

■ SYSTEM BOOTING FLOW CHART

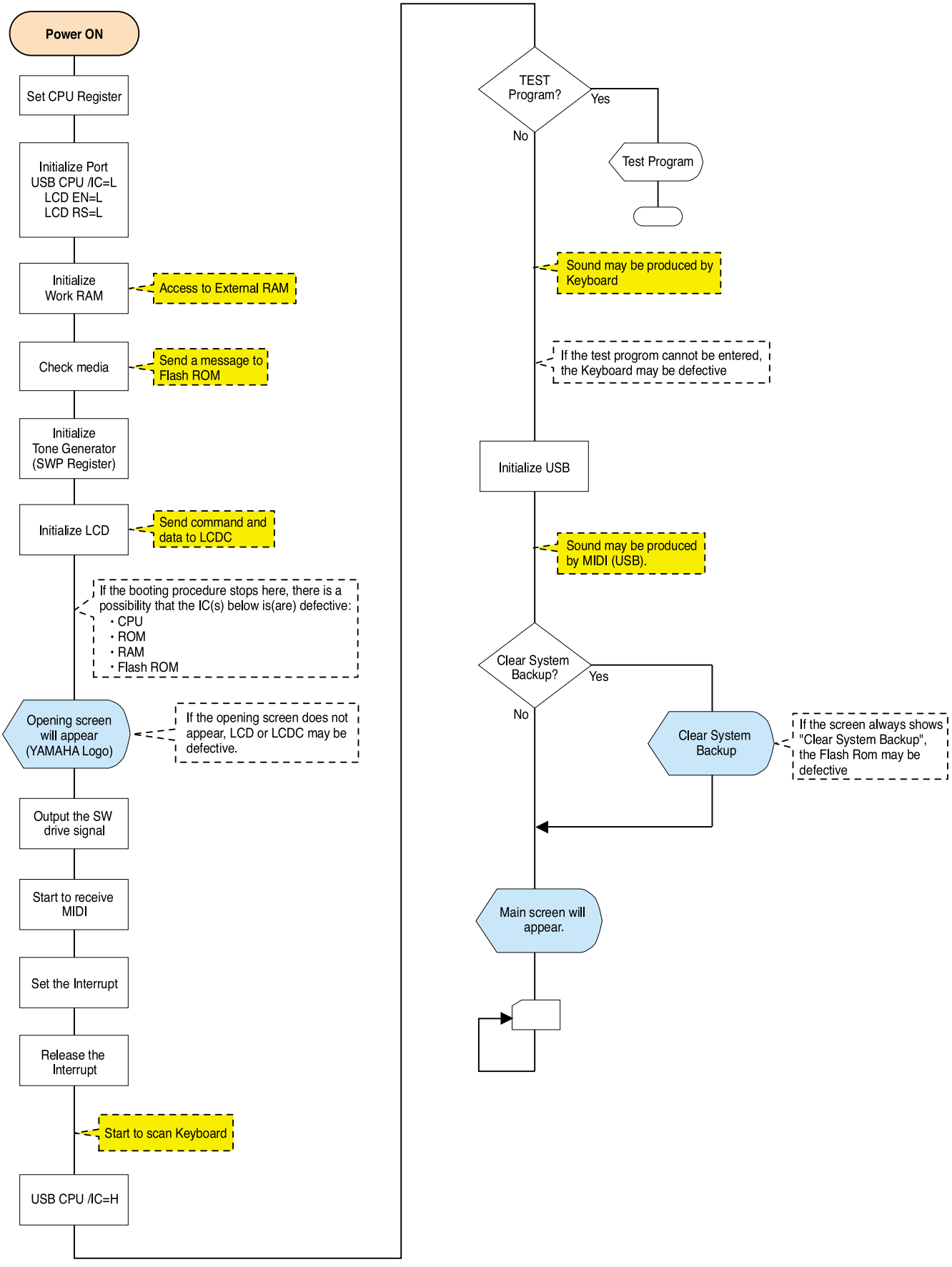

■ MIDI IMPLEMENTATION CHART

YAMAHA [Portable Grand/PORTATONE] Date:27-Jan-2004
Model PSR-295/293 MIDI Implementation Chart Version : 1.0

Function...		Transmitted	Recognized	Remarks
Basic Channel	Default	1 - 16	1 - 16	
	Changed	x	x	
Mode	Default	3	3	
	Messages	x	x	
	Altered	**********	x	
Note Number : True voice		0 - 127 **********	0 - 127 0 - 127	
Velocity	Note ON	o 9nH,v=1-127	o 9nH,v=1-127	
	Note OFF	x	x	
After Touch	Key's	x	x	
	Ch's	x	x	
Pitch Bend		o *1		
Control Change	0,32	o	o	Bank Select
	1	x *1	o	Modulation wheel
	6	o *1	o	Data Entry(MSB)
	38	o *1	o	Data Entry(LSB)
	7	o	o	Part Volume
	10	o	o	Pan
	11	x *1	o	Expression
	64	o	o	Sustain
	84	x *1	o	Portamento Cntrl
	71	x *1	o	Harmonic Content
	72	o	o	Release Time
	73	x *1	o	Attack Time
	74	x *1	o	Brightness
	91,93	o	o	Effect Depth
	96,97	x	o	RPN Inc,Dec
	100,101	o *1	o	RPN LSB,MSB
Prog Change : True #		o 0 - 127 **********	o 0 - 127	
System Exclusive		o	o	
Common	: Song Pos.	x	x	
	: Song Sel.	x	x	
	: Tune	x	x	
System Real Time	: Clock	o	o	
	: Commands	o	o	
Aux Mes- sages	:All Sound OFF	x	o(120,126,127)	
	:Reset All Cntrls	x	o(121)	
	:Local ON/OFF	x	o(122)	
	:All Notes OFF	x	o(123-125)	
	:Active Sense	o	o	
	:Reset	x	x	

Mode 1 : OMNI ON , POLY Mode 2 : OMNI ON ,MONO o : Yes
Mode 3 : OMNI OFF, POLY Mode 4 : OMNI OFF,MONO x : No

*1: Messages for these control change numbers cannot be transmitted from the instrument itself. However, they may be transmitted when playing the accompaniment, song or using the Harmony effect.

PORTATONE
PSR-293 / PSR-295
PARTS LIST

■ CONTENTS

OVERALL ASSEMBLY 2
LOWER CASE ASSEMBLY 4
KEYBOARD ASSEMBLY 6
ELECTRICAL PARTS 7

Notes: DESTINATION ABBREVIATIONS

A: Australian model	M: South African model
B: British model	O: Chinese model
C: Canadian model	Q: South-east Asia model
D: German model	T: Taiwan model
E: European model	U: U.S.A. model
F: French model	V: General export model (110V)
H: North European model	W: General export model (220V)
I: Indonesian model	N,X: General export model
J: Japanese model	Y: Export model
K: Korean model	

- The numbers in “QTY” show quantities for each unit.
- The parts with “--” in “Parts No.” are not available as spare parts.
- The mark “ } ” in the remarks column indicates that these parts are interchangeable.
- The second letter of the shaded ( ) part number is I, not one.

■ WARNING

Components having special characteristics are marked ⚠ and must be replaced with parts having specification equal to those originally installed.

■ OVERALL ASSEMBLY

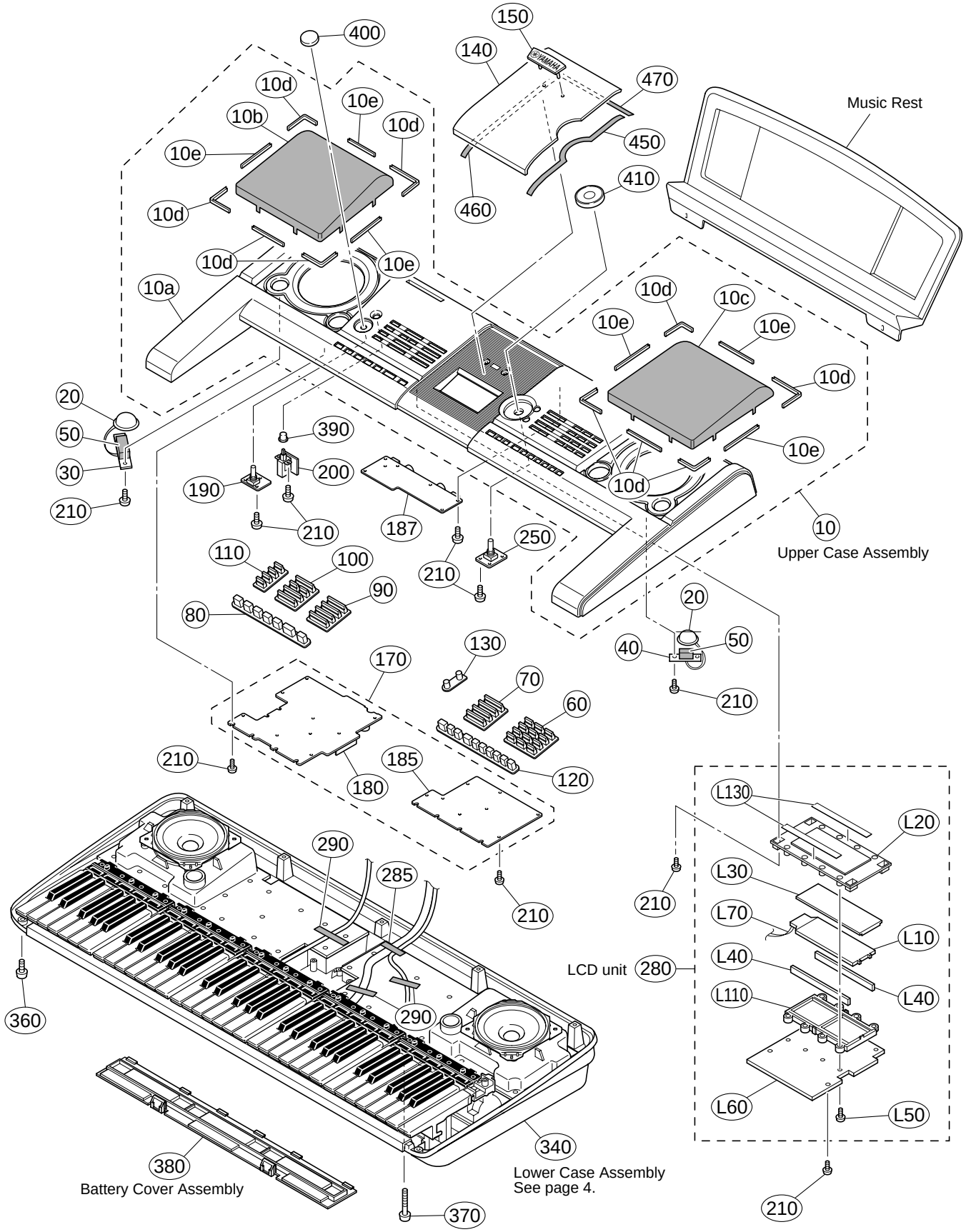

	REF NO.	PART NO.	DESCRIPTION			REMARKS	QTY	RANK
			OVERALL ASSEMBLY			PSR-293/295		
		--	Overall Assembly			PSR-293 (WC35590)		
		--	Overall Assembly			PSR-295 (WC34100)		
*	10	**WC356300**	Upper Case Assembly			PSR-293		
*	10	**WC341400**	Upper Case Assembly			PSR-295		
	10a	--	Upper Case			PSR-293 (WC32030)		
	10a	--	Upper Case			PSR-295 (WC32020)		
*	10b	**WC346200**	Speaker Grille	L				
*	10c	**WC346300**	Speaker Grille	R				
	10d	--	Dust Proof Cloth	72X6X0.5		(WC95650)	10	
	10e	--	Dust Proof Cloth	60X6X0.5		(WC95660)	6	
	20	**X0159A00**	Speaker	3.0cm		TWEETER	2	01
*	30	**WC599100**	Circuit Board	TWL(PNAM8/9)		(WC59830)(X5033B0)		
*	40	**WC599200**	Circuit Board	TWR(PNAM9/9)		(WC59830)(X5033B0)		
	50	**V3645500**	Sponge	20X10X10			2	01
*	60	**WC341500**	Panel Swith			0-9, -, +		
*	70	**WC341600**	Panel Swith			SONG, EASY SONG ARRANGER, STYLE, VOICE		
*	80	**WC342200**	Panel Swith			ACMP ON/OFF, SYNC STOP, SYNC START, INTRO/ENDING/rit., MAIN/AUTO FILL, START/STOP, TEMPO/TAP		
*	90	**WC341800**	Panel Swith			FUNCTION, PC, METRONOME, PORTABLE GRAND		
*	100	**WC341900**	Panel Swith			DEMO, MODE, L/R, REPEAT & LEARN, PERFORMANCE ASSISTANT		
*	110	**WC342000**	Panel Swith			TOUCH, HARMONY, DUAL, SPLIT		
*	120	**WC342100**	Panel Swith			MEMORY, 1, 2, REC, 1, 2, 3, 4, 5, A		
*	130	**WC522500**	Panel Swith			CATEGORY		
*	140	**WC583700**	LCD Panel					
	150	**V7660600**	Emblem					01
*	170	**AAX57320**	Circuit Board	PNAM1,2(1/9,2/9)		(WC59830)(X5033B0)		
	180	--	Circuit Board	PNAM1		(WC59840)		
	185	--	Circuit Board	PNAM2		(WC59870)		
*	187	**WC598800**	Circuit Board	PNAM3(PNAM3/9)		(WC59830)(X5033B0)		
*	190	**WC598600**	Circuit Board	VR(PNAM4/9)		(WC59830)(X5033B0)		
*	200	**WC598900**	Circuit Board	STN(PNAM7/9)		(WC59830)(X5033B0)		
	210	**EP600250**	Bind Head Tapping Screw-B	3.0X8 MFZN2Y			55	01
*	250	**WC598500**	Circuit Board	EC(PNAM5/9)		(WC59830)(X5033B0)		
	280	--	LCD Unit	04C		(WC34680)		
	285	--	Adhesive Tape	12X90		} (V591240)	4	
	285	--	Adhesive Tape	12X90		} (WB79400)	4	
	290	**VA126100**	Adhesive Tape	12X50		}	8	03
	290	--	Adhesive Tape	12X50		} (WB79380)	8	
	340	--	Lower Case Assembly			(WC62050)		
	360	**VE683000**	Bind Head Tapping Screw-B	3.0X12 MFZN2Y			16	01
	370	**V7213700**	Bind Head Tapping Screw-B	3.0X30 MFZN2Y			5	01
	380	**V9259700**	Battery Cover	PT				03
	390	**VQ218800**	Knob	POWER		STANDBY/ON		03
	400	**V8361300**	Knob	VOLUME		MASTER VOLUME		01
	410	**V8866500**	Encoder Knob			Dial		01
	450	--	Dust Proof Cushion	1		(WC95140)		
	460	--	Dust Proof Cushion	2		(WC95150)		
	470	--	Dust Proof Cushion	3		(WC95130)		
		--	LCD Unit	04C		(WC34680)		
	L10	**V8804100**	Back Light Assembly	E		}		08
	L10	**WB491100**	Back Light Assembly			}		
*	L20	**WC568200**	LCD Frame					
*	L30	**WC347000**	LCD	61				
	L40	**V7838000**	Rubber Connector	ZTT-410		}	2	03
	L40	--	Rubber Connector			} (V891750)	2	
	L50	**VE683000**	Bind Head Tapping Screw-B	3.0X12 MFZN2Y			8	01
*	L60	**WC598000**	Circuit Board	DMLCD		(WC59750)(X5032C0)		
	L70	--	Connector Assembly	BL		(WC60260)		
	L110	**V8671300**	Holder, LCD					
	L130	--	Dust Proof Cloth	0.5X95X8		(V706870)	2	
			ACCESSORIES					
		V8696800	Music Rest					05
*		**X5438A00**	CD-ROM	04PKL W/U/CAN/CHN		W,U,C,O		
*		**X5437A00**	CD-ROM	04PKL J		PSR-295 J		
⚠		**V8028600**	AC Adapter	PA-3C J		PSR-295 J		
⚠		**VY944300**	AC Adapter	PA-32 CH		PSR-295 O (Chinese Model)		10
*		**WC352000**	Japanese Gaide Set			PSR-295 J		

*: New parts

RANK: Japan only

	REF NO.	PART NO.	DESCRIPTION			REMARKS	QTY	RANK
		--	Sheet	L		(WC54520)		
		--	Sheet	R		(WD06240)		
*		WC352100	Chinese Gaide Set			PSR-295 O		
		--	Sheet	L		(WC54510)		
		--	Sheet	R		(WD06250)		

*: New parts

RANK: Japan only

■ LOWER CASE ASSEMBLY

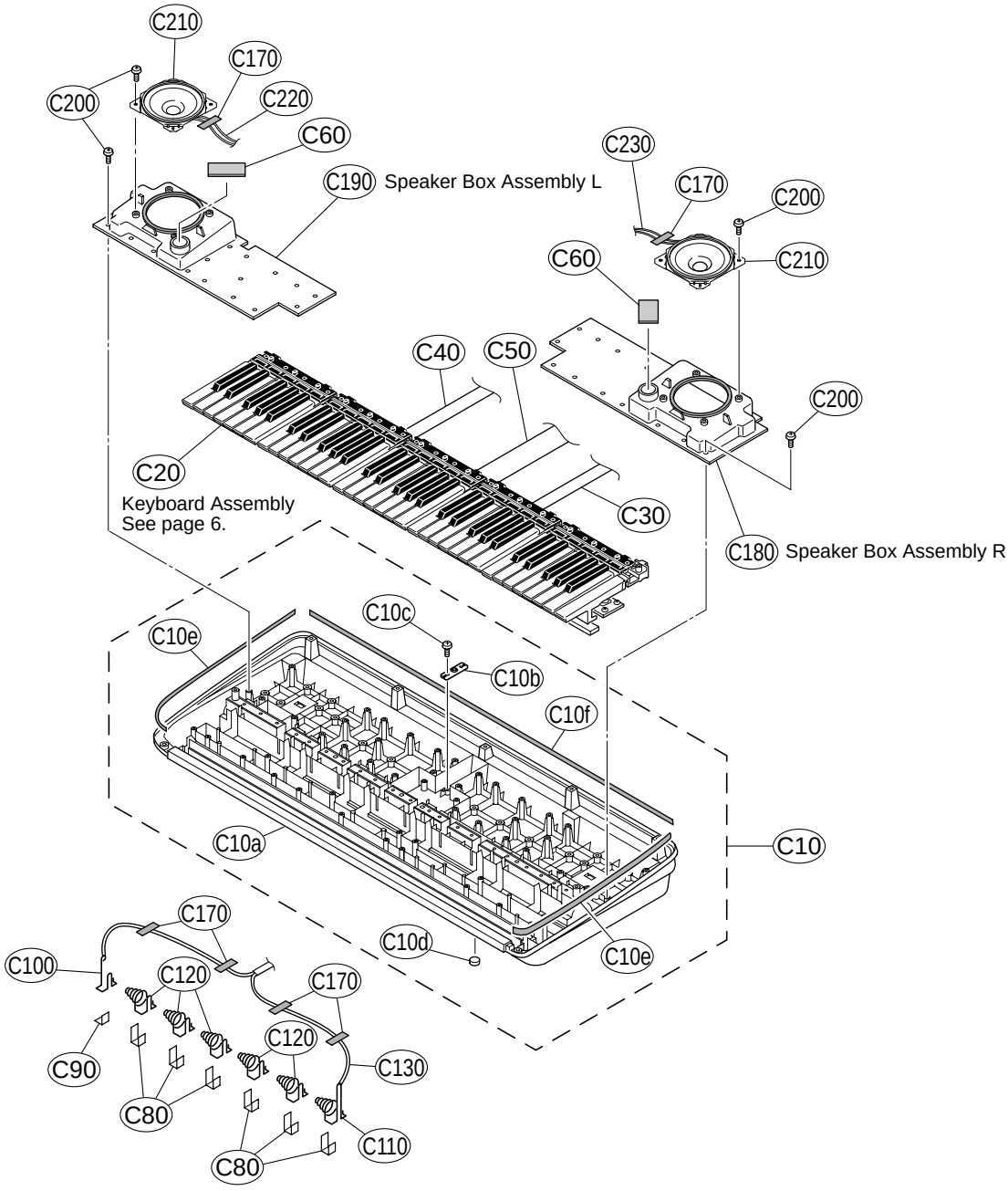

	REF NO.	PART NO.	DESCRIPTION			REMARKS	QTY	RANK
			LOWER CASE ASSEMBLY			PSR-293/295		
		--	Lower Case Assembly			(WC62050)		
	C10	V8749200	Lower Case Sub-assembly					08
	C10a	--	Lower Case			(V867160)		
	C10b	VI104400	Plate, Leg	CH			3	
	C10c	EP600250	Bind Head Tapping Screw-B	3.0X8 MFZN2Y			6	01
	C10d	CB043750	Foot Black	T1.6			5	01
	C10e	--	Cushion	PE 380X15X1.0		(V881260)	2	
	C10f	--	Cushion	PE 885X15X1.0		(V642110)		
	C20	V8695700	Keyboard Assembly	16N C61				
*	C30	WC601200	Connector Assembly	MK3				
*	C40	WC601100	Connector Assembly	MK2				
*	C50	WC601000	Connector Assembly	MK1				
	C60	--	Filter Gray	75X40X5		(WC62030)	2	
	C80	--	Dust Proof Cloth	40X13X0.5		(V771130)	6	
	C90	--	Dust Proof Cloth	13X13X0.5		(V771140)		
	C100	V7060500	Spring Terminal	(+)				01
	C110	V7060700	Spring Terminal	(-)				01
	C120	V7060200	Spring Terminal				5	01
	C130	--	Connector Assembly	BAT 2P		(V873560)		
	C170	VA126100	Adhesive Tape	12X50		(WB79380)	8	03
	C170	--	Adhesive Tape	12X50			8	
	C180	V8749500	Speaker Box Assembly	R				05
	C190	V8749400	Speaker Box Assembly	L				05
	C200	EP640130	Bind Head Tapping Screw-B	4.0X10 MFZN2Y			40	01
	C210	X2549A00	Speaker	12.0cm 4 ohm 8 W		WOOFER	2	05
	C220	--	Connector Assembly	SP-L 2P		(V873540)		
	C230	--	Connector Assembly	SP-R 2P		(V873550)		

*: New parts

RANK: Japan only

■ KEYBOARD ASSEMBLY

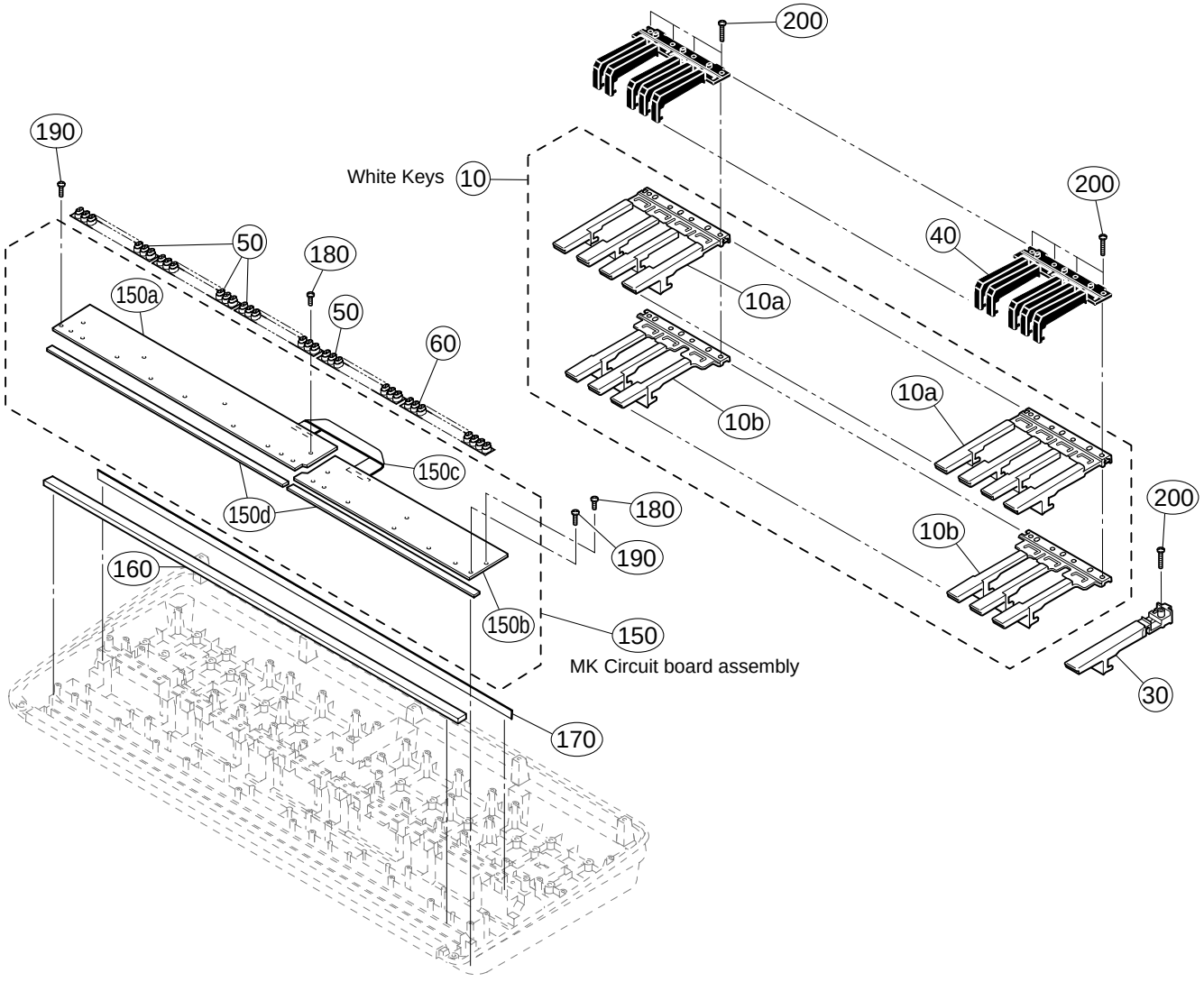

REF NO.	PART NO.	DESCRIPTION			REMARKS	QTY	RANK
		KEYBOARD ASSEMBLY			PSR-293/295		
	V8695700	Keyboard Assembly	16N C61				
10	**V34107A1**	White Key	16N CEGBDFA			5	04
10a	**--**	White Key	16N CEGB		} (V341260)	5	
10a	**--**	White Key	16N CEGB		} (WB12520)	5	
10b	**--**	White Key	16N DFA		} (V341270)	5	
10b	**--**	White Key	16N DFA		} (WB12530)	5	
30	**V4760300**	White Key	16N C'		C6		02
40	**VZ271700**	Black Key	16N			5	06
50	**V3413600**	Rubber Contact	16N-2M OCT 2M			4	04
60	**V7477400**	Rubber Contact	16N-2M 13K 2M				04
150	**--**	Circuit Board Assembly	MK		(V869560)		
150a	**V8695300**	Circuit Board	61L		(V869520)(X2336B0)		04
150b	**V8695500**	Circuit Board	61H		(V869540)(X2335C0)		04
150c	**V8696200**	Connector Assembly	16N-2M-C61 210				01
150d	**VZ302900**	Felt	U				02
160	**VZ303000**	Felt	L				02
170	**V7100100**	Support Rubber					03
180	**EP600250**	Bind Head Tapping Screw-B	3.0X8 MFZN2Y			7	01
190	**VZ313100**	Bind Head Tapping Screw-P	SP 3.0X12 MFZNBL			13	01
200	**EP600680**	Bind Head Tapping Screw-P	3.0X20 MFZN2Y		}	21	01
200	**VT069800**	Bind Head Tapping Screw-P	3.0X20 MFZN2		}	21	01

∗: New parts

RANK: Japan only

■ ELECTRICAL PARTS

	REF NO.	PART NO.	DESCRIPTION			REMARKS	QTY	RANK
			ELECTRICAL PARTS			PSR-293/295		
*		**WC598000**	Circuit Board	DMLCD		(WC59750)(X5032C0)		
*		**WC599100**	Circuit Board	TWL(PNAM8/9)		(WC59830)(X5033B0)		
*		**WC599200**	Circuit Board	TWR(PNAM9/9)		(WC59830)(X5033B0)		
*		**AAX57320**	Circuit Board	PNAM1,2(1/9,2/9)		(WC59830)(X5033B0)		
		--	Circuit Board	PNAM1		(WC59840)		
		--	Circuit Board	PNAM2		(WC59870)		
*		**WC598800**	Circuit Board	PNAM3(PNAM3/9)		(WC59830)(X5033B0)		
*		**WC598600**	Circuit Board	VR(PNAM4/9)		(WC59830)(X5033B0)		
*		**WC598900**	Circuit Board	STN(PNAM7/9)		(WC59830)(X5033B0)		
*		**WC598500**	Circuit Board	EC(PNAM5/9)		(WC59830)(X5033B0)		
		V8695300	Circuit Board	61L		(V869520)(X2336B0)		04
		V8695500	Circuit Board	61H		(V869540)(X2335C0)		04
*		**WC598000**	Circuit Board	DMLCD		(WC59750)(X5032C0)		
	C0101	**UF028100**	Electrolytic Cap. (chip)	100 10V				01
	C0102	**US145100**	Ceramic Capacitor-F (chip)	0.1000 25V Z				01
	C0103	**US145100**	Ceramic Capacitor-F (chip)	0.1000 25V Z				01
	C0104	**UF028100**	Electrolytic Cap. (chip)	100 10V				01
	C0105	**US145100**	Ceramic Capacitor-F (chip)	0.1000 25V Z				01
	C0106	**US145100**	Ceramic Capacitor-F (chip)	0.1000 25V Z				01
	C0107	**UF028100**	Electrolytic Cap. (chip)	100 10V				01
	C0201	**US145100**	Ceramic Capacitor-F (chip)	0.1000 25V Z				01
	-0208	**US145100**	Ceramic Capacitor-F (chip)	0.1000 25V Z				01
	C0301	**US145100**	Ceramic Capacitor-F (chip)	0.1000 25V Z				01
	-0304	**US145100**	Ceramic Capacitor-F (chip)	0.1000 25V Z				01
	C0305	**UF028100**	Electrolytic Cap. (chip)	100 10V				01
	C0306	**US062220**	Ceramic Capacitor-SL(chip)	220P 50V J				01
	C0307	**US063470**	Ceramic Capacitor-B (chip)	4700P 50V K				01
	C0308	**US145100**	Ceramic Capacitor-F (chip)	0.1000 25V Z				01
	C0309	**US145100**	Ceramic Capacitor-F (chip)	0.1000 25V Z				01
	C0310	**US062100**	Ceramic Capacitor-SL(chip)	100P 50V J				01
	C0311	**US145100**	Ceramic Capacitor-F (chip)	0.1000 25V Z				01
	-0327	**US145100**	Ceramic Capacitor-F (chip)	0.1000 25V Z				01
	C0401	**US062100**	Ceramic Capacitor-SL(chip)	100P 50V J				01
	-0426	**US062100**	Ceramic Capacitor-SL(chip)	100P 50V J				01
	C0427	**US145100**	Ceramic Capacitor-F (chip)	0.1000 25V Z				01
	C0428	**US145100**	Ceramic Capacitor-F (chip)	0.1000 25V Z				01
	C0501	**UF037100**	Electrolytic Cap. (chip)	10 16V				01
	C0502	**US145100**	Ceramic Capacitor-F (chip)	0.1000 25V Z				01
	C0503	**UF028100**	Electrolytic Cap. (chip)	100 10V				01
	C0504	**US145100**	Ceramic Capacitor-F (chip)	0.1000 25V Z				01
	C0505	**UF037100**	Electrolytic Cap. (chip)	10 16V				01
	-0507	**UF037100**	Electrolytic Cap. (chip)	10 16V				01
	C0508	**US063150**	Ceramic Capacitor-B (chip)	1500P 50V K				01
	C0509	**US063150**	Ceramic Capacitor-B (chip)	1500P 50V K				01
	C0510	**US062560**	Ceramic Capacitor-SL(chip)	560P 50V J				01
	C0511	**US062560**	Ceramic Capacitor-SL(chip)	560P 50V J				01
	C0512	**UF066470**	Electrolytic Cap. (chip)	4.7 50V				01
	C0513	**UF066470**	Electrolytic Cap. (chip)	4.7 50V				01
	C0514	**US062100**	Ceramic Capacitor-SL(chip)	100P 50V J				01
	C0515	**US062100**	Ceramic Capacitor-SL(chip)	100P 50V J				01
	C0516	**UF028100**	Electrolytic Cap. (chip)	100 10V				01
	C0517	**US145100**	Ceramic Capacitor-F (chip)	0.1000 25V Z				01
	C0518	**US145100**	Ceramic Capacitor-F (chip)	0.1000 25V Z				01
	C0519	**UF028100**	Electrolytic Cap. (chip)	100 10V				01
	C0601	**US145100**	Ceramic Capacitor-F (chip)	0.1000 25V Z				01
	C0602	**US145100**	Ceramic Capacitor-F (chip)	0.1000 25V Z				01
	C0603	**UF028100**	Electrolytic Cap. (chip)	100 10V				01
	C0604	**US145100**	Ceramic Capacitor-F (chip)	0.1000 25V Z				01
	C0605	**US062100**	Ceramic Capacitor-SL(chip)	100P 50V J				01
	-0610	**US062100**	Ceramic Capacitor-SL(chip)	100P 50V J				01
	C0701	**US062100**	Ceramic Capacitor-SL(chip)	100P 50V J				01
	-0716	**US062100**	Ceramic Capacitor-SL(chip)	100P 50V J				01
	C0801	**US145100**	Ceramic Capacitor-F (chip)	0.1000 25V Z				01
	-0804	**US145100**	Ceramic Capacitor-F (chip)	0.1000 25V Z				01
	C0805	**UF028100**	Electrolytic Cap. (chip)	100 10V				01
	CL301	**WA321100**	Ceramic Resonator	16.9344M CSTCE16M9				02
	CL601	**WA698700**	Ceramic Resonator	6M CSTCR6M00G15045				
	CN101	**VK025500**	Wire Trap	52147 11P TE				01
	CN401	**VK025600**	Wire Trap	52147 12P TE				01
	CN402	**VK025100**	Wire Trap	52147 7P TE				01
	CN405	**VK024900**	Wire Trap	52147 5P TE				01
	CN601	**VF728300**	Wire Trap	52147 6P TE				01
	CN603	**VK025200**	Wire Trap	52147 8P TE				01

*: New parts

RANK: Japan only

	REF NO.	PART NO.	DESCRIPTION		部 品 名	REMARKS	QTY	RANK
	CN701	**VJ861600**	Wire Trap	52147 16P TE				01
	D0601	**V2376600**	Diode	RB500V-40				01
	-0604	**V2376600**	Diode	RB500V-40				01
	D0605	**VT332900**	Diode	1SS355 TE-17				01
	D0701	**VT332900**	Diode	1SS355 TE-17				01
	-0708	**VT332900**	Diode	1SS355 TE-17				01
	IC101	**XS516A00**	IC	UPC2933T-E1		REGULATOR +3.3V		03
	IC102	**X3679A00**	IC	RH5RZ25CA-T1		REGULATOR +2.5V		03
*	IC201	**X5180100**	IC	MASK ROM		ROM 64M WAVE		
	IC202	**X2310A00**	IC	MX29LV400BTC-70		} FLASH ROM 4M		06
*	IC202	**X4490A00**	IC	MBM29LV400BC-70PFT		}		
	IC203	**X2725A00**	IC	MSM51V4265E-60TS-K		} DRAM 4M		05
	IC203	**X2726A00**	IC	GLT440L16-40TC				05
	IC204	**IS003200**	IC	HD74LV32AFPEL		} OR		01
*	IC204	**X4176A00**	IC	SN74LV32ANSR				
	IC301	**X3271A00**	IC	YMW767-V		CPU		32
	IC302	**X4374A00**	IC	S-80136ANMC-JCV-T2		RESET		
	IC401	**IS013810**	IC	SN74LV138ANSR		DECODER		01
	IC402	**IS013810**	IC	SN74LV138ANSR		DECODER		01
	IC501	**X3538A00**	IC	PCM1742KE/2K		DAC		05
	IC502	**X2331A00**	IC	NJM4580E		OP AMP		01
*	IC601	**X5186100**	IC	M38K07M4L-307HP		USB CPU		
	IC801	**XZ987A00**	IC	ML9040A-B01GA		LCD DRIVER		05
	L0301	**VY657200**	Chip Inductance	600 BK1608HM601				01
	L0302	**VY657200**	Chip Inductance	600 BK1608HM601				01
	L0501	**VY657200**	Chip Inductance	600 BK1608HM601				01
	L0601	**VY657200**	Chip Inductance	600 BK1608HM601				01
	RA301	**RE047100**	Resistor Array	10KX4				01
	RA302	**RE044680**	Resistor Array	68X4				01
	-0305	**RE044680**	Resistor Array	68X4				01
	RA401	**RE046100**	Resistor Array	1KX4				01
	-0403	**RE046100**	Resistor Array	1KX4				01
	RA404	**RE046470**	Resistor Array	4.7KX4				01
	-0406	**RE046470**	Resistor Array	4.7KX4				01
	RA407	**RE045100**	Resistor Array	100X4				01
	-0409	**RE045100**	Resistor Array	100X4				01
	R0202	**RD357100**	Carbon Resistor (chip)	10.0K 63M J				01
	R0203	**RD357470**	Carbon Resistor (chip)	47.0K 63M J				01
	-0209	**RD357470**	Carbon Resistor (chip)	47.0K 63M J				01
	R0301	**RD356100**	Carbon Resistor (chip)	1.0K 63M J				01
	R0303	**RD359100**	Carbon Resistor (chip)	1.0M 63M J				01
	R0304	**RD355470**	Carbon Resistor (chip)	470.0 63M J				01
	R0305	**RD357100**	Carbon Resistor (chip)	10.0K 63M J				01
	R0306	**RD357470**	Carbon Resistor (chip)	47.0K 63M J				01
	R0307	**RD357470**	Carbon Resistor (chip)	47.0K 63M J				01
	R0401	**RD355100**	Carbon Resistor (chip)	100.0 63M J				01
	R0402	**RD355100**	Carbon Resistor (chip)	100.0 63M J				01
	R0501	**RD355390**	Carbon Resistor (chip)	390.0 63M J				01
	R0502	**RD355390**	Carbon Resistor (chip)	390.0 63M J				01
	R0503	**RD356470**	Carbon Resistor (chip)	4.7K 63M J				01
	-0510	**RD356470**	Carbon Resistor (chip)	4.7K 63M J				01
	R0511	**RD355100**	Carbon Resistor (chip)	100.0 63M J				01
	R0512	**RD355100**	Carbon Resistor (chip)	100.0 63M J				01
	R0513	**RD356120**	Carbon Resistor (chip)	1.2K 63M J				01
	R0514	**RD356150**	Carbon Resistor (chip)	1.5K 63M J				01
	R0515	**RD354680**	Carbon Resistor (chip)	68.0 63M J				01
	R0516	**RD354680**	Carbon Resistor (chip)	68.0 63M J				01
	R0517	**RD354470**	Carbon Resistor (chip)	47.0 63M J				01
	-0520	**RD354470**	Carbon Resistor (chip)	47.0 63M J				01
	R0601	**RD357470**	Carbon Resistor (chip)	47.0K 63M J				01
	R0604	**RD357470**	Carbon Resistor (chip)	47.0K 63M J				01
	R0605	**RD358100**	Carbon Resistor (chip)	100.0K 63M J				01
	R0606	**RD356150**	Carbon Resistor (chip)	1.5K 63M J				01
	R0607	**RD354270**	Carbon Resistor (chip)	27.0 63M J				01
	R0608	**RD354270**	Carbon Resistor (chip)	27.0 63M J				01
	R0609	**RD357470**	Carbon Resistor (chip)	47.0K 63M J				01
	R0610	**RD357100**	Carbon Resistor (chip)	10.0K 63M J				01
	R0611	**RD356100**	Carbon Resistor (chip)	1.0K 63M J				01
	R0612	**RD357470**	Carbon Resistor (chip)	47.0K 63M J				01
	R0613	**RD356270**	Carbon Resistor (chip)	2.7K 63M J				01
	R0614	**RD356220**	Carbon Resistor (chip)	2.2K 63M J				01
	R0615	**RD357100**	Carbon Resistor (chip)	10.0K 63M J				01
	R0616	**RD357470**	Carbon Resistor (chip)	47.0K 63M J				01
	-0619	**RD357470**	Carbon Resistor (chip)	47.0K 63M J				01
	R0621	**RD358330**	Carbon Resistor (chip)	330.0K 63M J				01

*: New parts

RANK: Japan only

REF NO.	PART NO.	DESCRIPTION		部品名	REMARKS	QTY	RANK
R0622	**RD357470**	Carbon Resistor (chip)	47.0K 63M J				01
R0623	**RD357820**	Carbon Resistor (chip)	82.0K 63M J				01
R0624	**RD357220**	Carbon Resistor (chip)	22.0K 63M J				01
R0626	**RD356100**	Carbon Resistor (chip)	1.0K 63M J				01
R0627	**RD357100**	Carbon Resistor (chip)	10.0K 63M J				01
R0629	**RD356150**	Carbon Resistor (chip)	1.5K 63M J				01
R0630	**RD357470**	Carbon Resistor (chip)	47.0K 63M J				01
R0631	**RD350000**	Carbon Resistor (chip)	0 63M J				01
R0632	**RD350000**	Carbon Resistor (chip)	0 63M J				01
R0633	**RD357470**	Carbon Resistor (chip)	47.0K 63M J				01
R0634	**RD357470**	Carbon Resistor (chip)	47.0K 63M J				01
R0635	**RD356100**	Carbon Resistor (chip)	1.0K 63M J				01
R0636	**RD356100**	Carbon Resistor (chip)	1.0K 63M J				01
R0637	**RD357100**	Carbon Resistor (chip)	10.0K 63M J				01
R0701	**RD355100**	Carbon Resistor (chip)	100.0 63M J				01
-0708	**RD355100**	Carbon Resistor (chip)	100.0 63M J				01
R0709	**RD356100**	Carbon Resistor (chip)	1.0K 63M J				01
-0716	**RD356100**	Carbon Resistor (chip)	1.0K 63M J				01
R0717	**RD357330**	Carbon Resistor (chip)	33.0K 63M J				01
-0724	**RD357330**	Carbon Resistor (chip)	33.0K 63M J				01
R0801	**RD356150**	Carbon Resistor (chip)	1.5K 63M J				01
R0802	**RD355220**	Carbon Resistor (chip)	220.0 63M J				01
R0803	**RD354680**	Carbon Resistor (chip)	68.0 63M J				01
R0804	**RF457910**	Carbon Resistor (chip)	91.0K : D				
R0805	**RD356220**	Carbon Resistor (chip)	2.2K 63M J				01
-0809	**RD356220**	Carbon Resistor (chip)	2.2K 63M J				01
R0810	**RD357470**	Carbon Resistor (chip)	47.0K 63M J				01
R0811	**RD357100**	Carbon Resistor (chip)	10.0K 63M J				01
TH801	**V9140600**	Chip Thermistor	ERTJ1VT152J 1.5K				
TR601	**VV556500**	Transistor	2SA1037AK Q,R,S		}		01
TR601	**V8819500**	Transistor	2SA1235A E,F		}		
TR602	**VV556400**	Transistor	2SC2412K Q,R,S		}		01
TR602	**V4767500**	Transistor	2SD601A-(TX) Q,R,S				01
TR603	**WB107300**	Transistor Array	IMH10A T110				05
TR604	**WB107300**	Transistor Array	IMH10A T110				05
TR605	**VV556400**	Transistor	2SC2412K Q,R,S		}		01
TR605	**V4767500**	Transistor	2SD601A-(TX) Q,R,S				01
TR606	**VV556500**	Transistor	2SA1037AK Q,R,S		}		01
TR606	**V8819500**	Transistor	2SA1235A E,F				
*	**WC599100**	Circuit Board	TWL(PNAM8/9)		(WC59830)(X5033B0)		
*	**WC599200**	Circuit Board	TWR(PNAM9/9)		(WC59830)(X5033B0)		
*	**AAX57320**	Circuit Board	PNAM1,2(1/9,2/9)		(WC59830)(X5033B0)		
	--	Circuit Board	PNAM1		(WC59840)		
	--	Circuit Board	PNAM2		(WC59870)		
*	**WC598800**	Circuit Board	PNAM3(PNAM3/9)		(WC59830)(X5033B0)		
*	**WC598600**	Circuit Board	VR(PNAM4/9)		(WC59830)(X5033B0)		
*	**WC598900**	Circuit Board	STN(PNAM7/9)		(WC59830)(X5033B0)		
*	**WC598500**	Circuit Board	EC(PNAM5/9)		(WC59830)(X5033B0)		
	EP600190	Bind Head Tapping Screw-B	3.0X8 MFZN2BL				01
	--	Jumper Wire	0.55		(VA07890)		
C0101	**UA654470**	Mylar Capacitor	0.0470 50V J				01
C0102	**UA654470**	Mylar Capacitor	0.0470 50V J				01
C0103	**UR749220**	Electrolytic Cap.	2200 25.0V		}		03
C0103	**--**	Electrolytic Cap.	2200 25.0V		(V252410)		
C0104	**VC694800**	Semiconductive Cera. Cap.	0.1000 25V Z				01
C0105	**UR867100**	Electrolytic Cap.	10.00 50.0V				01
C0106	**VC694800**	Semiconductive Cera. Cap.	0.1000 25V Z				01
C0107	**VC694800**	Semiconductive Cera. Cap.	0.1000 25V Z				01
C0108	**UR867100**	Electrolytic Cap.	10.00 50.0V				01
C0109	**UR867100**	Electrolytic Cap.	10.00 50.0V				01
C0110	**VC694800**	Semiconductive Cera. Cap.	0.1000 25V Z				01
C0111	**VC694800**	Semiconductive Cera. Cap.	0.1000 25V Z				01
C0112	**UR867100**	Electrolytic Cap.	10.00 50.0V				01
C0201	**UA653150**	Mylar Capacitor	1500P 50V J				01
C0202	**UA653150**	Mylar Capacitor	1500P 50V J				01
C0203	**VE327200**	Monolithic Mylar Capacitor	1.0 50V J				02
C0204	**VE327200**	Monolithic Mylar Capacitor	1.0 50V J				02
C0205	**UA652470**	Mylar Capacitor	470P 50V J				01
C0206	**UA652470**	Mylar Capacitor	470P 50V J				01
C0207	**UR838100**	Electrolytic Cap.	100.00 16.0V				01
C0208	**UR827330**	Electrolytic Cap.	33.00 10.0V				01
C0209	**UR867100**	Electrolytic Cap.	10.00 50.0V				01
C0210	**VC694800**	Semiconductive Cera. Cap.	0.1000 25V Z				01
C0211	**VC694800**	Semiconductive Cera. Cap.	0.1000 25V Z				01

*: New parts

RANK: Japan only

	REF NO.	PART NO.	DESCRIPTION		部 品 名	REMARKS	QTY	RANK
	C0212	**UR867100**	Electrolytic Cap.	10.00 50.0V				01
	C0213	**UA654470**	Mylar Capacitor	0.0470 50V J				01
	-0216	**UA654470**	Mylar Capacitor	0.0470 50V J				01
	C0301	**UR837470**	Electrolytic Cap.	47.00 16.0V				01
	C0302	**UR837470**	Electrolytic Cap.	47.00 16.0V				01
	C0401	**FG652100**	Ceramic Capacitor-SL	100P 50V J				01
	CN101	**LB918030**	Base Post Connector	XH 3P TE				01
	CN102	**VK025500**	Wire Trap	52147 11P TE				01
	CN103	**VI878900**	Cable Holder	51048 11P TE				01
	CN104	**VK024800**	Wire Trap	52147 4P TE				01
	CN105	**VI878200**	Cable Holder	51048 4P TE				01
	CN106	**VK024600**	Wire Trap	52147 2P TE				01
	CN107	**VI878900**	Cable Holder	51048 11P TE				01
	CN201	**VK024900**	Wire Trap	52147 5P TE				01
	CN202	**VI878300**	Cable Holder	51048 5P TE				01
	CN301	**LB918020**	Base Post Connector	XH 2P TE				01
	CN302	**LB918020**	Base Post Connector	XH 2P TE				01
	CN303	**VI878000**	Cable Holder	51048 2P TE				01
	CN304	**VI878000**	Cable Holder	51048 2P TE				01
	CN401	**VI878400**	Cable Holder	51048 6P TE				01
	CN501	**VI879400**	Cable Holder	51048 16P TE				01
	CN502	**VI878900**	Cable Holder	51048 11P TE				01
	CN503	**VI878600**	Cable Holder	51048 8P TE				01
	CN504	**VK024700**	Wire Trap	52147 3P TE				01
	CN505	**VI878900**	Cable Holder	51048 11P TE				01
	CN601	**VI878100**	Cable Holder	51048 3P TE				01
⚠	D0101	**VV731400**	Diode	2A02M		}		01
⚠	D0101	**V8603100**	Diode	2A02GM				
⚠	D0102	**VV731400**	Diode	2A02M		}		01
⚠	D0102	**V8603100**	Diode	2A02GM				
	EC601	**VU481300**	Encoder	REB161 PVB 15F		Dial		03
	IC101	**XU814A00**	IC	PQ05RD11		REGULATOR +5V 1.0A		03
*	IC102	**X5231A00**	IC	PQ6RD083		REGULATOR +6.3V 0.8A		
*	IC201	**XY209A00**	IC	LA4625		POWER AMP		
	J0101	**--**	Jumper Wire	0.55		(VA07890)		
	J0401	**--**		0.55		(VA07890)		
	-403	**--**		0.55		(VA07890)		
⚠	JK101	**LB302260**	Connector	HEC0470-01-630		} DC IN 12V		02
⚠	JK101	**V6557600**	Connector	HTJ-020-05AZ		}		04
	JK301	**LB101870**	Phone Jack	YKB21-5006				03
	JK401	**V6802600**	Jack	USB 4P SE		USB		02
	JK402	**VC687500**	Phone Jack	YKB21-5014		SUSTAIN		01
	K1	**--**	Heat Sink	#2871/2872		(WC28360)		
*	LD501	**WC762200**	LED Red			SONG		
*	LD502	**WC762200**	LED Red			EASY SONG ARRANGER		
*	LD503	**WC762200**	LED Red			STYLE		
*	-504	**WC762200**	LED Red			VOICE		
⚠	L0101	**VQ884000**	Line Filter	CM08RB01		}		03
⚠	L0101	**V6795600**	Line Filter	BDL40-01				
	L0301	**VB835000**	Coil	FL5R200QNT 20uH				01
	L0302	**VB835000**	Coil	FL5R200QNT 20uH				01
	L0303	**--**	Jumper Wire	0.55		(VA07890)		
	L0402	**VB835000**	Coil	FL5R200QNT 20uH				01
	-0405	**VB835000**	Coil	FL5R200QNT 20uH				01
	R0101	**HF755180**	Carbon Resistor	180.0 1/4 J				01
	R0102	**HF755150**	Carbon Resistor	150.0 1/4 J				01
	R0201	**HF757100**	Carbon Resistor	10.0K 1/4 J				01
	R0202	**HF757100**	Carbon Resistor	10.0K 1/4 J				01
	R0203	**HF756220**	Carbon Resistor	2.2K 1/4 J				01
	R0204	**HF756220**	Carbon Resistor	2.2K 1/4 J				01
	R0205	**HF757100**	Carbon Resistor	10.0K 1/4 J				01
*	R0206	**WD556700**	Flame Proof Carbon Resistor	2.2 1/4 J				
*	-209	**WD556700**	Flame Proof Carbon Resistor	2.2 1/4 J				
	R0301	**HF755100**	Carbon Resistor	100.0 1/4 J				01
	R0302	**HF755100**	Carbon Resistor	100.0 1/4 J				01
	R0303	**HF755330**	Carbon Resistor	330.0 1/4 J				01
	R0304	**HF755330**	Carbon Resistor	330.0 1/4 J				01
	R0401	**HF758100**	Carbon Resistor	100.0K 1/4 J				01
	R0402	**HF756100**	Carbon Resistor	1.0K 1/4 J				01
	R0501	**HF756120**	Carbon Resistor	1.2K 1/4 J				01
	-0508	**HF756120**	Carbon Resistor	1.2K 1/4 J				01
⚠	SW101	**VY980400**	Push Switch	SDDLB1 J,UC,CEE		} STANDBY/ON		03
⚠	SW101	**V9661700**	Push Switch	SY16-32-4(U99S2)/T		}		03
⚠	TH101	**V8132800**	Protector Circuit	MF-R185-AP				
*	VR201	**WC709800**	Rotary Variable Resistor	A 5K XV014111YGPV		MASTER VOLUME		

*: New parts

RANK: Japan only

REF NO.	PART NO.	DESCRIPTION		部 品 名	REMARKS	QTY	RANK
WA102	--	Connector Assembly	AM		(WC60180)		
WA105	--	Connector Assembly	STAN		(WC60170)		
WA107	--	Connector Assembly	AM		(WC60180)		
WA202	--	Connector Assembly	VOL		(WC60160)		
WA303	--	Connector Assembly	TW6		(WC60270)		
WA304	--	Connector Assembly	TW6		(WC60270)		
WA401	--	Connector Assembly	JACK		(WC60190)		
WA501	--	Connector Assembly	PN1		(WC60230)		
WA502	--	Connector Assembly	PN3		(WC60250)		
WA503	--	Connector Assembly	PN2		(WC60240)		
WA504	--	Connector Assembly	ENC		(WC60210)		
	V8695300	Circuit Board	61L		(V869520)(X2336B0)		04
	VQ769500	Masking Tape	W=15				
CN04	**VK025600**	Wire Trap	52147 12P TE				01
CN05	**VK025100**	Wire Trap	52147 7P TE				01
D001	**VV437800**	Diode	1N4148(DO-34)				01
-072	**VV437800**	Diode	1N4148(DO-34)				01
	V8695500	Circuit Board	61H		(V869540)(X2335C0)		04
	VQ769500	Masking Tape	W=15				
CN01	**VK025600**	Wire Trap	52147 12P TE				01
CN02	**VK024900**	Wire Trap	52147 5P TE				01
CN03	**VK025600**	Wire Trap	52147 12P TE				01
D073	**VV437800**	Diode	1N4148(DO-34)				01
-122	**VV437800**	Diode	1N4148(DO-34)			2	01
						2	
	X0159A00	Speaker	3.0cm		TWEETER		01
	X2549A00	Speaker	12.0cm 4 ohm 8 W		WOOFER		05
	V8804100	Back Light Assembly	E		}		08
	WB491100	Back Light Assembly					
	WC347000	LCD	61				

∗: New parts

RANK: Japan only

■ PSR-293/295 OVERALL CIRCUIT DIAGRAM 1/2 (PNAM1, PNAM2, PNAM3 (PANM 3/9), VR (PNAM 4/9), ENC (PNAM 5/9), STN (PNAM 7/9), TWL (PNAM 8/9), TWR (PNAM 9/9), 61H-MK, 61L-MK)

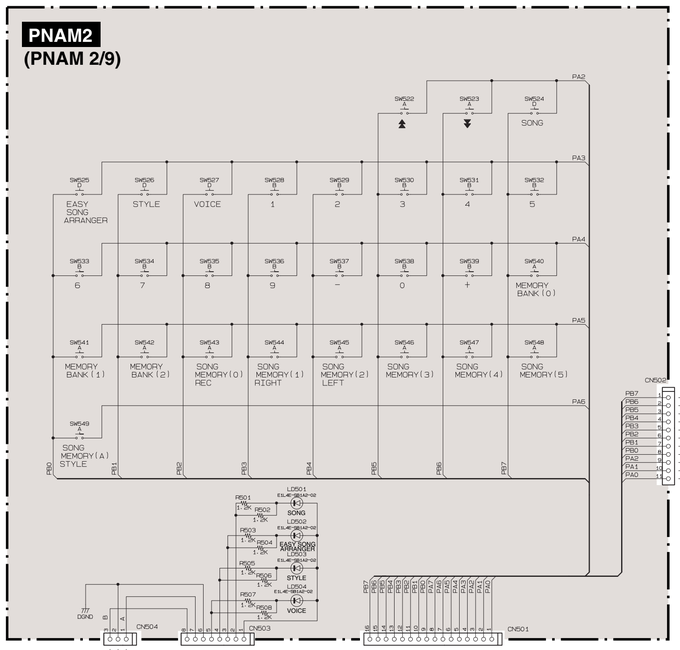

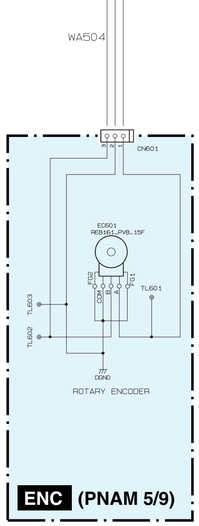

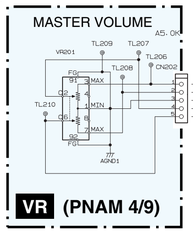

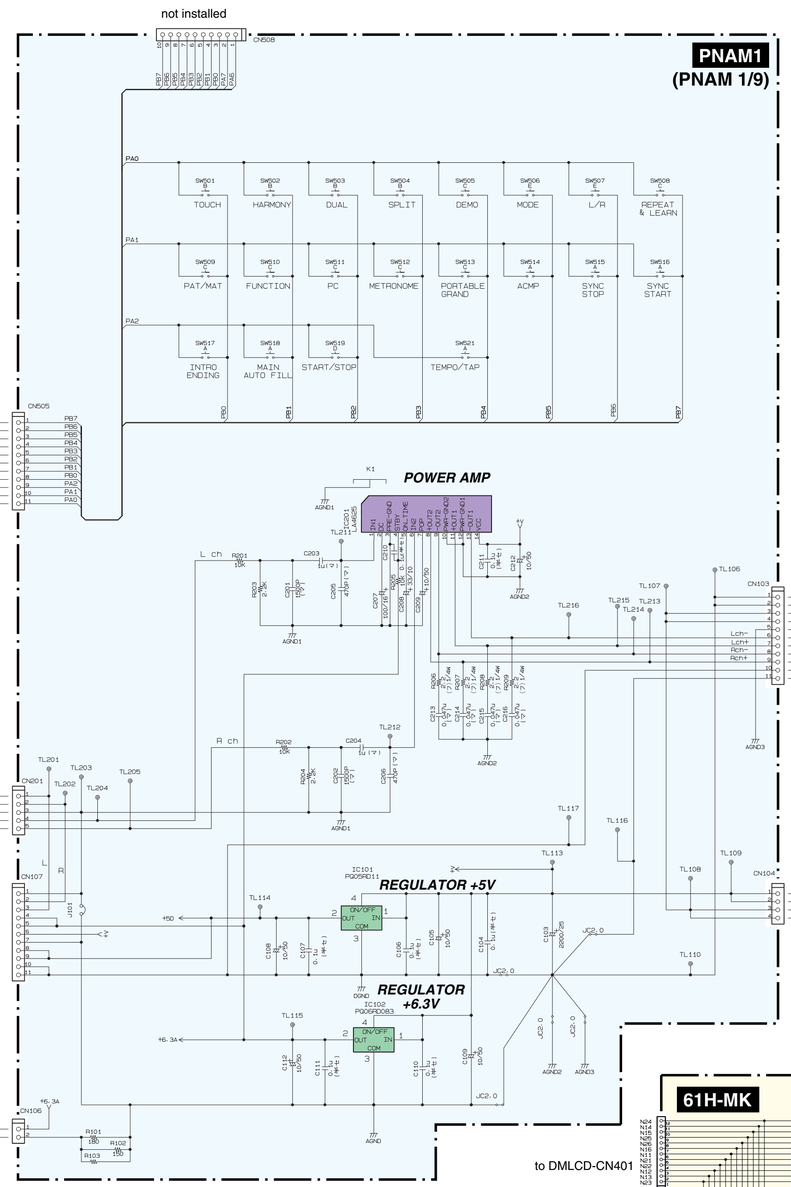

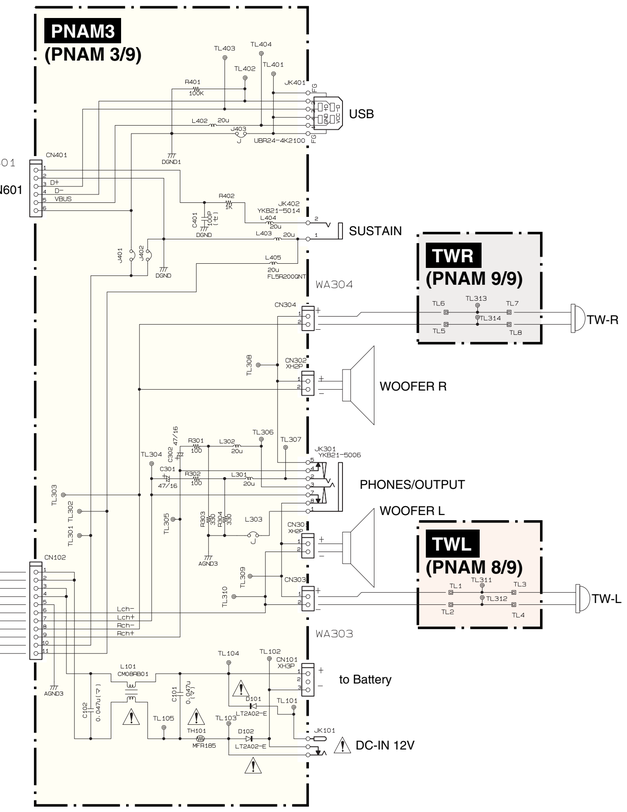

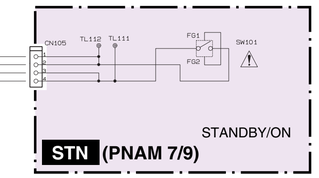

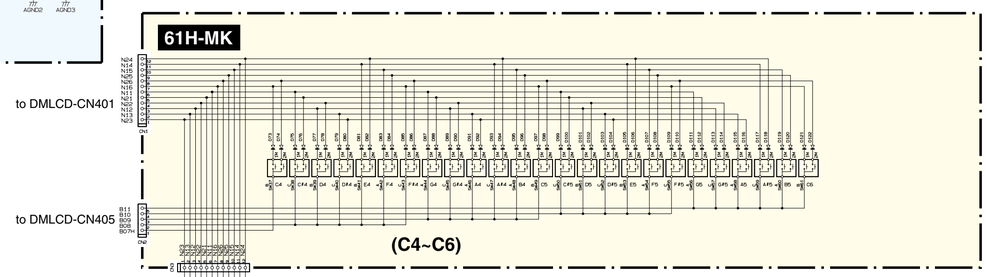

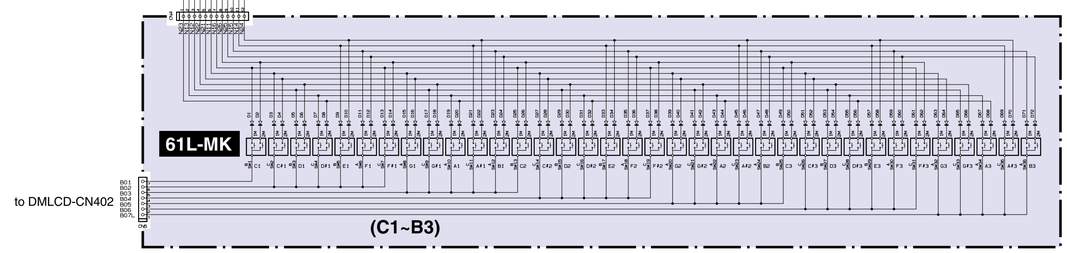

PNAM:28CC1-8831820 ⚠
61H-MK:28CC1-8822437
61L-MK:28CC1-8822436

(セ): Ceramic Capacitor
(半セ): Semiconductive Ceramic Capacitor
(マ): Mylar Capacitor
(フ): Flame Proof Carbon Resister

Note:See parts list for details of circuit board component parts.

•2A02M (VV731400)
•2A02GM (V8603100)
DIODE
PNAM3: D0101,D0102

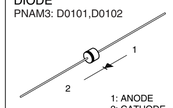

•PQ05RD11 TO-220 (XU814A00)
REGULATOR +5V 1.0A
PNAM1: IC101

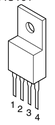

•PQ06RD083 TO-220 (X5231A00)
REGULATOR +6.3V 0.8A
PNAM1: IC102

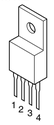

■ PSR-293/295 OVERALL CIRCUIT DIAGRAM 1/2 (PNAM1, PNAM2, PNAM3 (PANM 3/9), VR (PNAM 4/9), ENC (PNAM 5/9), STN (PNAM 7/9), TWL (PNAM 8/9), TWR (PNAM 9/9), 61H-MK, 61L-MK)

■ PSR-293/295 OVERALL CIRCUIT DIAGRAM 2/2 (DMLCD)

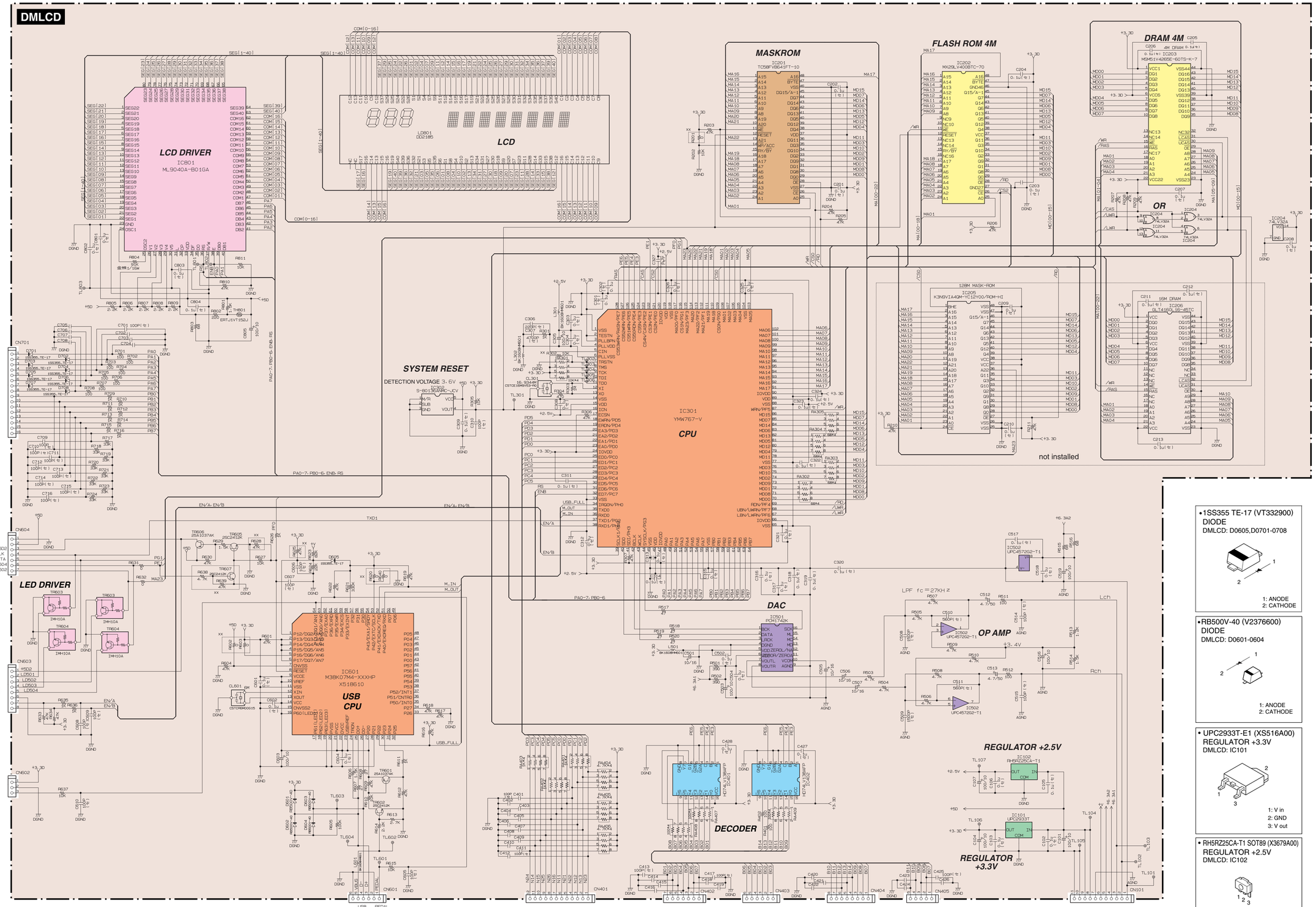

Note:See parts list for details of circuit board component parts.

(セ) : Ceramic Capacitor
金被1/16W : Metal Film Resistor (chip)
xx : not installed

28CC1-8831821 ⚠

■ PSR-293/295 OVERALL CIRCUIT DIAGRAM 2/2 (DMLCD)