PORTATONE

PSR-290/PSR-292

SERVICE MANUAL



PSR-290

* PSR-292 is only for the export.

■ **CONTENTS**

SPECIFICATIONS **3/4**
PANEL LAYOUT **5**
CIRCUIT BOARD LAYOUT & WIRING **7**
DISASSEMBLY PROCEDURE **9**
LSI PIN DESCRIPTION **15**
IC BLOCK DIAGRAM **17**
CIRCUIT BOARDS **18**
TEST PROGRAM **23/26**
DATA BACKUP **29**
DATA INITIALIZATION **30**
MIDI IMPLEMENTATION CHART **31**
BLOCK DIAGRAM
OVERALL CIRCUIT DIAGRAM
PARTS LIST

This document is printed on chlorine free (ECF) paper with soy ink.

PK **001680**

YAMAHA
HAMAMATSU, JAPAN
1.635K-977 Printed in Japan '02.06

IMPORTANT NOTICE

This manual has been provided for the use of authorized Yamaha Retailers and their service personnel. It has been assumed that basic service procedures inherent to the industry, and more specifically Yamaha Products, are already known and understood by the users, and have therefore not been restated.

WARNING : Failure to follow appropriate service and safety procedures when servicing this product may result in personal injury, destruction of expensive components and failure of the product to perform as specified. For these reasons, we advise all Yamaha product owners that all service required should be performed by an authorized Yamaha Retailer or the appointed service representative.

IMPORTANT : This presentation or sale of this manual to any individual or firm does not constitute authorization, certification, recognition of any applicable technical capabilities, or establish a principal-agent relationship of any form.

The data provided is believed to be accurate and applicable to the unit (s) indicated on the cover. The research engineering, and service departments of Yamaha are continually striving to improve Yamaha products. Modifications are, therefore, inevitable and changes in specification are subject to change without notice or obligation to retrofit. Should any discrepancy appear to exist, please contact the distributor's Service Division.

WARNING : Static discharges can destroy expensive components. Discharge any static electricity your body may have accumulated by grounding yourself to the ground bus in the unit (heavy gauge black wires connect to this bus).

IMPORTANT : Turn the unit OFF during disassembly and parts replacement. Recheck all work before you apply power to the unit.

WARNING : CHEMICAL CONTENT NOTICE !

The solder used in the production of this product contains LEAD. In addition, other electrical/electronic and/or plastic (where applicable) components may also contain traces of chemicals found by the California Health and Welfare Agency (and possibly other entities) to cause cancer and/or birth defects or other reproductive harm.

DO NOT PLACE SOLDER, ELECTRICAL/ELECTRONIC OR PLASTIC COMPONENTS IN YOUR MOUTH FOR ANY REASON WHAT SO EVER!

Avoid prolonged, unprotected contact between solder and your skin! When soldering, do not inhale solder fumes or expose eyes to solder/flux vapor!

If you come in contact with solder or components located inside the enclosure of this product, wash your hands before handling food.

■ WARNING

Components having special characteristics are marked ⚠ and must be replaced with parts having specification equal to those originally installed.

■ SPECIFICATIONS

Keyboards
- 61 standard-size keys (C1 - C6), with Touch Response.

Display
- Large multi-function LCD display (backlit)

Setup
- STANDBY/ON
- MASTER VOLUME : MIN - MAX

Panel Controls
- SONG, VOICE, STYLE, M.D.B., DICTIONARY, DJ, PC, LESSON L, R, METRONOME, PORTABLE GRAND, DEMO, FUNCTION(TRANSPOSE), TOUCH, HARMONY, DUAL, SPLIT, TEMPO/TAP, ONE TOUCH SETTING, [0]-[9], [+](YES), [-](NO), CATEGORY, SELECT, Dial

Voice
- 108 panel voices + 12 drum kits + 480 XG voices + 5 DJ voices
- Polyphony : 32
- DUAL
- SPLIT

Style
- 135 styles
- Style Control : ACMP ON/OFF, SYNC STOP, SYNC START, START/STOP, INTRO ENDING, MAIN/AUTO FILL
- Fingering : Multi fingering
- Style Volume

Music Database
- 208

Yamaha Educational Suite
- Dictionary
- Lesson 1-4

One Touch Setting
- Preset A and B (for each style)
- Memory

Function
- Transpose, Tuning, Split Point, Touch Sensitivity, Main Voice - Volume; Octave; Pan; Reverb Send Level; Chorus Send Level; DSP Send Level, Dual Voice - Voice; Volume; Octave; Pan; Reverb Send Level; Chorus Send Level; DSP Send Level, Split Voice - Voice; Volume; Octave; Pan; Reverb Send Level; Chorus Send Level; DSP Send Level, Reverb Type, Chorus Type, DSP Type, Harmony Type, Harmony Volume, Local On/Off, External Clock, Bulk Data Send, Initial Setup Send, Keyboard Out, Style Out, Song Out, Style Volume, Song Volume, Metronome Volume, Time Signature, Lesson Track (R), Lesson Track (L), Grade On/Off, Demo and DJ Cancel

Effects
- Reverb : 8 types
- Chorus : 4 types
- DSP : 38 types
- Harmony : 26 types

Song
- 100 Songs + 5 User Songs + Flash Memory
- Song Clear, Track Clear
- Song Volume

Recording
- Song
  User Song : 5 Songs
  Recording Tracks : 1, 2, 3, 4, 5, STYLE

MIDI
- Local On/Off
- Initial Setup Send
- External Clock
- Bulk Data Send
- Keyboard Out
- Style Out
- Song Out

Auxiliary jacks
- PHONES/OUTPUT, DC IN 12V, MIDI IN/OUT, SUSTAIN

Amplifier
- 3.0W + 3.0W

Speakers
- 12cm x 2 + 3cm x 2

Power Consumption (when using PA-3C power adaptor)
- UL/CSA :14W
- CE :15W

Power Supply
- Adaptor : Yamaha PA-3C AC power adaptor
- Batteries : Six "D" size, R20P (LR20) or equivalent batteries

Dimensions (W x D x H)
- 952 x 389 x 140 mm (37-1/2" x 15-1/3" x 5-1/2")

Weight
- 6.8 kg (15 lbs.)

Supplied Accessories
- Music Stand
- Owner's Manual
- Song Book

Optional Accessories
- Headphones : HPE-150
- AC power adaptor : PA-3B/3C
- Footswitch : FC4, FC5
- Keyboard stand : L-2C

■ PANEL LAYOUT

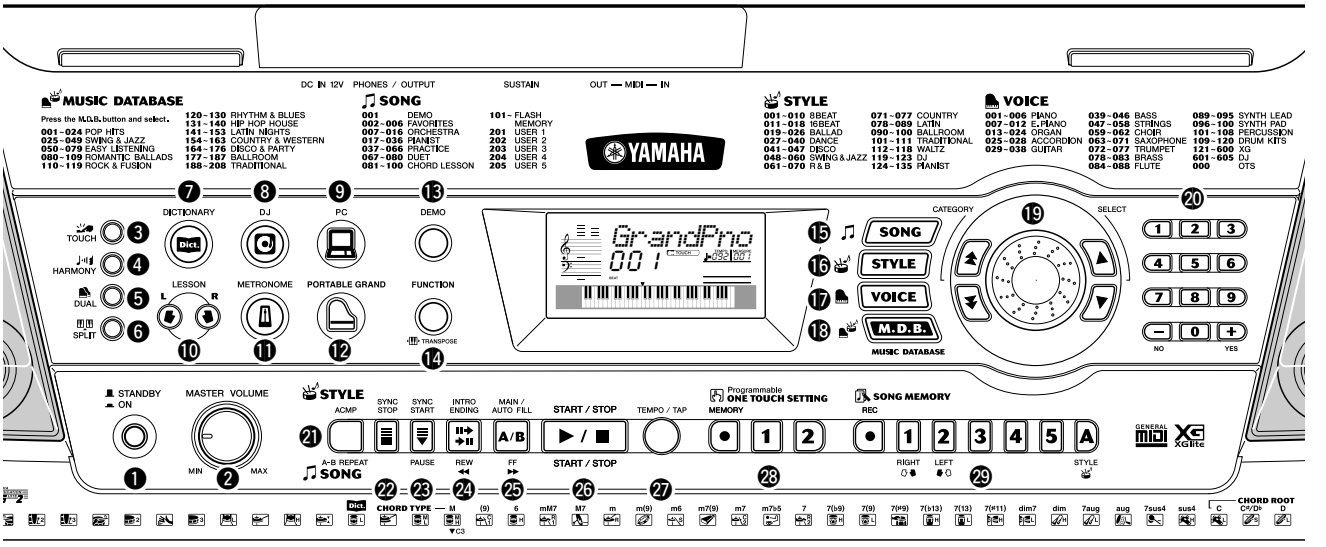

■ Front Panel

❶ [STANDBY/ON] (power switch)
❷ [MASTER VOLUME] dial
❸ [TOUCH] button
❹ [HARMONY] button
❺ [DUAL] button
❻ [SPLIT] button
❼ [DICTIONARY] button
❽ [DJ] button
❾ [PC] button
❿ LESSON [L] (Left) and [R] (Right) buttons
⓫ [METRONOME] button
⓬ [PORTABLE GRAND] button
⓭ [DEMO] button
⓮ [FUNCTION] button

⓯ [SONG] button
⓰ [STYLE] button
⓱ [VOICE] button
⓲ [M.D.B.] (MUSIC DATABASE) button
⓳ Dial, CATEGORY [▲]/[▼] buttons,
SELECT [▲]/[▼] buttons
⓴ Numeric keypad, [+/YES] and [-/NO] buttons
㉑ [ACMP] / [A-B REPEAT] button
㉒ [SYNC STOP] button
㉓ [SYNC START] / [PAUSE] button
㉔ [INTRO ENDING] / [REW ◀◀] button
㉕ [MAIN/AUTO FILL] / [FF ▶▶] button
㉖ [START/STOP] button
㉗ [TEMPO/TAP] button
㉘ ONE TOUCH SETTING buttons
[MEMORY], [1], [2]
㉙ SONG MEMORY buttons
[REC], [1]-[5], [A]

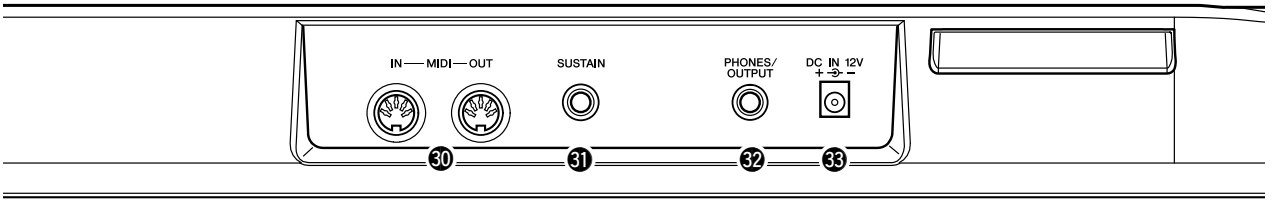

■ Rear Panel

㉚ [MIDI IN], [MIDI OUT] terminals
㉛ [SUSTAIN] jack
㉜ [PHONES/OUTPUT] jack
㉝ [DC IN 12V] jack

■ CIRCUIT BOARD LAYOUT & WIRING

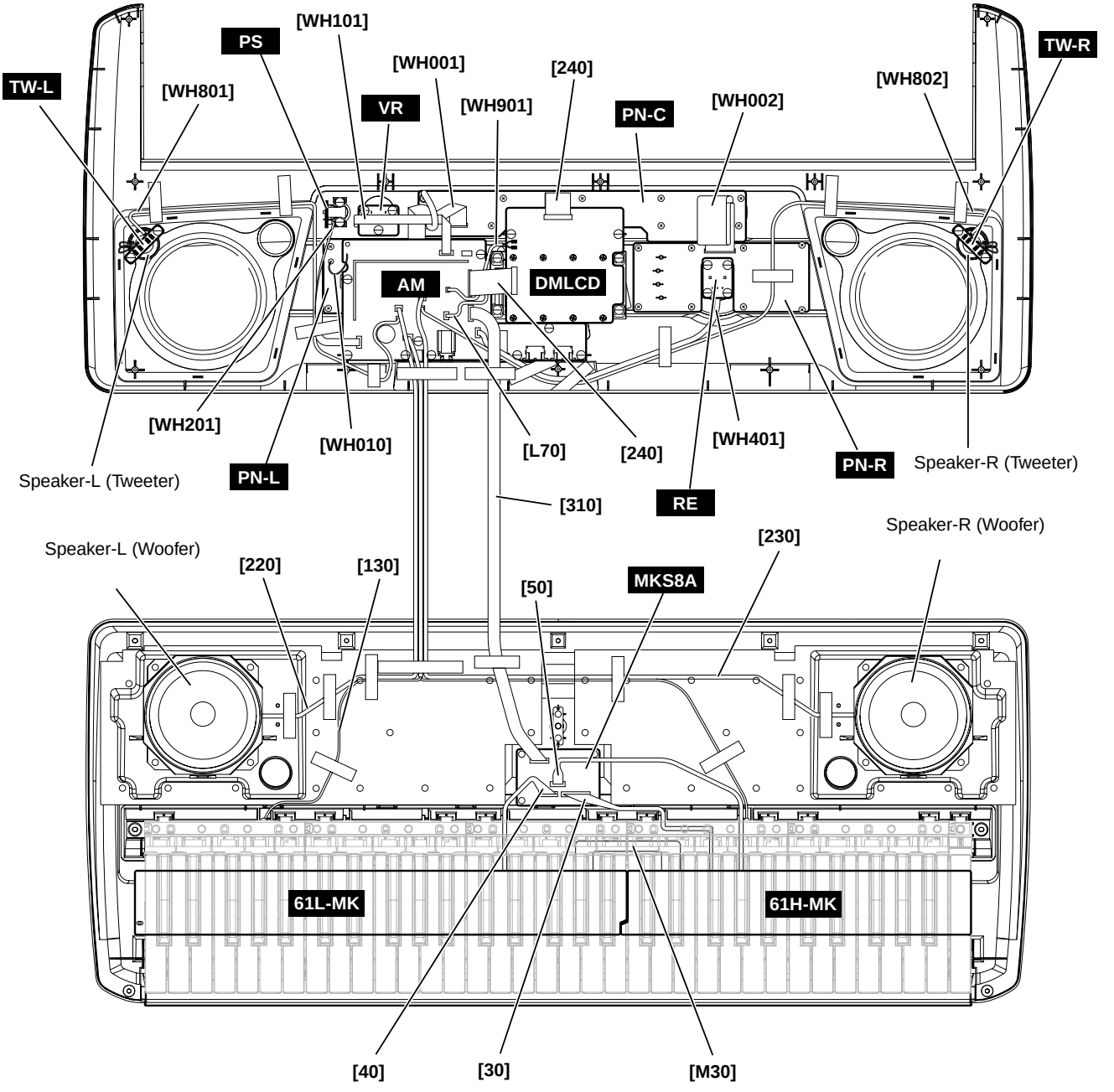

Location	Part No.	Connector Assembly	Destination				Remarks
30	- -	MK61-A	MKS8A-CN602	*1	61H-MK-CN1	*1	12P L=300 (V873900)
40	- -	MK61-B	MKS8A-CN603	*1	61L-MK-CN5	*1	7P L=200 (V873910)
50	- -	MK61-C	MKS8A-CN604	*1	61H-MK-CN2	*1	5P L=350 (V873920)
130	- -	BAT	AM-CN901	*2	Battery	*4	2P L=420 (V873560)
220	- -	SP-L	AM-CN803	*2	Speaker-L (Wo)	*4	2P (V873540)
230	- -	SP-R	AM-CN804	*2	Speaker-R (Wo)	*4	2P (V873550)
240	V9033600	Cable	DMLCD-CN501	*1	AM-CN705	*1	24P 70mm
240	V9033600	Cable	DMLCD-CN701	*1	PN-C-CN3	*1	24P 70mm
310	- -	MKS-AM	AM-CN704 *3	*1	MKS8A-CN601	*1	6P L=300 (V873510)
L70	- -	BL	AM-CN903	*1	Back light assembly	*5	2P (V873500)
M30	V8696200	16N-2M-C61	61H-MK-CN3	*1	61L-MK-CN4	*1	12P L=210
WH001	- -	PN-R	PN-R-CN1	*1	PN-C-CN2	*1	15P L=200 (V873430)
WH002	- -	PN-L	PN-L-CN5	*1	PN-C-CN4	*1	9P L=200 (V873440)
WH010	- -	GND	AM-TL		PN-L-TL		1P L=50 (V912250)
WH101	- -	VR	VR-CN101	*1	AM-CN701	*1	5P L=160 (V873450)
WH201	- -	PS	PS-CN201	*1	AM-CN902	*1	4P L=200 (V873490)
WH401	- -	RE	RE-CN401	*1	AM-CN703	*1	3P L=330 (V873460)
WH801	- -	TW-L	AM-CN801	*1	TW-L	*5	2P L=560 (V873470)
WH802	- -	TW-R	AM-CN802	*1	TW-R	*5	2P L=820 (V873480)
WH901	- -	+5D	AM-CN706	*1	DMLCD-TL9, 10	*6	2P L=120 (V873570)

* The parts with "–" in "**Part No.**" are not available as spare parts.
* 1 : Edge mark is adjusted to Pin 1 mark (△mark).
* 2 : Red wire is adjusted to Pin 1 mark (△mark).
* 3 : Be sure to make a correct match when connecting MKS8A(CN601) and AM(CN704).
  Connecting the connectors in the wrong way around may cause damage to the MKS8A circuit board.
*4 : Red wire is connected to (+) terminal. Black wire is connected to (-) terminal.
*5 : Pin 1 wire is connected to (+) terminal. Pin 2 wire is connected to (-) terminal.
*6 : Pin 1 wire is connected to (TL9) terminal. Pin 2 wire is connected to (TL10) terminal.

Caution: Be sure to attach the removed filament tape just as it was before removal.

■ DISASSEMBLE PROCEDURE

1. Lower Case Assembly

(Time required : About 3 min.)

1-1. Remove the battery cover assembly. (Fig. 1)

1-2. Remove the nine (9) screws marked [320] and the three (3) screws marked [330]. The lower case assembly can then be removed. (Fig. 1)

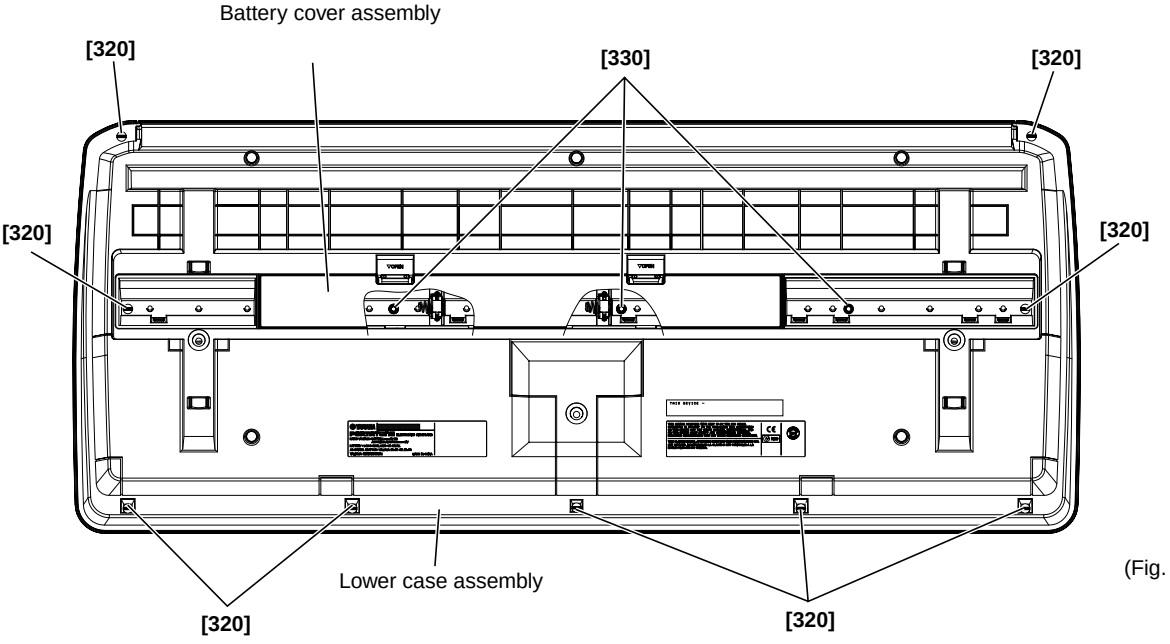

(Fig. 1)

[320]: Bind Head Tapping Screw-B 3.0 x 12 MFZN2Y (VE683000)
[330]: Bind Head Tapping Screw-B 3.0 x 30 MFZN2Y (V7213700)

2. Spring Terminal

(Time required : About 10 min.)

2-1. Remove the lower case assembly. (See procedure 1)

2-2. Remove the BATTERY connector assembly (red/black) soldered to the spring terminal (+)/(-). (Fig. 2)

2-3. Remove the spring terminal by releasing hooks (2 locations for each). (Fig. 3)

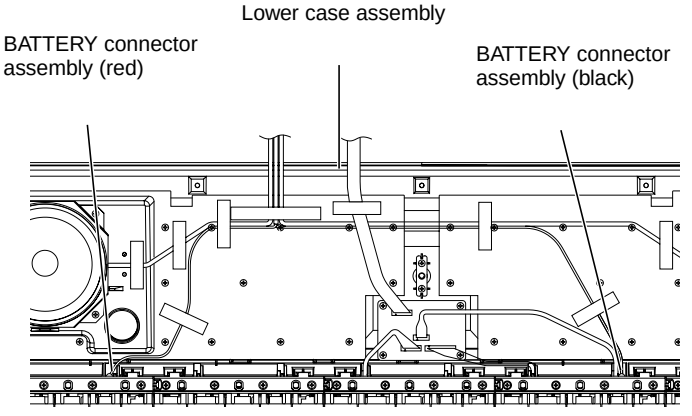

(Fig. 2)

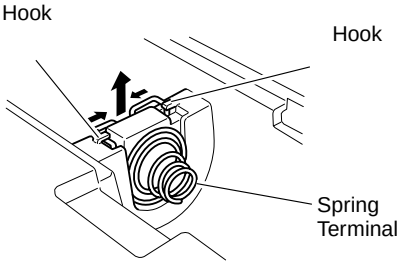

(Fig. 3)

3. AM Circuit Board

(Time required : About 8 min.)

3-1. Remove the lower case assembly. (See procedure 1)

3-2. Remove the nine (9) screws marked [210A]. The AM circuit board can then be removed. (Fig. 4)

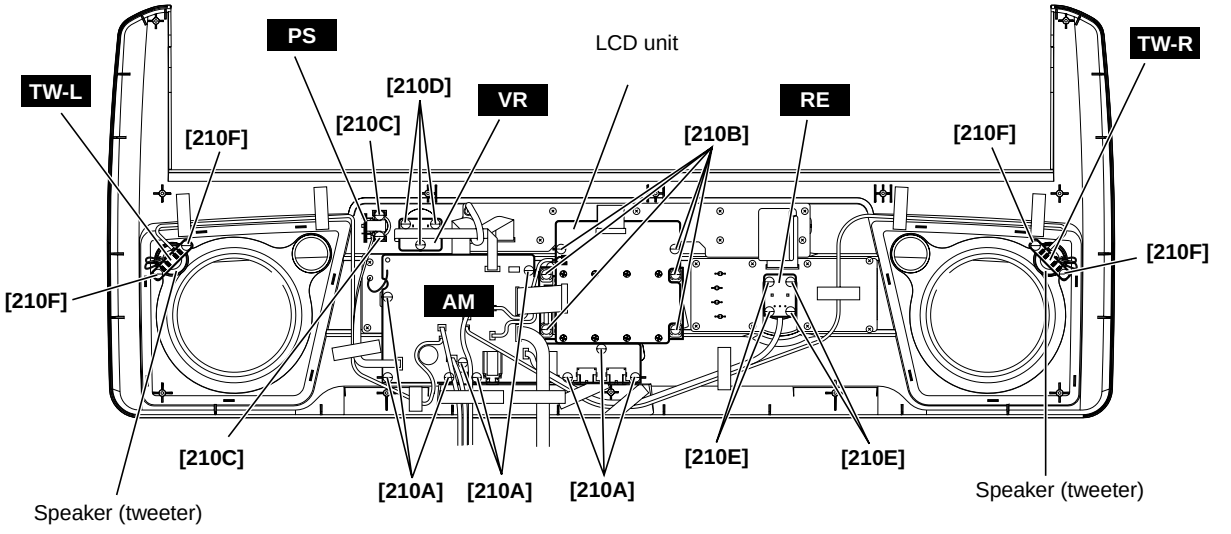

[210]: Bind Head Tapping Screw-B 3.0 x 8 MFZN2Y (EP600250)

(Fig. 4)

4. LCD Unit and DMLCD Circuit Board

(Time required : About 10 min.)

4-1. Remove the lower case assembly. (See procedure 1)

4-2. Remove the six (6) screws marked [210B]. The LCD unit can then be removed. (Fig. 4)

4-3. Remove the eight (8) screws marked [L50]. The DMLCD circuit board can then be removed from the LCD unit. (Fig. 4-1)

*** When you install the DMLCD circuit board, tighten the screws from No.1 to No. 8 in order as shown in Figure 4-1.**

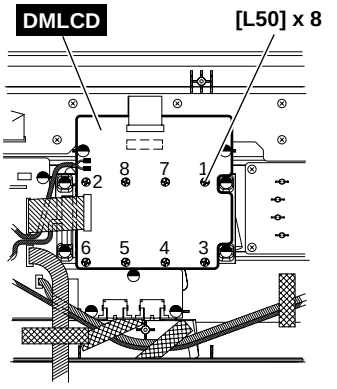

(Fig. 4-1)

[L50]: Bind Head Tapping Screw-P 3.0 x 12 MFZN2Y (EP600300)

5. PS Circuit Board

(Time required : About 8 min.)

5-1. Remove the lower case assembly. (See procedure 1)

5-2. Remove the two (2) screws marked [210C]. The PS circuit board can then be removed. (Fig. 4)

6. VR Circuit Board

(Time required : About 8 min.)

6-1. Remove the lower case assembly. (See procedure 1)

6-2. Remove the volume knob from the control panel side. (Fig. 5)

6-3. Remove the three (3) screws marked [210D]. The VR circuit board can then be removed. (Fig. 4)

7. RE Circuit Board

(Time required : About 8 min.)

7-1. Remove the lower case assembly. (See procedure 1)

7-2. Remove the encoder knob from the control panel side. (Fig. 5)

7-3. Remove the four (4) screws marked [210E]. The VR circuit board can then be removed. (Fig. 4)

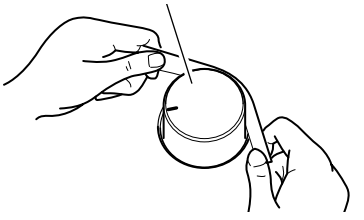

(Fig. 5)

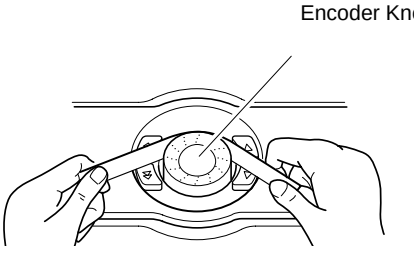

(Fig. 6)

8. TW Circuit Board, Speaker (tweeter)

(Time required : About 8 min.)

8-1. Remove the lower case assembly. (See procedure 1)

8-2. Remove the right and left TW circuit boards by removing two (2) screws marked [210F] from each speaker (tweeter). (Fig. 4)

8-3. Remove the right and left (tweeter) speakers. (Photo 1)

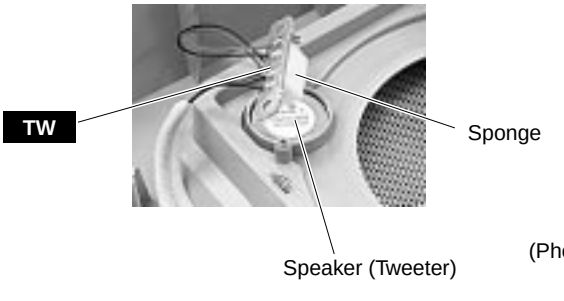

(Photo 1)

9. PN-R Circuit Board

(Time required : About 8 min.)

9-1. Remove the lower case assembly. (See procedure 1)

9-2. Remove the eight (8) screws marked [210G]. The PN-R circuit board can then be removed. (Fig. 7)

10. PN-L Circuit Board

(Time required : About 10 min.)

10-1. Remove the lower case assembly. (See procedure 1)

10-2. Remove the AM circuit board. (See procedure 3)

10-3. Remove the five (5) screws marked [210H]. The PN-L circuit board can then be removed. (Fig. 7)

11. PN-C Circuit Board

(Time required : About 10 min.)

11-1. Remove the lower case assembly. (See procedure 1)

11-2. Remove the LCD unit. (See procedure 4)

11-3. Remove the ten (10) screws marked [210I]. The PN-C circuit board can then be removed. (Fig. 7)

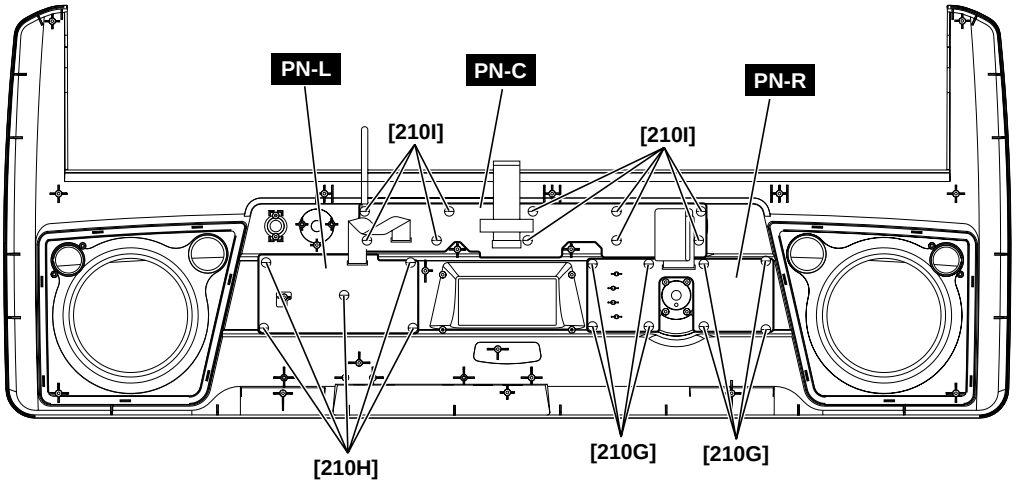

[210]: Bind Head Tapping Screw-B 3.0 x 8 MFZN2Y (EP600250)

(Fig. 7)

12. Speaker (woofer)

(Time required : About 8 min.)

12-1. Remove the lower case assembly. (See procedure 1)

12-2. Remove the right and left (woofer) speakers by removing four (4) screws marked [200A] from each speaker. (Fig. 8)

13. MKS8A Circuit Board

(Time required : About 8 min.)

13-1. Remove the lower case assembly. (See procedure 1)

13-2. Remove the four (4) screws marked [70]. The MKS8A circuit board can then be removed. (Fig. 8)

14. White key and Black key

(Time required : About 10 min. each)

14-1. Remove the lower case assembly. (See procedure 1)

14-2. Remove the four (4) screws marked [200B] fixing the black and white keys for one octave. The black and white keys of each octave can then be removed. (Fig. 8)
At this time, lift the back of black key with pushing the hooks of it and slide the black key towards you. (Photo 2)

14-3. When removing the C6 key, remove a screw marked [200C] and then lift the back of C6 key with pushing the hook of it and slide it towards you. (Fig. 8)

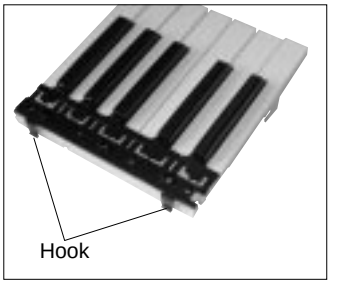

(Photo 2)

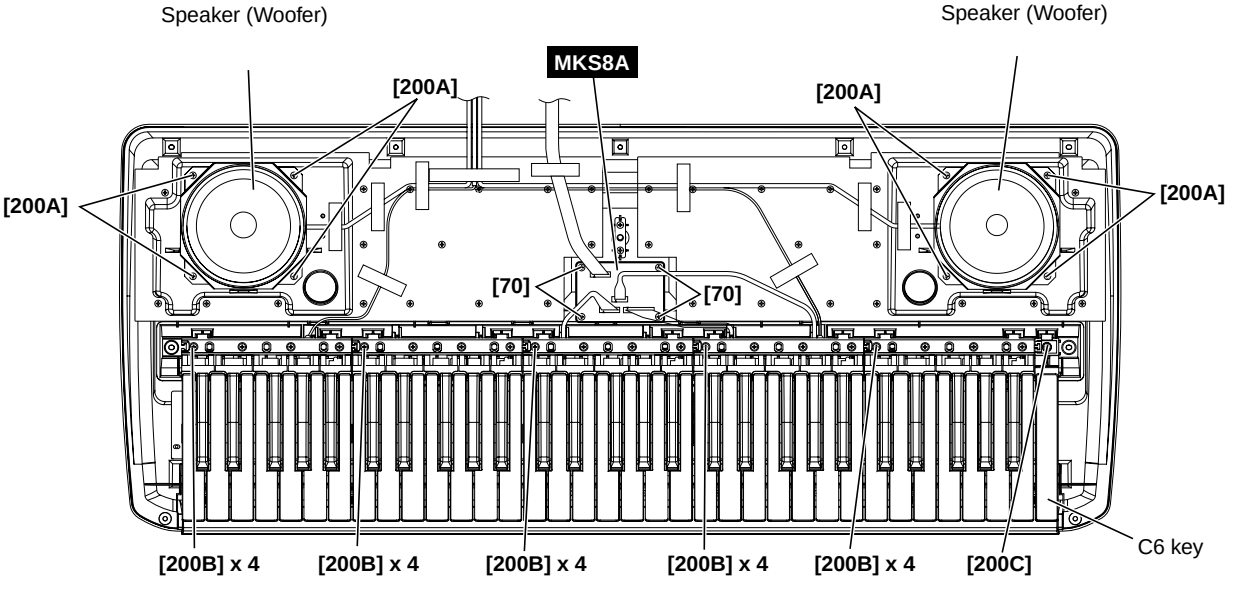

[70]: Bind Head Tapping Screw-B 3.0 x 8 MFZN2Y (EP600250)
[200A]: Bind Head Tapping Screw-B 4.0 x 10 MFZN2Y (EP640130)
[200B]: Bind Head Tapping Screw-P 3.0 x 20 MFZN2 (VT069800)
[200C]: Bind Head Tapping Screw-P 3.0 x 20 MFZN2 (VT069800)

(Fig. 8)

15. 61L-MK and 61H-MK Circuit Board

(Time required : About 15 min. each)

15-1. Remove the lower case assembly. (See procedure 1)

15-2. Remove the black and white keys (C1–B3). (See procedure 14.)
Remove the four (4) screws marked [180A] and the eight (8) screws marked [190A]. The 61L-MK circuit board can then be removed. (Fig. 9)

15-3. Remove the black and white keys (C4–C6). (See procedure 14.)
Remove the three (3) screws marked [180B] and the five (5) screws marked [190B]. The 61H-MK circuit board can then be removed. (Fig. 9-1)

*** When you install the 61L-MK circuit board, tighten the screws from No.1 to No. 12 in order as shown in Figure 9-1.**

*** When you install the 61H-MK circuit board, tighten the screws from No.1 to No. 8 in order as shown in Figure 9-1.**

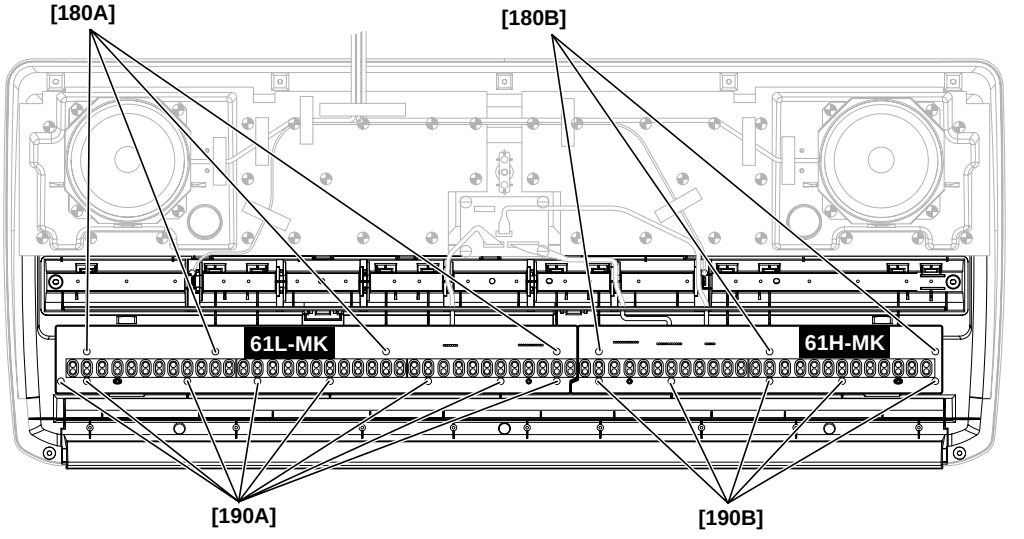

[180]: Bind Head Tapping Screw-B 3.0 x 8 MFZN2Y (EP600250)
[190]: Bind Head Tapping Screw-P SP 3.0 x 12 MFZNBL (VZ313100)

(Fig. 9)

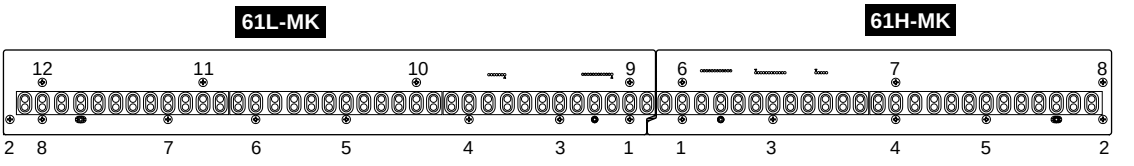

(Fig. 9-1)

■ LSI PIN DESCRIPTION

● **HG73C205AFD** (XU947C00) **SWX00B** (Tone Generator)

DMLCD: IC101

PIN NO.	NAME	I/O	FUNCTION	PIN NO.	NAME	I/O	FUNCTION
1	ICN	I	Initial clear	85	CMA3	O	Program address bus
2	RFCLKI	I	PLL Clock	86	CMA8	O	Program address bus
3	TM2	I	PLL Control	87	CMA2	O	Program address bus
4	AVDD_PLL		Power supply	88	CRD	O	read signal
5	AVSS_PLL		Ground	89	CMA1	O	Program address bus
6	MODE0	I	SWX dual mode	90	CUB	O	high byte effective signal
7	VCC7		Power supply	91	VCC91		Power supply
8	GND8		Ground	92	GHND92		Ground
9	XIN	I	crystal oscillator	93	CS1	O	CS signal
10	XOUT	O	crystal oscillator	94	CMA0	O	Program address bus
11	MODE1	I	SWX separate mode	95	CLB	O	low byte effective signal
12	TEST0	I	TEST pin	96	CMA12	O	Program address bus
13	TESTON	I	TEST pin	97	CMA11	O	Program address bus
14	AN0-P40	I	A/D converter	98	CMA10	O	Program address bus
15	AN1-P41	I	A/D converter	99	CMA9	O	Program address bus
16	AN2-P42	I	A/D converter	100	GND100		Ground
17	AN3-P43	I	A/D converter	101	CWE	O	write signal
18	AVDD_AN		Power supply	102	CMA16	O	Program address bus
19	AVSS_AN		Ground	103	CMA15	O	Program address bus
20	TXD0	O	for MIDI or TO-HOST	104	CMA14	O	Program address bus
21	TXD1	O	for MIDI	105	CMA13	O	Program address bus
22	EXCLK	I	Crystal oscillator	106	CMD8	I/O	Program memory Data bus
23	SMD11	I/O	Wave memory data bus	107	CMD7	I/O	Program memory Data bus
24	SMD4	I/O	Wave memory data bus	108	CMD9	I/O	Program memory Data bus
25	SMD3	I/O	Wave memory data bus	109	CMD6	I/O	Program memory Data bus
26	SMD12	I/O	Wave memory data bus	110	CMD10	I/O	Program memory Data bus
27	SMD10	I/O	Wave memory data bus	111	CMD5	I/O	Program memory Data bus
28	SMD5	I/O	Wave memory data bus	112	CMD11	I/O	Program memory Data bus
29	SMD2	I/O	Wave memory data bus	113	CMD4	I/O	Program memory Data bus
30	SMD13	I/O	Wave memory data bus	114	CMD12	I/O	Program memory Data bus
31	SMD9	I/O	Wave memory data bus	115	CMD3	I/O	Program memory Data bus
32	SMD6	I/O	Wave memory data bus	116	CMD13	I/O	Program memory Data bus
33	SMD1	I/O	Wave memory data bus	117	CMD2	I/O	Program memory Data bus
34	SMD14	I/O	Wave memory data bus	118	CMD14	I/O	Program memory Data bus
35	VCC35		Power supply	119	VCC119		Power supply
36	GND36		Ground	120	GND115		Ground
37	SMD8	I/O	Wave memory data bus	121	CMD1	I/O	Program memory Data bus
38	SMD7	I/O	Wave memory data bus	122	CMD15	I/O	Program memory Data bus
39	SMD0	I/O	Wave memory data bus	123	CMD0	I/O	Program memory Data bus
40	SMD15	I/O	Wave memory data bus	124	CMA21	O	Program address bus
41	SOE	O	read signal	125	PDT15	I/O	SWX access data bus
42	SWE	O	write signal	126	PDT14	I/O	SWX access data bus
43	SRAS	O	RAS signal	127	PDT13	I/O	SWX access data bus
44	SCAS	O	CAS signal	128	PDT12	I/O	SWX access data bus
45	REFRESH	O	REFRESH signal	129	PDT11	I/O	SWX access data bus
46	CS0	O	CS signal	130	PDT10	I/O	SWX access data bus
47	SMA0	O	Memory address bus	131	PDT9	I/O	SWX access data bus
48	SMA16	O	Memory address bus	132	PDT8	I/O	SWX access data bus
49	VCC49		Power supply	133	VCC133		Power supply
50	GND50		Ground	134	GND134		Ground
51	SMA1	O	Memory address bus	135	PDT7	I/O	SWX access data bus
52	SMA15	O	Memory address bus	136	PDT6	I/O	SWX access data bus
53	SMA2	O	Memory address bus	137	PDT5	I/O	SWX access data bus
54	SMA14	O	Memory address bus	138	PDT4	I/O	SWX access data bus
55	SMA3	O	Memory address bus	139	PDT3	I/O	SWX access data bus
56	SMA13	O	Memory address bus	140	PDT2	I/O	SWX access data bus
57	SMA4	O	Memory address bus	141	PDT1	I/O	SWX access data bus
58	SMA12	O	Memory address bus	142	PDT0	I/O	SWX access data bus
59	SMA5	O	Memory address bus	143	VCA143		Power supply
60	GND60		Ground	144	GND144		Ground
61	VCC61		Power supply	145	PAD2	I	SWX access address bus
62	SMA11	O	Memory address bus	146	PAD1	I	SWX access address bus
63	SMA6	O	Memory address bus	147	PAD0	I	SWX access address bus
64	SMA10	O	Memory address bus	148	VCC148		Power supply
65	SMA7	O	Memory address bus	149	GND149		Ground
66	SMA9	O	Memory address bus	150	PCS	I	Chip select
67	SMA17	O	Memory address bus	151	PWR	I	write enable
68	SMA8	O	Memory address bus	152	PRD	I	read enable
69	SMA18	O	Memory address bus	153	RXD0	I	for Midi or TO-HOST
70	SMA19	O	Memory address bus	154	RXD1	I	for Midi or Key scan
71	SMA20	O	Memory address bus	155	SCLKI	I	EXT Clock
72	SMA21	O	Memory address bus	156	ADIN	I	A/D converter
73	SMA22	O	Memory address bus	157	ADLR	O	A/D converter LR clock
74	SMA23	O	Memory address bus	158	DO0	O	DAC
75	CMA20	O	Program address bus	159	DO1	O	DAC
76	CMA19	O	Program address bus	160	SYSCLK	O	1/2 clock
77	VCC77		Power supply	161	VCC161		Power supply
78	GND78	O	Ground	162	GND162		Ground
79	CMA18	O	Program address bus	163	WCLK	O	for DAC LR clock
80	CMA17	O	Program address bus	164	QCLK	O	1/12 clock
81	CMA5	O	Program address bus	165	BCLK	O	IIS-DAC clock
82	CMA6	O	Program address bus	166	SYI	I	Synch signal
83	CMA4	O	Program address bus	167	IRQ0	I	Interrupt request
84	CMA7	O	Program address bus	168	NMI	I	Interrupt request

• μPD789022GB-A15-8E (XZ560100) CPU

MKS8A: IC601

PIN NO.	NAME	I/O	FUNCTION	PIN NO.	NAME	I/O	FUNCTION
1	P12	I/O	Port 1	23	P32/INTP2/CPT2	I/O	Port 3/External interrupt input/Capture edge input
2	P11	I/O		24	P31/INTP1	I/O	Port 3/External interrupt input
3	P10	I/O		25	P30/INTP0	I/O	
4	P47/KR7	I/O	Port 4/Key return signal detection input	26	P22/RXD/SI0	I/O	Port 2/Asynchronous serial interface serial data input/Serial interface serial data input
5	P46/KR6	I/O		27	P21/TXD/SO0	I/O	Port 2/Asynchronous serial interface serial data output/Serial interface serial data output
6	P45/KR5	I/O		28	P20/ASCK/SCK0	I/O	Port 2/Asynchronous serial interface serial clock input/Serial interface serial clock
7	P44/KR4	I/O		29	P07	I/O	Port 0
8	P43/KR3	I/O		30	P06	I/O	
9	P42/KR2	I/O		31	P05	I/O	
10	P41/KR1	I/O		32	P04	I/O	
11	P40/KR0	I/O		33	P03	I/O	
12	NC			34	P02	I/O	
13	IC		Internally connected (N.C.)	35	P01	I/O	
14	X2		Clock	36	P00	I/O	
15	X1	I		37	NC		
16	VSS0		Ground	38	VDD1		Power supply
17	VDD0		Power supply	39	VSS1		Ground
18	/RESET	I	System reset	40	P17	I/O	Port 1
19	P53	I/O	Port 5	41	P16	I/O	
20	P52	I/O		42	P15	I/O	
21	P51/TO2	I/O	Port 5/16-bit timer output	43	P14	I/O	
22	P50/TI0/TO0	I/O	Port 5/External count clock input to 8-bit timer/8-bit timer output	44	P13	I/O	

• ML9040A-B01GA (XZ987A00) LCD DRIVER

DMLCD: IC801

PIN NO.	NAME	I/O	FUNCTION	PIN NO.	NAME	I/O	FUNCTION
1	S22	O	Segment signal output for LCD driving	41	DB2	I/O	Data interface
2	S21	O		42	DB3	I/O	
3	S20	O		43	DB4	I/O	
4	S19	O		44	DB5	I/O	
5	S18	O		45	DB6	I/O	
6	S17	O		46	DB7	I/O	
7	S16	O		47	C1	O	Common signal output for LCD driving
8	S15	O		48	C2	O	
9	S14	O		49	C3	O	
10	S13	O		50	C4	O	
11	S12	O		51	C5	O	
12	S11	O		52	C6	O	
13	S10	O		53	C7	O	
14	S9	O		54	C8	O	
15	S8	O		55	C9	O	
16	S7	O		56	C10	O	
17	S6	O		57	C11	O	
18	S5	O		58	C12	O	
19	S4	O		59	C13	O	
20	S3	O		60	C14	O	
21	S2	O		61	C15	O	
22	S1	O		62	C16	O	
23	Vss		Ground	63	S40	O	Segment signal output for LCD driving
24	OSC1	I	Oscillator	64	S39	O	
25	OSC2	O	Oscillator	65	S38	O	
26	V1		Power supply	66	S37	O	
27	V2			67	S36	O	
28	V3			68	S35	O	
29	V4			69	S34	O	
30	V5			70	S33	O	
31	CLK1	O	Data latch clock	71	S32	O	
32	CLK2	O	Data shift clock	72	S31	O	
33	Vdd		Power supply (+5 V)	73	S30	O	
34	M	O	Altamated signal for LCD driver outout	74	S29	O	
35	D	O	Display data interface	75	S28	O	
36	RS	I		76	S27	O	
37	R/W	I	Read/write	77	S26	O	
38	E	I	Enable	78	S25	O	
39	DB0	I/O	Data interface	79	S24	O	
40	DB1	I/O	Data interface	80	S23	O	

■ IC BLOCK DIAGRAM

● **SN74HC273NSR** (XH223A00)
Octal D-Type Flir Flop
DMLCD: IC701

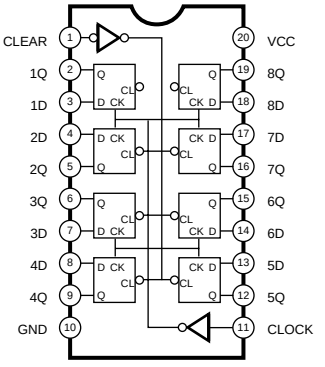

● **SN74AHCT1G08DCKR** (X0158A00)
Single 2-Input Positive-AND Gate
DMLCD: IC104

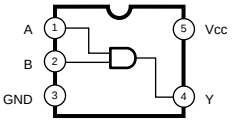

FUNCTION TABLE

INPUTS		OUTPUT
A	B	Y
H	H	H
L	X	L
X	L	L

● **µPD6379AGR** (XR998A00)
D/A Converter
DMLCD: IC501

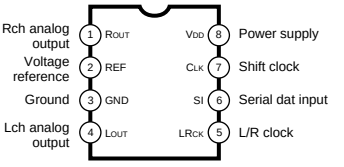

● **LA4705NA** (XQ619A00)
Power Amplifier
AM: IC801

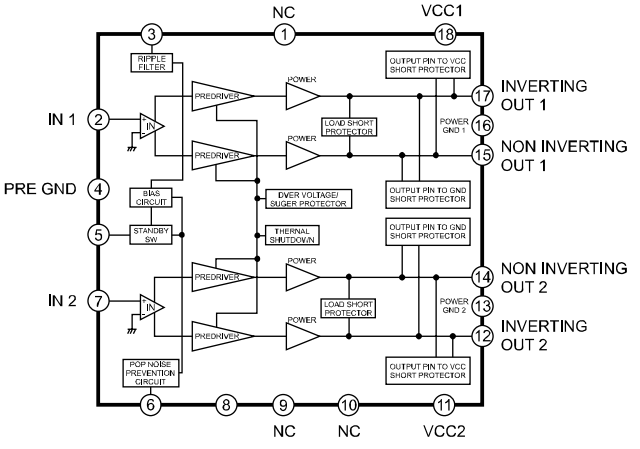

● **µPC4572G2-T1** (XF634A00)
Dual Operational Amplifier
DMLCD: IC502

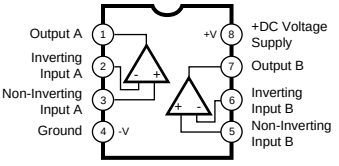

■ CIRCUIT BOARDS CONTENTS

61H-MK (X2335B0) 22
61L-MK (X2336A0) 22
AM (X2238C0) 19
DMLCD (X2235C0) 18
MKS8A (X2238C0) 21
RE (X2238C0) 18
PN-C (X2237C0) 21
PN-L (X2237C0) 20
PN-R (X2237C0) 20
PS (X2238C0) 18
TW-L (X2238C0) 20
TW-R (X2238C0) 20
VR (X2238C0) 21

Note : See parts list for details of circuit board conponent parts.

■ CIRCUIT BOARDS

● DMLCD Circuit Board

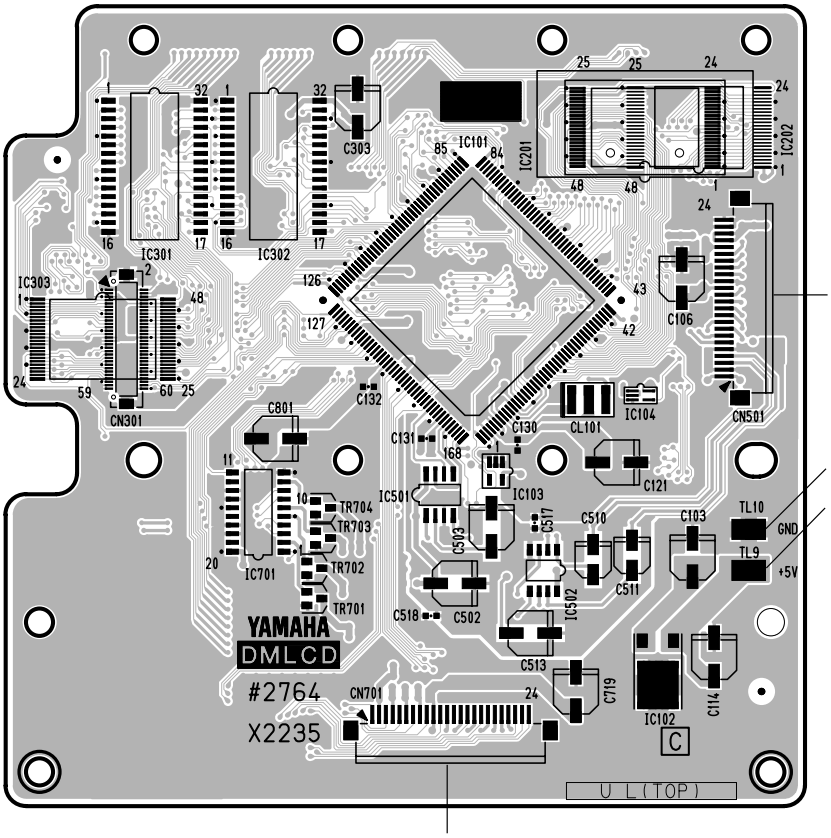

Component side

● RE Circuit Board

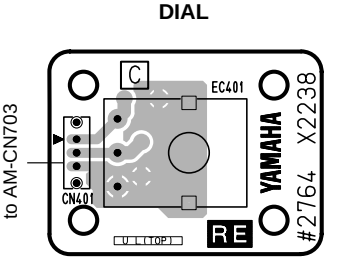

Component side

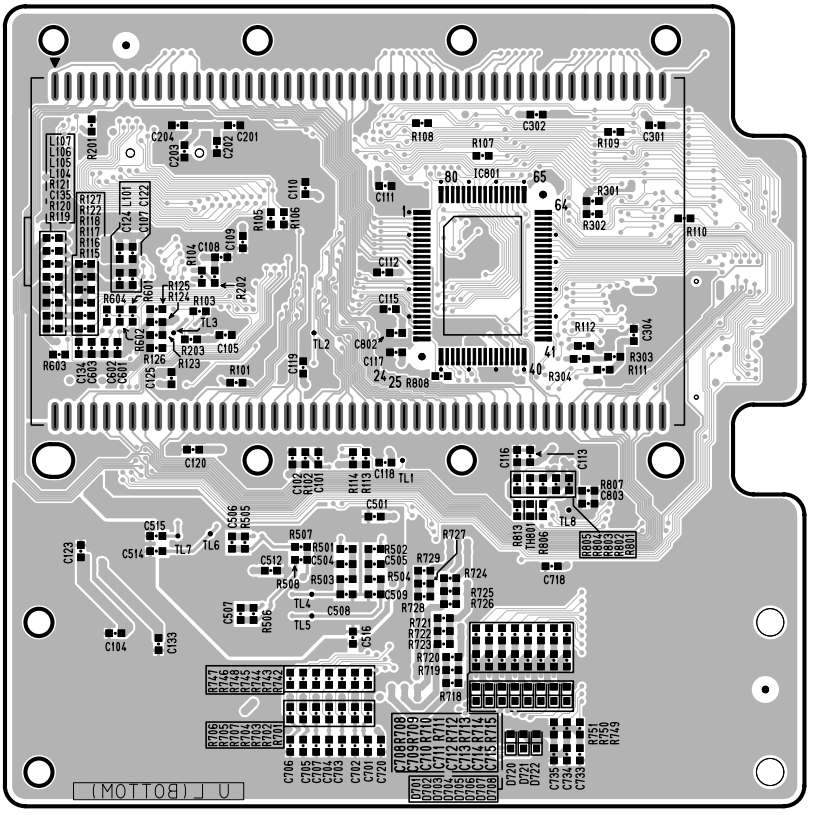

Pattern side

● PS Circuit Board

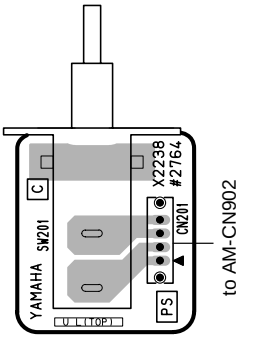

Component side

DMLCD: 2NA-V841710 ⚠1
RE, PS: 2NA-V841730 ⚠1

● AM Circuit Board

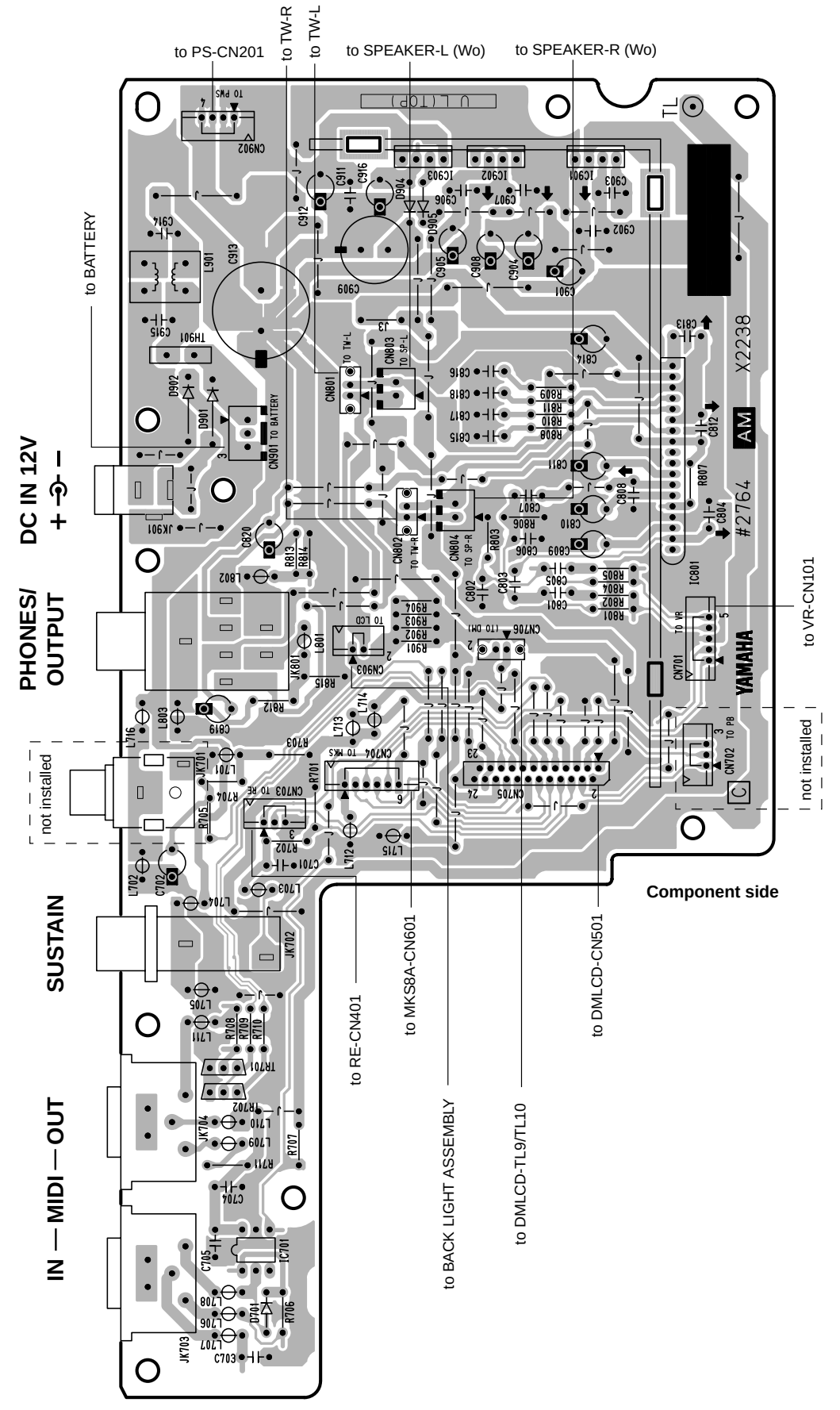

2NA-V841730 1

● PN-L Circuit Board

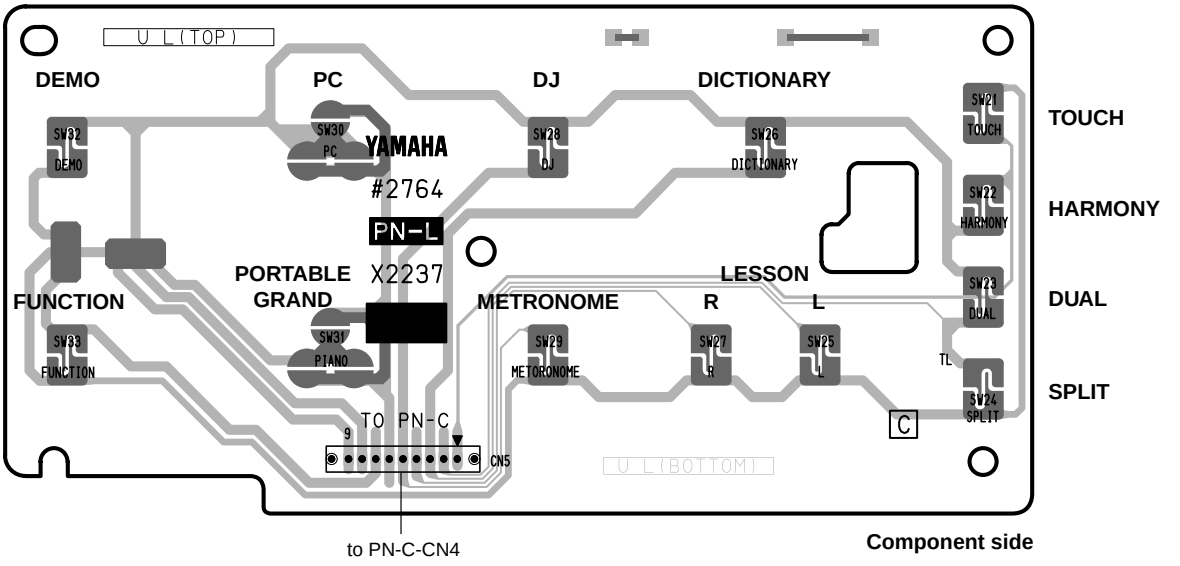

● PN-R Circuit Board

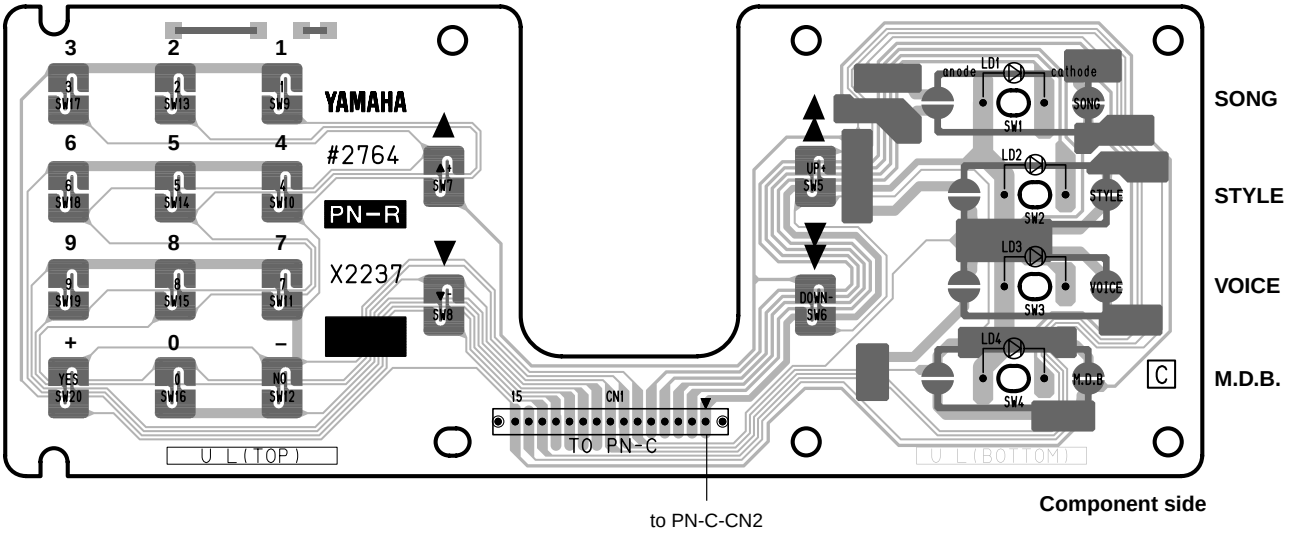

● TW-R Circuit Board

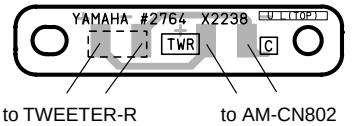

● TW-L Circuit Board

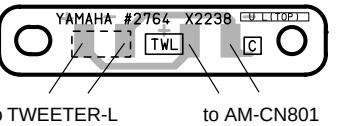

PN-L, PN-R: 2NA-V841720 (2)
TW-L, TW-R: 2NA-V841730 (1)

● PN-C Circuit Board

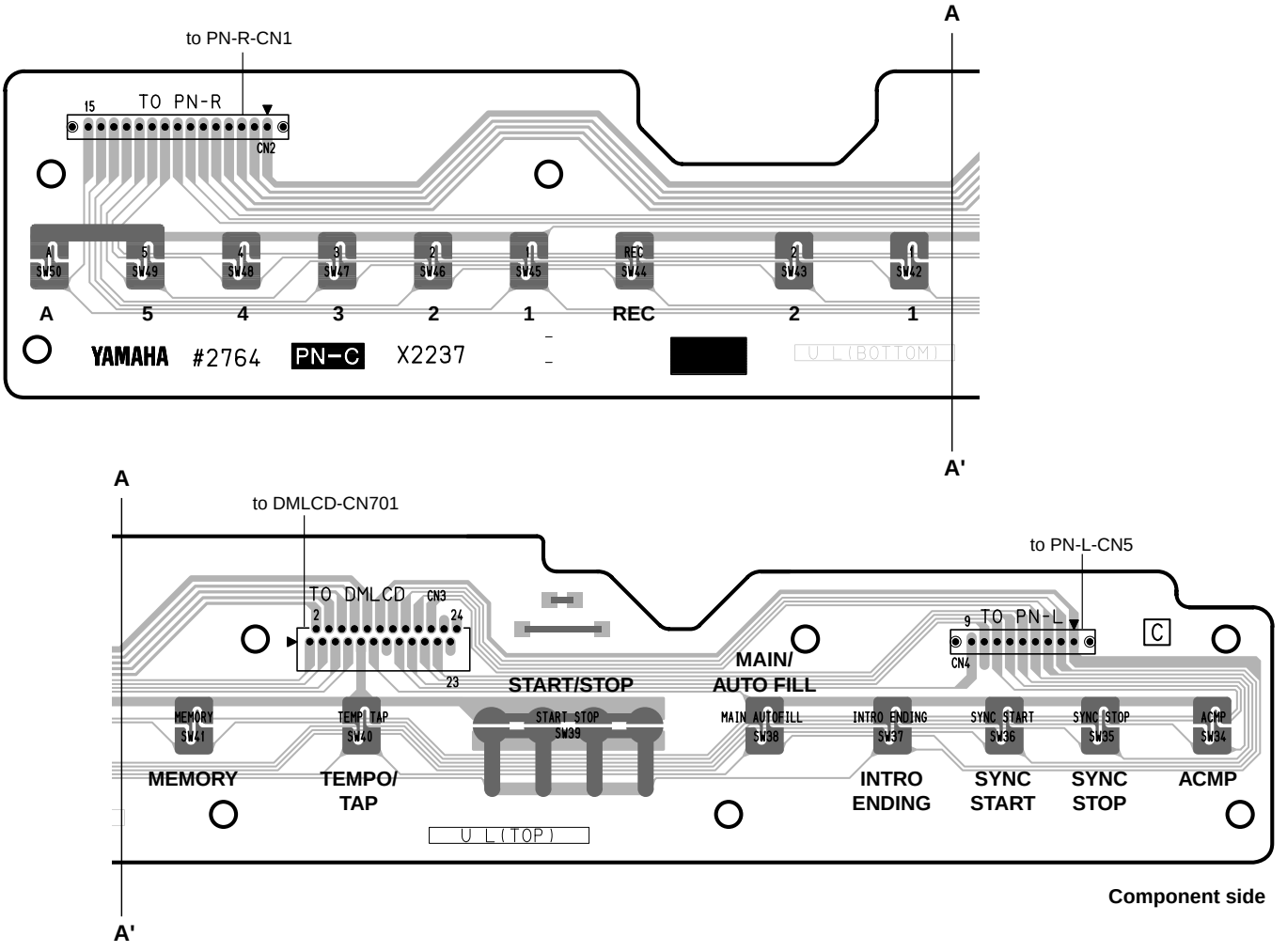

● VR Circuit Board

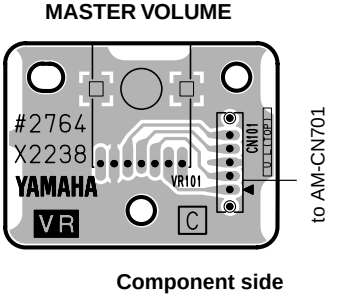

● MKS8A Circuit Board

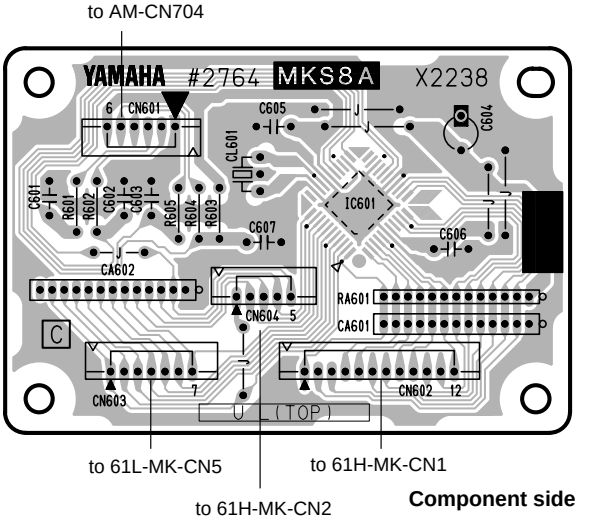

PN-C: 2NA-V841720 (2)
VR, MKS8A: 2NA-V841730 (1)

● 61H-MK Circuit Board

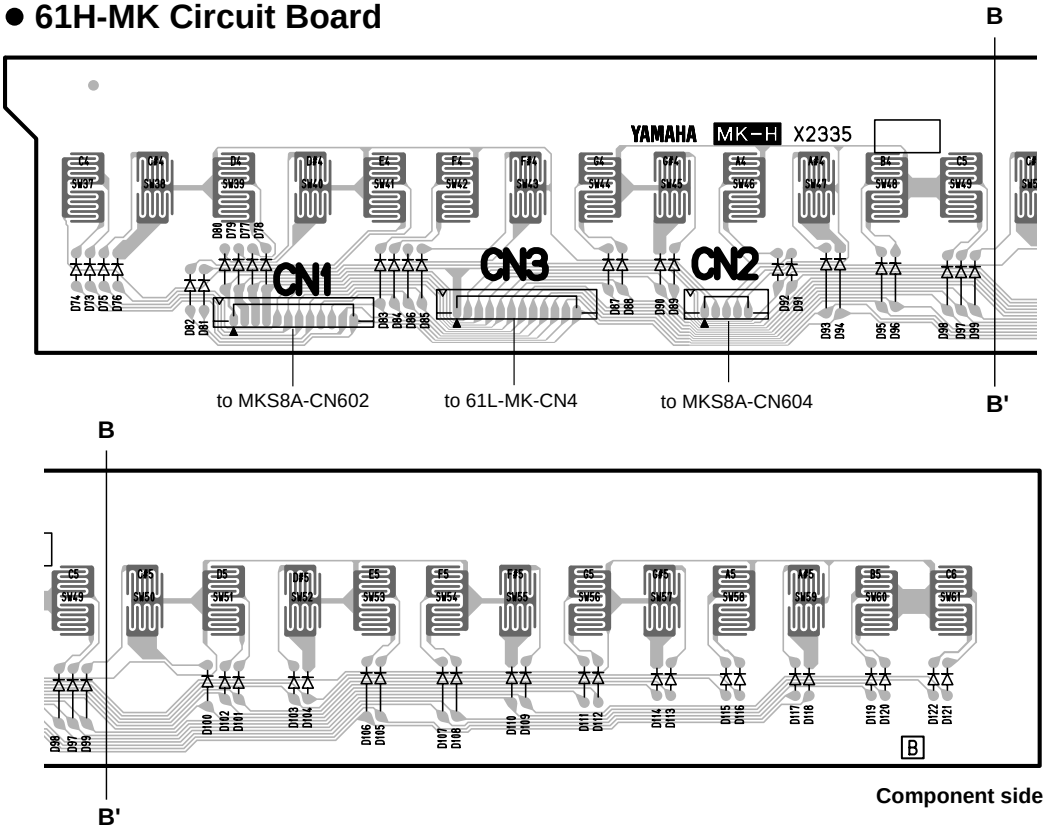

● 61L-MK Circuit Board

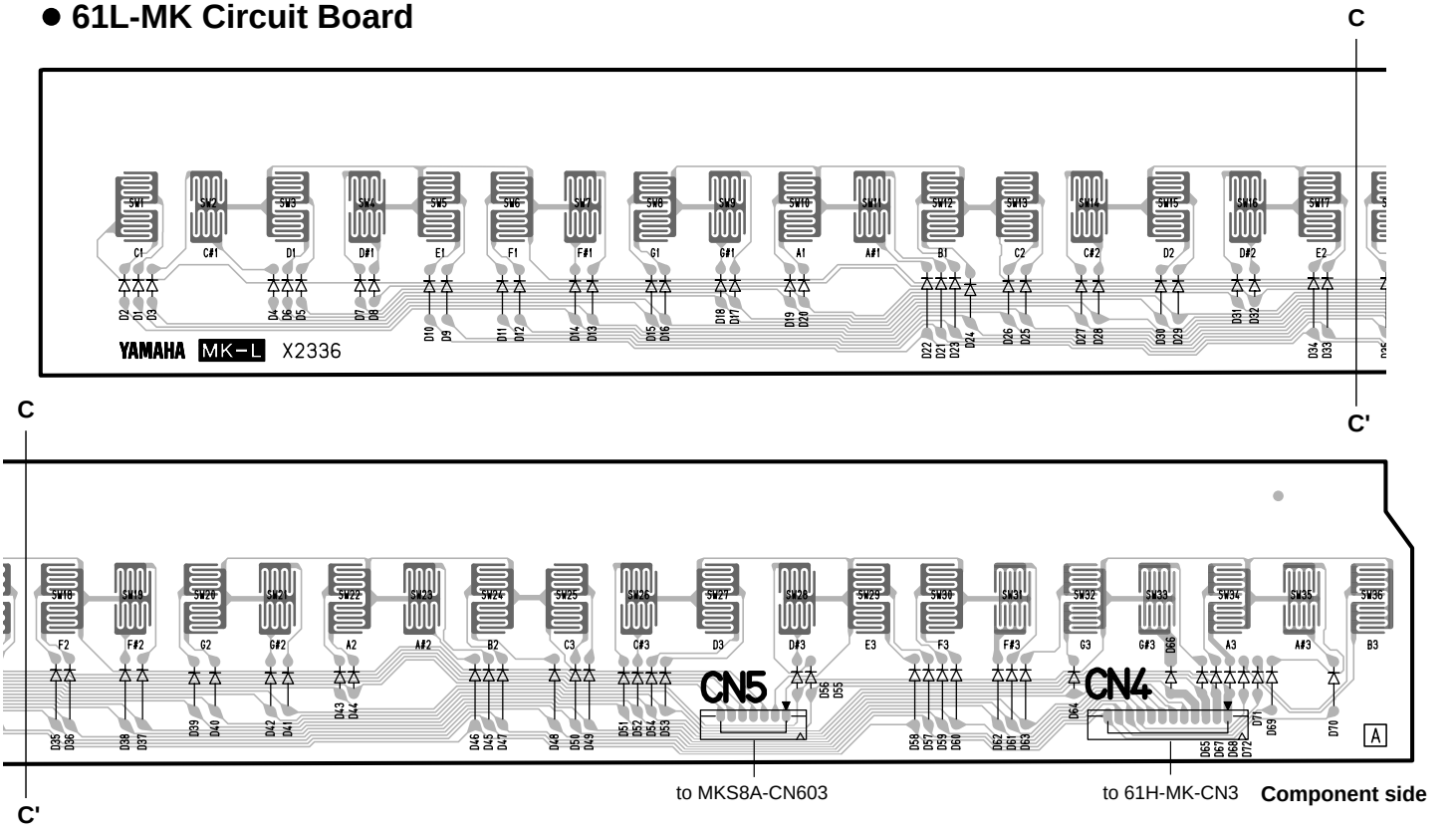

61H-MK: 2NAKB-V869540
61L-MK: 2NAKB-V869520

■ TEST PROGRAM

1. PREPARATION

1) PA-3C (AC adaptor) is used.
2) The volume is usually moved to the use position when no volume change is required.
3) Measuring instruments : frequency counter, level meter (with JIS-C filter)
   Note : Connect a stereo plug to the [PHONES/OUTPUT] jack at 33 ohms.
4) Jigs : foot switch, MIDI cable

2. HOW TO ENTER THE TEST PROGRAM

While pressing the C2#, F2 and G2# keys, turn the [STANDBY/ON] switch on.

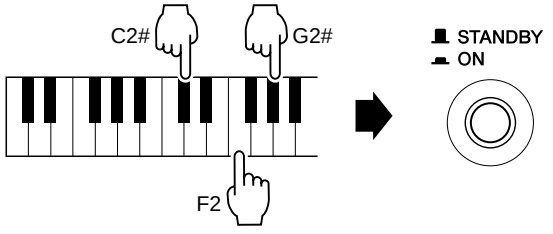

3. PROCEEDING THROUGH THE TEST PROGRAM

1) When the test program is started, “TEST” appears on the LCD.
2) Select the test program item to be executed by pressing the [-/NO] or [+/YES] button.
3) Press the [START/STOP] button to execute testing.

- When the test result is OK, press the [START/STOP] button to return to the test item name on display.
  Proceed to the next test by pressing the [-/NO] or [+/YES] button.
  When the test result is OK, a cursor (_) is added under the first character of the test item name on display.

- When the test result is NG, press the [DEMO] button or the lowest (leftmost) white key on the keyboard to return to the test item name on display and then turn off the [STANDBY/ON] switch to end the test program.

4. TEST PROGRAM LIST

TEST No.	LCD (initial)	Test Functions and Judgment Criteria
1	Version 001	Displays ROM version. ROM (Program) versions are displayed alternately on the LCD.
2	Rom Chk1 002	Checks the ROM. The test results appear on the LCD.
3	Ram Chk1 003	Checks the RAM. The test results appear on the LCD.
6	FRomChk1 006	Checks the Flash ROM. The test results appear on the LCD. It takes about 3 seconds.
11	TG1 Chk 011	Outputs the sine wave by changing the channels in sequence from C2 to G4. After auto-scaling is finished, “TG1 End” appears on the LCD and individual keys can be played. (If playing two or more keys simultaneously, the first pressed key has priority to make a sound.)
13	Pit Chk 013	Connect the frequency counter to the [PHONES] jack. Sets PAN to Center and produces a signal at 440 +/- 1.76 Hz Check that the correct signal is produced.
14	Output R 014	Connect the level meter (with a JIS-C filter) to the [PHONES] jack. (33 ohm load) Set the [MASTER VOLUME] at maximum and check the output level (1 kHz). **PHONES L :** less than - 50.0 dBm **PHONES R :** - 6.0 dBm +/- 2 dB
15	Output L 015	Connect the level meter (with a JIS-C filter) to the [PHONES] jack. (33 ohm load) Set the [MASTER VOLUME] at maximum and check the output level (1 kHz). **PHONES L :** - 6.0 dBm +/- 2 dB **PHONES R :** less than - 50.0 dBm
19	Noise 019	Connect the level meter (with a JIS-C filter) to the [PHONES] jack. (33 ohm load) Set the [MASTER VOLUME] at maximum. Check D/A converter noise. **PHONES L/R :** Less than - 80.0 dBm

TEST No.	LCD (initial)	Test Functions and Judgment Criteria
20	SW Chk 020	Check the switches on the panel. Press the switches on the LCD as instructed. A pre-assigned note is output when the switch is pressed (See table 1.). As the check result appears on the LCD when all the switches are pressed as instructed,. Check that OK is displayed. (Piano: PORTABLE GRAND, dIUP: Dial turned clockwise, dIDW: Dial turned counterclockwise) (To stop this check before reaching its end, press the lowest (leftmost) white key on the keyboard to return to the test item name on display.)
21	LED On 021	Check that all LEDs on the panel are on.
28	LCD On 028	Check that all LCD dots are on.
29	LCD Off 029	Check that all LCD dots are off.
31	PD1 Chk 031	Connect the foot switch (FC-4 or FC-5) to the [SUSTAIN] jack. Check that the C3 note is output when the [START/STOP] button is pressed while stepping the pedal and the C4 note is output when releasing the pedal. The sound stops when stepping the pedal again.
37	MIDI Chk 037	After connecting the [MIDI IN] jack and [MIDI OUT] jack with a MIDI cable, execute the test. Check that the C4 note is output and that the test results appear on the LCD.
41	Rom Chk2 041	Checks the ROM. The test results appear on the LCD. It takes about 25 seconds.
42	Ram Chk2 042	Checks the RAM. The test results appear on the LCD.
45	FRomChk2 045	Checks the Flash ROM. The test results appear on the LCD. It takes about 60 seconds.
47	Factory 047	All the RAMs are initialized and set to the factory preset data when executing this test.
48	TestExit 048	Exit from the test program after executing this test.

● TABLE 1

ORDER	SWITCH	LCD	NOTE
1	TOUCH	Touch	C2
2	HARMONY	Harmony	C#2
3	DUAL	Dual	D2
4	SPLIT	Split	D#2
5	DICTIONARY	Dict.	E2
6	DJ	DJ	F2
7	PC	PC	F#2
8	DEMO	Demo	G2
9	LESSON L	Lesson L	G#2
10	LESSON R	Lesson R	A2
11	METORONOME	Metro	A#2
12	PORTABLE GRAND	Piano	B2
13	FUNCTION	Function	C3
14	SONG	Song	C#3
15	STYLE	Style	D3
16	VOICE	Voice	D#3
17	M.D.B.	MDB	E3
18	CATEGORY +	Catego +	F3
19	CATEGORY -	Catego -	F#3
20	SELECT +	Select +	G3
21	SELECT -	Select -	G#3
22	(Tenkey) 1	Tenkey 1	A3
23	(Tenkey) 2	Tenkey 2	A#3
24	(Tenkey) 3	Tenkey 3	B3
25	(Tenkey) 4	Tenkey 4	C4
26	(Tenkey) 5	Tenkey 5	C#4
27	(Tenkey) 6	Tenkey 6	D4
28	(Tenkey) 7	Tenkey 7	D#4
29	(Tenkey) 8	Tenkey 8	E4
30	(Tenkey) 9	Tenkey 9	F4
31	(Tenkey) -	Tenkey -	F#4
32	(Tenkey) 0	Tenkey 0	G4
33	(Tenkey) +	Tenkey +	G#4
34	ACMP	ACMP	A4
35	SYNC STOP	S.Stop	A#4
36	SYNC START	S.Start	B4
37	INTRO/ENDING	Intro	C5
38	MAIN/AUTOFILL	Main/Fil	C#5
39	START/STOP	Str/Stp	D5
40	TEMPO/TAP	Temp/TAP	D#5
41	MEMORY	Memory	E5
42	OTS 1	OTS 1	F5
43	OTS 2	OTS 2	F#5
44	REC	REC	G5
45	SONG 1	Song 1	G#5
46	SONG 2	Song 2	A5
47	SONG 3	Song 3	A#5
48	SONG 4	Song 4	B5
49	SONG 5	Song 5	C6
50	SONG A	Song A	C#6
51	DIAL UP	dIUP	D6
52	DIAL DOWN	dIDW	D#6

■ DATA BACKUP

The following data can be stored to internal flash memory as data backup.

Group	Parameter
SONG	User Song Data
ONE TOUCH SETTING	One Touch Setting Data
PC	PC Memory
FUNCTION	Tuning Split Point Touch Sensitivity Style Volume Song Volume Metronome Volume Grade On/Off Demo & DJ Cancel
Touch	Touch On/Off

● About the Internal Flash Memory

The Song, One Touch Setting and PC parameters are automatically stored when each saving operation is done. Function and touch On/Off are stored when Pressing and Holding the Function button.

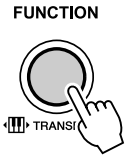

⚠ CAUTION

- Never attempt to turn the power off when a "WRITING!" message is shown in the display. Doing so can damage the internal flash memory and result in loss of data.

■ DATA INITIALIZATION

● All Data Initialization

All data can be initialized and restored to the factory preset condition by turning on the power while holding the highest (rightmost) white key and highest (rightmost) black key on the keyboard. "All Mem Clr" will appear briefly on the display.

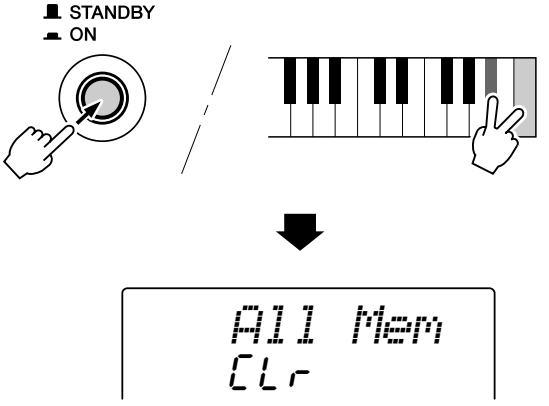

⚠ CAUTION

- All data listed above, plus loaded song data, will be erased and/or changed when the All Data Initialization procedure is carried out.
- Carrying out the data initialization procedure will usually restore normal operation if the PSR-290/PSR-292 freezes or begins to act erratically for any reason.

● Loaded Song Initializaion

You can erase only the loaded song data by turning on the power while holding the highest (rightmost) black key on the keyboard.

■ MIDI IMPLEMENTATION CHART

YAMAHA [Portable Keyboard] Date:25-Jan-2002
Model PSR-290 MIDI Implementation Chart Version : 1.0

Function...		Transmitted	Recognized	Remarks
Basic Channel	Default	1 - 16	1 - 16 *1	
	Changed	x	x	
Mode	Default	3	3	
	Messages	x	x	
	Altered	**********	x	
Note Number	: True voice	0 - 127 **********	0 - 127 0 - 127	
Velocity	Note ON	o 9nH,v=1-127	o 9nH,v=1-127	
	Note OFF	o 9nH,v=0	o 9nH,v=0 or 8nH	
After Touch	Key's	x	x	
	Ch's	x	x	
Pitch Bend		x	o	
Control Change	0,32	o	o	Bank Select
	1	x *2	o	Modulation wheel
	6	x	o	Data Entry(MSB)
	38	x	o	Data Entry(LSB)
	7	o	o	Part Volume
	10	o	o	Pan
	11	x *2	o	Expression
	64	o	o	Sustain
	71	x *2	o	Harmonic Content
	72	x *2	o	Release Time
	73	x *2	o	Attack Time
	74	x *2	o	Brightness
	84	x *2	o	Portamento Cntrl
	91,93,94	o	o	Effect Depth
	96,97	x	o	RPN Inc,Dec
	100,101	x *2	o	RPN LSB,MSB
Prog Change	: True #	o 0 - 127 **********	o 0 - 127	
System Exclusive		o *3	o *3	
Common	: Song Pos.	x	x	
	: Song Sel.	x	x	
	: Tune	x	x	
System Real Time	: Clock	o	o	
	: Commands	o *4	o *4	
Aux Mes- sages	:All Sound OFF	o	o(120,126,127)	
	:Reset All Cntrls	x	o(121)	
	:Local ON/OFF	x	o(122) *5	
	:All Notes OFF	x	o(123-125)	
	:Active Sense	o	o	
	:Reset	x	x	

Mode 1 : OMNI ON , POLY Mode 2 : OMNI ON ,MONO o : Yes
Mode 3 : OMNI OFF, POLY Mode 4 : OMNI OFF,MONO x : No

PORTATONE
PSR-290/PSR-292

PARTS LIST

CONTENTS

OVERALL ASSEMBLY 2
LOWER CASE ASSEMBLY 4
KEYBOARD ASSEMBLY 6
ELECTRICAL PARTS ..... 7 – 11

Notes : DESTINATION ABBREVIATIONS

A : Australian model	M : South African model
B : British model	O : Chinese model
C : Canadian model	Q : South-east Asia model
D : German model	T : Taiwan model
E : European model	U : U.S.A. model
F : French model	V : General export model (110V)
H : North European model	W: General export model (220V)
I : Indonesian model	N,X: General export model
J : Japanese model	Y : Export model

WARNING

Components having special characteristics are marked ⚠ and must be replaced with parts having specification equal to those originally installed.

- The numbers “QTY” show quantities for each unit.
- The parts with “--” in “**PART NO.**” are not available as spare parts.
- This mark “ } ” in the REMARKS column means these parts are interchangeable.
- The second letter of the shaded ( ) part number is O, not zero.
- The second letter of the shaded ( ) part number is I, not one.

OVERALL ASSEMBLY

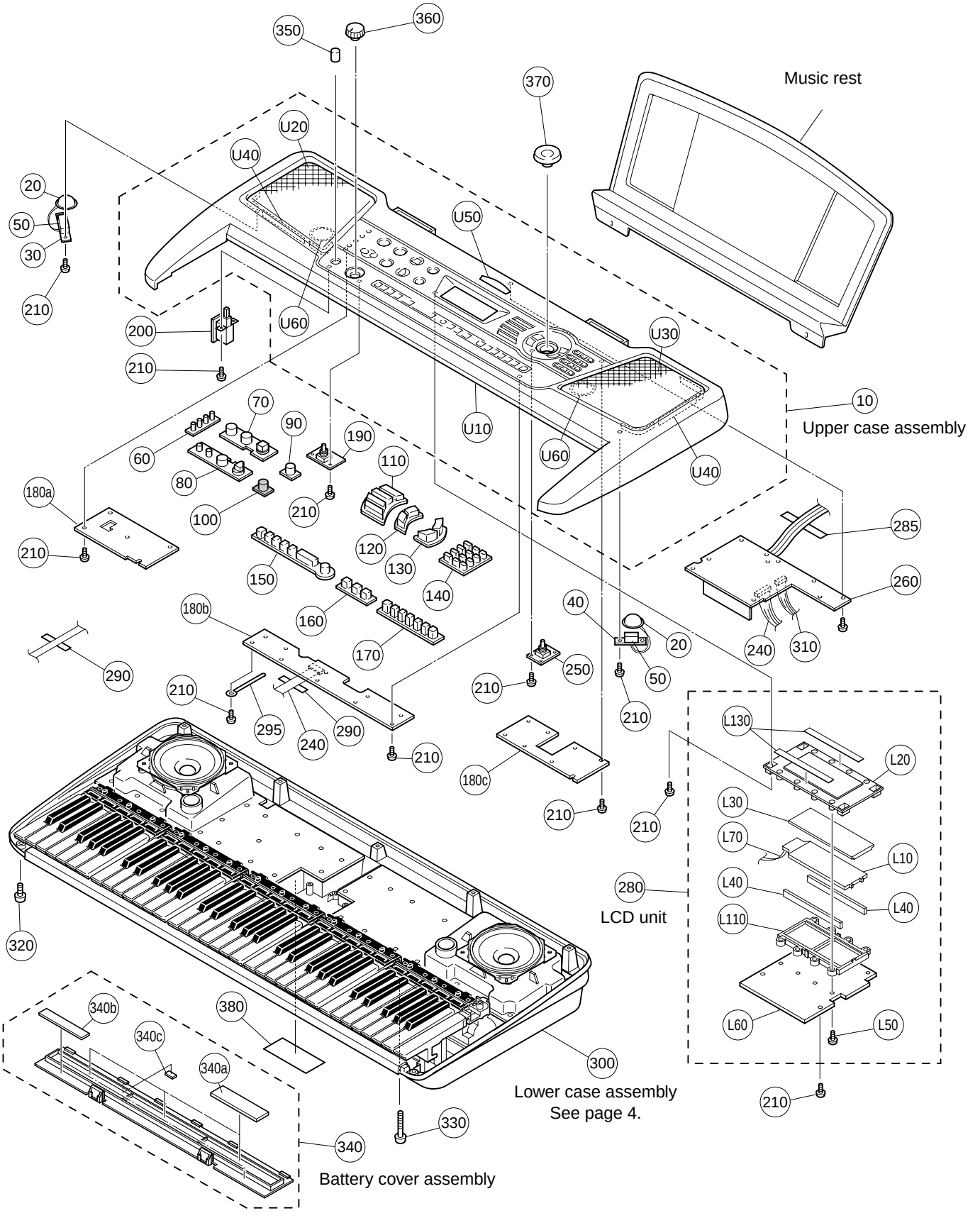

	REF NO.	PART NO.	DESCRIPTION			REMARKS	QTY	RANK
			OVERALL ASSEMBLY			PSR-290/PSR-292		
		--	Overall Assembly			PSR-290 (V850000)		
		--	Overall Assembly			PSR-292 (V835770)		
*	10	V8360300	Upper Case Assembly			PSR-290		
*	10	V8360400	Upper Case Assembly			PSR-292		
	20	X0159A00	Speaker	3.0cm		TWEETER	2	01
*	30	V8744500	Circuit Board	TW-L				
*	40	V8744600	Circuit Board	TW-R				
	50	--	Sponge	20X10X10		(V364550)	2	
*	60	V8333300	Panel Switch Gray	x4		TOUCH,HARMONY,DUAL,SPLIT		
*	70	V8333400	Panel Switch Blue	x3		Dict.,DJ,PC		
*	80	V8333500	Panel Switch Blue	x4		LESSON L/R,METRONOME, GRAND PIANO		
*	90	V8333600	Panel Switch Yellow	x1		DEMO		
*	100	V8333700	Panel Switch Gray	x1		TRANSPOSE		
*	110	V8850500	Panel Switch Blue	x4		SONG,STYLE,VOICE,M.D.B.		
*	120	V9962700	Panel Switch Gray	x2		>>,<<		
*	130	V9962800	Panel Switch Gray	x2		>,<		
*	140	V8850800	Panel Switch Gray	x12		0-9,-,+		
*	150	V8334100	Panel Switch Dark Gray	x7		SONG/STYLE(ACMP,...,TEMPO TAP)		
*	160	V8334200	Panel Switch Dark Gray	x3		ONE TOUCH SETTING (MEMORY, 1,2)		
*	170	V8334300	Panel Switch Dark Gray	x7		SONG MEMORY(REC,..,STYLE)		
	180	--	Circuit Board	PN		(V841720)		
*	180a	AAX34900	Circuit Board	PN-L		(V841720)		
*	180b	AAX34910	Circuit Board	PN-C		(V841720)		
*	180c	AAX34920	Circuit Board	PN-R		(V841720)		
*	190	V8744200	Circuit Board	VR				
*	200	V8744300	Circuit Board	PS				
	210	EP600250	Bind Head Tapping Screw-B	3.0X8 MFZN2Y			51	01
*	240	V9033600	Cable	24P 70mm P=1.0			2	
*	250	V8744100	Circuit Board	RE				
*	260	V8744000	Circuit Board	AM				
	280	--	LCD Unit	(I)		(V840350)		
	285	--	Adhesive Tape	12X90		(V591240)		
	290	VA126100	Adhesive Tape	12X50			13	03
	295	CB817510	Cord Binder	S-14B				03
	300	--	Lower Case Assembly			(V874320)		
	310	--	Connector Assembly	MKS-AM 6P L=300		(V873510)		
	320	VE683000	Bind Head Tapping Screw-B	3.0X12 MFZN2Y			9	01
	330	V7213700	Bind Head Tapping Screw-B	3.0X30 MFZN2Y			3	
*	340	V9259700	Battery Cover Assembly	PT				
	340a	--	Battery Cushion White			(V710060)	3	
	340b	--	Cushion	PE		(V796870)	2	
	340c	--	Nonwoven Fabric Cloth	15X3X0.5		(V925980)	6	
	340d	--	Cushion	PE 55X8X1		(WA10190)		
	350	VQ218800	Push Knob Red			STANDBY/ON		03
*	360	V8361300	Knob Gray			MASTER VOLUME		
*	370	V8866500	Encoder Knob Gray			DATA Dial		01
	380	--	Label	FE		PSR-290 (V836240)		
	380	--	Label	FE		PSR-292 (V836250)		
*		V8360300	Upper Case Assembly			PSR-290		
*		V8360400	Upper Case Assembly			PSR-292		
	U10	--	Upper Case			PSR-290 (V835930)		
	U10	--	Upper Case			PSR-292 (V835940)		
*	U20	V8601400	Speaker Grille L	LEFT				
*	U30	V8601500	Speaker Grille R	RIGHT				
	U40	--	Nonwoven Fabric Cloth	80X8X0.5 WHITE		(V874330)	14	
	U50	V7660600	Emblem	YAMAHA				
	U60	--	Cushion	ϕ 37X3.0		(V985410)		
		--	LCD Unit	(I)		(V840350)		
*	L10	V8804100	Back Light Assembly	E				
	L20	V5339100	LCD Panel	TYPE-B				01
*	L30	V8404400	LCD	RCD2185T				
	L40	V7838000	Rubber Connector	ZTT-410			2	03
	L50	EP600300	Bind Head Tapping Screw-P	3.0X12 MFZN2Y			8	01
*	L60	V8454700	Circuit Board	DMLCD				

*: New Parts

RANK: Japan only

	REF NO.	PART NO.	DESCRIPTION			REMARKS	QTY	RANK
	L70	--	Connector Assembly	BL 2P		(V873500)		
*	L110	**V8671300**	LCD Holder					
	L130	--	Nonwoven Fabric Cloth	0.5X95X8		(V706870)	2	
			ACCESSORIES					
*		**V8696800**	Music Rest					
*		**V8028600**	AC Adaptor	PA-3C J		PSR-290 J		06
		VY944300	AC Adaptor	PA-32 CH		PSR-290 O		10
*		**V8373900**	Japanese Guide Sheet			PSR-290 J		
*		**V8741600**	Chinese Guide Sheet			PSR-290 O		

*: New Parts RANK: Japan only

LOWER CASE ASSEMBLY

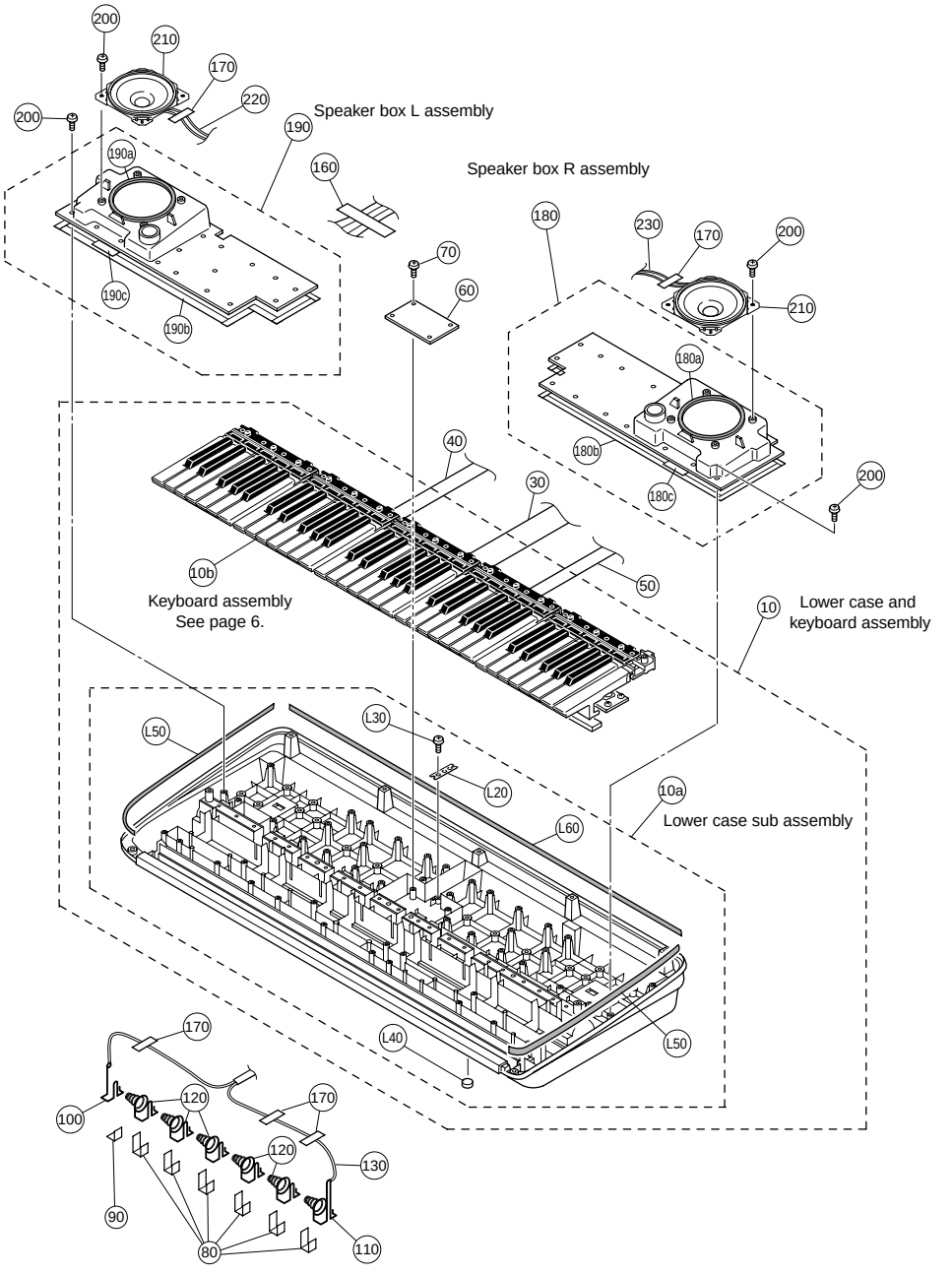

	REF NO.	PART NO.	DESCRIPTION			REMARKS	QTY	RANK
		--	LOWER CASE ASSEMBLY			PSR-290/PSR-292 (V874320)		
*	10	**AAX34890**	Lower Case and Keyboard A.					
*	10a	**V8749200**	Lower Case Sub Assembly					
	10b	--	Keyboard Assembly	16N-C61		(V869570)		
	30	--	Connector Assembly	MK61-A 12P L=300		(V873900)		
	40	--	Connector Assembly	MK61-B 7P L=200		(V873910)		
	50	--	Connector Assembly	MK61-C 5P L=350		(V873920)		
*	60	**V8744700**	Circuit Board	MKS8A				
	70	**EP600250**	Bind Head Tapping Screw-B	3.0X8 MFZN2Y			4	01
	80	--	Nonwoven Fabric Cloth	40X13X0.5		(V771130)	6	
	90	--	Nonwoven Fabric Cloth	13X13X0.5		(V771140)		
	100	**V7060500**	Spring Terminal	(+)				01
	110	**V7060700**	Spring Terminal	(-)				01
	120	**V7060200**	Spring Terminal	(-)			5	01
	130	--	Connector Assembly	BAT 2P XH3P RE/BL		(V873560)		
	160	--	Adhesive Tape	12X90		(V591240)		
	170	**VA126100**	Adhesive Tape	12X50			8	03
*	180	**V8749500**	Speaker Box R Assembly	RIGHT				
	180a	--	Packing	PE		(VZ16540)		
	180b	--	Cushion	1300X15X1.0 PE		(V901020)		
	180c	--	Cushion	60X15X1.0 PE		(V956150)		
*	190	**V8749400**	Speaker Box L Assembly	LEFT				
	190a	--	Packing	PE		(VZ16540)		
	190b	--	Cushion	1300X15X1.0 PE		(V901020)		
	190c	--	Cushion	60X15X1.0 PE		(V956150)		
	200	**EP640130**	Bind Head Tapping Screw-B	4.0X10 MFZN2Y			40	01
*	210	**X2549A00**	Speaker	12.0cm 4 ohm 8W		WOOFER	2	
	220	--	Connector Assembly	SP-L XH 2P RE/BL		(V873540)		
	230	--	Connector Assembly	SP-R XH 2P RE/BL		(V873550)		
*		**V8749200**	Lower Case Sub Assembly					
	L20	**VI104400**	Holder	CH			3	
	L30	**EP600250**	Bind Head Tapping Screw-B	3.0X8 MFZN2Y			6	01
	L40	**CB043750**	Foot Black	T1.6			5	01
	L50	--	Cushion	380X15X1.0 PE		(V881260)	2	
	L60	--	Cushion	885X15X1.0 PE		(V642110)		

*: New Parts

RANK: Japan only

KEYBOARD ASSEMBLY

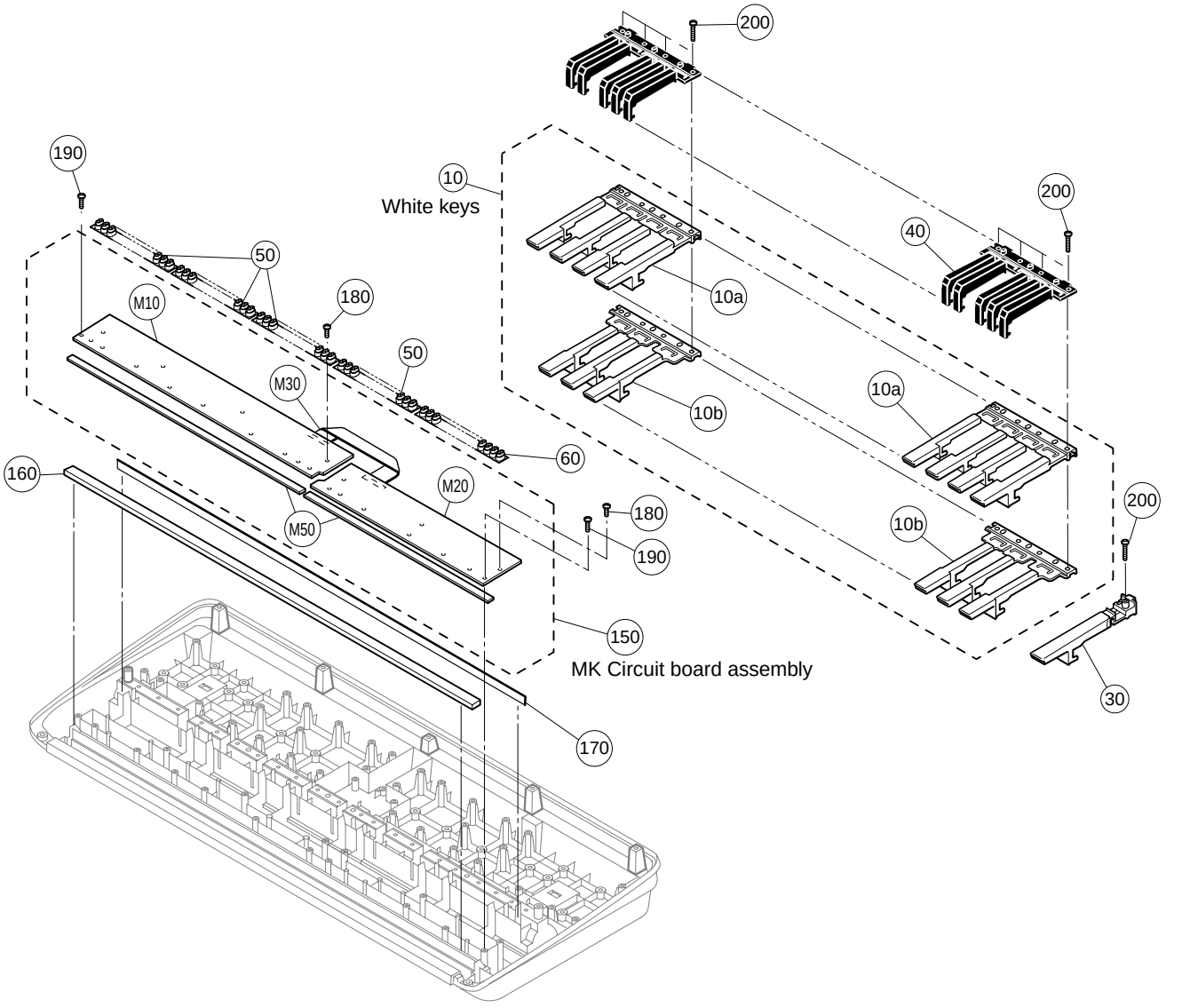

REF NO.	PART NO.	DESCRIPTION			REMARKS	QTY	RANK
	--	KEYBOARD ASSEMBLY	16N-C61		PSR-290PSR-/292 (V869570)		
10	--	White Keys	16N CEGBDFA		(AAX3601)	5	
10a	--	White Keys	16N CEGB		(V341260)	5	
10b	--	White Keys	16N DFA		(V341270)	5	
30	**V4760300**	White Key	16N C'				
40	**VZ271700**	Black Key	16N			5	
50	**V3413600**	Rubber Contact	16N-2M OCT 2M			4	
60	**V7477400**	Rubber Contact	16N-2M 13K 2M				
150	--	MK Circuit Board Assembly	MK 16N2M C61 P2		(V869560)		
160	**VZ303000**	Felt L	16N				
170	**V7100100**	Rubber Support	16N				
180	**EP600250**	Bind Head Tapping Screw-B	3.0X8 MFZN2Y			7	
190	**VZ313100**	Bind Head Tapping Screw-P	SP 3.0X12 MFZNBL			13	
200	**VT069800**	Bind Head Tapping Screw-P	3.0X20 MFZN2			21	
	--	MK Circuit Board Assembly	MK 16N2M C61 P2		(V869560)		
* M10	**V8695300**	Circuit Board	61L-MK 16N2M				
* M20	**V8695500**	Circuit Board	61H-MK 16N2M				
* M30	**V8696200**	Connector Assembly	16N-2M-C61 L=210				
M50	**VZ302900**	Felt U	16N				

*: New Parts

RANK: Japan only

ELECTRICAL PARTS

	REF NO.	PART NO.	DESCRIPTION			REMARKS	QTY	RANK
			ELECTRICAL PARTS			PSR-290/PSR-292		
*		**V8695500**	Circuit Board	61H-MK 16N2M		(X2335B0)		
*		**V8695300**	Circuit Board	61L-MK 16N2M		(X2336A0)		
*		**V8744000**	Circuit Board	AM		(V841730)(X2238C0)		
*		**V8744100**	Circuit Board	RE		(V841730)(X2238C0)		
*		**V8744700**	Circuit Board	MKS8A		(V841730)(X2238C0)		
*		**V8744300**	Circuit Board	PS		(V841730)(X2238C0)		
*		**V8744500**	Circuit Board	TW-L		(V841730)(X2238C0)		
*		**V8744600**	Circuit Board	TW-R		(V841730)(X2238C0)		
*		**V8744200**	Circuit Board	VR		(V841730)(X2238C0)		
*		**V8454700**	Circuit Board	DMLCD		(X2235C0)		
*		**AAX34900**	Circuit Board	PN-L		(V841720)(X2237C0)		
*		**AAX34910**	Circuit Board	PN-C		(V841720)(X2237C0)		
*		**AAX34920**	Circuit Board	PN-R		(V841720)(X2237C0)		
*		**V8695500**	Circuit Board	61H-MK 16N2M		(X2335B0)		
	10	**VQ769500**	Masking Tape	#2901 W=15				
	CN01	**VK025600**	Wire Trap	52147 12P TE				01
	CN02	**VK024900**	Wire Trap	52147 5P TE				01
	CN03	**VK025600**	Wire Trap	52147 12P TE				01
	D073	**VV437800**	Diode	1N4148(DO-34)				01
	-122	**VV437800**	Diode	1N4148(DO-34)				01
*		**V8695300**	Circuit Board	61L-MK 16N2M		(X2336A0)		
	10	**VQ769500**	Masking Tape	#2901 W=15				
	CN04	**VK025600**	Wire Trap	52147 12P TE				01
	CN05	**VK025100**	Wire Trap	52147 7P TE				01
	D001	**VV437800**	Diode	1N4148(DO-34)				01
	-072	**VV437800**	Diode	1N4148(DO-34)				01
*		**V8744000**	Circuit Board	AM		(V841730)(X2238C0)		
*		**V8744100**	Circuit Board	RE		(V841730)(X2238C0)		
*		**V8744700**	Circuit Board	MKS8A		(V841730)(X2238C0)		
*		**V8744300**	Circuit Board	PS		(V841730)(X2238C0)		
*		**V8744500**	Circuit Board	TW-L		(V841730)(X2238C0)		
*		**V8744600**	Circuit Board	TW-R		(V841730)(X2238C0)		
*		**V8744200**	Circuit Board	VR		(V841730)(X2238C0)		
		EP600190	Bind Head Tapping Screw-B	3.0X8 MFZN2BL			4	01
		--	Silicon Grease	X-113A G746		(VA79810)		
		--	Jumper Wire	0.55		(VA07890)		
	C0604	**UR828100**	Electrolytic Cap.	100.00 10.0V				01
	C0605	**VC694800**	Semiconductive Cera. Cap.	0.1000 25V Z				01
	C0606	**VC694800**	Semiconductive Cera. Cap.	0.1000 25V Z				01
	C0701	**FG613100**	Ceramic Capacitor-B	1000P 50V K				01
	C0703	**VC694800**	Semiconductive Cera. Cap.	0.1000 25V Z				01
	-0705	**VC694800**	Semiconductive Cera. Cap.	0.1000 25V Z				01
	C0802	**UA353100**	Mylar Capacitor	1000P 50V J				01
	C0803	**VE327200**	Monolithic Mylar Capacitor	1.0 50V J				02
	C0804	**UA352470**	Mylar Capacitor	470P 50V J				01
	C0806	**UA353100**	Mylar Capacitor	1000P 50V J				01
	C0807	**VE327200**	Monolithic Mylar Capacitor	1.0 50V J				02
	C0808	**UA352470**	Mylar Capacitor	470P 50V J				01
	C0809	**UR828100**	Electrolytic Cap.	100.00 10.0V				01
	C0810	**UR827330**	Electrolytic Cap.	33.00 10.0V				01
	C0811	**UR867100**	Electrolytic Cap.	10.00 50.0V				01
	C0812	**VC694800**	Semiconductive Cera. Cap.	0.1000 25V Z				01
	C0813	**VC694800**	Semiconductive Cera. Cap.	0.1000 25V Z				01
	C0814	**UR867100**	Electrolytic Cap.	10.00 50.0V				01
	C0815	**UA654470**	Mylar Capacitor	0.0470 50V J				01
	-0818	**UA654470**	Mylar Capacitor	0.0470 50V J				01
	C0819	**UR837470**	Electrolytic Cap.	47.00 16.0V				01
	C0820	**UR837470**	Electrolytic Cap.	47.00 16.0V				01
	C0901	**UR867100**	Electrolytic Cap.	10.00 50.0V				01
	C0902	**VC694800**	Semiconductive Cera. Cap.	0.1000 25V Z				01
	C0903	**VC694800**	Semiconductive Cera. Cap.	0.1000 25V Z				01
	C0904	**UR867100**	Electrolytic Cap.	10.00 50.0V				01
	C0905	**UR867100**	Electrolytic Cap.	10.00 50.0V				01
	C0906	**VC694800**	Semiconductive Cera. Cap.	0.1000 25V Z				01
	C0907	**VC694800**	Semiconductive Cera. Cap.	0.1000 25V Z				01
	C0908	**UR867100**	Electrolytic Cap.	10.00 50.0V				01

*: New Parts

RANK: Japan only

	REF NO.	PART NO.	DESCRIPTION			REMARKS	QTY	RANK
	C0913	**VK373000**	Electrolytic Cap.	4700 25.0V				03
	C0914	**UA654470**	Mylar Capacitor	0.0470 50V J				01
	C0915	**UA654470**	Mylar Capacitor	0.0470 50V J				01
	CA602	**VP755200**	Ceramic Capacitor Array	100P 50V K				02
	CL601	**V6781400**	Ceramic Resonator	5.00M EF0EC5004T4Q				01
	CN101	**VI878300**	Cable Holder	51048 5P TE				01
	CN201	**VI878200**	Cable Holder	51048 4P TE				01
	CN401	**VI878100**	Cable Holder	51048 3P TE				01
	CN601	**VF728300**	Wire Trap	52147 6P TE				01
	CN602	**VK025600**	Wire Trap	52147 12P TE				01
	CN603	**VK025100**	Wire Trap	52147 7P TE				01
	CN604	**VK024900**	Wire Trap	52147 5P TE				01
	CN701	**VK024900**	Wire Trap	52147 5P TE				01
	CN703	**VK024700**	Wire Trap	52147 3P TE				01
	CN704	**VF728300**	Wire Trap	52147 6P TE				01
	CN705	**VZ479500**	Connector, FFC	52806 24P TE				01
	CN706	**VI878000**	Cable Holder	51048 2P TE				01
	CN801	**VI878000**	Cable Holder	51048 2P TE				01
	CN802	**VI878000**	Cable Holder	51048 2P TE				01
	CN803	**LB918020**	Base Post Connector	XH 2P TE				01
	CN804	**LB918020**	Base Post Connector	XH 2P TE				01
	CN901	**LB918030**	Base Post Connector	XH 3P TE				01
	CN902	**VK024800**	Wire Trap	52147 4P TE				01
	CN903	**VK024600**	Wire Trap	52147 2P TE				01
	D0701	**VB941200**	Diode	1SS133,1SS176				01
⚠	D0901	**VL723600**	Diode	20E1-FC4		}		01
⚠	D0901	**VV731400**	Diode	2A02M		}		01
⚠	D0902	**VL723600**	Diode	20E1-FC4		}		01
⚠	D0902	**VV731400**	Diode	2A02M		}		01
	EC401	**VU481300**	Encoder	REB161 PVB 15F		DATA Dial		03
	HS001	**--**	Heat Sink			(V862490)		
	IC601	**XZ560100**	IC	UPD789022GB-A15-8E		CPU		04
	IC701	**VG181900**	Photo Coupler	PC-900V				03
	IC801	**XQ619A00**	IC	LA4705NA 17W BTL		POWER AMP. 17W		05
	IC901	**XU814A00**	IC	PQ05RD11 +5V 1.0A		REGULATOR +5V 1.0A		03
	IC902	**XU814A00**	IC	PQ05RD11 +5V 1.0A		REGULATOR +5V 1.0A		03
	J0003	**--**	Jumper Wire	0.55		(VA07890)		
	J0004	**--**	Jumper Wire	0.55		(VA07890)		
	JK702	**VC687500**	Phone Jack Black	YKB21-5014		SUSTAIN		01
	JK703	**VJ107200**	DIN Connector	5P YKF51-5050		MIDI IN		01
	JK704	**VJ107200**	DIN Connector	5P YKF51-5050		MIDI OUT		01
	JK801	**LB101870**	Phone Jack	YKB21-5006		PHONES/OUTPUT		03
⚠	JK901	**LB302260**	Connector	HEC0470-01-630		} DC IN 12V		02
⚠	JK901	**V6557600**	Connector	HTJ-020-05AZ		}		04
	L0703	**VB835000**	Coil	FL5R200QNT 20uH				01
	-0711	**VB835000**	Coil	FL5R200QNT 20uH				01
	L0713	**VB835000**	Coil	FL5R200QNT 20uH				01
	-0715	**VB835000**	Coil	FL5R200QNT 20uH				01
	L0801	**VB835000**	Coil	FL5R200QNT 20uH				01
	-0803	**VB835000**	Coil	FL5R200QNT 20uH				01
⚠	L0901	**VQ884000**	Line Filter	CM08RB01				03
	R0601	**HF756470**	Carbon Resistor	4.7K 1/4 J				01
	R0602	**HF756470**	Carbon Resistor	4.7K 1/4 J				01
	R0603	**HF757470**	Carbon Resistor	47.0K 1/4 J				01
	R0604	**HF755220**	Carbon Resistor	220.0 1/4 J				01
	R0605	**HF756100**	Carbon Resistor	1.0K 1/4 J				01
	R0701	**HF757470**	Carbon Resistor	47.0K 1/4 J				01
	R0702	**HF756100**	Carbon Resistor	1.0K 1/4 J				01
	R0706	**HF755220**	Carbon Resistor	220.0 1/4 J				01
	R0707	**HF756100**	Carbon Resistor	1.0K 1/4 J				01
	R0708	**HF755220**	Carbon Resistor	220.0 1/4 J				01
	R0709	**HF757100**	Carbon Resistor	10.0K 1/4 J				01
	R0710	**HF757220**	Carbon Resistor	22.0K 1/4 J				01
	R0711	**HF755220**	Carbon Resistor	220.0 1/4 J				01
	R0801	**HF757100**	Carbon Resistor	10.0K 1/4 J				01
	R0803	**HF756220**	Carbon Resistor	2.2K 1/4 J				01
	R0804	**HF757100**	Carbon Resistor	10.0K 1/4 J				01
	R0806	**HF756220**	Carbon Resistor	2.2K 1/4 J				01
	R0807	**HF757100**	Carbon Resistor	10.0K 1/4 J				01
	R0808	**HF753220**	Carbon Resistor	2.2 1/4 J				01

✻: New Parts

RANK: Japan only

	REF NO.	PART NO.	DESCRIPTION			REMARKS	QTY	RANK
	-0811	**HF753220**	Carbon Resistor	2.2 1/4 J				01
	R0812	**HF755100**	Carbon Resistor	100.0 1/4 J				01
	R0813	**HF755100**	Carbon Resistor	100.0 1/4 J				01
	R0814	**HF755330**	Carbon Resistor	330.0 1/4 J				01
	R0815	**HF755330**	Carbon Resistor	330.0 1/4 J				01
	R0903	**HF754820**	Carbon Resistor	82.0 1/4 J				01
	R0904	**HF755100**	Carbon Resistor	100.0 1/4 J				01
	RA601	**VL674500**	Resistor Array	RGLE12X223J				01
⚠	SW201	**VY980400**	Push Switch	SDDLB1 J,UC,CEE		STANDBY/ON		03
⚠	TH901	**VV458000**	Protector Switch	RUE250 2.50A 30V		Overcurrent protection		03
	TR701	**IC174070**	Transistor	2SC1740S R,S				01
	TR702	**IC174070**	Transistor	2SC1740S R,S				01
	VR101	**VZ048400**	Rotary Variable Resistor	A10K XV0141GPVN20F		MASTER VOLUME		02
	WH010	--	GND Wire	GND L=50		(V912250)		
	WH101	--	Connector Assembly	VR 5P L=160		(V873450)		
	WH201	--	Connector Assembly	PS 4P L=200		(V873490)		
	WH401	--	Connector Assembly	RE 3P L=330		(V873460)		
	WH801	--	Connector Assembly	TW-L 2P L=560		(V873470)		
	WH802	--	Connector Assembly	TW-R 2P L=820		(V873480)		
	WH901	--	Connector Assembly	+5D 2P L=120		(V873570)		
*		**V8454700**	Circuit Board	DMLCD		(X2235C0)		
	C0101	**US062100**	Ceramic Capacitor-SL(chip)	100P 50V J				01
	C0102	**US145100**	Ceramic Capacitor-F (chip)	0.1000 25V Z				01
	C0103	**UF028100**	Electrolytic Cap. (chip)	100 10V				01
	C0104	**US145100**	Ceramic Capacitor-F (chip)	0.1000 25V Z				01
	C0105	**US145100**	Ceramic Capacitor-F (chip)	0.1000 25V Z				01
	C0106	**UF028100**	Electrolytic Cap. (chip)	100 10V				01
	C0107	**US145100**	Ceramic Capacitor-F (chip)	0.1000 25V Z				01
	-0113	**US145100**	Ceramic Capacitor-F (chip)	0.1000 25V Z				01
	C0114	**UF028100**	Electrolytic Cap. (chip)	100 10V				01
	C0115	**US145100**	Ceramic Capacitor-F (chip)	0.1000 25V Z				01
	-0120	**US145100**	Ceramic Capacitor-F (chip)	0.1000 25V Z				01
	C0121	**UF028100**	Electrolytic Cap. (chip)	100 10V				01
	C0122	**US145100**	Ceramic Capacitor-F (chip)	0.1000 25V Z				01
	C0123	**US145100**	Ceramic Capacitor-F (chip)	0.1000 25V Z				01
	C0124	**US064100**	Ceramic Capacitor-B (chip)	0.0100 50V K				01
	C0125	**US145100**	Ceramic Capacitor-F (chip)	0.1000 25V Z				01
	C0130	**US145100**	Ceramic Capacitor-F (chip)	0.1000 25V Z				01
	-0133	**US145100**	Ceramic Capacitor-F (chip)	0.1000 25V Z				01
	C0134	**US062100**	Ceramic Capacitor-SL(chip)	100P 50V J				01
	C0135	**US062100**	Ceramic Capacitor-SL(chip)	100P 50V J				01
	C0201	**US145100**	Ceramic Capacitor-F (chip)	0.1000 25V Z				01
	-0204	**US145100**	Ceramic Capacitor-F (chip)	0.1000 25V Z				01
	C0301	**US145100**	Ceramic Capacitor-F (chip)	0.1000 25V Z				01
	C0302	**US145100**	Ceramic Capacitor-F (chip)	0.1000 25V Z				01
	C0303	**UF028100**	Electrolytic Cap. (chip)	100 10V				01
	C0304	**US145100**	Ceramic Capacitor-F (chip)	0.1000 25V Z				01
	C0501	**US145100**	Ceramic Capacitor-F (chip)	0.1000 25V Z				01
	C0502	**UF037470**	Electrolytic Cap. (chip)	47 16V				01
	C0503	**UF037470**	Electrolytic Cap. (chip)	47 16V				01
	C0504	**US063220**	Ceramic Capacitor-B (chip)	2200P 50V K				01
	C0505	**US063220**	Ceramic Capacitor-B (chip)	2200P 50V K				01
	C0506	**US062220**	Ceramic Capacitor-SL(chip)	220P 50V J				01
	C0507	**US062220**	Ceramic Capacitor-SL(chip)	220P 50V J				01
	C0508	**US062330**	Ceramic Capacitor-SL(chip)	330P 50V J				01
	C0509	**US062330**	Ceramic Capacitor-SL(chip)	330P 50V J				01
	C0510	**UF066470**	Electrolytic Cap. (chip)	4.7 50V				01
	C0511	**UF066470**	Electrolytic Cap. (chip)	4.7 50V				01
	C0512	**US145100**	Ceramic Capacitor-F (chip)	0.1000 25V Z				01
	C0513	**UF037470**	Electrolytic Cap. (chip)	47 16V				01
	C0514	**US062100**	Ceramic Capacitor-SL(chip)	100P 50V J				01
	C0515	**US062100**	Ceramic Capacitor-SL(chip)	100P 50V J				01
	C0516	**US145100**	Ceramic Capacitor-F (chip)	0.1000 25V Z				01
	-0518	**US145100**	Ceramic Capacitor-F (chip)	0.1000 25V Z				01
	C0601	**US062100**	Ceramic Capacitor-SL(chip)	100P 50V J				01
	-0603	**US062100**	Ceramic Capacitor-SL(chip)	100P 50V J				01
	C0701	**US062100**	Ceramic Capacitor-SL(chip)	100P 50V J				01
	-0715	**US062100**	Ceramic Capacitor-SL(chip)	100P 50V J				01
	C0718	**US145100**	Ceramic Capacitor-F (chip)	0.1000 25V Z				01

✻: New Parts

RANK: Japan only

	REF NO.	PART NO.	DESCRIPTION			REMARKS	QTY	RANK
	C0719	**UF028100**	Electrolytic Cap. (chip)	100 10V				01
	C0720	**US145100**	Ceramic Capacitor-F (chip)	0.1000 25V Z				01
	C0801	**UF028100**	Electrolytic Cap. (chip)	100 10V				01
	C0802	**US145100**	Ceramic Capacitor-F (chip)	0.1000 25V Z				01
	C0803	**US145100**	Ceramic Capacitor-F (chip)	0.1000 25V Z				01
*	CL101	**V9366600**	Ceramic Resonator	8.4672M CSTCC8M46				01
*	CN501	**V8903100**	Connector, FFC	52793 24P SE				01
*	CN701	**V8903100**	Connector, FFC	52793 24P SE				01
	D0701	**VT332900**	Diode	1SS355 TE-17				01
	-0708	**VT332900**	Diode	1SS355 TE-17				01
	IC101	**XU947C00**	IC	HG73C205AFD		SWX00B		09
	IC102	**XS516A00**	IC	UPC2933T-E1		REGULATOR +3.3V		03
	IC103	**X0165A00**	IC	PST596DNR		SYSTEM RESET		02
	IC104	**X0158A00**	IC	SN74AHCT1G08DCKR		AND GATE		01
*	IC202	**X2637100**	IC	MX23L6410TC-10		MASK ROM 64M PROGRAM/WAVE		
*	IC202	**X2637200**	IC	MX23L6410TC-10				
*	IC301	**X0652A00**	IC	M5M51008DFP-55H		SRAM 1M		06
*	IC302	**X0652A00**	IC	M5M51008DFP-55H		SRAM 1M		06
*	IC303	**X2721A00**	IC	MX29F400BTC-55		FLASH ROM 4M		08
	IC501	**XR998A00**	IC	UPD6379AGR		DAC		04
	IC502	**XF634A00**	IC	UPC4572G2-T1		OP AMP		02
	IC701	**XH223A00**	IC	SN74HC273NSR		D-FF		01
	IC801	**XZ987A00**	IC	ML9040A-B01GA		LCD DRIVER		05
	L0101	**VY657200**	Chip Inductance	600 BK1608HM601				01
	L0104	**VY657200**	Chip Inductance	600 BK1608HM601				01
	-0107	**VY657200**	Chip Inductance	600 BK1608HM601				01
	R0101	**RD355220**	Carbon Resistor (chip)	220.0 63M J				01
	R0102	**RD357100**	Carbon Resistor (chip)	10.0K 63M J				01
	R0103	**RD355100**	Carbon Resistor (chip)	100.0 63M J				01
	R0104	**RD355100**	Carbon Resistor (chip)	100.0 63M J				01
	R0105	**RD357470**	Carbon Resistor (chip)	47.0K 63M J				01
	R0106	**RD357470**	Carbon Resistor (chip)	47.0K 63M J				01
	R0107	**RD354470**	Carbon Resistor (chip)	47.0 63M J				01
	-0110	**RD354470**	Carbon Resistor (chip)	47.0 63M J				01
	R0111	**RD357470**	Carbon Resistor (chip)	47.0K 63M J				01
	-0114	**RD357470**	Carbon Resistor (chip)	47.0K 63M J				01
	R0115	**RD357100**	Carbon Resistor (chip)	10.0K 63M J				01
	-0118	**RD357100**	Carbon Resistor (chip)	10.0K 63M J				01
	R0119	**RD357470**	Carbon Resistor (chip)	47.0K 63M J				01
	R0120	**RD357470**	Carbon Resistor (chip)	47.0K 63M J				01
	R0121	**RD358180**	Carbon Resistor (chip)	180.0K 63M J				01
	R0122	**RD358180**	Carbon Resistor (chip)	180.0K 63M J				01
	R0123	**RD358100**	Carbon Resistor (chip)	100.0K 63M J				01
	R0124	**RD358100**	Carbon Resistor (chip)	100.0K 63M J				01
	R0125	**RD355100**	Carbon Resistor (chip)	100.0 63M J				01
	R0126	**RD355100**	Carbon Resistor (chip)	100.0 63M J				01
	R0201	**RD357100**	Carbon Resistor (chip)	10.0K 63M J				01
	R0202	**RD357470**	Carbon Resistor (chip)	47.0K 63M J				01
	R0203	**RD357470**	Carbon Resistor (chip)	47.0K 63M J				01
	R0301	**RD357470**	Carbon Resistor (chip)	47.0K 63M J				01
	R0302	**RD354470**	Carbon Resistor (chip)	47.0 63M J				01
	R0303	**RD357470**	Carbon Resistor (chip)	47.0K 63M J				01
	R0304	**RD354470**	Carbon Resistor (chip)	47.0 63M J				01
	R0501	**RD356220**	Carbon Resistor (chip)	2.2K 63M J				01
	R0502	**RD356220**	Carbon Resistor (chip)	2.2K 63M J				01
	R0503	**RD357220**	Carbon Resistor (chip)	22.0K 63M J				01
	-0508	**RD357220**	Carbon Resistor (chip)	22.0K 63M J				01
	R0601	**RD356100**	Carbon Resistor (chip)	1.0K 63M J				01
	-0604	**RD356100**	Carbon Resistor (chip)	1.0K 63M J				01
	R0701	**RD357470**	Carbon Resistor (chip)	47.0K 63M J				01
	-0707	**RD357470**	Carbon Resistor (chip)	47.0K 63M J				01
	R0708	**RD355220**	Carbon Resistor (chip)	220.0 63M J				01
	-0715	**RD355220**	Carbon Resistor (chip)	220.0 63M J				01
	R0718	**RD355560**	Carbon Resistor (chip)	560.0 63M J				01
	-0729	**RD355560**	Carbon Resistor (chip)	560.0 63M J				01
	R0742	**RD355220**	Carbon Resistor (chip)	220.0 63M J				01
	-0748	**RD355220**	Carbon Resistor (chip)	220.0 63M J				01
	R0801	**RD356220**	Carbon Resistor (chip)	2.2K 63M J				01
	-0805	**RD356220**	Carbon Resistor (chip)	2.2K 63M J				01
	R0806	**RD355220**	Carbon Resistor (chip)	220.0 63M J				01

*: New Parts

RANK: Japan only

	REF NO.	PART NO.	DESCRIPTION			REMARKS	QTY	RANK
	R0807	**RD354680**	Carbon Resistor (chip)	68.0 63M J				01
*	R0808	**RF457910**	Carbon Resistor (chip)	91.0K D				
	R0813	**RD356150**	Carbon Resistor (chip)	1.5K 63M J				01
*	TH801	**V9140600**	Thermistor (chip)	ERTJ1VT152J 1.5K				
	TR701	**VY677600**	Digital Transistor	DTC123JKA TP				01
	-704	**VY677600**	Digital Transistor	DTC123JKA TP				01
*		**AAX34900**	Circuit Board	PN-L		(V841720)(X2237C0)		
*		**AAX34910**	Circuit Board	PN-C		(V841720)(X2237C0)		
*		**AAX34920**	Circuit Board	PN-R		(V841720)(X2237C0)		
	CN001	**VI879300**	Cable Holder	51048 15P TE				01
	CN002	**VI879300**	Cable Holder	51048 15P TE				01
*	CN003	**V4757900**	FFC Connector	52807 24P SE				01
	CN004	**VI878700**	Cable Holder	51048 9P TE				01
	CN005	**VI878700**	Cable Holder	51048 9P TE				01
*	LD001	**V8732600**	LED	E1L4E-SB1Ax-02		SONG		
*	LD002	**V8732600**	LED	E1L4E-SB1Ax-02		STYLE		
*	LD003	**V8732600**	LED	E1L4E-SB1Ax-02		VOICE		
*	LD004	**V8732600**	LED	E1L4E-SB1Ax-02		M.D.B.		
	WH001	--	LED	PN-R 15P L=200		(V873430)		
	WH002	--	LED	PN-L 9P L=200		(V873440)		
*		**X2549A00**	Speaker	12.0cm 4 ohm 8W		WOOFER	2	
		X0159A00	Speaker	3.0cm		TWEETER	2	01
*		**V8404400**	LCD	RCD2185T				
*		**V8804100**	Back Light Assembly	E				

✻: New Parts

RANK: Japan only

■ PSR-290/PSR-292 BLOCK DIAGRAM

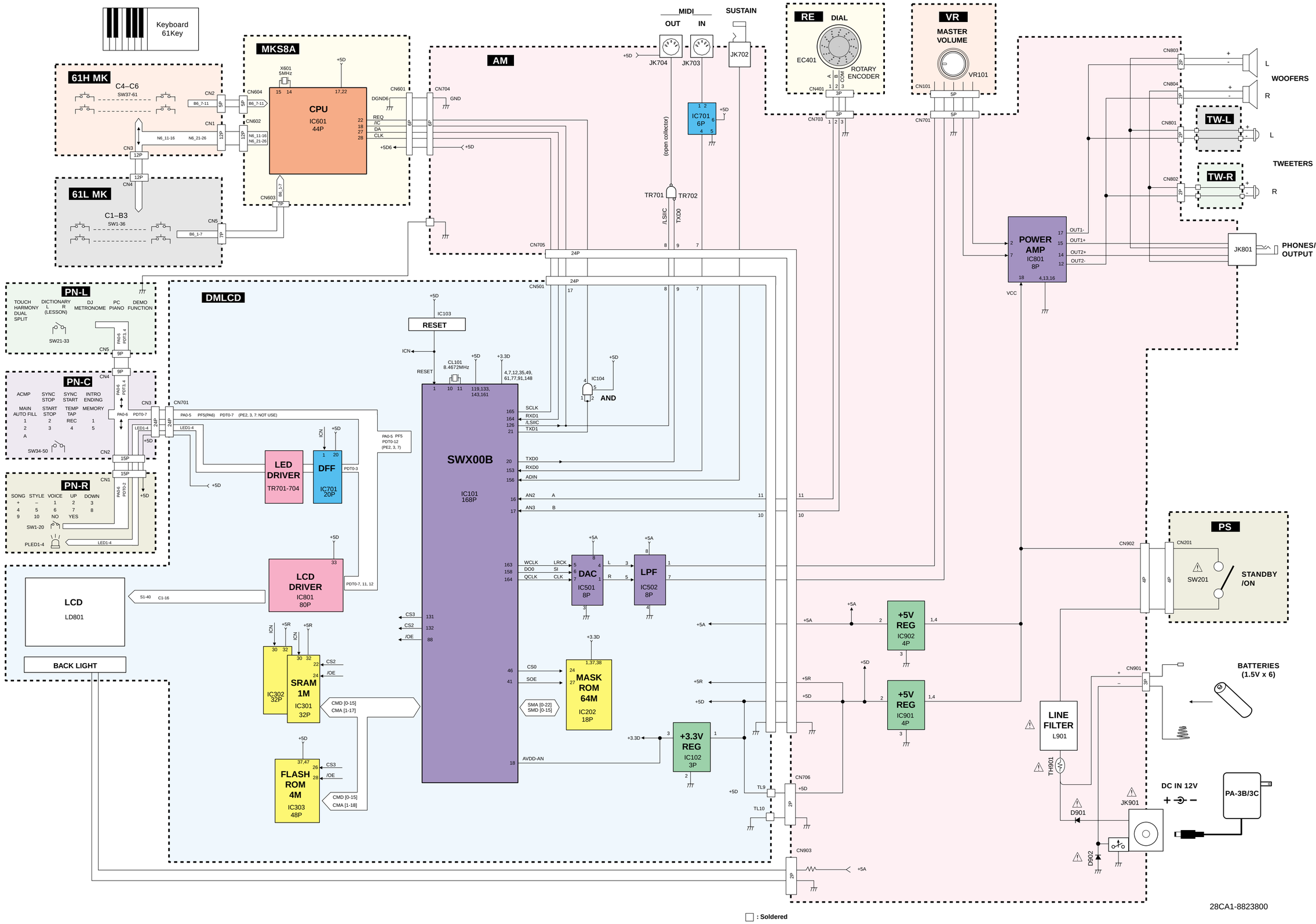

□ : Soldered

28CA1-8823800

■ PSR-290/PSR-292 BLOCK DIAGRAM

■ PSR-290/PSR-292 OVERALL CIRCUIT DIAGRAM 1/3 (DMLCD)

DMLCD

- µPC2933T(XS516A00)
  REGULATOR +3.3V



1: V in
2: GND
3: V out

MASK ROM 64M PROGRAM/WAVE

FLASH ROM 4M

SRAM 1M

SRAM 1M

REGULATOR +3.3V

SYSTEM RESET

AND

SWX00B

SWX00B
IC101

D-FF

LED DRVER

DAC

OP AMP
fc=33KHz -6db/oct
fc=27KHz -12db/oct

LCD DRIVER

LCD BACK LIGHT

to AM-CN903

to PN-C-CN3

to AM-CN705

to AM-CN706

not installed

DMLCD : 28CC1-8823801 1

（セ）: Ceramic Capacitor
金皮: Metal Film Resistor

Note : See parts list for details of circuit board component parts.

■ PSR-290/PSR-292 OVERALL CIRCUIT DIAGRAM 1/3 (DMLCD)

■ PSR-290/PSR-292 OVERALL CIRCUIT DIAGRAM 2/3 (PN-L, PN-C, PN-R, MKS8A, 61H-MK, 61L-MK)

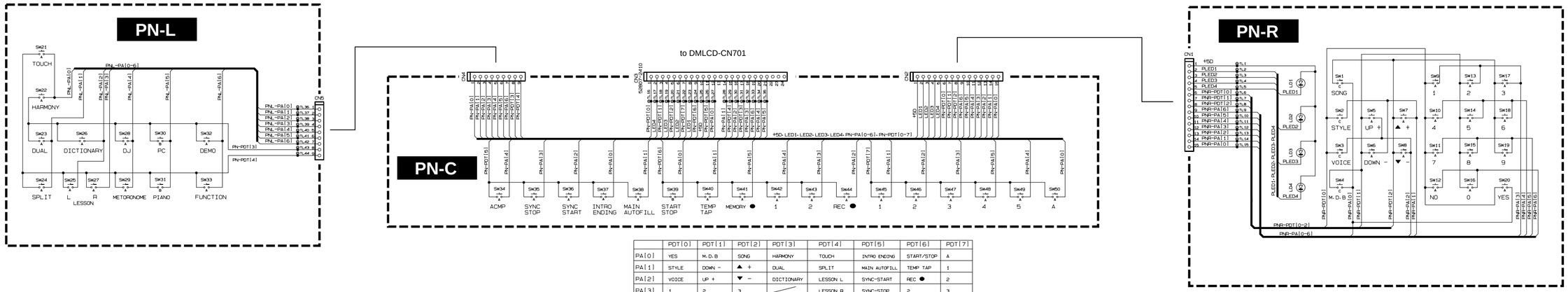

	PDT[0]	PDT[1]	PDT[2]	PDT[3]	PDT[4]	PDT[5]	PDT[6]	PDT[7]
PA[0]	YES	M.D.B	SONG	HARMONY	TOUCH	INTRO ENDING	START/STOP	A
PA[1]	STYLE	DOWN −	▲ +	DUAL	SPLIT	MAIN AUTOFILL	TEMP TAP	1
PA[2]	VOICE	UP +	▼ −	DICTIONARY	LESSON L	SYNC-START	REC ●	2
PA[3]	1	2	3		LESSON R	SYNC-STOP	2	3
PA[4]	4	5	6	DJ	METRONOME	ACMP	1	5
PA[5]	7	8	9	PC	PIANO		MEMORY ●	4
PA[6]	NO	0		DEMO	FUNCTION			

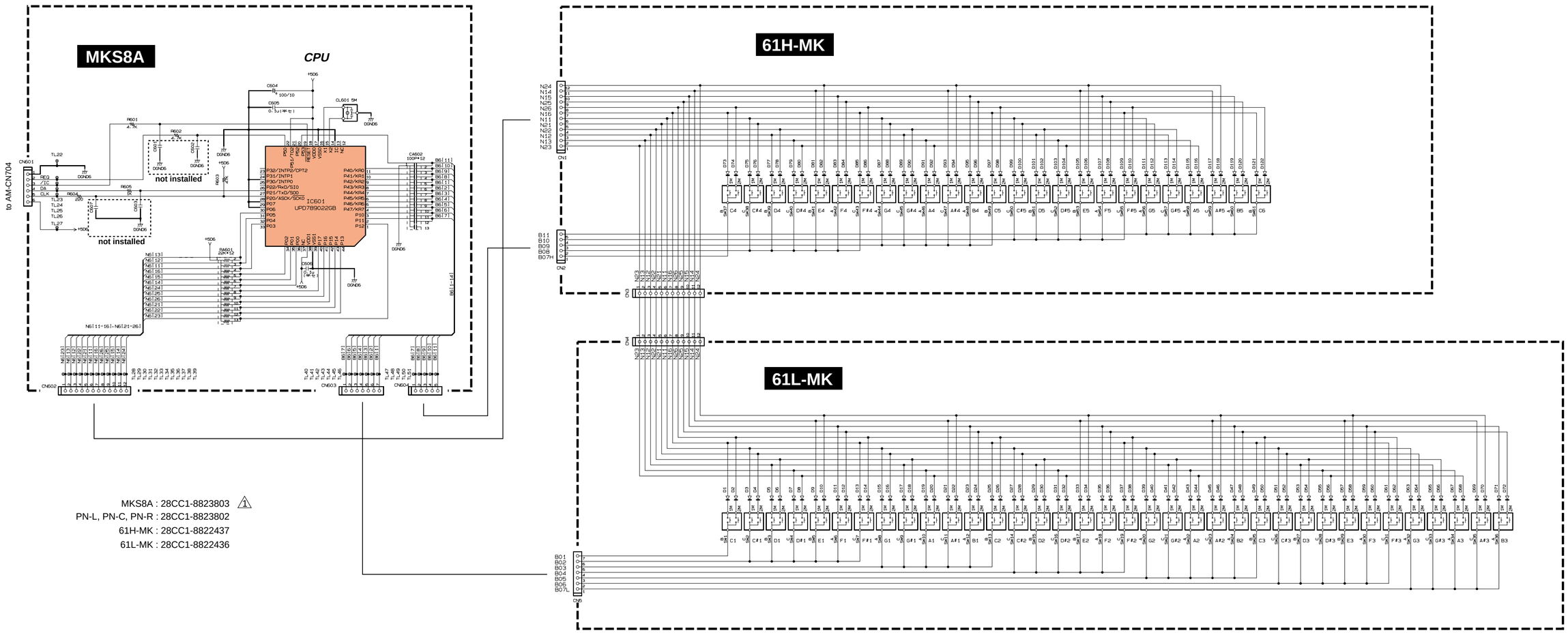

MKS8A : 28CC1-8823803 ⚠1
PN-L, PN-C, PN-R : 28CC1-8823802
61H-MK : 28CC1-8822437
61L-MK : 28CC1-8822436

(ﾁｯｾ) : Semiconductive Ceramic Capacitor

Note : See parts list for details of circuit board component parts.

■ PSR-290/PSR-292 OVERALL CIRCUIT DIAGRAM 2/3 (PN-L, PN-C, PN-R, MKS8A, 61H-MK, 61L-MK)

■ PSR-290/PSR-292 OVERALL CIRCUIT DIAGRAM 3/3 (AM, VR, RE, PS, TW-L, TW-R)

•PQ05RD11(XU814A00)
REGULATOR +5V 1.0A

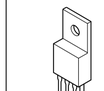

VR
MASTER VOLUME
RE
DIAL
ROTARY ENCODER
TW-R
TW-L
TWEETER
WOOFER
POWER AMP
AM
not installed
to MKS8A-CN601
to DMLCD-CN501
to DMLCD-TL9/TL10
SUSTAIN
MIDI IN
MIDI OUT
MIDI I/F
REGULATOR +5V
REGULATOR +5V
PHONES/OUTPUT
to Battery
STANDBY/ON
PS
DC IN 12V
to Back light assembly

WARNING
Components having special characteristics are marked ⚠ and must be replaced with parts having specification equal to those originally installed.

AM, VR, RE, PS, TW-L, TW-R : 28CC1-8823803 ⚠1

(マ): Mylar Capacitor
(セ): Ceramic Capacitor
(ﾁｯｾ): Semiconductive Ceramic Capacitor

Note : See parts list for details of circuit board component parts.

■ PSR-290/PSR-292 OVERALL CIRCUIT DIAGRAM 3/3 (AM, VR, RE, PS, TW-L, TW-R)