Digital Keyboard

KB-290
KB-291

SERVICE MANUAL

● **KB-290**



● **KB-291**



■ CONTENTS

SPECIFICATIONS 3
PANEL LAYOUT 4
CIRCUIT BOARD LAYOUT & WIRING 6
DISASSEMBLY PROCEDURE 8
LSI PIN DESCRIPTION 14
CIRCUIT BOARDS 17
TEST PROGRAM 24
USER DATA BACKUP 28
INITIALIZATION 29
SYSTEM BOOTING FLOWCHART 30
DMLCD CIRCUIT BOARD CHECK METHOD 31
PARTS LIST
BLOCK DIAGRAM
OVERALL CIRCUIT DIAGRAM

PK 001873

YAMAHA
HAMAMATSU, JAPAN

Copyright (c) Yamaha Corporation. All rights reserved. PDF '12.05

IMPORTANT NOTICE

This manual has been provided for the use of authorized Yamaha Retailers and their service personnel. It has been assumed that basic service procedures inherent to the industry, and more specifically Yamaha Products, are already known and understood by the users, and have therefore not been restated.

WARNING : Failure to follow appropriate service and safety procedures when servicing this product may result in personal injury, destruction of expensive components and failure of the product to perform as specified. For these reasons, we advise all Yamaha product owners that all service required should be performed by an authorized Yamaha Retailer or the appointed service representative.

IMPORTANT : This presentation or sale of this manual to any individual or firm does not constitute authorization certification, recognition of any applicable technical capabilities, or establish a principal-agent relationship of any form.

The data provided is belived to be accurate and applicable to the unit(s) indicated on the cover. The research engineering, and service departments of Yamaha are continually striving to improve Yamaha products. Modifications are, therefore, inevitable and changes in specification are subject to change without notice or obligation to retrofit. Should any discrepancy appear to exist, please contact the distributor's Service Division.

WARNING : Static discharges can destroy expensive components. Discharge any static electricity your body may have accumulated by grounding yourself to the ground bus in the unit (heavy gauge black wires connect to this bus.)

IMPORTANT : Turn the unit OFF during disassembly and parts replacement. Recheck all work before you apply power to the unit.

WARNING: This product contains chemicals known to the State of California to cause cancer, or birth defects or other reproductive harm.

DO NOT PLACE SOLDER, ELECTRICAL/ELECTRONIC OR PLASTIC COMPONENTS IN YOUR MOUTH FOR ANY REASON WHAT SO EVER!

Avoid prolonged, unprotected contact between solder and your skin! When soldering, do not inhale solder fumes or expose eyes to solder/flux vapor!

If you come in contact with solder or components located inside the enclosure of this product, wash your hands before handling food.

WARNING

Components having special characteristics are marked ⚠ and must be replaced with parts having specification equal to those originally installed.

SAVING DATA

Some data items are automatically saved as backup data in the internal memory even if you turn the power off. Saved data may be lost due to malfunction or incorrect operation. Save important data to a USB storage device or a computer. To protect against data loss through media damage, we recommend that you save your important data onto two USB storage devices/external media.

SPECIFICATIONS

尺寸/重量	尺寸 （宽 × 深 × 高）		947 x 401 x 160 mm
	重量		7.0 kg （不包括电池）
控制接口	键盘	琴键数	61
		力度感响应	是
	其它控制器	滑音轮	是
		滑音	是
	显示屏	类型	LCD显示画面
		背光	是
		语言	英文
	面板	语言	中文
音色	音源	音源技术	AWM立体声采样
	复音	复音数 （最大）	32
	预置	音色数	697 音色 （包括 22 个鼓/中国打击乐器组/声音效果+10个琶音音色 + 474个 XGlite音色）
	兼容性	GM/XGlite	是
效果器	类型	混响	10 个类型 （包括超宽立体声）
		合唱	4种类型
		和声	26种类型
		琶音	150种类型
	功能	双音色	是
		分割音色	是
		面板延音	是
伴奏型	预置	预置伴奏风格数	173
		指弹和弦模式	多重指法
		伴奏控制	和弦伴奏开/关、同步起动、起动/停止、前奏/尾声、主奏/自动插入
	自定义	用户伴奏	是
	其它功能	单触设置 （OTS）	是
乐曲	示范乐曲	示范曲数量	20
	录音	乐曲数量	5
		音轨数量	6
		数据容量	每5首乐曲约10,000音符 （当仅录制旋律轨时） 每5首乐曲约5,500个和弦 （当仅录制旋律轨时）
	兼容的数据格式	回放	SMF （格式0和1）
		录音	SMF （格式0）
功能	注册记忆	预设注册数量	16
		自定义注册数量	32
	整体控制	移调	-12-0-+12
		调音	427.0-440.0-453.0 Hz
存储	内置存储器		约1.79 MB
	外接驱动器		可选购的USB存储设备 （通过USB[TO DEVICE]端口）
连接	DC IN （直流输入）		直流输入 12 V 插口
	耳机/输出		［耳机/输出］ x 1
	延音踏板		［延音踏板］ x 1
	表现踏板		［表现踏板］ x 1
功放			6W x 2
音箱			12cm x 2 + 3cm x 2
电源	电源	适配器	PA-150A或Yamaha推荐的相应产品
		电池	六节电池 （1.5V AA 碱性电池/锰电池或1.2V 充电 Ni-MH电池）
	耗电量		• 10W （KB-290/291） • 13W （KB-290/291和 AC电源适配器）
附件	包含附件		• AC电源适配器 （PA-150A或Yamaha推荐的相应产品） • 谱架 • 表现踏板 EP-1 • 使用说明书 • Online Member Product Registration （在线会员产品注册） • 保证书
	可选附件		• 踏板：FC4，FC5

■ PANEL LAYOUT

顶部面板

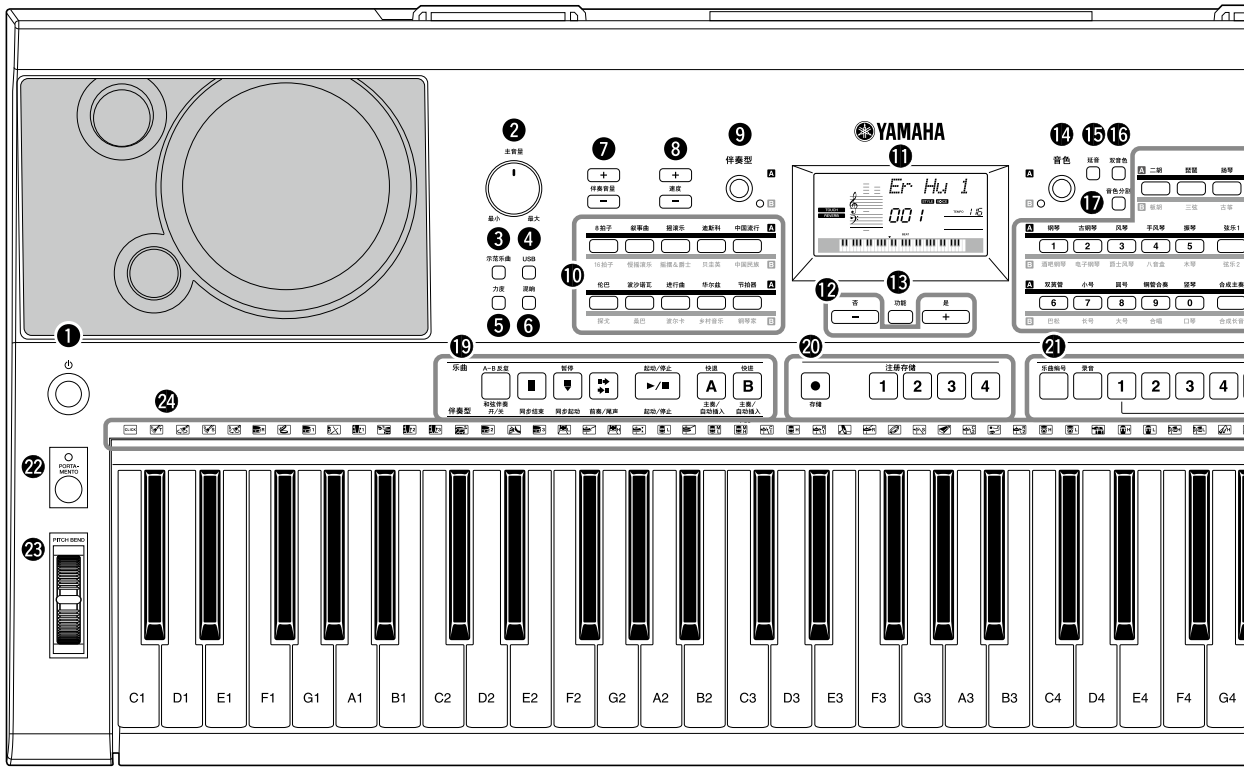

❶ [⏻]（待机 / 开）开关
❷ [主音量] 旋钮
❸ [示范乐曲] 按钮
❹ [USB] 按钮
❺ [力度] 按钮
❻ [混响] 按钮
❼ 伴奏音量 [+], [-] 按钮
❽ 速度 [+], [-] 按钮
❾ [伴奏型] 按钮
❿ 伴奏目录按钮
⓫ 显示屏
⓬ [-/ 否], [+/ 是] 按钮
⓭ [功能] 按钮
⓮ [音色] 按钮
⓯ [延音] 按钮
⓰ [双音色] 按钮
⓱ [音色分割] 按钮
⓲ 音色目录按钮
⓳ 乐曲 / 伴奏型控制按钮
⓴ 注册存储按钮
㉑ 乐曲存储按钮
㉒ [PORTAMENTO]（滑音）按钮
㉓ [PITCH BEND]（弯音）轮
㉔ 打击乐器组图标

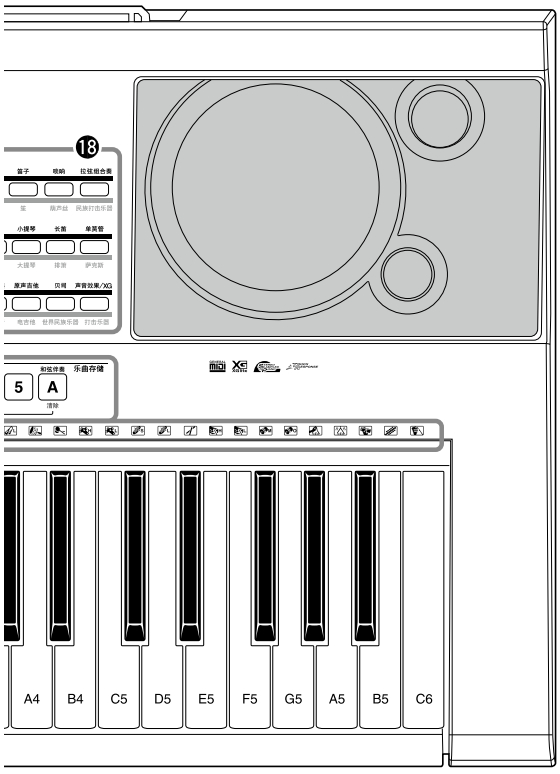

后面板

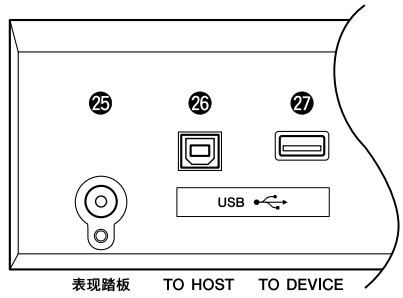

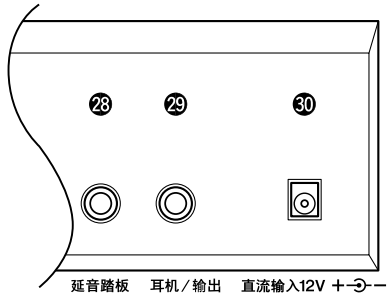

㉕［表现踏板］插孔
㉖ USB [TO HOST] 端口
㉗ USB [TO DEVICE] 端口
㉘［延音踏板］插孔
㉙［耳机 / 输出］插孔
㉚ 直流输入插口

■ CIRCUIT BOARD LAYOUT & WIRING

● **Bottom view**

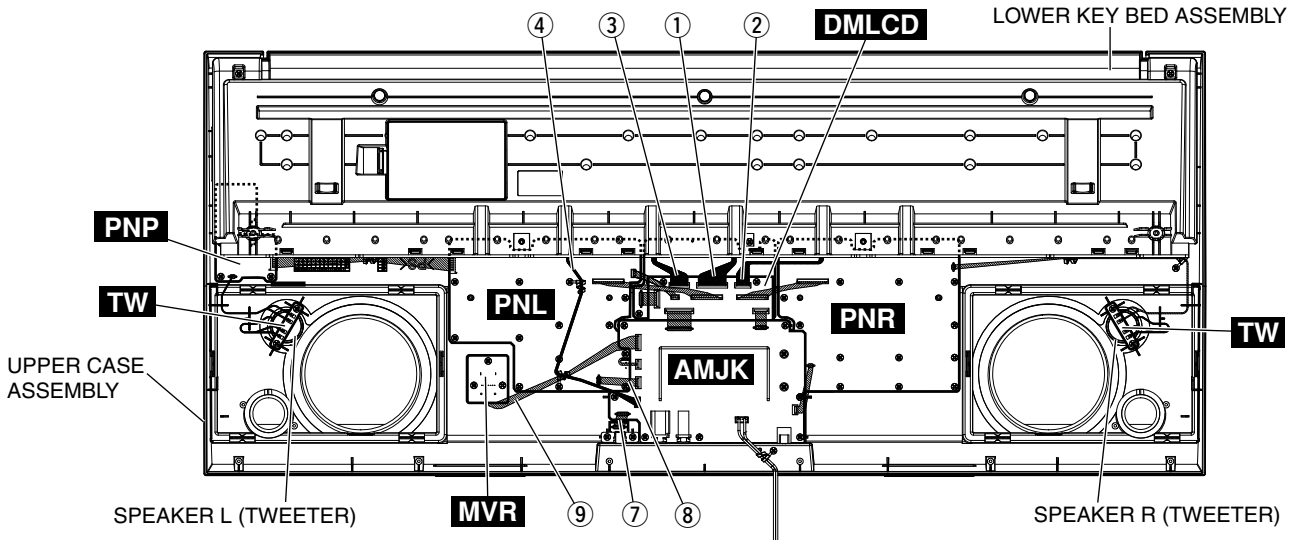

● **Top view**

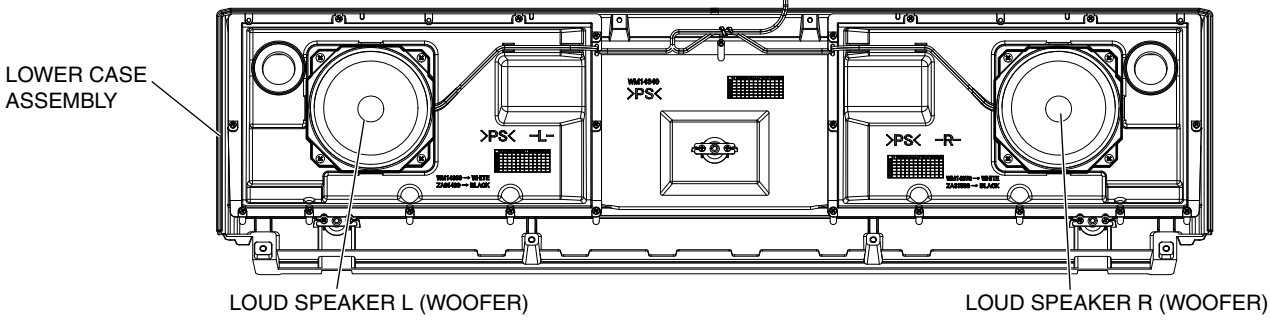

<UPPER CASE ASSEMBLY>

● **Bottom view**

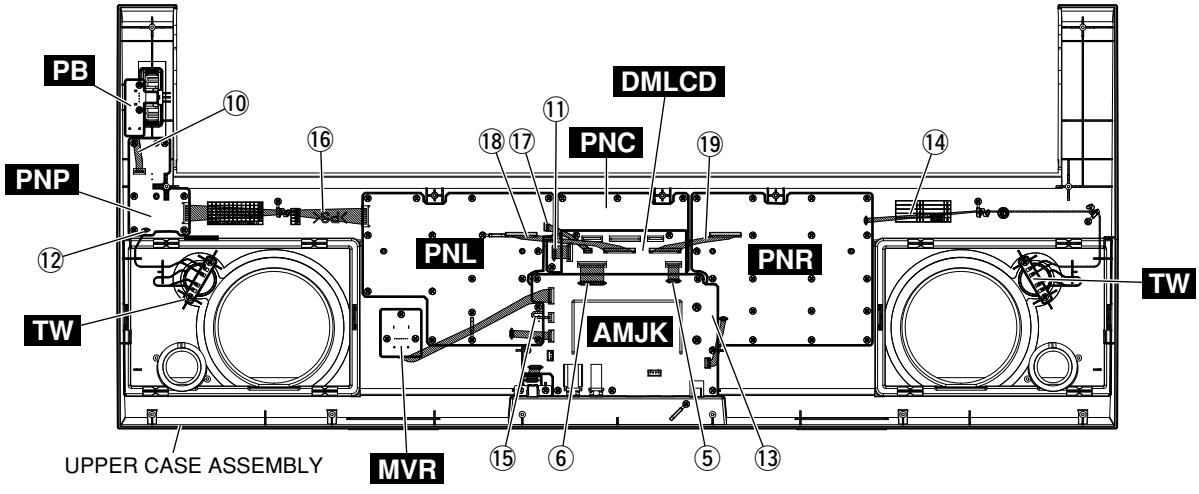

<LOWER KEY BED ASSEMBLY>

● **Top view**

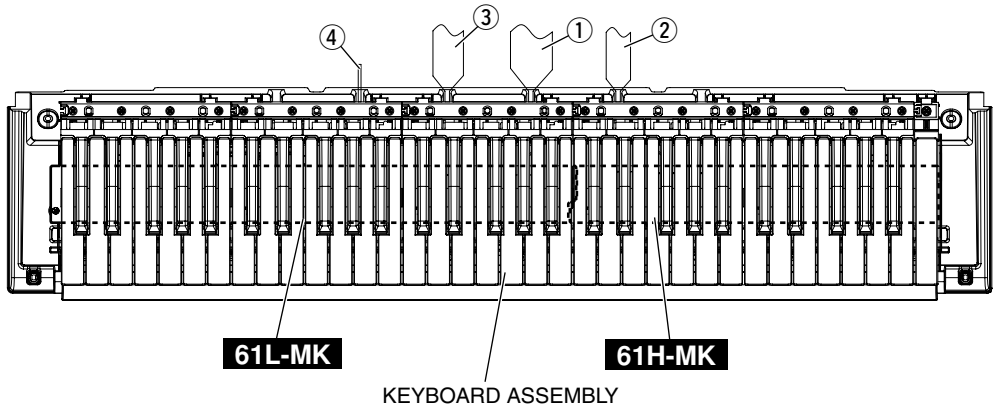

No.	Unit Name	Location	Parts No.	Connector Assembly	Destination						Remarks
①	LOWER KEY BED ASSEMBLY	30	(ZA27390)		61H-MK-CN1	*1	*4	DMLCD-CN501	*1	*4	12P L=250
②		40	(ZA26060)		61H-MK-CN2	*1	*4	DMLCD-CN503	*1	*4	5P L=250
③		50	(ZA26420)		61L-MK-CN5	*1	*4	DMLCD-CN502	*1	*4	7P L=200
④		120	(ZA53710)	BATT	SPRING TERMINAL (B/A)	*2	*6	AMJK-CN101	*1	*9	3P
⑤	AMJK CIRCUIT BOARD	WH001	(ZA17530)		AMJK-CN211	*3	*11	DMLCD-CN505	*1	*4	5P L=50
⑥		WH002	(ZA18490)		AMJK-CN212	*3	*11	DMLCD-CN504	*1	*4	11P L=50
⑦		WH003	(ZA17530)		AMJK-CN204	*3	*11	AMJK-CN103	*3	*11	5P L=50
⑧	PNL CIRCUIT BOARD	WH001	(ZA17230)		PNL-CN802	*3	*11	AMJK-CN205	*1	*4	3P L=100
⑨	MV CIRCUIT BOARD	WH002	(ZA17590)		MV-CN200	*3	*11	AMJK-CN203	*1	*4	5P L=200
⑩	PB CIRCUIT BOARD	WH003	(ZA25600)		PB-CN902	*3	*11	PNP-CN901	*1	*4	3P L=50
⑪	PNC CIRCUIT BOARD	WH004	(ZA17690)		PNC-CN806	*3	*11	DMLCD-CN300	*1	*4	6P L=50
⑫	PNP CIRCUIT BOARD	WH005	(ZA37800)	TWL	PNP-CN905	*3	*11	TW (+/-)	*2	*5	2P L=100
⑬	PNR CIRCUIT BOARD	WH701	(ZA25430)		PNR-CN701	*3	*11	AMJK-CN210	*1	*4	2P L=100
⑭		WH702	(ZA37790)	TWR	PNR-CN702	*3	*11	TW (+/-)	*2	*5	2P L=320
⑮	UPPER CASE ASSEMBLY	350	(WC60540)	BL	Back light assembly	*3	*5	AMJK-CN100	*1	*4	2P L=70
⑯		510	(ZA53660)	PNP	PNL-CN800	*1	*9	PNP-CN900	*1	*9	9P
⑰		520	(ZC35770)	PN	PNL-CN803	*1	*9	DMLCD-CN303	*1	*9	3P
⑱		530	(ZA57650)	PNL	PNL-CN804	*1	*9	DMLCD-CN302	*1	*9	14P
⑲		540	(ZA57650)	PNL	PNR-CN700	*1	*9	DMLCD-CN301	*1	*9	14P
⑳	LOWER CASE ASSEMBLY	30	(ZA35470)	SP	Speaker L (Woofer)	*2	*7	AMJK-CN209	*1	*10	4P
					Speaker R (Woofer)	*2	*8				

* The parts with "( )" in "**Part No.**" are not available as spare parts.
*1: Installation
*2: Manual soldering
*3: Dip soldering
*4: Edge mark is adjusted to Pin 1 mark (△ mark).
*5: Edge mark is adjusted to + mark.
*6: Red wire is connected to (+) terminal. Black wire is connected to (–) terminal.
*7: White wire is connected to (+) terminal. Black wire is connected to (–) terminal.
*8: Red wire is connected to (+) terminal. Black wire is connected to (–) terminal.
*9: Red wire is adjusted to Pin 1 mark (△ mark).
*10: White wire is adjusted to Pin 1 mark (△ mark).
*11: Connected

Caution: Be sure to attach the removed filament tape just as it was before removal.

DISASSEMBLY PROCEDURE

Caution: Be sure to attach the removed filament tape just as it was before removal.

1. Lower Case Assembly

(Time required: About 2 minutes)

1-1. Remove the six (6) screws marked [80A], two (2) screws marked [90] and two (2) screws marked [100A]. The lower case assembly can then be removed. (Fig. 1)

* ***When installing the lower case assembly, first tighten the screw marked [90] and then the remaining screws. (Fig. 1)***

2. Lower Key Bed Assembly

(Time required: About 3 minutes)

2-1. Remove the lower case assembly. (See procedure 1)

2-2. Remove the two (2) screws marked [80B] and screw marked [100B]. The lower key bed assembly can then be removed. (Fig. 2)

● **Bottom view**

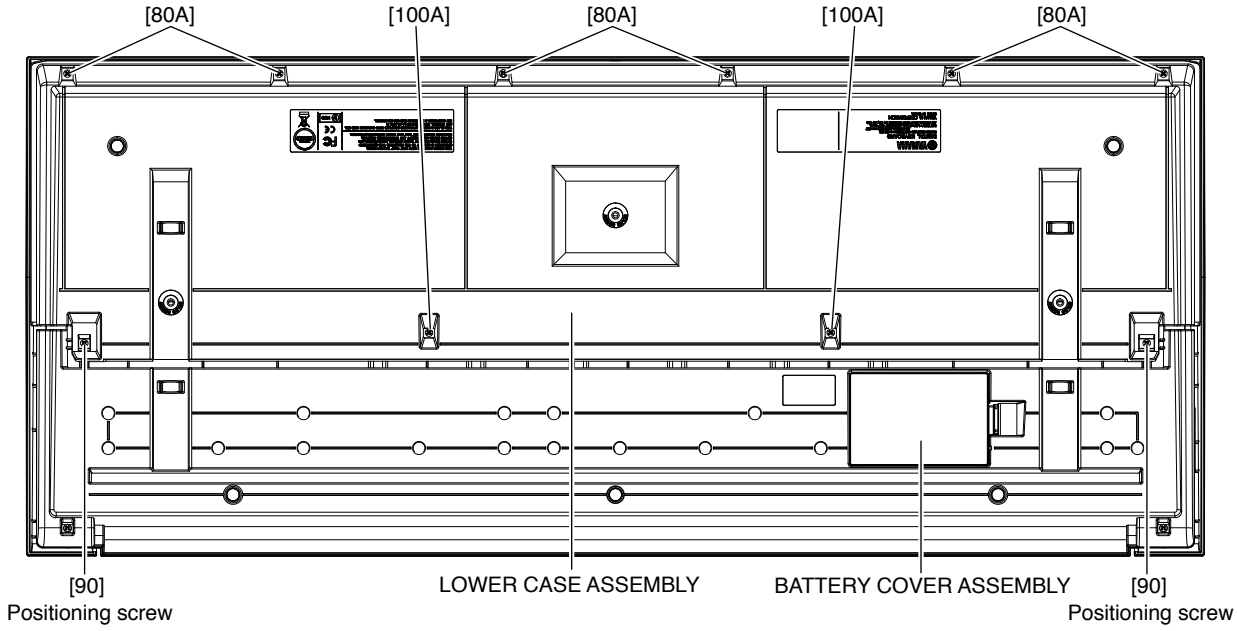

● **Top view**

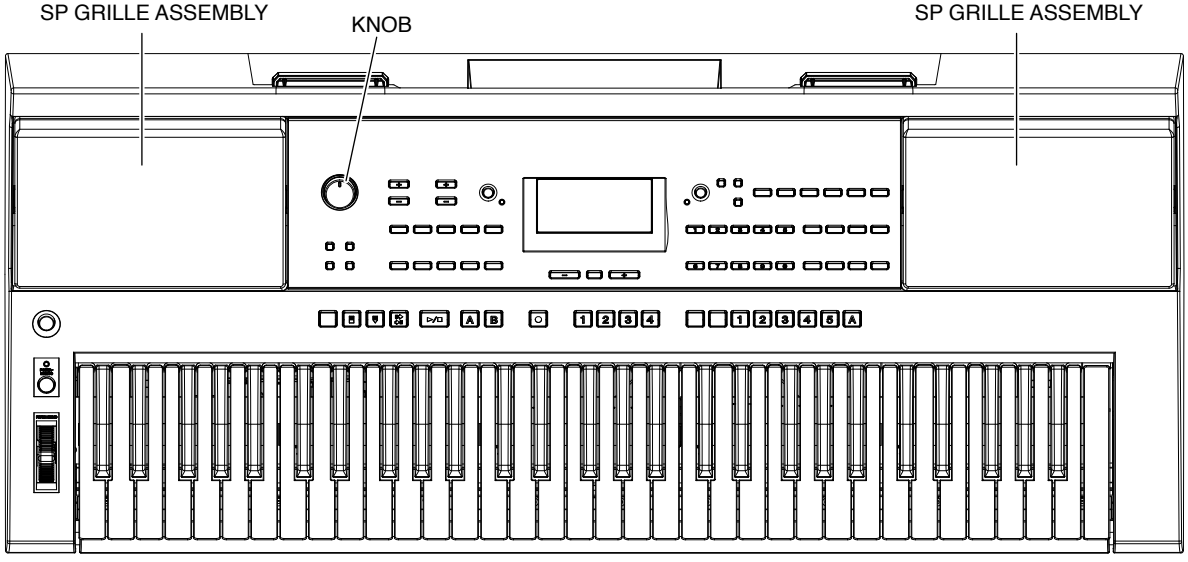

Fig. 1

3. AMJK Circuit Board

(Time required: About 4 minutes)

3-1. Remove the lower case assembly. (See procedure 1)

3-2. Remove the screw marked [400A] on the rear. (Fig. 2)

3-3. Remove the nine (9) screws marked [400B]. The AMJK circuit board can then be removed. (Fig. 2)

4. DMLCD Circuit Board, Back Light Assembly and LCD Display

(Time required: About 6 minutes)

4-1. Remove the lower case assembly. (See procedure 1.)

4-2. Remove the AMJK circuit board. (See procedure 3)

4-3. Remove the thirteen (13) screws marked [400C]. The DMLCD circuit board can then be removed. (Fig. 3)

* ***When installing the DMLCD circuit board, first tighten the screws in the order of 1 through 4 and then the remaining screws. (Fig. 3)***

4-4. Remove the back light assembly, LCD display and rubber connectors from the LCD panel molding. (Fig.4)

* ***Avoid touching the conductive part of the rubber connector as much as possible. Should foreign matter or dirt adhere, remove such contamination using adhesive tape or the like. Do not wipe off using solvents such as benzene or alcohol.***

● **Rear view**

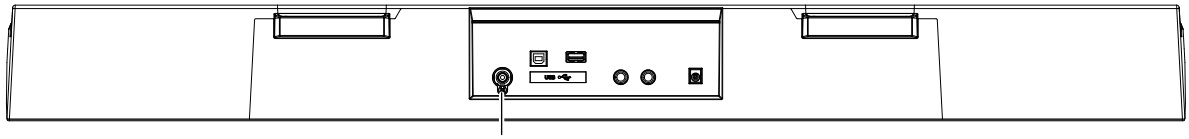

● **Bottom view**

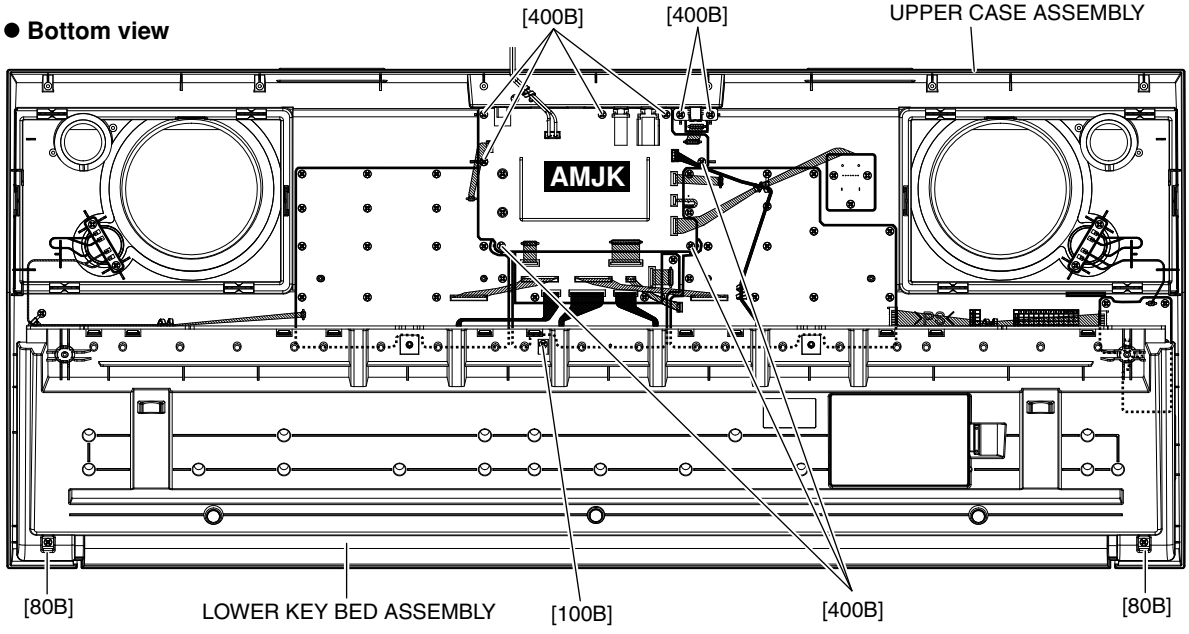

Fig. 2

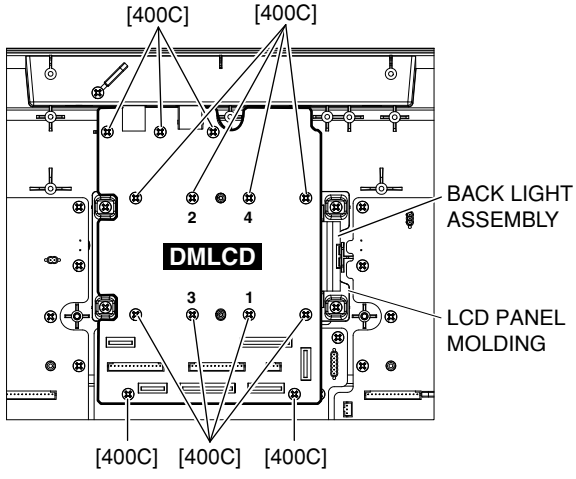

Fig. 3

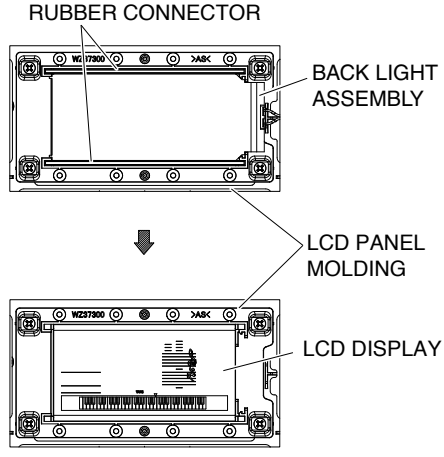

Fig. 4

5. MVR Circuit Board

(Time required: About 2 minutes)

5-1. Pull out the volume knob from the control panel as shown in Fig. 5.

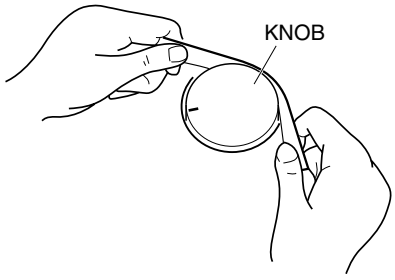

Fig. 5

5-2. Remove the lower case assembly. (See procedure 1)
5-3. Remove the three (3) screws marked [400D]. The MVR circuit board can then be removed. (Fig. 6)

6. TW Circuit Boards and Speakers (Tweeters)

(Time required: About 3 minutes each)

6-1. Remove the lower case assembly. (See procedure 1)
6-2. **TW Circuit Board (L) and Speaker L (Tweeter)**
Remove the connector assembly TW and speaker cable soldered to the TW circuit board (L) and remove the two (2) screws marked [400E]. The TW circuit board (L) and speaker L (tweeter) can then be removed. (Fig. 6)
6-3. **TW Circuit Board (R) and Speaker R (Tweeter)**
Remove the connector assembly TW and speaker cable soldered to the TW circuit board (R) and remove the two (2) screws marked [400F]. The TW circuit board (R) and speaker R (tweeter) can then be removed. (Fig. 6)

7. SP Grille Assembly

(Time required: About 3 minutes each)

7-1. Remove the lower case assembly. (See procedure 1.)
7-2. Set the four (4) projections [A] parallel to the groove in the upper case assembly and remove the SP grille assembly L. (Fig. 1, Fig. 7)

* ***The SP grille assembly R can be removed in the same manner.***

8. PNR Circuit Board

(Time required: About 5 minutes)

8-1. Remove the lower case assembly. (See procedure 1)
8-2. Remove the lower key bed assembly. (See procedure 2)
8-3. Remove the AMJK circuit board. (See procedure 3)
8-4. Remove the twenty (20) screws marked [400G]. The PNR circuit board can then be removed. (Fig. 7)

9. PNL Circuit Board

(Time required: About 5 minutes)

9-1. Remove the lower case assembly. (See procedure 1)
9-2. Remove the lower key bed assembly. (See procedure 2)
9-3. Remove the seventeen (17) screws marked [400H]. The PNL circuit board can then be removed. (Fig. 7)

10. PNC Circuit Board

(Time required: About 8 minutes)

10-1. Remove the lower case assembly. (See procedure 1)
10-2. Remove the lower key bed assembly. (See procedure 2)
10-3. Remove the AMJK circuit board. (See procedure 3)
10-4. Remove the DMLCD circuit board. (See procedure 4)
10-5. Remove the nine (9) screws marked [400I]. The PNC circuit board can then be removed. (Fig. 7)

11. PNP Circuit Board

(Time required: About 3 minutes)

11-1. Remove the lower case assembly. (See procedure 1)
11-2. Remove the lower key bed assembly. (See procedure 2)
11-3. Remove the six (6) screws marked [400J]. The PNP circuit board can then be removed. (Fig. 7)

12. PB Circuit Board and Wheel Assembly

(Time required: About 3 minutes each)

12-1. Remove the lower case assembly. (See procedure 1)
12-2. Remove the lower key bed assembly. (See procedure 2)
12-3. Remove the two (2) screws marked [400K]. The PB circuit board can then be removed with the wheel assembly attached. (Fig. 7)
12-4. Pull out the wheel assembly from the PB circuit board. (Fig. 8)

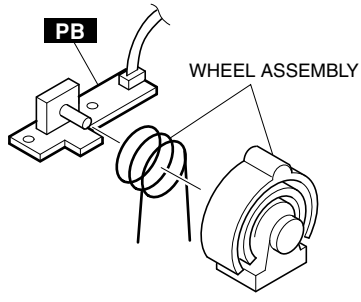

Fig. 8

13. Speakers (Woofers)

(Time required: About 3 minutes)

13-1. Remove the lower case assembly. (See procedure 1)
13-2. Remove the four (4) each screws marked [40] to the right and left. The speakers (woofers) to the right and left can then be removed. (Fig. 9)

<UPPER CASE ASSEMBLY>

● **Bottom view**

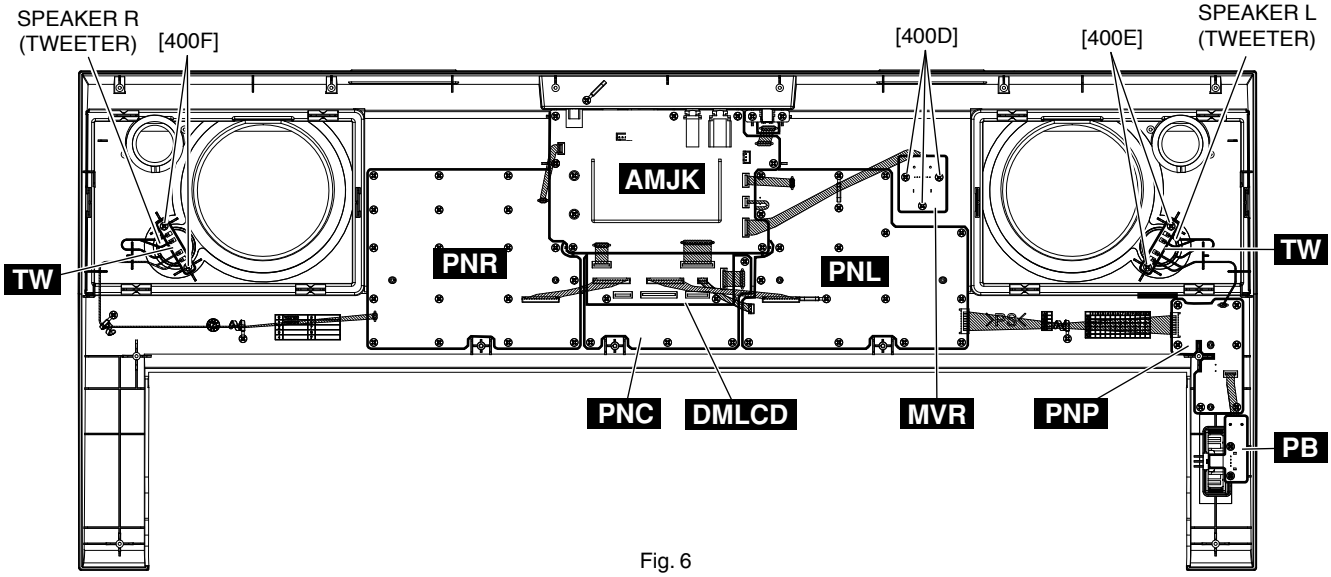

Fig. 6

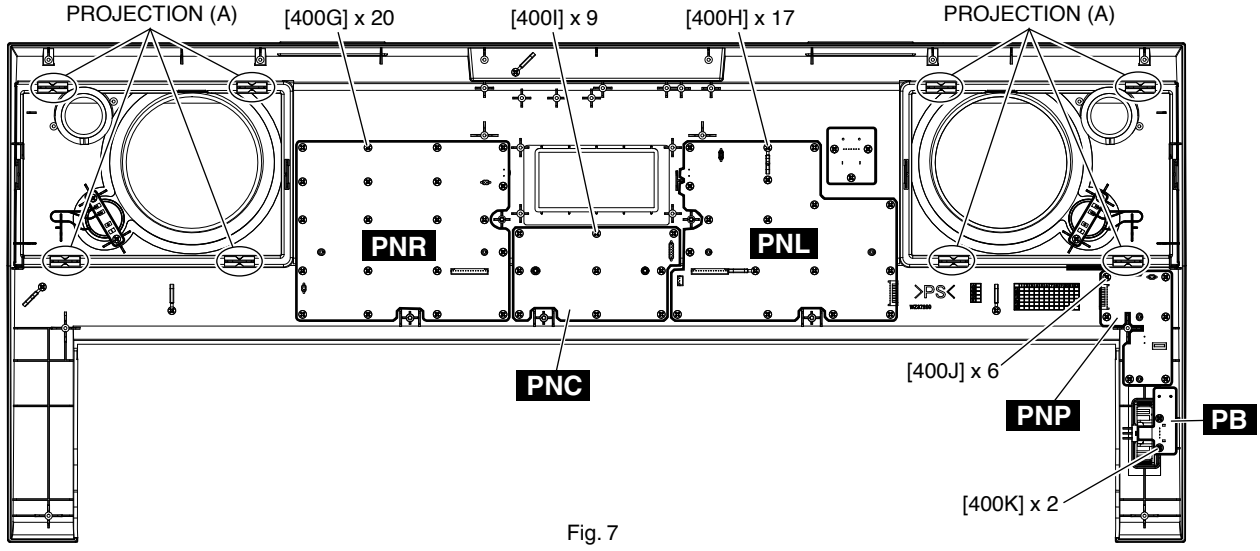

Fig. 7

<LOWER CASE ASSEMBLY>

● **Top view**

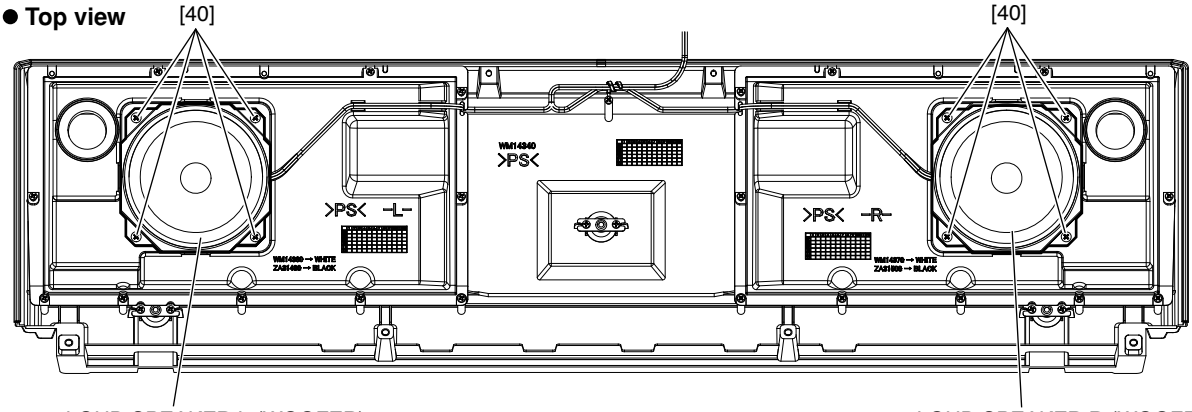

Fig. 9

14. Disassembling Keyboard Assembly

(Time required: About 13 minutes)

14-1. Remove the lower case assembly. (See procedure 1)

14-2. Remove the lower key bed assembly. (See procedure 2)

14-3. **White Keys and Black Keys**

14-3-1. White and black keys for one octave unit are integrated as a set. There are five sets in total. Only the C6 white key, unlike the other keys, is not integrated in a set. (Fig. 10)

14-3-2. To remove a set, remove the four (4) each screws marked [120A]. The white and black keys in the set can then be removed. (Fig. 10)
When removing, unfasten the two (2) hooks at the back of the black keys upward, and lift the white and black keys while pulling them toward you a little. (Photo 1)

14-3-3. To remove the white key C6, remove the screw marked [120B], unhook as described in Procedure 14-3-2, and pull out toward you. (Fig. 10)

* ***When all white and black keys were removed, first attach the white and black keys C3 ~ B3 aligning them with the boss, and then attach the remaining white and black keys. (Fig. 10)***

14-4. **Rubber Contact**

14-4-1. Remove the white and black keys corresponding to the rubber contacts to be removed. (See Fig. 10 and Procedure 14-3.)

14-4-2. Remove the rubber contacts. (Photo 2, Fig. 11)

14-5. **Circuit Board 61L-MK**

14-5-1. Remove the white and black keys from C1 to B3. (See Fig. 10 and Procedure 14-3.)

14-5-2. Remove the four (4) screws marked [100C] and eight (8) screws marked [110A]. The circuit board 61L-MK can then be removed. (Fig. 11)

* ***When installing the circuit board 61L-MK, tighten the screws 1 through 12 in numerical order as shown in the figure "61L-MK" in Fig. 12.***

14-6. **Circuit Board 61H-MK**

14-6-1. Remove the white and black keys from C4 to C6. (See Fig. 10 and Procedure 14-3.)

14-6-2. Remove the three (3) screws marked [100D] and five (5) screws marked [110B]. The circuit board 61H-MK can then be removed. (Fig. 11)

* ***When installing the circuit board 61H-MK, tighten the screws 1 through 8 in numerical order as shown in the figure "61H-MK" in Fig. 12.***

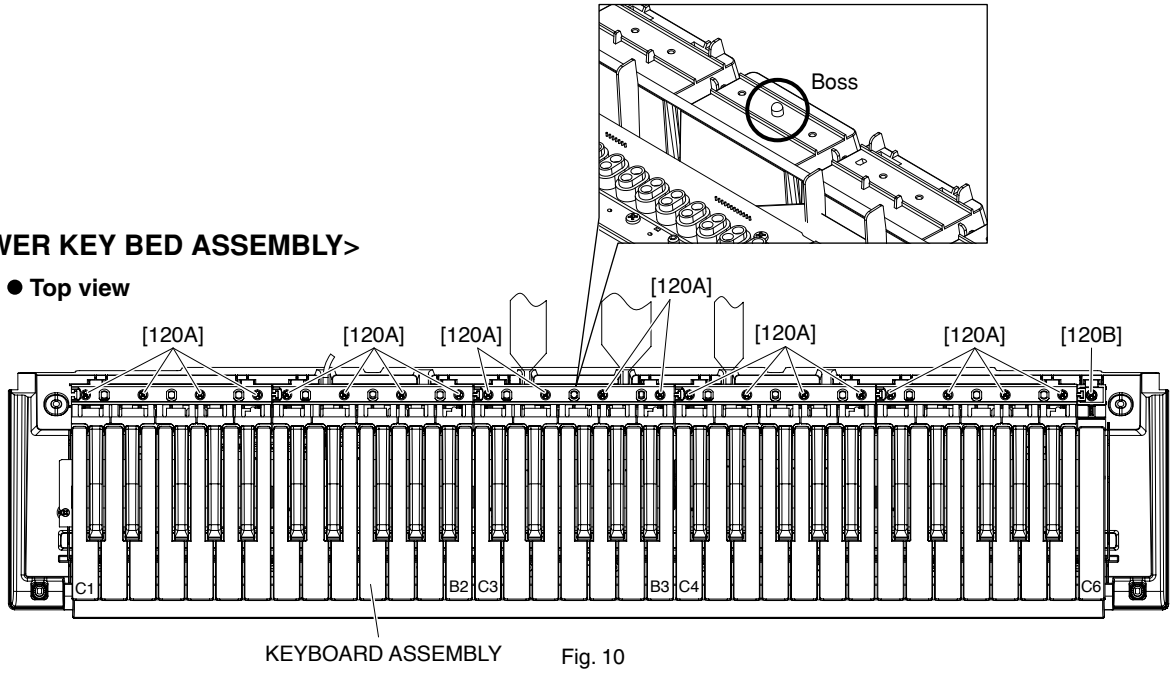

Fig. 10

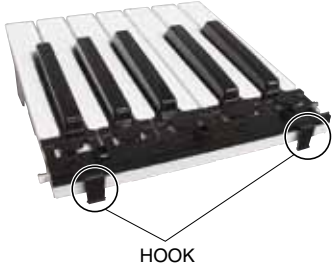

Photo 1



Photo 2

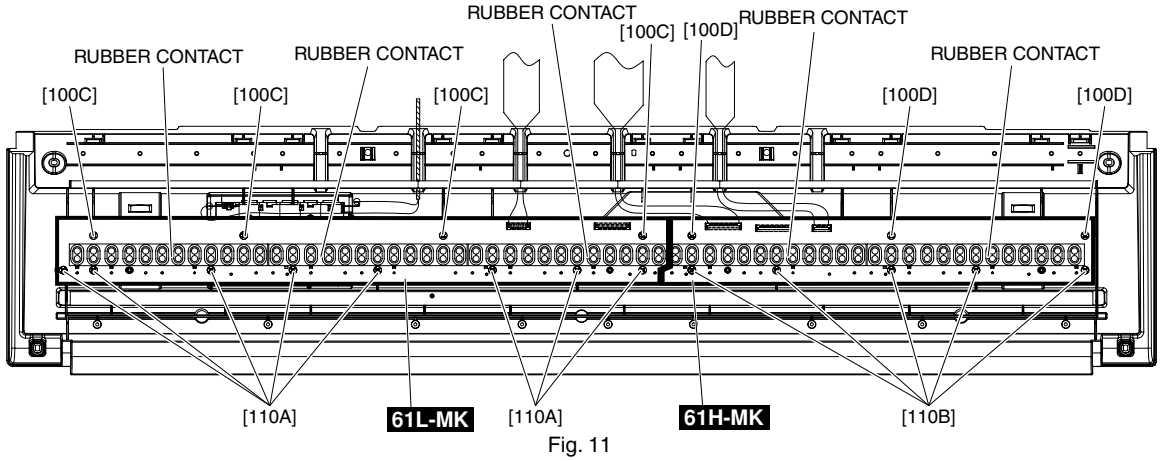

Fig. 11

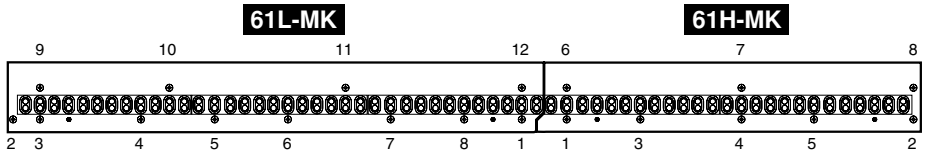

Fig. 12

15. How to Remove Spring Terminals

15-1. **Spring Terminal A and Spring Terminal B (Time required: About 4 minutes each)**

15-1-1. Remove the lower case assembly. (See procedure 1)

15-1-2. Remove the lower key bed assembly. (See procedure 2)

15-1-3. Remove the white and black keys from C1 to B2. (See Fig. 10 and Procedure 14-3.)

15-1-4. Remove the connector assembly BATT soldered to the spring terminal A and spring terminal B. (Photo 3)

15-1-5. Reverse the lower key bed assembly and remove the battery cover assembly. (Fig. 1)

15-1-6. Lift the spring terminal A a little and slide it in the upper right direction to remove it. (Fig. 13)

15-1-7. Remove the hook for the spring terminal B to pull it out from inside. (Fig. 13)

15-2. **Spring Terminal C and Spring Terminal D (Time required: About 1 minute each)**

15-2-1. Remove the battery cover assembly. (See procedure 15-1-5)

15-2-2. Remove the hooks to pull out the spring terminal C and spring terminal D. (Fig. 13, Fig. 14)

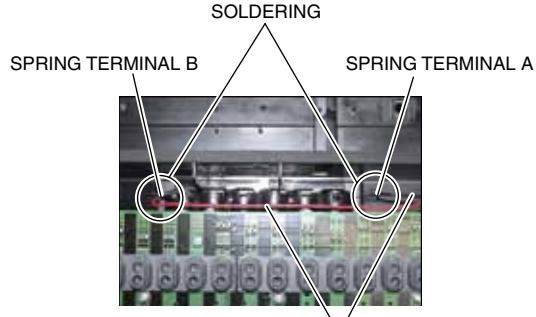

Photo 3

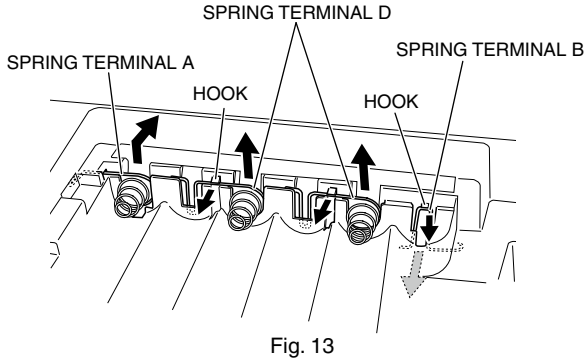

Fig. 13

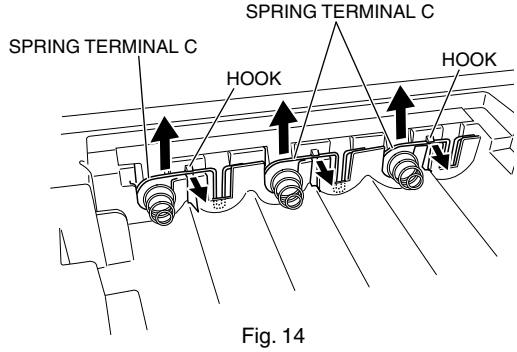

Fig. 14

■ LSI PIN DESCRIPTION

AK4385ET (X6040A01) **DAC** (Digital to Analog Converter).....16
NT3881DFG-01 (X3148A0R) **LCD DRIVER**.....16
ML9040A-B01GAZ03A (XZ987A0R) **LCD DRIVER**.....16
SPLC780D1-001A-HQ1 (YC471A00) **LCD DRIVER**.....16
R8A66597FP (YD645A00) **USB HOST CONTROLLER**.....14
SWL01U (YA876A00) **CPU**.....15

● R8A66597FP (YD645A00) USB HOST CONTROLLER

DMLCD: IC402

PIN NO.	NAME	I/O	FUNCTION	PIN NO.	NAME	I/O	FUNCTION
1	VIF	-	IO power supply +3.3V	41	VBUS	I	VBUS input
2	INT_N	O	Interrupt	42	GND	-	Ground
3	SOF_N	O	SOF pluse output	43	VCC	-	Power supply +3.3V
4	DREQ0_N	O	DMA request	44	RST_N	I	Reset signal
5	DACK0_N	I	DMA acknowledgement	45	GND	-	Ground
6	DEND0_N	I/O	DMA transfer end	46	MPBUS	I	Bus mode selection
7	DREQ1_N	O	DMA request	47	A1	I	Address bus
8	DACK1_N	I	DMA acknowledgement	48	A2	I	
9	DEND1_N	I/O	DMA transfer end	49	A3	I	
10	VDD	O	Output 1.5V with internal regulator –generated	50	GND	-	Ground
11	GND	-	Ground	51	VDD	O	Output 1.5V with internal regulator –generated
12	SD0	I/O	Split data bus	52	A4	I	Address bus
13	SD1	I/O		53	A5	I	
14	SD2	I/O		54	A6	I	
15	SD3	I/O		55	A7/ALE	I	Address bus/Address latch enabled
16	SD4	I/O		56	RD_N	I	Read strobe
17	SD5	I/O		57	WR0_N	I	D7-0 Byte write strobe
18	SD6	I/O		58	WR1_N	I	D15-8 Byte write strobe
19	SD7	I/O		59	CS_N	I	Chip select
20	VIF	-	IO power supply +3.3V	60	VIF	-	IO power supply +3.3V
21	GND	-	Ground	61	GND	-	Ground
22	VCC	-	Power supply +3.3V	62	D0	I/O	Data bus
23	XIN	I	Input for oscillation	63	D1/AD1	I/O	Data bus/Multiplex address bus
24	XOUT	O	Output for oscillation	64	D2/AD2	I/O	
25	AVCC	-	Analog power supply +3.3V	65	D3/AD3	I/O	
26	AGND	-	Ground	66	D4/AD4	I/O	
27	REFRIN	I	Reference input	67	D5/AD5	I/O	
28	VBOUT1	O	External power on	68	D6/AD6	I/O	
29	OVCUR1	I	Overcurrent input for Port1	69	D7/AD7	I/O	
30	VBOUT0	O	External power on	70	VIF	-	IO power supply +3.3V
31	EXTLP0	O	Control of external power for low power consumption	71	GND	-	Ground
32	ID0	I	ID input	72	D8	I/O	Data bus
33	OVCUR0A	I	Overcurrent input for Port0	73	D9	I/O	
34	OVCUR0B	I		74	D10	I/O	
35	VCC	-	Power supply +3.3V	75	D11	I/O	
36	DM1	I/O	USB D- data	76	D12	I/O	
37	DP1	I/O	USB D+ data	77	D13	I/O	
38	GND	-	Ground	78	D14	I/O	
39	DM0	I/O	USB D- data	79	D15	I/O	
40	DP0	I/O	USB D+ data	80	GND	-	Ground

● SWL01U (YA876A01) CPU

DMLCD: IC001

PIN NO.	NAME	I/O	FUNCTION	PIN NO.	NAME	I/O	FUNCTION
1	NC	-	Connection to the GND	89	NC	-	Connection to the GND
2	NC	-		90	NC	-	
3	EA3/PD3/KYN24	I	ON/OFF signal from the keyboard	91	MD03	I/O	External memory data bus
4	EA2/PD2/KYN23	I		92	MD11	I/O	
5	EA1/PD1/KYN22	I		93	MD04	I/O	
6	EA0/PD0/KYN21	I		94	MD12	I/O	
7	ED0/PC0/KYN11	I/O	Key selection signal to the keyboard	95	MD05	I/O	
8	ED1/PC1/KYN12	I/O		96	MD13	I/O	
9	ED2/PC2/KYN13	I/O		97	MD06	I/O	
10	ED3/PC3/KYN14	I/O		98	MD14	I/O	
11	ED4/PC4/KYN15	I/O		99	MD07	I/O	
12	ED5/PC5/KYN16	I/O		100	MD15	I/O	
13	ED6/PC6/KYB05	I/O		101	VSS	-	Digital Core ground
14	ED7/PC7/KYB06	I/O		102	CS50RDN/PE4/RCLK	O	Priority of setup) PE4 > RCLK(SDRAM) > CS50RDN
15	PROTN	I	Determines if the product is a prototype	103	MA17	O	External memory address
16	BISTMD	I	Memory BIST mode (1: BIST mode)	104	MA23	O	
17	BISTCLK	I	Memory BIST clock	105	MA16	O	
18	PLLBPN	I	PLL bypass mode (0: PLL bypass)	106	MA15	O	
19	TESTN	-	Test mode	107	MA14	O	
20	VSS	-	Digital Core ground	108	MA13	O	
21	XI	I	Crystal oscillator input (33.8688 MHz)	109	MA12	O	
22	XO	O	Crystal oscillator output	110	MA11	O	
23	VDD	-	Digital Core power supply	111	VDD	-	Digital Core power supply
24	VSS	-	Digital Core ground	112	IOVDD	I/O	I/O power supply
25	IOVDD	I/O	I/O power supply	113	MA10	O	External memory address
26	TRSTN	I	JTAG I/F reset	114	MA09	O	
27	TMS	I	JTAG I/F mode	115	MA20	O	
28	TCK	I	JTAG I/F clock	116	MA21/PF1	O	
29	TDI	I	JTAG I/F input	117	MA22/PF2	O	
30	TDO	I	JTAG I/F output	118	MA19	O	
31	VDD	-	Digital Core power supply	119	MA18	O	
32	PLLVDD	-	Digital PLL power supply (common with Core power supply inside)	120	MA08	O	
33	VSS	-	Digital Core ground	121	MA07	O	
34	PLLVSS	-	Digital PLL ground (common with Core ground inside)	122	MA06	O	
35	WCLK/SYO	O	Word clock (1 Fs = 44.1 kHz)	123	MA05	O	
36	PFO	O	Output-only port	124	MA04	O	
37	SDO1	O	Audio output data (with EQ & compressor)	125	MA03	O	
38	SDO0	O	(SWL01 equivalent output data)/Selection signal to the keyboard	126	MA02	O	
39	BCLK	O	Bit clock (64Fs)	127	MA00	O	
40	SYSCLK/PG3	O	System clock (256Fs/384Fs/768Fs)	128	CS1N/PG1	O	Chip select for area 3
41	SDI/PH3	I	Serial audio input data	129	VSS	-	Digital Core ground
42	VSS	-	Digital Core ground	130	ICN	I	Reset
43	IRQON/PHO	I	Interrupt input	131	VSS	-	Digital Core ground
44	NC	-	Connection to the GND	132	NC	-	Connection to the GND
45	NC	-		133	NC	-	
46	NC	-		134	NC	-	
47	NC	-		135	PA0	I/O	Universal I/O port
48	TXD0/PG4	O	Serial port I/F	136	PA1	I/O	
49	RXD0/PH4	I	Serial port I/F	137	PA2	I/O	
50	TXD1/PG2	O	Serial port I/F	138	PA3	I/O	
51	RXD1/PH1	I	Serial port I/F	139	PA4	I/O	
52	SCLK1/PH2	I	Serial port I/F	140	PA5	I/O	
53	UCTL	I	Fixed L when USB is in use/Fixed H when not in use	141	PA6	I/O	
54	VDD	-	Digital Core power supply	142	PA7	I/O	
55	VSS	-	Digital Core ground	143	PB0	I/O	
56	AVDD	-	Analog power supply	144	PB1	I/O	
57	AVREF	I	ADC reference	145	PB2	I/O	
58	AN0	I	ADC input	146	PB3	I/O	
59	AN1	I		147	PB4	I/O	
60	AN2	I		148	PB5	I/O	
61	AN3	I		149	PB6	I/O	
62	AGNDREF	I	ADC ground reference	150	PB7	I/O	
63	AVSS	-	Analog ground	151	IOVDD	I/O	I/O power supply
64	USBVDD	-	USB I/O power supply 1.8v (Pullup when not in use)	152	VSS	-	Digital Core ground
65	FUNC_DM	I/O	USB data -	153	VDD	-	Digital Core power supply
66	FUNC_DP	I/O	USB data +	154	WRN/PF5/WEN	O	Priority of setup) PF5 > WEN(SDRAM) > WRN
67	USBVSS	-	USB I/O ground	155	UBN/PF7/UDQM	O	Priority of setup) PF7 > UDQM(SDRAM) > UBN
68	USBIOVDD	-	USB I/O power supply 3.3v (Pullup when not in use)	156	LBN/PF6/LDQM	O	Priority of setup) PF6 > LDQM(SDRAM) > LBN
69	VSS	-	Digital Core ground	157	CS2N/PE0/KYB07	O	Chip select for area 4
70	VDD	-	Digital Core power supply	158	CS3N/PE1/KYB08	O	Chip select for area 5
71	XI_UCLK	I	Crystal oscillator input (48 MHz)	159	CS4N/PE2	O	Chip select for area 6
72	XO_UCLK	O	Crystal oscillator output	160	CS5N/PE3/KYB09	O	Chip select for area 7
73	VSS	-	Digital Core ground	161	CS51WRN/PE5/KYB12	O	For luminescent keyboard
74	IOVDD	I/O	I/O power supply	162	CS52WRN/PE6/KYB13	O	
75	VBUS	I	USB Vbus	163	CS53WRN/PE7	O	
76	PULLUPE	O	USB Pullup enable	164	PF3	O	Output-only port
77	CS0N/PG0	O	Chip select for area 2	165	PJ5	O	Used as key selection signal to the keyboard
78	RDN/PF4	O	External memory read signal	166	PJ4/KYB11	O	
79	MA01	O	External memory address	167	PJ3/KYB01	O	
80	MD00	I/O	External memory data bus	168	PJ2/KYB04	O	
81	MD08	I/O		169	PJ1/KYB03	O	
82	MD01	I/O		170	PJ0/KYB02	O	
83	MD09	I/O		171	VSS	-	Digital Core ground
84	MD02	I/O		172	ECSN	I	Chip select input from external CPU
85	MD10	I/O		173	EWRN/PD5/KYN26	I	Write enable input from external CPU
86	NC	-	Connection to the GND	174	ERDN/PD4/KYN25	I	Read enable input from external CPU
87	NC	-		175	NC	-	Connection to the GND
88	NC	-		176	NC	-	

- **NT3881DFG-01** (X3148A0R) **LCD DRIVER**
- **ML9040A-B01GAZ03A** (XZ987A0R) **LCD DRIVER**
- **SPLC780D1-001A-HQ1** (YC471A00) **LCD DRIVER**

DMLCD: IC601

PIN NO.	NAME	I/O	FUNCTION	PIN NO.	NAME	I/O	FUNCTION
1	S22	O		41	DB2	I/O	
2	S21	O		42	DB3	I/O	
3	S20	O		43	DB4	I/O	Data interface
4	S19	O		44	DB5	I/O	
5	S18	O		45	DB6	I/O	
6	S17	O		46	DB7	I/O	
7	S16	O		47	C1	O	
8	S15	O		48	C2	O	
9	S14	O		49	C3	O	
10	S13	O		50	C4	O	
11	S12	O	Segment signal output for LCD	51	C5	O	
12	S11	O	driving	52	C6	O	
13	S10	O		53	C7	O	
14	S9	O		54	C8	O	Common signal output for LCD
15	S8	O		55	C9	O	driving
16	S7	O		56	C10	O	
17	S6	O		57	C11	O	
18	S5	O		58	C12	O	
19	S4	O		59	C13	O	
20	S3	O		60	C14	O	
21	S2	O		61	C15	O	
22	S1	O		62	C16	O	
23	Vss		Ground	63	S40	O	
24	OSC1	I	Oscillator	64	S39	O	
25	OSC2	O	Oscillator	65	S38	O	
26	V1			66	S37	O	
27	V2			67	S36	O	
28	V3		Power supply	68	S35	O	
29	V4			69	S34	O	
30	V5			70	S33	O	
31	CLK1	O	Data latch clock	71	S32	O	Segment signal output for LCD
32	CLK2	O	Data shift clock	72	S31	O	driving
33	Vdd		Power supply (+5 V)	73	S30	O	
34	M	O	Altamated signal for LCD driver outout	74	S29	O	
35	D	O	Display data interface	75	S28	O	
36	RS	I		76	S27	O	
37	R/W	I	Read/write	77	S26	O	
38	E	I	Enable	78	S25	O	
39	DB0	I/O	Data interface	79	S24	O	
40	DB1	I/O	Data interface	80	S23	O	

- **AK4385ET** (X6040A01) **DAC** (Digital to Analog Converter)

DMLCD: IC201

PIN NO.	NAME	I/O	FUNCTION	PIN NO.	NAME	I/O	FUNCTION
1	MCLK	I	Master Clock	9	AOUTR-	O	Rch Analog out(-)
2	BICK	I	Audio Serial Data Clock	10	AOUTR+	O	Rch Analog out(+)
3	SDTI	I	Audio Serial Date Input	11	AOUTL-	O	Lch Analog out(-)
4	LRCK	I	L/R Clock	12	AOUTL+	O	Lch Analog out(+)
5	PDN	I	Power Down mode	13	Vss	-	Ground
6	CSN	I	Chip Select	14	VDD	-	Power Supply
7	CCLK	I	Control Data Input	15	DZFR	O	Rch Data Zero Input Detect
8	CDTI	I	Control Data Input	16	DZFL	O	Lch Data Zero Input Detect

■ CIRCUIT BOARDS

AMJK Circuit Board (YD800D0)..... 20
DMLCD Circuit Board (YD796C0, YE803A0) 18/19
MV Circuit Board (YD799C0)..... 17
PB Circuit Board (YD799C0)..... 17
PNC Circuit Board (YD799C0) 22
PNL Circuit Board (YD799C0)..... 22
PNP Circuit Board (YD799C0)..... 17
PNR Circuit Board (YD925C0) 21
TW Circuit Board (YD799C0) 17
61H-MK Circuit Board (X2335D0) 23
61L-MK Circuit Board (X2336C0)..... 23

Note: See parts list for details of circuit board component parts.
The DMLCD circuit boards "YD796C0" and "YE803A0" are shared parts.

● PNP Circuit Board

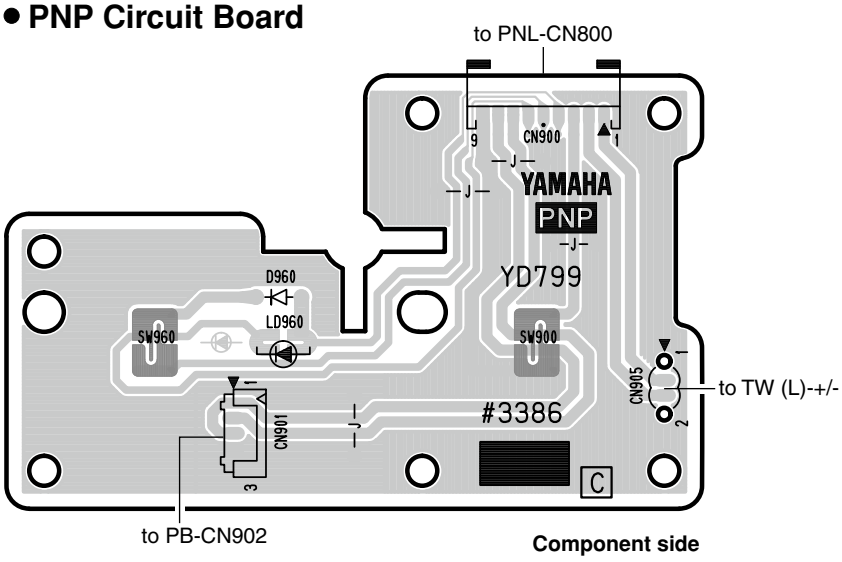

● TW Circuit Board

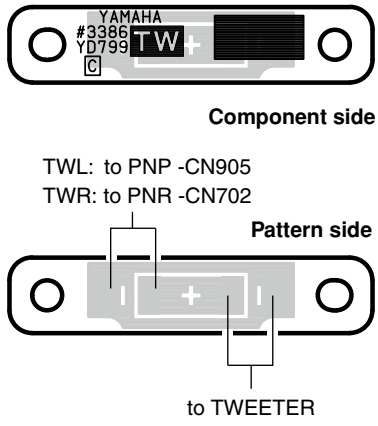

● MV Circuit Board

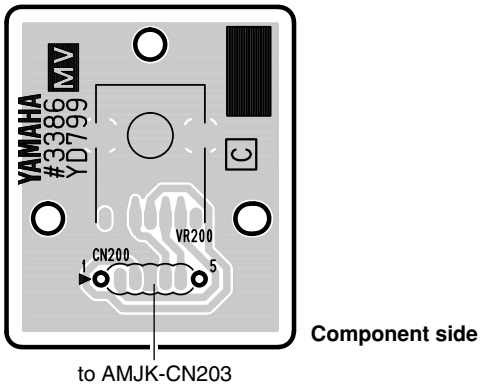

● PB Circuit Board

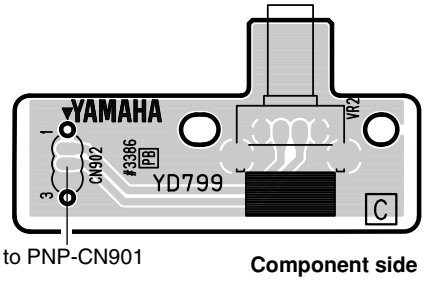

● DMLCD Circuit Board

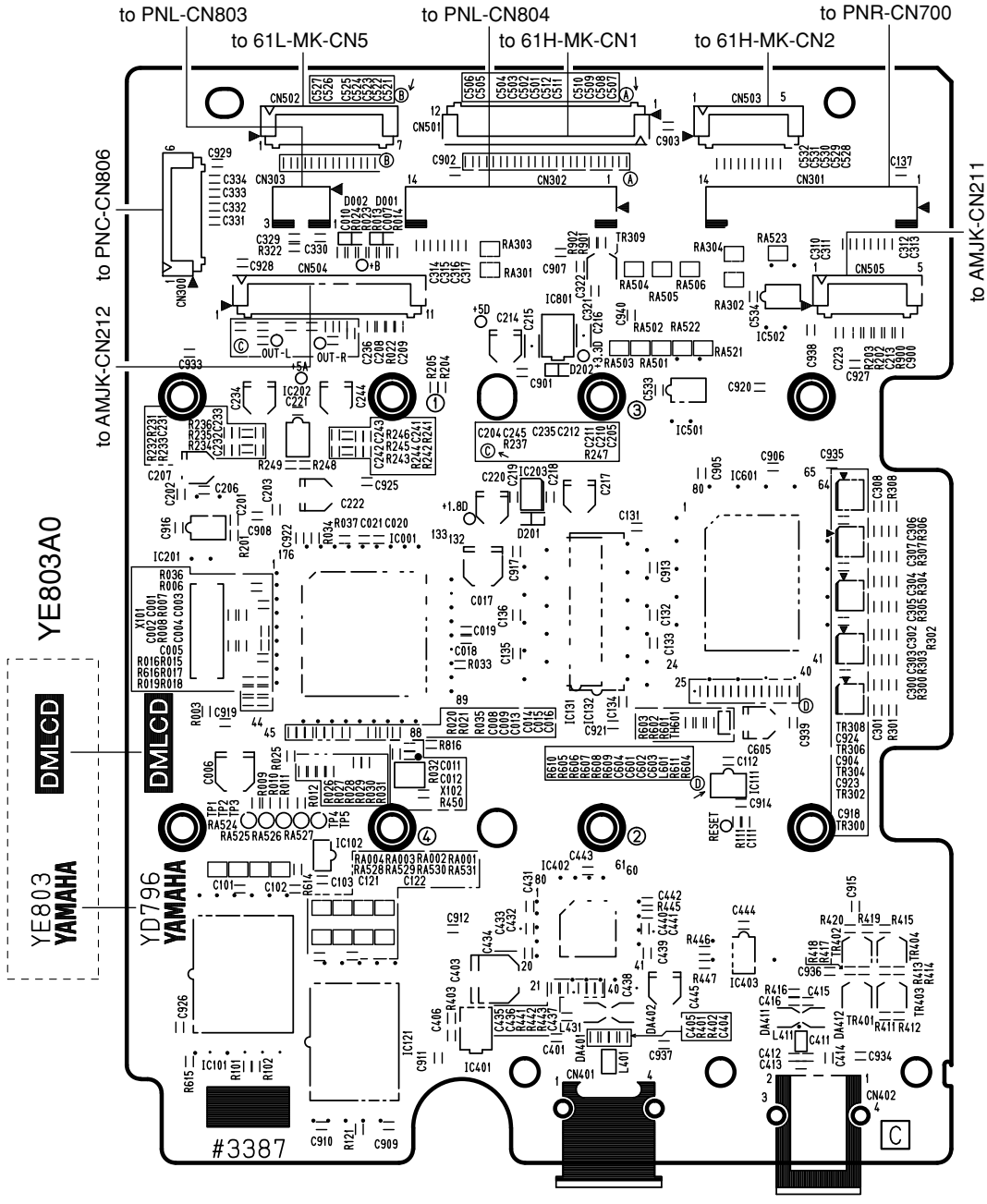

● DMLCD Circuit Board

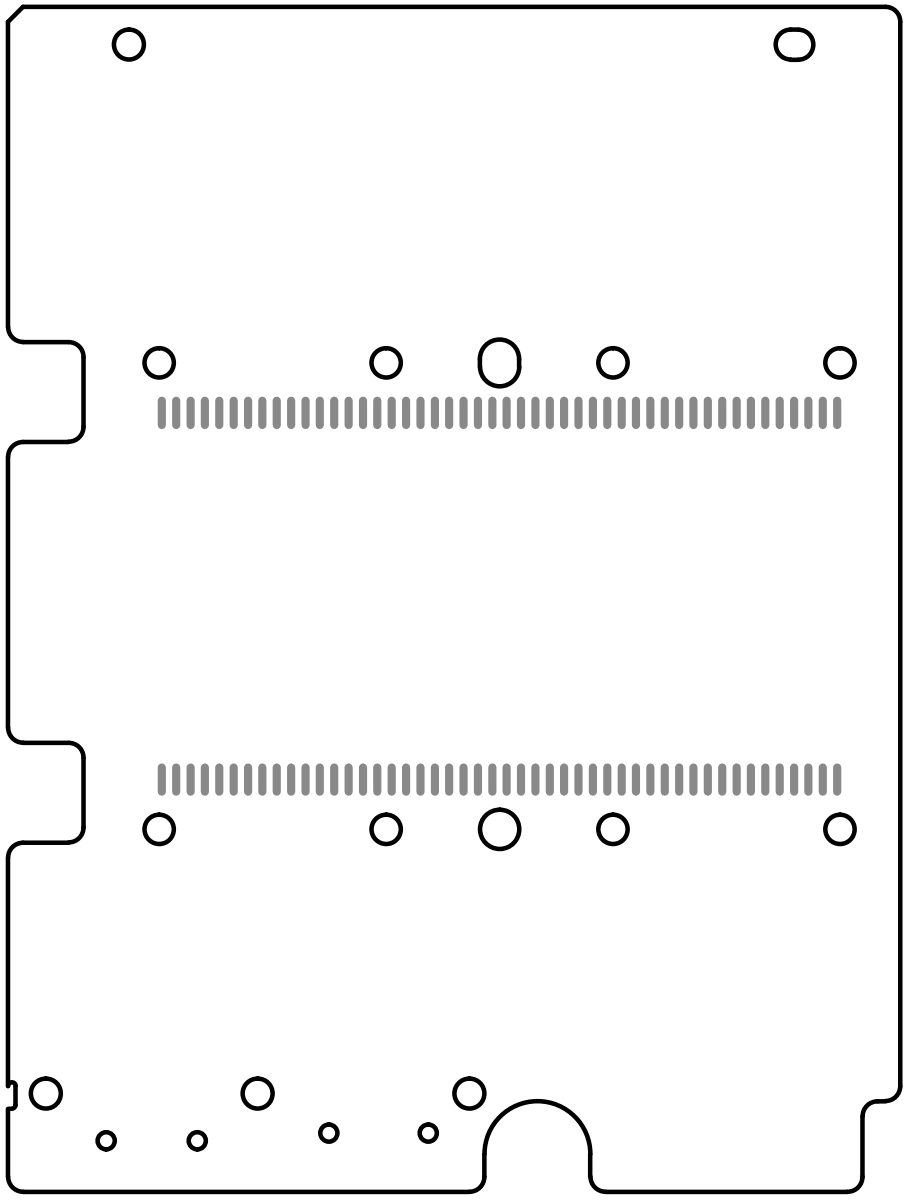

Pattern side

● AMJK Circuit Board

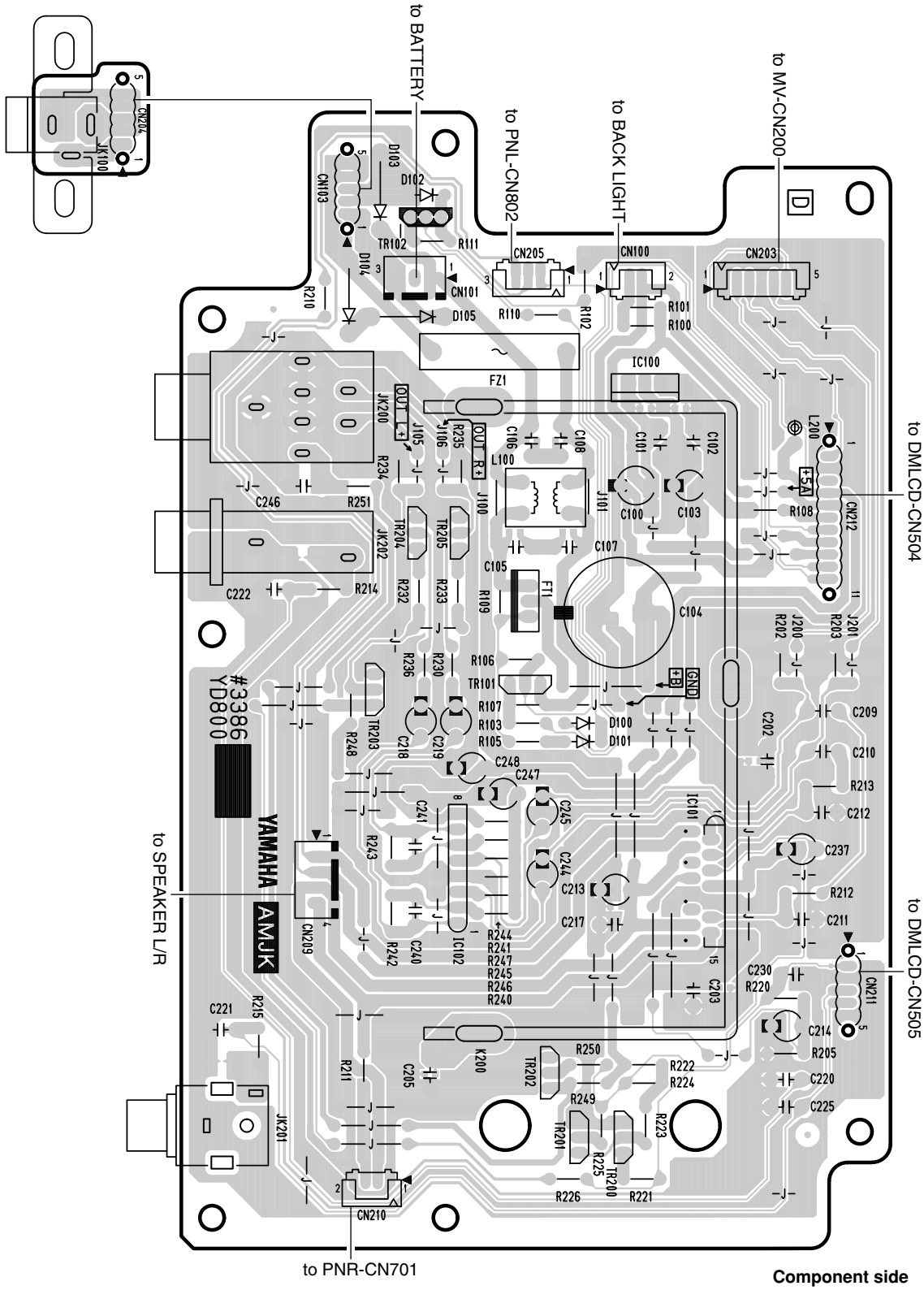

Component side

● PNR Circuit Board

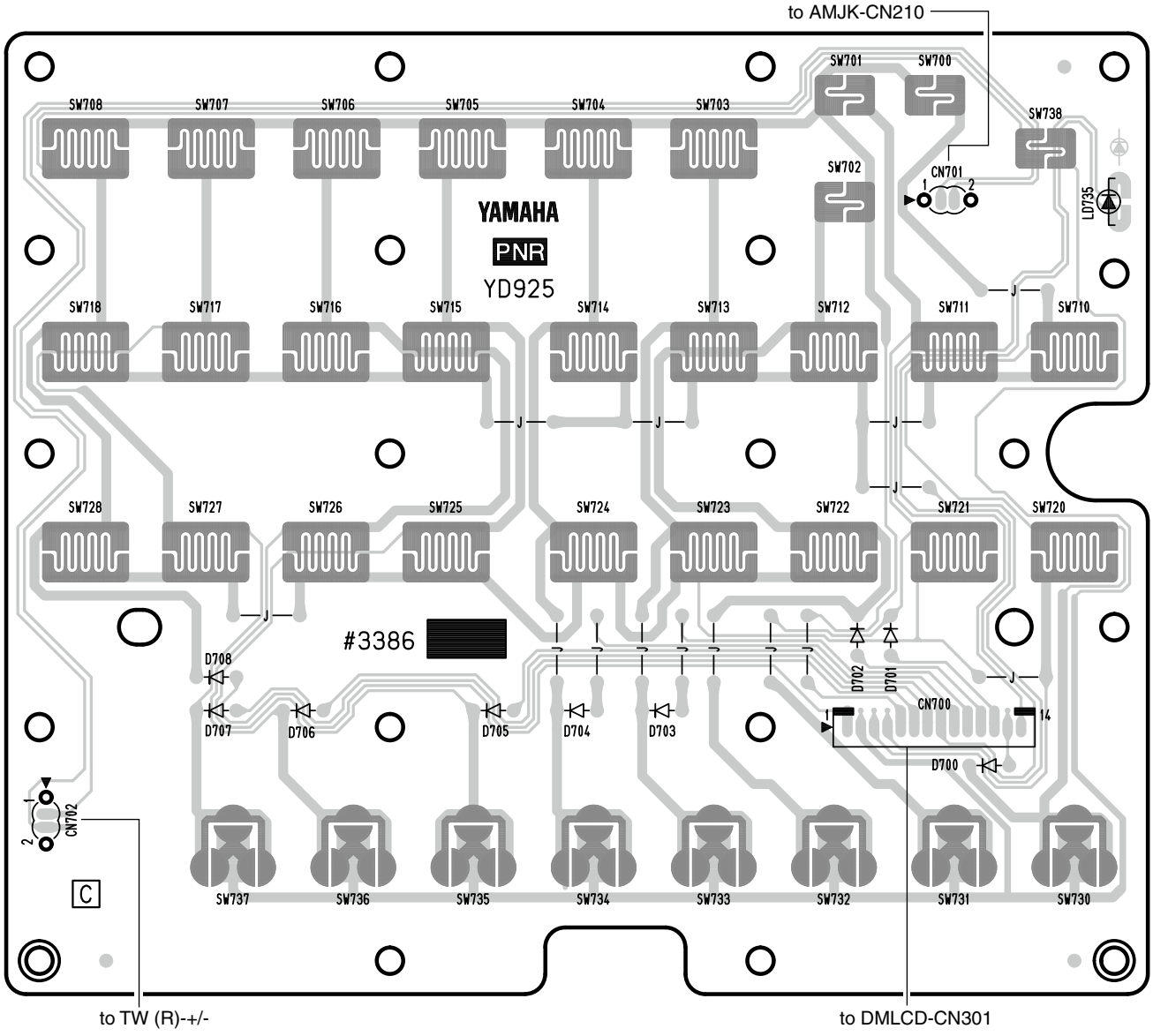

Component side

Scale: 90/100

● PNL Circuit Board

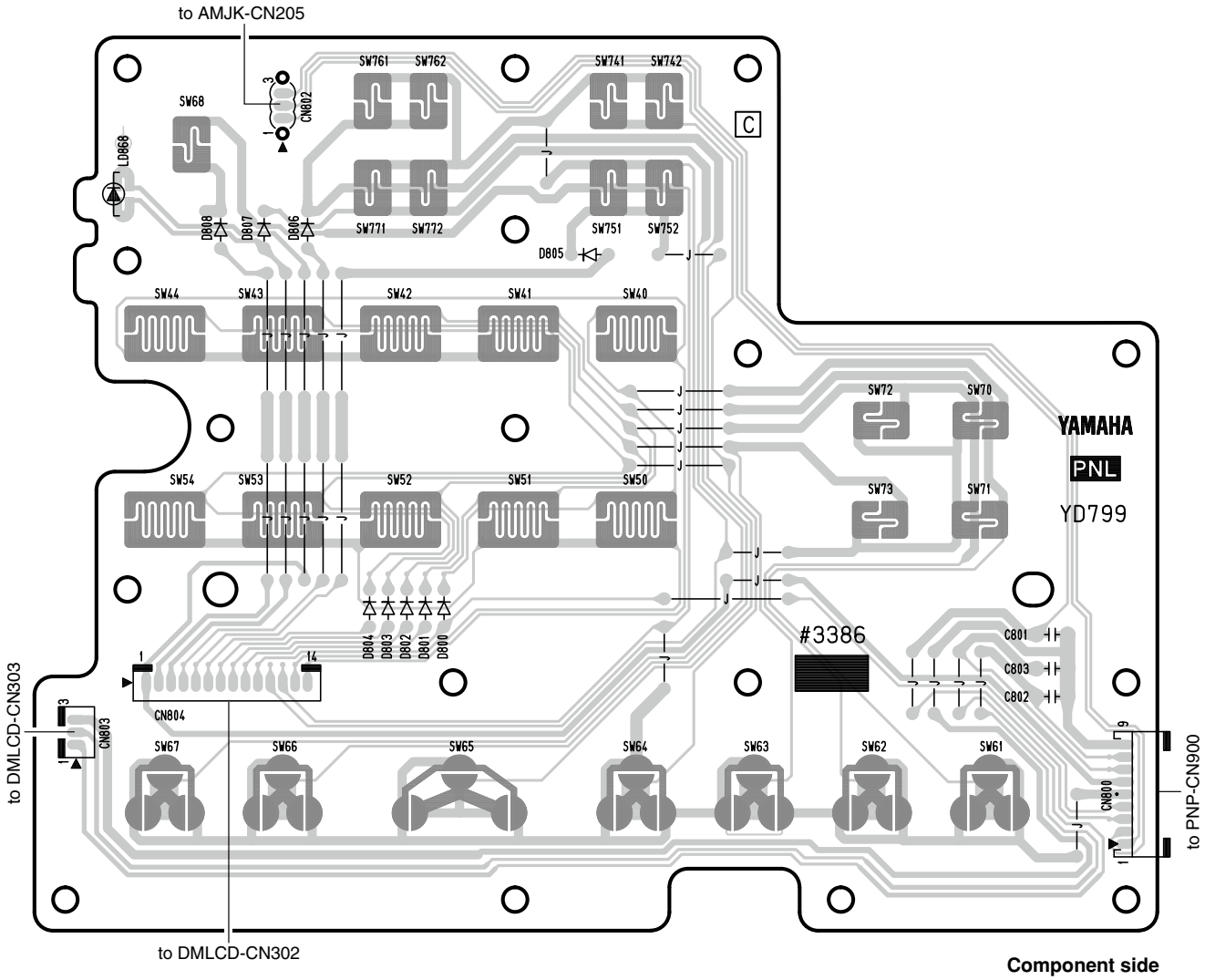

Component side

● PNC Circuit Board

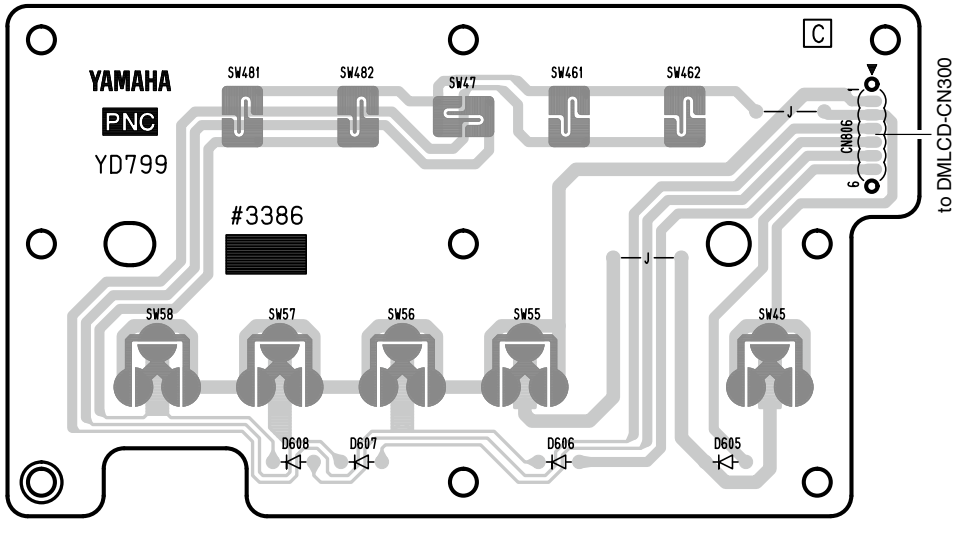

Component side

Scale: 70/100

● 61H-MK Circuit Board

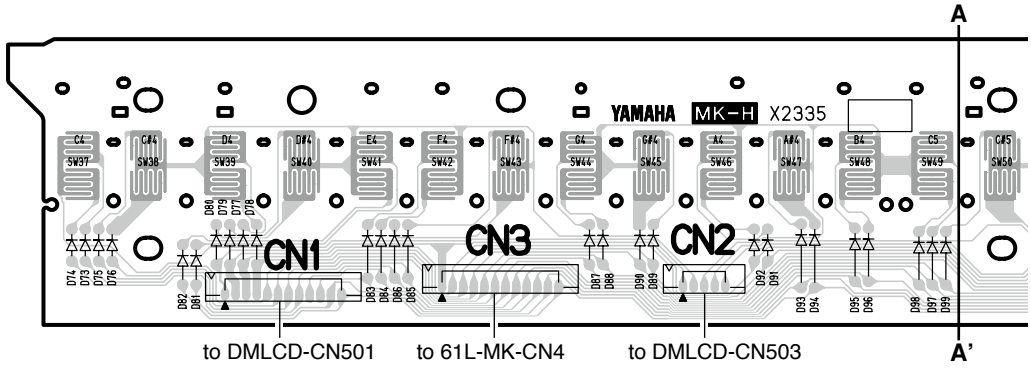

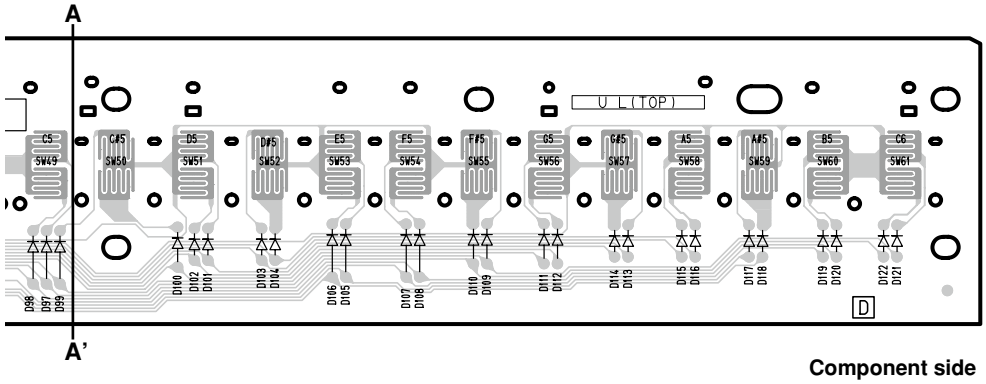

Component side

● 61L-MK Circuit Board

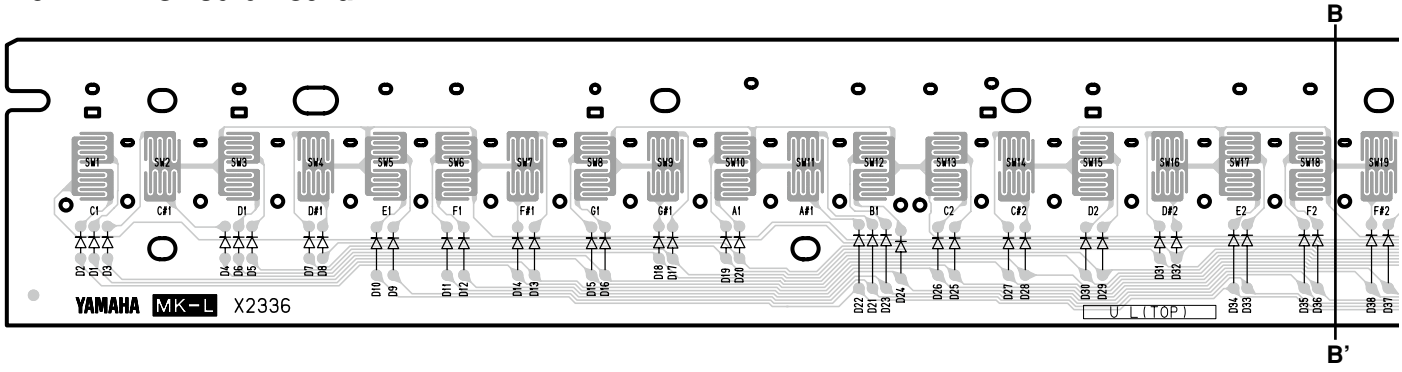

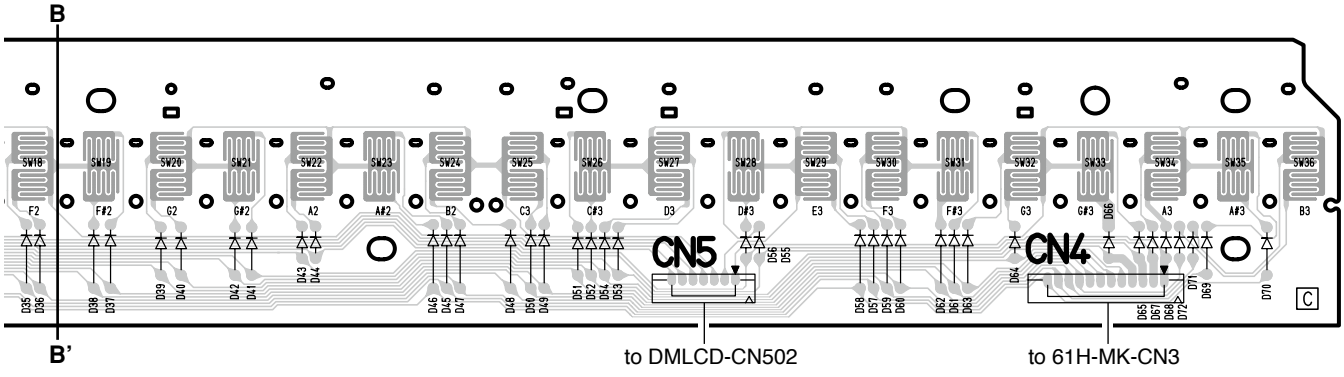

Component side

61H-MK:2NAKB-V869540
61L-MK: 2NAKB-V869520

TEST PROGRAM

*** If the test number 59 "Factory Set" is executed, the data already set will be lost.**

1 Preparations

1) Use an AC adaptor PA-150A.
2) Measuring device: Frequency counter, which can detect thousandth value or more, Level meter (with JIS-C filter), Oscilloscope
   Note: Use a stereo plug and connect a load resistor of 33 ohms to the [PHONES/OUTPUT] jack for measurement unless otherwise specified. Input impedance of the measuring device should be 1 M ohms or more.
3) Jig: Foot switch (FC-4 or FC-5), USB cable, EXP Pedal (Accessories), Batteries
4) Controller settings
   MASTER VOLUME : MAX
   PEDAL : OFF
   Others : Initial setting when the power is turned on

2 Starting up the Test Program

While holding down the keys [C#2], [F2] and [G#2] simultaneously, press the [⏻] (STANDBY / ON) switch.

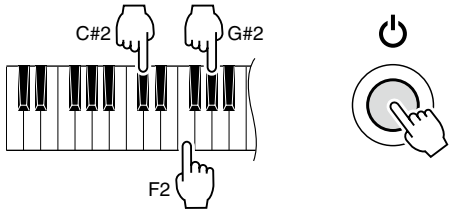

3 Test procedure

1) When the test program is started, "**TEST**" will be displayed on the LCD.
2) Press the [+/YES] or [–/NO] button to select a test program item.
3) Press the [START/STOP] button to execute the test.
4) See the "Switch test item list" on page 27 for the correlation between button names in the manual and the button names on the panel.

If the result is OK or test item is completed, press the [START/STOP] button again to return to the item selection display.
Press the [+/YES] or [–/NO] button to select the next test item.
A cursor ("_") is shown below the first character of the item for which the test results are OK.

If the result is NG, press the lowest key (white key C1) to return to the item selection display.

4 Test Program List

(dBu=dBm)

TEST No	LCD display	Test descriptions, judging conditions, etc.
1	**Version** **001**	Displays version of the ROM. Using the voice switches, each data version can be displayed as follows. [二胡] Main Program Version Main: ✻✻✻ [琵琶] Boot Program Version Boot: ✻✻✻ [扬琴] Style Data Version Style: ✻✻✻ [笛子] Song Data Version Song: ✻✻✻ [唢呐] Voice Paramater Version Param: ✻✻✻ [拉弦组合奏] Wave Data Version Wave: ✻✻✻ 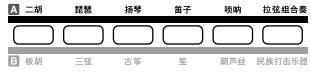 ✻✻✻ : Version The "Main" version is used as the version of ROM for management. You have only to check the "Main" version as the "Main" version will change if the version of Boot/Style/Song/Param/Wave is changed.
2	**Mem 1 All** **002**	Checks the ROM, RAM and FROM connected to the CPU bus. Make sure that "**Mem 1 OK**" is displayed on the LCD. When the result is OK, test No. 003, 004 and 005 can be omitted.
3	**Rom Chk1** **003**	Checks the ROM connected to the CPU bus. Make sure that "**Rom OK**" is displayed on the LCD.

TEST No	LCD display	Test descriptions, judging conditions, etc.
4	**Ram Chk1** **004**	Checks the RAM connected to the CPU bus. Make sure that "**Ram OK**" is displayed on the LCD.
5	**FRomChk1** **005**	Checks the FROM connected to the CPU bus. Make sure that "**FRom OK**" is displayed on the LCD.
8	**TG1 Chk** **008**	Plays each key automatically in the order of scale (auto-scaling). (32 notes from C2 to G4 will be played.) Make sure that there is no abnormal sounds or noise. When the auto-scaling is finished, "**TG1 End**" will be shown. Press a key to play a sound. (Single note, the key pressed first will be played)
9	**Pit Chk** **009**	Checks pitch accuracy. Connect the frequency counter to the [PHONES/OUTPUT] jack. (Either L or R) Make sure that the correct signal is output. (441.0 Hz ± 0.2 Hz) **Amount of volume decay** Connect the level meter (with JIS-C filter) to the L/R of the [PHONES/OUTPUT] jack. (33 ohms load) Turn the [MASTER VOLUME] to the minimum and measre the amount of volume decay. · PHONES L, R: -70 dBu or less
11	**Output R** **011**	Connect the level meter (with JIS-C filter) to the L/R of the [PHONES/OUTPUT] jack. (33 ohms load) Set the [MASTER VOLUME] to the maximum level and check the output level. · PHONES L: -55.0 dBu or less · PHONES R: -8.4 dBu ± 2 dB
12	**Output L** **012**	Connect the level meter (with JIS-C filter) to the L/R of the [PHONES/OUTPUT] jack. (33 ohms load) Set the [MASTER VOLUME] to the maximum level and check the output level. · PHONES L: -8.4 dBu ± 2 dB · PHONES R: -55.0 dBu or less
22	**SW Chk** **022**	Checks the switches and LEDs on the panel. Press the switches as shown in the LCD. When a switch is pressed, a sound is played at the prescribed pitch. (Refer to the Switch Test Item List on page 27.) When a switch with LED is turned on, the LED will light up. Make sure that "**SW OK**" is displayed on the LCD when all the switches are pressed as indicated. To cancel the operation halfway, press the lowest key (white key C1) to return to the item selection display.
23	**A. LED On** **023**	Make sure that all the LEDs on the panel are turned on.
29	**LCD On** **029**	Make sure that all the dots on the LCD are turned on.
30	**LCD Off** **030**	Make sure that all the dots on the LCD are turned off.
34	**PD1 Chk** **034**	Connect a footswitch (FC-4 or FC-5) to the [SUSTAIN] jack. Check that C3 sound is played when the [START/STOP] button is pressed with the pedal depressed (On) to start the test and that C4 sound is played when the pedal is released (Off). The sound will stop when the pedal is depressed again. Make sure that "**PD1 OK**" is displayed on the LCD.
36	**PD3 Chk** **036**	Connect an expression pedal (EP-1) to the [EXP. PEDAL] jack. Check that C3 sound is played when the [START/STOP] button is pressed with the pedal depressed (On) to start the test and that C4 sound is played when the pedal is released (Off). The sound will stop when the pedal is depressed again. Make sure that "**PD3 OK**" is displayed on the LCD.
38	**PB Chk** **038**	C3 is played when the [PITCH BEND] wheel is turned toward you to the minimum position (DW), and C4 is played when the wheel is turned away from you to the maximum position (UP). Make sure that "**PB OK**" is displayed on the LCD. PB C: "064" PB DW: "000" PB UP: "127"
40	**MIDI Chk** **040**	Connect a PC which has installed the driver and main unit [USB] terminal with a USB cable. Set the through mode on PC and execute the test. Confirm that the C4 note is output and "**MIDI OK**" is displayed on the LCD.

TEST No	LCD display	Test descriptions, judging conditions, etc.
41	**Conn Chk** **041**	Enter the test with the [START/STOP] button and "**Conn C1**" will be displayed on the LCD. When a USB cable is connected to the [USB TO DEVICE] and [USB TO HOST] terminals, "**Conn C2**" is displayed on the LCD. Disconnect the USB cable from the [USB TO DEVICE] and [USB TO HOST] terminals and then connect a USB storage device to [USB TO DEVICE] terminal. Confirm that the C4 note is output and "**Conn OK**" is displayed on the LCD.
42	**Strg Chk** **042**	Connect a USB storage device to the [USB TO DEVICE] terminal and press the [START/STOP] button to execute the test. Make sure that "**Strg OK**" is displayed on the LCD.
43	**Adpt Chk** **043**	Checks the function to detect connection/disconnection of the AC adaptor. 1. **"Adpt Out"** is displayed on the LCD when the test is executed. 2. **"Adpt In"** is displayed on the LCD when the AC adaptor is removed from the [DC IN] jack. 3. Insert the AC adaptor into the [DC IN] jack. 4. Make sure that the C4 sound is produced and **"Adpt OK"** is displayed on the LCD.
54	**Rom Chk2** **054**	Checks the ROM connected to the CPU bus. Make sure that "**Rom OK**" is displayed on the LCD. It will take about 1 minutes for the check.
55	**Ram Chk2** **055**	Checks the RAM connected to the CPU bus. Make sure that "**Ram OK**" is displayed on the LCD.
56	**FRomChk2** **056**	Checks the FROM connected to the CPU bus. Make sure that "**FRom OK**" is displayed on the LCD. It will take about 2 minutes for the check.
59	**Factory** **059**	Initializes the entire backup area to reset to the factory default. "**Fact**" is displayed on the LCD during the test. "**Fact End**" is displayed on the LCD when the test is finished.
60	**TestExit** **060**	This will leave the test program and change to the play mode.

• Other Tests

Noise Level Check

Connect the level meter (with JIS-C filter) to the L/R of the [PHONES/OUTPUT] jack. (33 ohms load)
Set the [MASTER VOLUME] to the maximum level and check the noise level.
· PHONES L, R: –70 dBu or less

Popping Noise Check

Connect the oscilloscope to the L/R of the [PHONES/OUTPUT] jack and turn on and then off the [STANDBY/ON] switch. Make sure that popping noise level is 1.0 Vp-p or less, and that no abnormal sound or popping noise is output from the speakers.

Switch test item list

Turn	SW Name	LCD Display	Note Number
1	示范乐曲	Demo	C2
2	力度	Touch	C#2
3	USB	USB	D2
4	混响	Reverb	D#2
5	伴奏音量 [+]	A-VOL UP	E2
6	伴奏音量 [-]	A-VOL DW	F2
7	速度 [+]	Temp UP	F#2
8	速度 [-]	Temp DW	G2
9	伴奏型	Style AB	G#2
10	8 拍子	8BEAT	A2
11	叙事曲	BALLAD	A#2
12	摇滚乐	ROCK	B2
13	迪斯科	DISCO	C3
14	中国流行	GD WUSHI	C#3
15	伦巴	RUMBA	D3
16	波沙诺瓦	BOSSANVA	D#3
17	进行曲	MARCH	E3
18	华尔兹	WALTZ	F3
19	节拍器	METRO.	F#3
20	[-/ 否]	-/NO	G3
21	功能	Function	G#3
22	[+/ 是]	+/YES	A3
23	音色	Voice AB	A#3
24	延音	Sustain	B3
25	双音色	Dual	C4
26	音色分割	Split	C#4
27	二胡	ERHU	D4
28	琵琶	PIPA	D#4
29	扬琴	YANGQIN	E4
30	笛子	DIZI	F4
31	唢呐	SUONA	F#4
32	拉弦组合奏	ENSEMBLE	G4
33	钢琴	PIANO	G#4
34	古钢琴	HARPSI.	A4
35	风琴	C.ORGAN	A#4
36	手风琴	ACCORD	B4

Turn	SW Name	LCD Display	Note Number
37	振琴	VIBES	C5
38	弦乐 1	STRINGS1	C#5
39	小提琴	VIOLIN	D5
40	长笛	FLUTE	D#5
41	单簧管	CLARINET	E5
42	双簧管	OBOE	F5
43	小号	TRAMPET	F#5
44	圆号	HORN	G5
45	铜管合奏	BRASS	G#5
46	竖琴	HARP	A5
47	合成主奏	SYN LEAD	A#5
48	原声吉他	ACO.GTR	B5
49	贝司	BASS	C6
50	声音效果 /XG	SE/XG	C#6
51	和弦伴奏开 / 关	ACMP	D6
52	同步停止	S.Stop	D#6
53	同步起动	S.Start	E6
54	前奏 / 尾声	Intro	F6
55	起动 / 停止	Str/Stp	F#6
56	主奏 / 自动插入 A	Main A	G6
57	主奏 / 自动插入 B	Main B	G#6
58	存储	Memory	A6
59	注册存储 [1]	Regist 1	A#6
60	注册存储 [2]	Regist 2	B6
61	注册存储 [3]	Regist 3	C7
62	注册存储 [4]	Regist 4	C#7
63	乐曲编号	Song No.	D7
64	录音	REC	D#7
65	乐曲 [1]	Song 1	E7
66	乐曲 [2]	Song 2	F7
67	乐曲 [3]	Song 3	F#7
68	乐曲 [4]	Song 4	G7
69	乐曲 [5]	Song 5	G#7
70	乐曲 [A]	Song A	A7
71	PORTAMENTO	Portamen	A#7

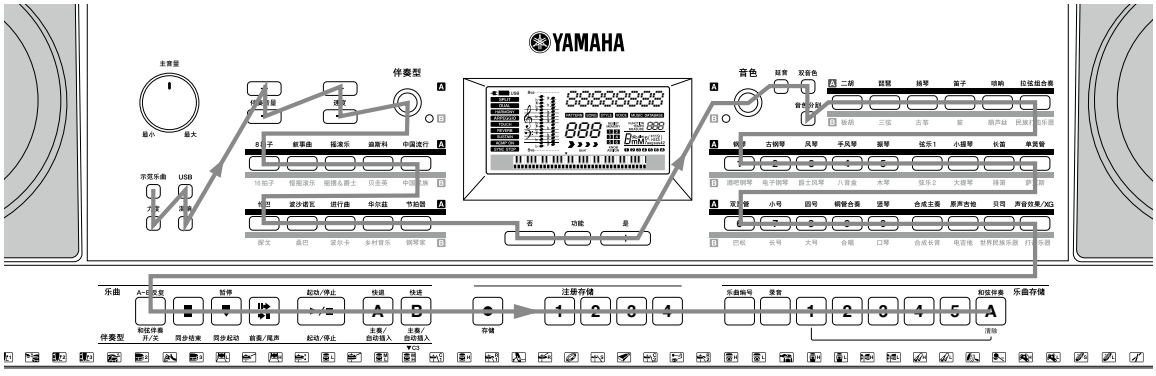

USER DATA BACKUP

To backup user data to external devices, use the “Musicsoft Downloader”.
You can use the Musicsoft Downloader to transfer “Backup Data”, “External Song”, “External Style” including the five User Songs stored on the instrument, to a computer.

List of data that can be backed up

- Registration Memory
- Tuning
- Pitch Bend Range
- Touch Response On/Off
- Touch Response Sensitivity
- Split Point
- Style Volume
- Song Volume
- Portamento Time
- Freeze Mode On/Off
- Battery Type
- User Songs (Songs recorded on this instrument)
- Style No. 191 (Loaded Style data)

PREPARATION

PC (Personal Computer)
AB type USB cable of less than about 3 meters
MIDI-USB Driver *1
Musicsoft Downloader (MSD) *1

*1: Obtain these programs Yamaha official website.
URL>> http://www.downlead.yamaha.com/

Install these software in PC beforehand.

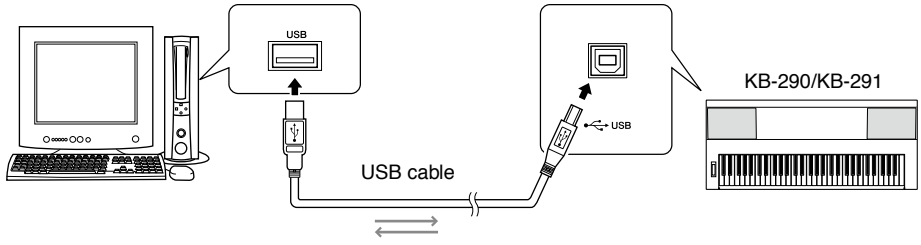

BACKUP PROCEDURE

1. Turn off the power of the instrument.
2. End all the application software.
3. Exit from any power-saving mode of the computer (such as suspended, sleep, standby).
4. Connect the instrument to the PC with a USB cable.
5. Turn on the power of the instrument.
6. Click the Control Panel on PC.
7. Click "USB-MIDI Driver" on the Control Panel to open the dialog box.
8. Remove the check from the check box next the word "Thru ON/OFF" in the dialog box.
9. Start up the Musicsoft Downloader.
10. If you click "Electronic Musical Instruments" in the Musicsoft Downloader display, and then "System Drive", a file named "KB-290.BUP" will appear in the lower right corner of the Musicsoft Downloader display.
    This is the backup file. For details about how to transmit backup file using the Musicsoft Downloader application, refer to the Online help in the application.

NOTE: Preset Song data cannot be transmitted from the instrument.
While the computer is connected to the instrument, you should wait for six seconds or more between these operations: (1) when turning the power of the instrument off then on again, or (2) when alternately connecting/disconnecting the USB cable.

- The backup data, including the five User Songs is transmitted/received as a single file. As a result, all backup data will be overwritten every time you transmit or receive. Keep this in mind when transferring data.
- We recommend that you use a power adaptor rather than batteries when transferring data. The data can be corrupted if the batteries fail during the transfer.
- Do not rename the backup file on the computer. If you do so, it will not be recognized when transferred to the instrument.

INITIALIZATION

This function erases backed up settings and backed up Song/Style data independently and restores the initial default settings.

Initializing the Settings

All backup data (not including the Song and Style files transferred from a computer) can be initialized to the factory default settings. To do this, simultaneously hold down the highest key and turn on the power. "BackUp CLr" appears briefly on the display.

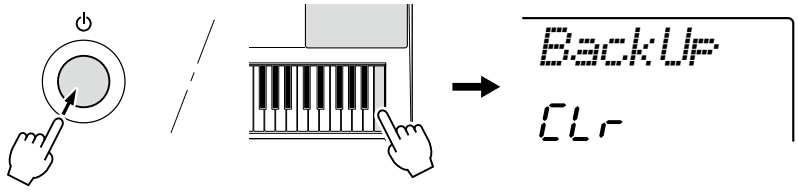

Deleting the Song and Style Files Transferred from a Computer

To clear all Songs and Styles transferred from a computer to the internal memory, simultaneously hold down the highest white key with the three highest black keys, and turn on the power. "Flash CLr" appears briefly on the display.

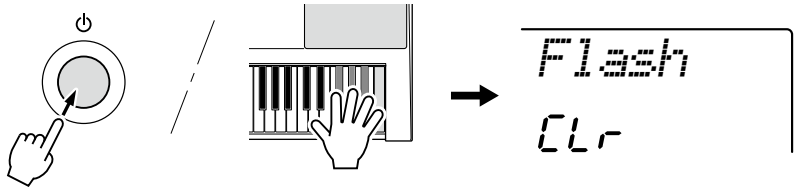

NOTE

- *When you execute the Flash Clear operation, data you have purchased will also be cleared. Be sure to save data you want to keep to a computer.*

SYSTEM BOOTING FLOWCHART

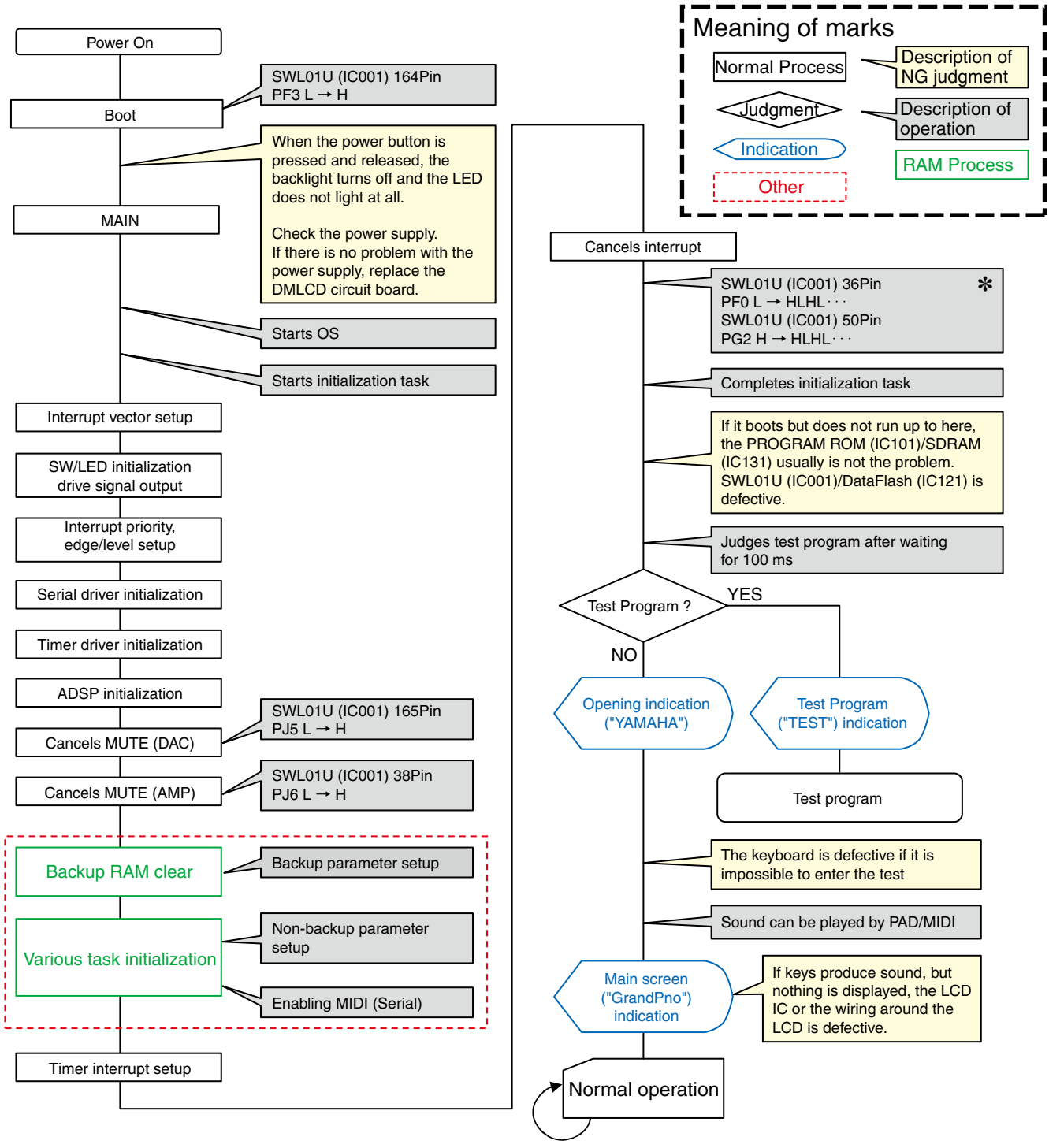

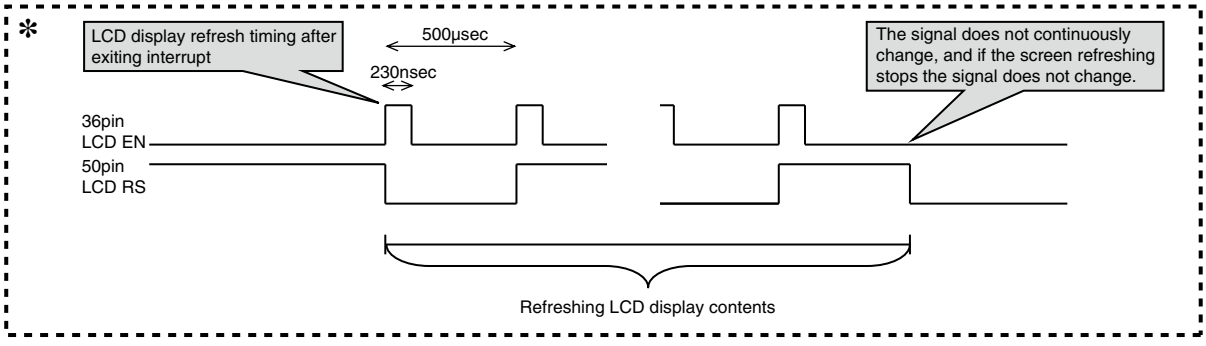

DMLCD CIRCUIT BOARD CHECK METHOD

The DMLCD Circuit Board is provided with test points for service check purposes.
Check the test points on the DMLCD Circuit Board if the following symptoms appear.

Symptoms and check items

① No LCD display with Power SW ON --> Check items 2 to 6 sequentially
② No sound or distorted sound --> Check items 1, 7 and 8

Test Point

NO.	Test Point	Circuit	Judgment criteria	Measured by	Parts with possible defects
1	+5A	5 V power for analog circuit	5V±0.2V	Multimeter	IC100 (On AMJK Circuit Board)
2	+5D	5 V power for digital circuit	5V±0.2V	Multimeter	IC100 (On AMJK Circuit Board)
3	+3.3D	3.3 V power for digital circuit	3.3V±0.1V	Multimeter	IC801
4	+1.8D	1.8 V power for digital circuit	1.8V±0.1V	Multimeter	IC203
5	RESET	CPU & memory reset signal	3.3V±0.3V	Multimeter	IC111
6	+B	Battery voltage detection	11V±1V	Multimeter	R108 or FT1 (On AMJK Circuit Board)
7	DAC-L	DAC output L channel	There shall be audio output without distortion.	Signal Checker	IC201 or IC202
8	DAC-R	DAC output R channel	There shall be audio output without distortion.	Signal Checker	IC201 or IC202

Note: Use the standard AC adapter PA-150A for check operation.

DMLCD Circuit Board (WZ269300)

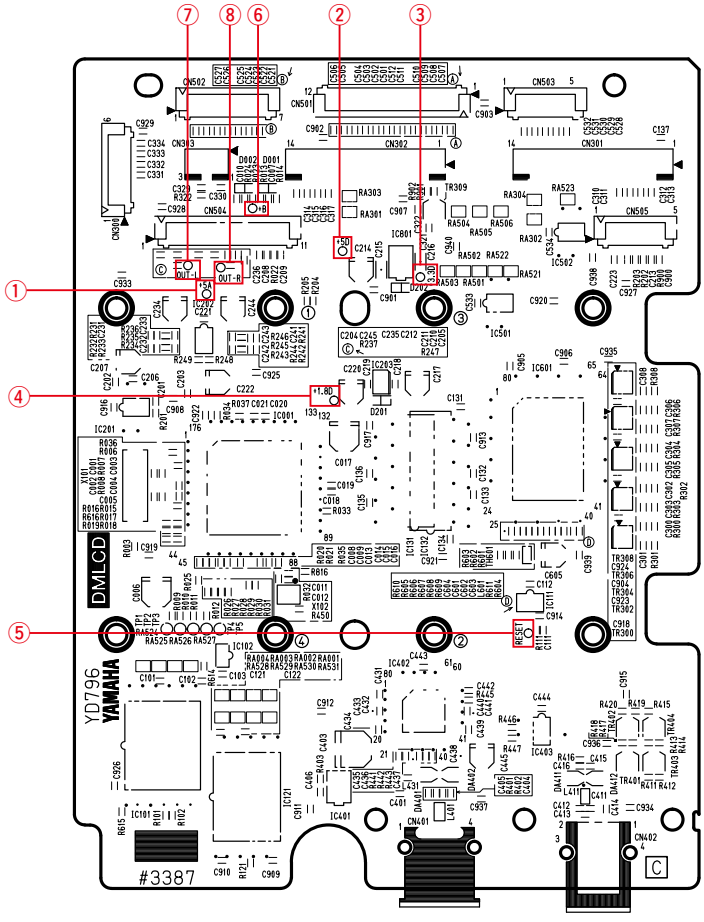

Component side

Digital Keyboard

KB-290

KB-291

PARTS LIST

■ CONTENTS

OVERALL ASSEMBLY 2
UPPER CASE ASSEMBLY 4
LOWER KEY BED ASSEMBLY 6
LOWER CASE ASSEMBLY 7
KEYBOARD ASSEMBLY 8
EXP PEDAL 9
ELECTRICAL PARTS 10–17

Notes : DESTINATION ABBREVIATIONS

A :	Australian model	M :	South African model
B :	British model	O :	Chinese model
C :	Canadian model	P :	Blazillian model
D :	German model	Q :	South-east Asia model
E :	European model	T :	Taiwan model
F :	French model	U :	U.S.A. model
H :	North European model	V :	General export model (110V)
I :	Indonesian model	W:	General export model (220V)
J :	Japanese model	N,X:	General export model
K :	Korean model	Y :	Export model

■ WARNING

Components having special characteristics are marked ⚠ and must be replaced with parts having specification equal to those originally installed.

- The numbers “QTY” show quantities for each unit.
- The parts with “--” in “PART NO.” are not available as spare parts.
- This mark “ } ” in the REMARKS column means these parts are interchangeable.
- The second letter of the shaded ( ) part number is O, not zero.
- The second letter of the shaded ( ) part number is I, not one.

■ OVERALL ASSEMBLY

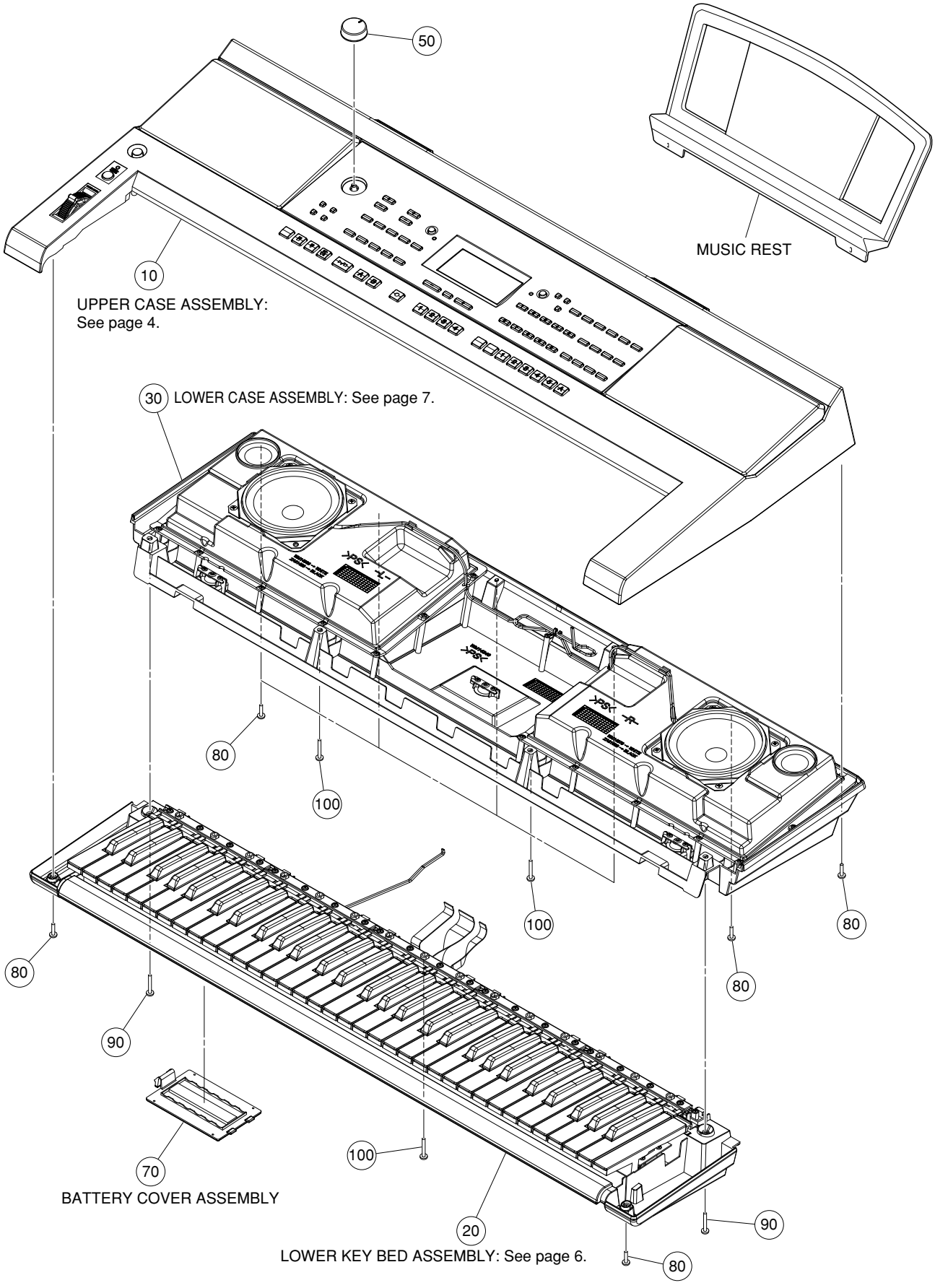

	REF NO.	PART NO.	DESCRIPTION		部品名	REMARKS		QTY	RANK
			OVERALL ASSEMBLY		総組立	KB-290/KB-291			
		--	OVERALL ASSEMBLY		総組立	KB-290	(ZA31090)		
		--	OVERALL ASSEMBLY		総組立	KB-291	(ZA32190)		
	10	--	UPPER CASE ASSEMBLY		上ケースAss'y	KB-290	(ZA30930)		
	10	--	UPPER CASE ASSEMBLY		上ケースAss'y	KB-291	(ZA32110)		
	20	--	LOWER KEY BED ASSEMBLY		下ケース鍵盤Ass'y		(ZA30680)		
	30	--	LOWER CASE ASSEMBLY		下ケースAss'y		(ZA30660)		
	50	**VU43240R**	KNOB V BLACK		Vツマミ	MASTER VOLUME			01
	70	**WR080100**	BATTERY COVER ASSEMBLY		電池蓋Ass'y				02
	80	**WE98740R**	BIND HEAD TAPPING SCREW-B	3.0X12 MFZN2W3	BタイトBIND			8	01
	90	**WF48930R**	BIND HEAD TAPPING SCREW-B	3.0X20 MFZN2W3	BタイトBIND			2	01
	100	**WF491001**	BIND HEAD TAPPING SCREW-B	3.0X16 MFZN2W3	BタイトBIND			3	01
		--	NAME PLATE	CHN	銘板ラベル	KB-290	(ZA31220)		
		--	NAME PLATE	CHN	銘板ラベル	KB-291	(ZA35760)		
			ACCESSORIES		付属品				
*		**ZC352300**	MUSIC REST GRAY WITH BAG		譜面板袋入り	KB-290			
*		**ZC352400**	MUSIC REST BLACK WITH BAG		譜面板袋入り	KB-291			
⚠		**WR527200**	AC ADAPTOR	PA-150A CHN	ACアダプター				
		VP622500	EXP PEDAL	EP-1	EXPペダル				

*: New Parts

RANK: Japan only

■ UPPER CASE ASSEMBLY

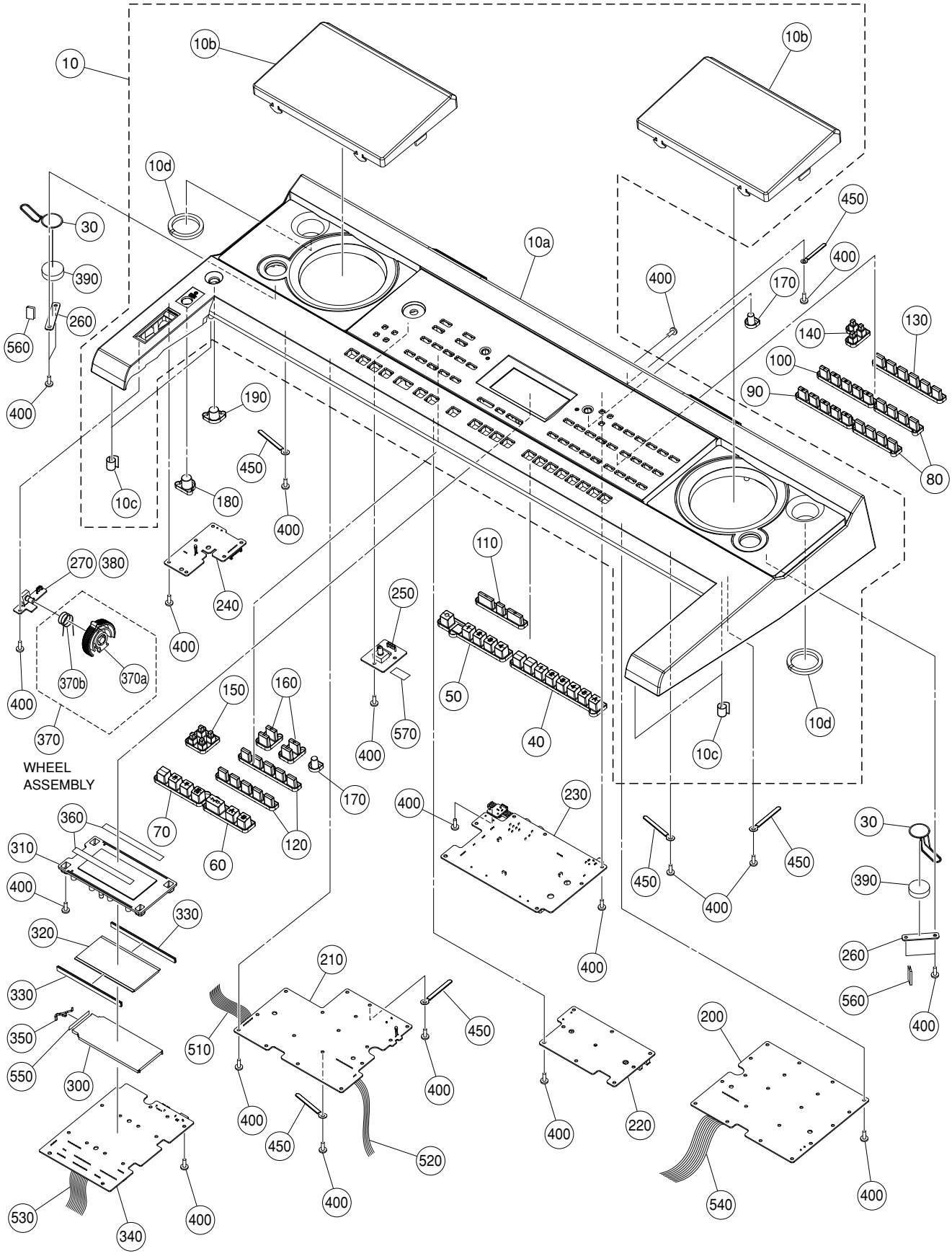

	REF NO.	PART NO.	DESCRIPTION		部品名	REMARKS	QTY	RANK
			UPPER CASE ASSEMBLY		上ケースAss'y	KB-290/KB-291		
		--	UPPER CASE ASSEMBLY		上ケースAss'y	KB-290 (ZA30930)		
		--	UPPER CASE ASSEMBLY		上ケースAss'y	KB-291 (ZA32110)		
*	10	**ZD452800**	UPPER CASE SUB ASSEMBLY		上ケースサブAss'y	KB-290		
*	10	**ZD452900**	UPPER CASE SUB ASSEMBLY		上ケースサブAss'y	KB-291		
*	10a	**ZA305800**	UPPER CASE		上ケース塗装印刷品	KB-290		
*	10a	**ZA305900**	UPPER CASE		上ケース塗装印刷品	KB-291		
*	10b	**ZA309200**	SP GRILLE ASSEMBLY		SPグリルAss'y	KB-290	2	
*	10b	**ZA321000**	SP GRILLE ASSEMBLY		SPグリルAss'y	KB-291	2	
	10c	**WG818300**	NONWOVEN FABRIC CLOTH		不織布		4	01
	10d	--	CUSHION	120X5X5	クッション	(WM16930)	2	
*	30	**X0159B00**	LOUD SPEAKER	3.0cm	スピーカ	TWEETER	2	
*	40	**WZ390300**	PN SWITCH	x8	PNスイッチ	SONG NO.,...SONG 1/2/3/4/5/A		
*	50	**WZ390200**	PN SWITCH	x5	PNスイッチ	MEMORY,REGIST 1/2/3/4		
*	60	**WZ390100**	PN SWITCH	x3	PNスイッチ	START/STOP,MAIN A/B		
*	70	**WZ390000**	PN SWITCH	x4	PNスイッチ	ACMP,SYNCRO STOP, SYNCRO START,INTRO/ENDING		
*	80	**WZ390600**	PN SWITCH	x4	PNスイッチ	STRINGS1,...CLARINET, SYN LEAD,...SE/XG	2	
*	90	**WZ390400**	PN SWITCH	x5	PNスイッチ	OBOE,...HARP		
*	100	**WZ390900**	PN SWITCH	x5	PNスイッチ	PIANO,...VIBES		
*	110	**WZ390800**	PN SWITCH	x3	PNスイッチ	FUNCTION,+/YES,-/NO		
*	120	**WZ390700**	PN SWITCH	x5	PNスイッチ	8BEAT,...GD WUSHI, RUMBA,...METRO.	2	
*	130	**WZ391200**	PN SWITCH	x6	PNスイッチ	ERHU,...ENSEMBLE		
*	140	**WZ391500**	PN SWITCH	x3	PNスイッチ	SUSTAIN,DUAL,SPLIT		
*	150	**WZ391400**	PN SWITCH	x4	PNスイッチ	DEMO,USB,TOUCH,REVERB		
*	160	**WZ391300**	PN SWITCH	x2	PNスイッチ	STYLE VOL.[+],[-], TEMPO [+],[-]	2	
*	170	**WZ391600**	PN SWITCH	x1	PNスイッチ	STYLE,VOICE	2	
*	180	**WZ391800**	PN SWITCH	x1	PNスイッチ	PORTAMENTO		
*	190	**WZ391700**	PN SWITCH	x1	PNスイッチ	STANDBY/ON		
*	200	**WZ269500**	CIRCUIT BOARD	PNR	PNRシート			
*	210	**WZ269600**	CIRCUIT BOARD	PNL	PNLシート			
*	220	**WZ269700**	CIRCUIT BOARD	PNC	PNCシート			
*	230	**WZ270000**	CIRCUIT BOARD	AMJK	AMJKシート			
*	240	**WZ269800**	CIRCUIT BOARD	PNP	PNPシート			
*	250	**WZ270100**	CIRCUIT BOARD	MV	MVシート			
*	260	**WZ270300**	CIRCUIT BOARD	TW	TWシート		2	
*	270	**WZ270200**	CIRCUIT BOARD	PB	PBシート			
	300	**WT651300**	BACK LIGHT ASSEMBLY	PT	バックライトAss'y			07
*	310	**WZ373000**	LCD PANEL		LCDパネル成形品			
*	320	**WZ330100**	LCD DISPLAY		液晶ディスプレイ			
*	330	**WZ963200**	RUBBER CNNECTOR	ZEBRA	ゴムコネクター		2	
*	340	**WZ269300**	CIRCUIT BOARD	DMLCD	DMLCDシート			
	350	--	CONNECTOR ASSEMBLY	BL 2P L=70	BL線材	(WC60540)		
	360	--	NONWOVEN FABRIC CLOTH	5X8	不織布	(V706870)	2	
	370	**VY79310R**	WHEEL ASSEMBLY		ホイールAss'y	PITCH BEND		04
	370a	**VY75080R**	WHEEL		ホイール			03
	370a	**VY750810**	WHEEL		WHEEL			01
	370b	**VT44010R**	SPRING		ホイールバネ			03
	380	**TX920280**	GREASE	G-31KA 50g	グリス	(VE96850)		38
	390	**WD365700**	SPONGE	27	スポンジ		2	01
	400	**WE774301**	BIND HEAD TAPPING SCREW-B	3.0X8 MFZN2W3	Bタイト十BIND		92	01
	450	**CB829850**	CORD HOLDER	S-34B	束線止め		6	03
	510	--	CONNECTOR ASSEMBLY	PNP PH-9P	PN P束線	(ZA53660)		
	520	--	CONNECTOR ASSEMBLY	PN PHR-3P	PN 束線	(ZC35770)		
	530	--	CONNECTOR ASSEMBLY	PNL PH-14P	PN L束線	(ZA57650)		
	540	--	CONNECTOR ASSEMBLY	PNL PH-14P	PN L束線	(ZA57650)		
	550	--	NONWOVEN CLOTH		不織布	(WH34740)		
	560	--	NONWOVEN CLOTH	10X7X0.35	不織布	(WN91440)	2	
	570	--	NONWOVEN CLOTH	36X12X0.35	不織布	(WM89180)		

*: New Parts

RANK: Japan only

■ LOWER KEY BED ASSEMBLY

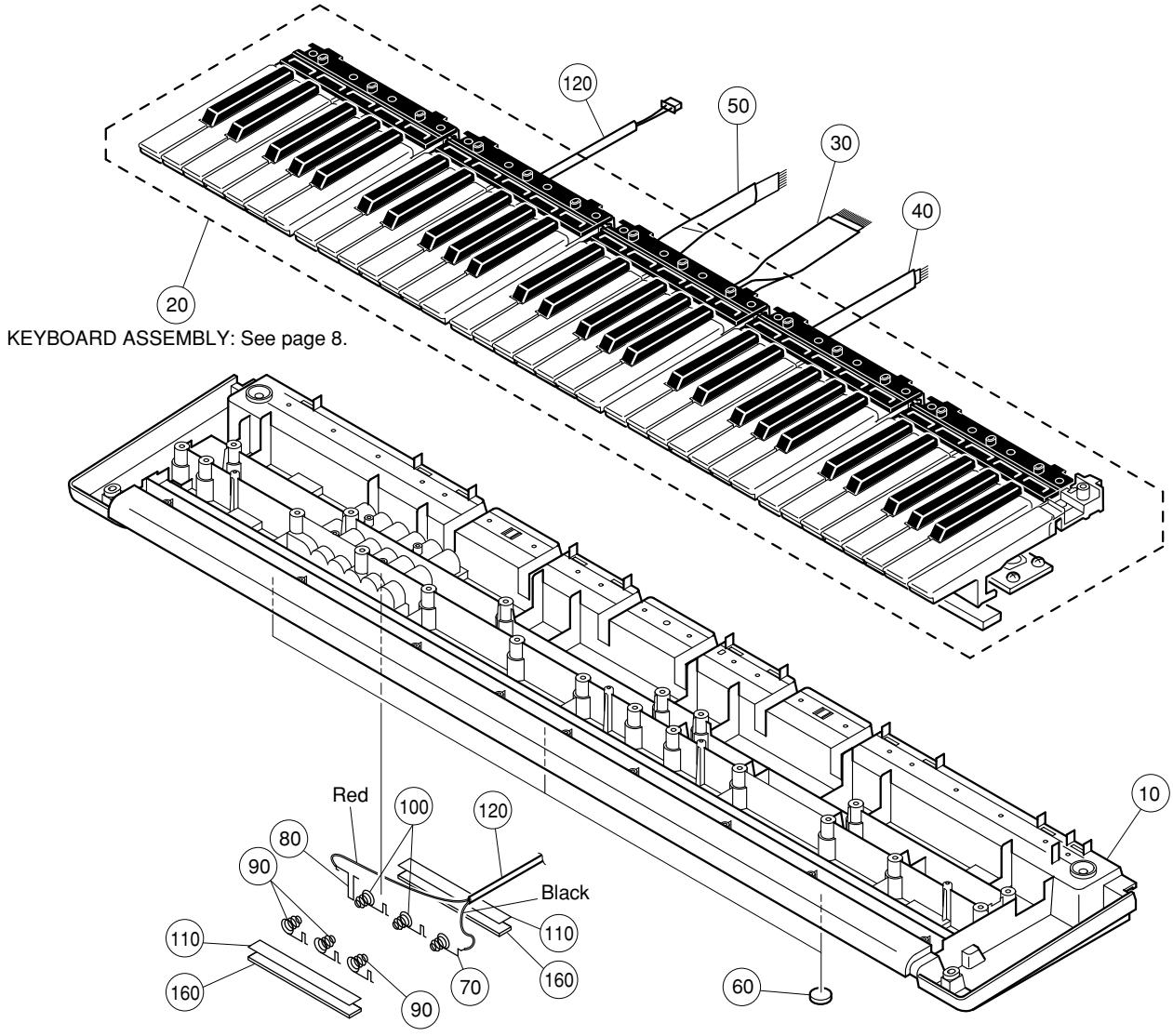

KEYBOARD ASSEMBLY: See page 8.

REF NO.	PART NO.	DESCRIPTION		部品名	REMARKS	QTY	RANK
		LOWER KEY BED ASSEMBLY		下ケース鍵盤Ａｓｓ’ｙ	KB-290/KB-291		
	--	LOWER KEY BED ASSEMBLY		下ケース鍵盤Ａｓｓ’ｙ	(ZA30680)		
10	**WD83950R**	LOWER CASE F	FRONT	下ケース成形品（Ｆ）			08
20	**WE126700**	KEYBOARD ASSEMBLY	16N C61 P2M	１６Ｎ－Ｃ６１－２Ｍ			14
30	--	CONNECTOR ASSEMBLY	12P L=250	束線	(ZA27390)		
40	--	CONNECTOR ASSEMBLY	5P L=250	束線	(ZA26060)		
50	--	CONNECTOR ASSEMBLY	7P L=200	束線	(ZA26420)		
60	**WW693500**	RUBBER FOOT		ゴム脚		3	01
70	**WD87920R**	SPRING TERMINAL A		接点バネA			01
80	**WD87930R**	SPRING TERMINAL B		接点バネB			01
90	**WD87940R**	SPRING TERMINAL C		接点バネC		3	01
100	**WD87970R**	SPRING TERMINAL D		接点バネD		2	01
110	--	NONWOVEN CLOTH		不織布	(WD89680)	2	
120	--	CONNECTOR ASSEMBLY	BATT XH-3P (RED/BLACK)	ＢＡＴＴ束線	(ZA53710)		
160	--	CUSHION (PE)	98X6X1	クッション（ＰＥ）	(WU97160)	2	

✻: New Parts

RANK: Japan only

■ LOWER CASE ASSEMBLY

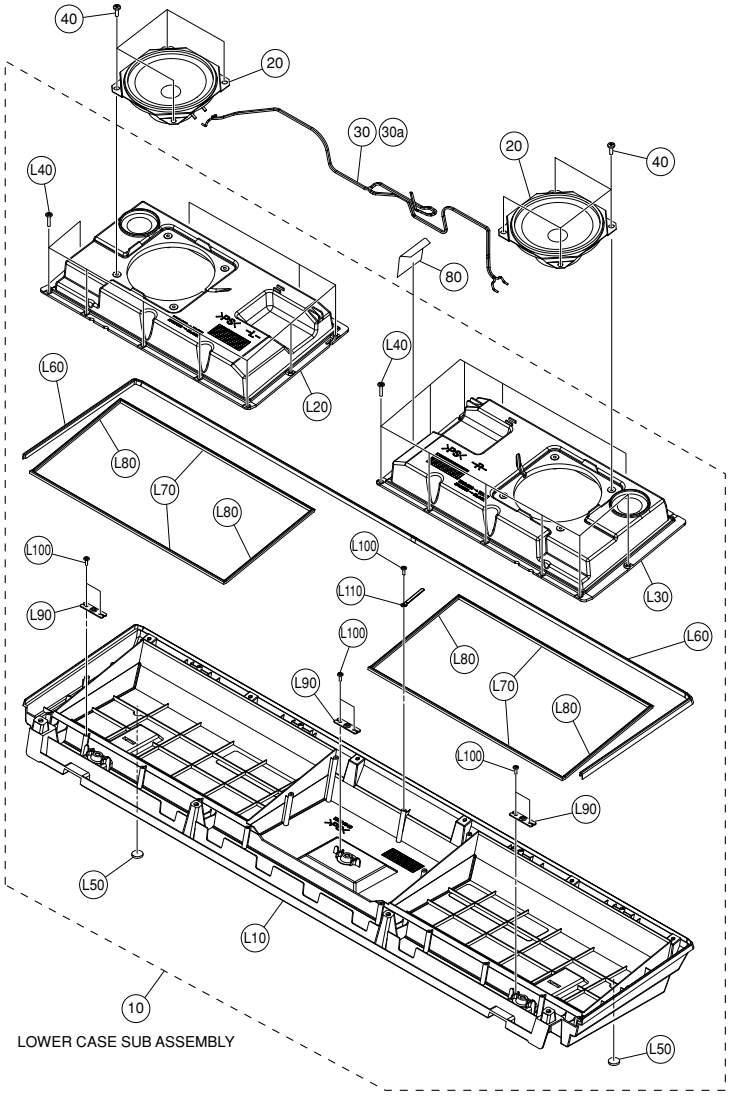

LOWER CASE SUB ASSEMBLY

REF NO.	PART NO.	DESCRIPTION		部品名	REMARKS	QTY	RANK
		LOWER CASE ASSEMBLY		下ケースAss'y	KB-290/KB-291		
	--	LOWER CASE ASSEMBLY		下ケースAss'y	(ZA30660)		
10	**WM170500**	LOWER CASE SUB ASSEMBLY		下ケースサブAss'y			10
* 20	**YE096A00**	LOUD SPEAKER	12.0cm 6ohm 6W	スピーカ	WOOFER	2	
30	--	CONNECTOR ASSEMBLY	SP 4P	SP束線Ass'y	(ZA35470)		
40	**WE97460R**	BIND HEAD TAPPING SCREW-B	4.0X8 MFZN2W3	Bタイト十BIND		8	01
80	--	NONWOVEN CLOTH		不織布	(ZE20590)		
	WM170500	LOWER CASE SUB ASSEMBLY		下ケースサブAss'y			10
L10	**WM143400**	LOWER CASE R	REAR	下ケース成形品R			08
L20	**WM171000**	SP-BOX L ASSEMBLY	LEFT	スピーカボックスL			05
L30	**WM171100**	SP-BOX R ASSEMBLY	RIGHT	スピーカボックスR			05
L40	**WE98740R**	BIND HEAD TAPPING SCREW-B	3.0X12 MFZN2W3	Bタイト十BIND		20	01
L50	**WW693500**	RUBBER FOOT		ゴム脚		2	01
L60	**WJ974700**	CUSHION (PE)	685X15X1	クッション(PE)		2	01
L70	**WH265000**	CUSHION (PE)	332X8X1	クッション(PE)		4	01
L80	**WH265100**	CUSHION (PE)	176X8X1	クッション(PE)		4	01
L90	**VI104400**	LEG HOLDER	CH	脚取り付け金具天津製		3	
L100	**WE774301**	BIND HEAD TAPPING SCREW-B	3.0X8 MFZN2W3	Bタイト十BIND		7	01
L110	**CB829850**	CORD HOLDER	S-34B	束線止め			03

*: New Parts

RANK: Japan only

■ KEYBOARD ASSEMBLY

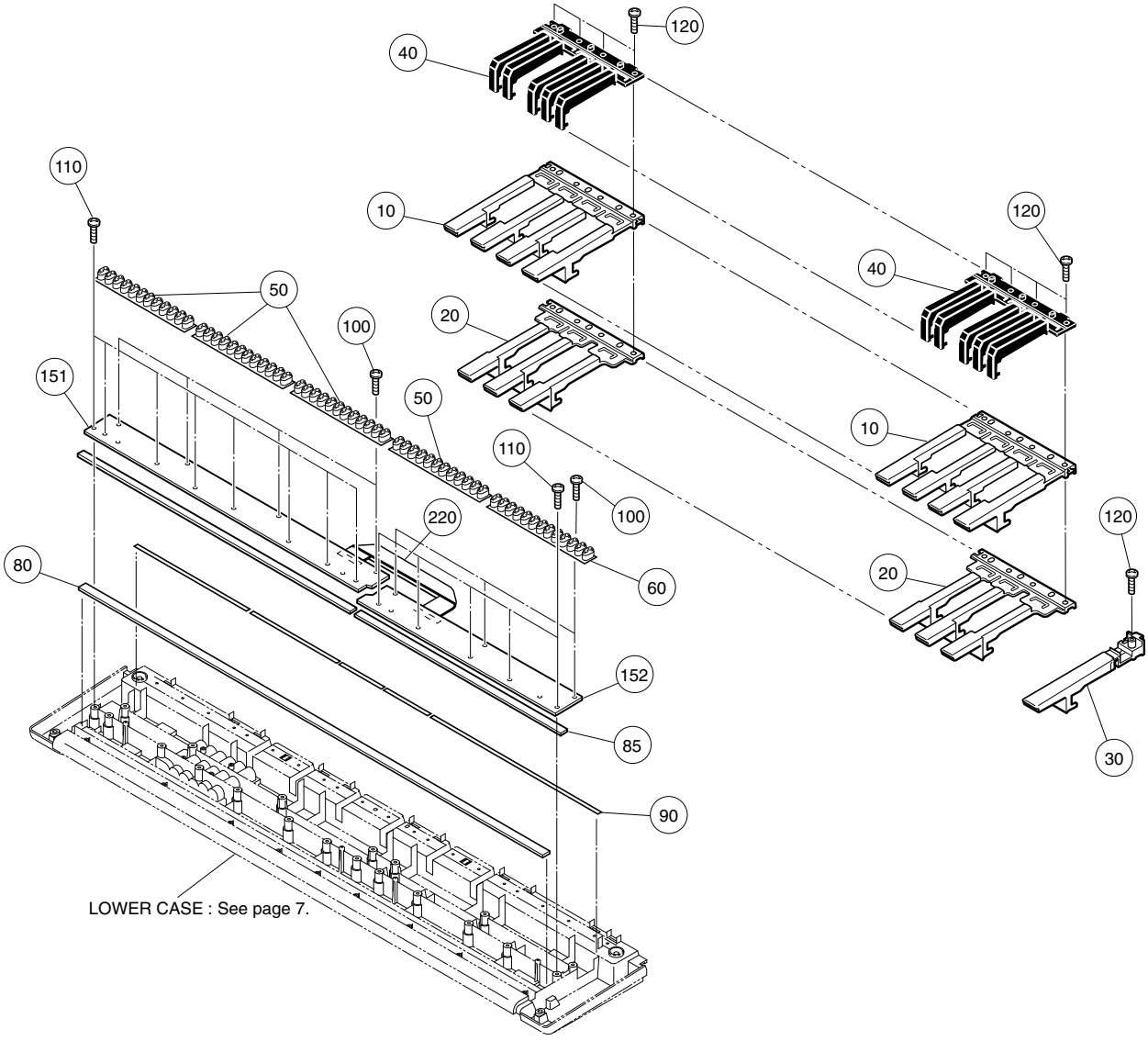

REF NO.	PART NO.	DESCRIPTION		部品名	REMARKS	QTY	RANK
		KEYBOARD ASSEMBLY		16N－C61－2M	KB-290/KB-291		
	WE126700	KEYBOARD ASSEMBLY	16N C61 P2M	16N－C61－2M			14
10	**V3412600**	WHITE KEYS	16N CEGB	白鍵 C E G B		5	
10	**WB12520R**	WHITE KEYS	16N CEGB	白鍵 C E G B		5	02
20	**V3412700**	WHITE KEYS	16L DFA	白鍵 D F A		5	
20	**WB12530R**	WHITE KEYS	16L DFA	白鍵 D F A		5	02
30	**V476030R**	WHITE KEY	16N C'	白鍵 C'			02
40	**VZ27170R**	BLACK KEYS	16N	黒鍵		5	02
40	**VZ271710**	BLACK KEYS	16N	黒鍵		5	03
50	**V3413601**	RUBBER CONTACT	16N-2M OCT 2M	接点ゴム16N2M		4	04
60	**V747740R**	RUBBER CONTACT	16N-2M 13K 2M	接点ゴム16N2M			04
80	**VZ303000**	FELT WHITE L	LOWER 11X827	フェルト L			02
85	**VZ302901**	FELT WHITE U	UPPER 836X5	フェルト U			02
90	**WA52510R**	CUSHION SHEET		クッションシート			01
100	**WE774301**	BIND HEAD TAPPING SCREW-B	3.0X8 MFZN2W3	Bタイト＋BIND		7	01
110	**WH899400**	BIND HEAD TAPPING SCREW-P	3.0X12 MFZN2W3 SP	Pタイト＋BIND		13	01
120	**WF49200R**	BIND HEAD TAPPING SCREW-P	3.0X20 MFZN2W3	Pタイト＋BIND		21	01
151	**V869530R**	CIRCUIT BOARD	61L-MK	シート61L			04
152	**V869550R**	CIRCUIT BOARD	61H-MK	シート61H			06
220	**V869620R**	CONNECTOR ASSEMBLY	16N-2M-C61 L=210	中継束線			01

✻: New Parts

RANK: Japan only

■ EXP PEDAL

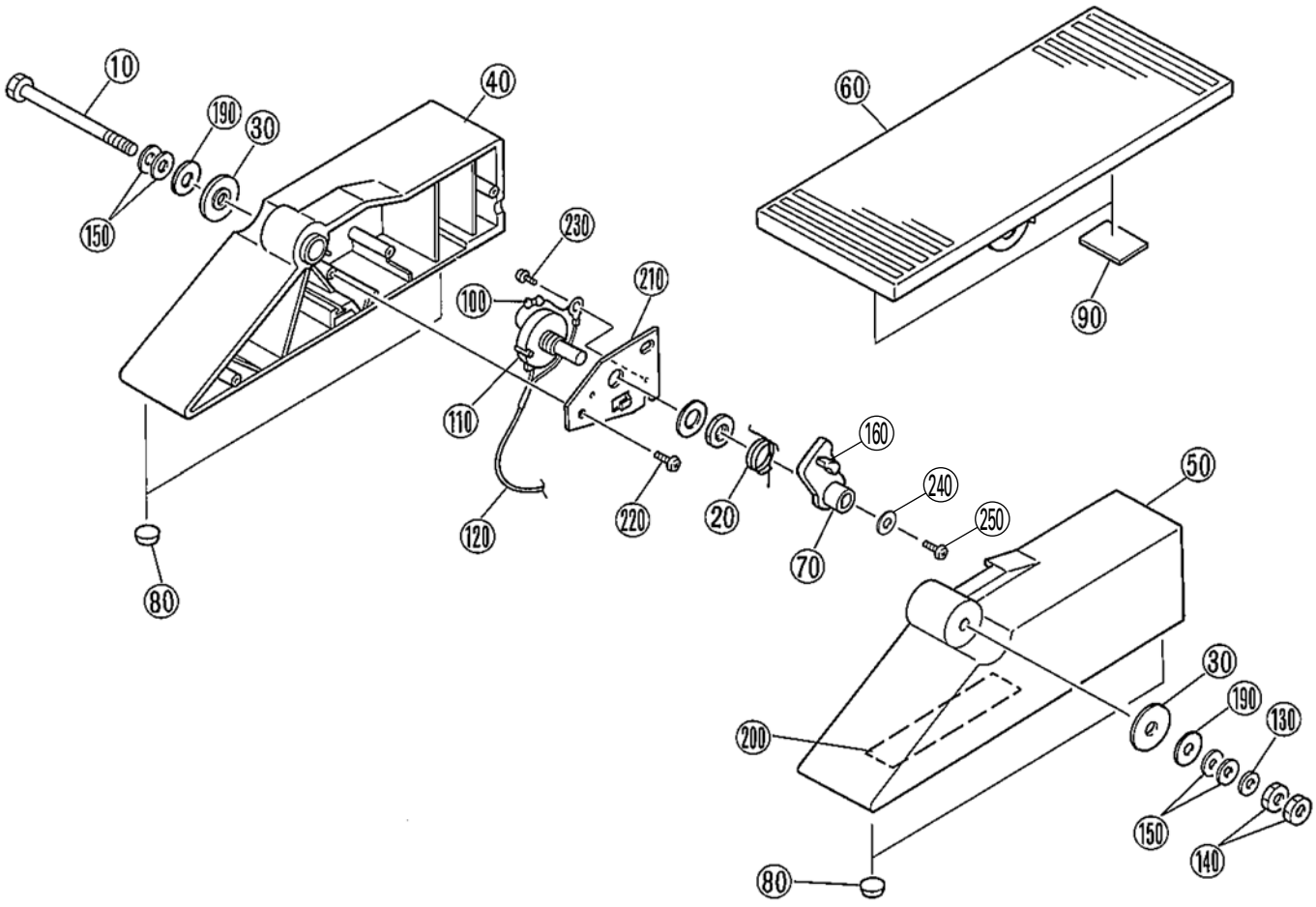

REF NO.	PART NO.	DESCRIPTION		部品名	REMARKS	QTY	RANK
		EXP PEDAL		EXPペダル	KB-290/KB-291		
	VP622500	EXP PEDAL	EP-1	EXPペダル			
10	**WF762700**	HEX HEAD BOLT	6.0X65 MFZN2W3	ボルトHEX			
20	**VP607300**	TORSION COIL SPRING	EP-1	ねじりコイルバネ			
30	**--**	EXP SHAFT BUSH		EXP軸受	(WW83830)	2	
40	**CB036831**	FRAME A		フレーム A			04
50	**CB036840**	FRAME B		フレーム B			04
60	**CB036851**	EXP.PEDAL PLATE		踏板			04
70	**VP607400**	ACTUATOR	EP-1	アクチュエータ			
80	**VP796900**	FOOT	EPDM	スベリ座		4	
90	**CC021910**	FELT		フェルト		2	01
100	**HF855270**	CARBON RESISTOR	270.0 1/4 J ST	カーボン抵抗			01
100	**VP759200**	CARBON RESISTOR	270.0 1/4 J FORM.	カーボン抵抗P＝25			
110	**WR160800**	ROTARY VARIABLE RESISTOR	20.0K RK16Y11	ローターリーVR			
120	**VP889100**	EXP CORD		EXPコード			
120	**WM055800**	RCA CABLE	XM-0068	RCAケーブル			
130	**WF723600**	PLAIN WASHER SMALL	6X11.5X0.8 MFZN2W3	平座金小型丸			01
140	**WF782700**	HEX NUT	#3 6.0	六角ナット		2	
150	**WF724600**	CONICAL SPRING WASHER	1L 6.0 MFZN2W3	皿バネ座金		4	
160	**--**	SILICONE GREASE	G-30H	シリコングリス	(0412108)		
190	**WF724500**	PLAIN WASHER	6.0X16X1.0 MFZN2W3	平座金みがき丸		2	
200	**--**	NAME PLATE	EP-1	銘板天津製	(VL64520)		
210	**--**	VOLUME PLATE	EP-1	ボリューム金具	(WU30740)		
220	**WE774800**	BIND HEAD TAPPING SCREW-P	3.0X8 MFZN2W3	Pタイト＋BIND		3	01
230	**WE974100**	BIND HEAD TAPPING SCREW-C	3.0X6 MFZN2W3	Cタイト＋BIND			01
240	**WG808000**	PLAIN WASHER	3.0X8X1.0 MFZN2W3	平座みがき丸			01
250	**--**	BIND HEAD TAPPING SCREW-B	2.0X6 MFNI33	Bタイト ＋BIND	(WK86970)		

✻: New Parts

RANK: Japan only

■ ELECTRICAL PARTS

AMJK

	REF NO.	PART NO.	DESCRIPTION		部品名	REMARKS	QTY	RANK
			ELECTRICAL PARTS		電気部品	KB-290/KB-291		
*		**WZ270000**	CIRCUIT BOARD	AMJK	AMJKシート	(WZ26990)(YD800D0)		
*		**WZ269300**	CIRCUIT BOARD	DMLCD	DMLCDシート	(WZ26920)(YD796C0)(YE803A0)		
*		**WZ270100**	CIRCUIT BOARD	MV	MVシート	(WZ26940)(YD799C0)		
*		**WZ270200**	CIRCUIT BOARD	PB	PBシート	(WZ26940)(YD799C0)		
*		**WZ269700**	CIRCUIT BOARD	PNC	PNCシート	(WZ26940)(YD799C0)		
*		**WZ269600**	CIRCUIT BOARD	PNL	PNLシート	(WZ26940)(YD799C0)		
*		**WZ269800**	CIRCUIT BOARD	PNP	PNPシート	(WZ26940)(YD799C0)		
*		**WZ270300**	CIRCUIT BOARD	TW	TWシート	(WZ26940)(YD799C0)		
*		**WZ269500**	CIRCUIT BOARD	PNR	PNRシート	(WZ69670)(YD925C0)		
		V869550R	CIRCUIT BOARD	61H-MK	シート61H	(V869540)(X2335D0)		06
		V869530R	CIRCUIT BOARD	61L-MK	シート61L	(V869520)(X2336C0)		04
*		**WZ270000**	CIRCUIT BOARD	AMJK	AMJKシート	(WZ26990)(YD800D0)		
		WE774301	BIND HEAD TAPPING SCREW-B	3.0X8 MFZN2W3	Bタイト＋BIND		3	01
		--	SILICON GREASE	G-746	シリコングリス	(0412125)		
		--	SILICON GREASE	X-113A G746	シリコングリス	(VA79810)		
	CN100	**VK024600**	CONNECTOR	52147 2P TE	ワイヤートラップ			01
	CN101	**VL844700**	CONNECTOR	XH 3P TE	ベーススツキポスト			01
	CN103	**VI878300**	CONNECTOR	51048 5P TE	ケーブルホルダー			01
	CN103	**VZ34170R**	CONNECTOR	51048 5P TE	ケーブルホルダー天津			
	CN203	**VK024900**	CONNECTOR	52147 5P TE	ワイヤートラップ			01
	CN204	**VI878300**	CONNECTOR	51048 5P TE	ケーブルホルダー			01
	CN204	**VZ34170R**	CONNECTOR	51048 5P TE	ケーブルホルダー天津			
	CN205	**VK024700**	CONNECTOR	52147 3P TE	ワイヤートラップ			01
	CN209	**VL844800**	CONNECTOR	XH 4P TE	ベーススツキポスト			01
	CN210	**VK024600**	CONNECTOR	52147 2P TE	ワイヤートラップ			01
	CN211	**VI878300**	CONNECTOR	51048 5P TE	ケーブルホルダー			01
	CN211	**VZ34170R**	CONNECTOR	51048 5P TE	ケーブルホルダー天津			
	CN212	**VI878900**	CONNECTOR	51048 11P TE	ケーブルホルダー			01
	CN212	**VY66880R**	CONNECTOR	51048 11P TE	ケーブルホルダー天津			
	D103	**VY71710R**	DIODE	LT2A02-E JI	ダイオード			01
	D103	**WV008801**	DIODE	2A02-A0 TE-52	ダイオード			
*	FT001	**ZA675500**	FET	TJ20A10M3	FET			
⚠	FZ1	**ZE036600**	FUSE	T 2.5A 250V (P)	ヒューズ250V			01
	IC100	**X5887A0R**	IC	BA50BC0T	IC	REGULATOR +5V 1.0A		03
*	IC101	**YE334A00**	IC	TDA7266SA	IC	7W+7W DUAL BRIDGE AMPLIFIER		
	IC102	**XP844A00**	IC	NJM4556AL	IC	OP AMP		02
⚠	JK100	**WZ704400**	DC CONNECTOR	DC-502-AG-PBT-2.0	電源コネクタ	DC IN 12V		
	JK200	**LB101870**	PHONE CONNECTOR	JACK YKB21-5006	ホーンコネクタ	PHONES/OUTPUT		03
	JK200	**VV943300**	PHONE CONNECTOR	JACK HTJ-064-04A	ホーンコネクタ			02
	JK201	**VM467200**	PIN CONNECTOR	JACK LCZ3.4-1 1P	ピンコネクタ1P	EXP.PEDAL		
	JK201	**WH945500**	PIN CONNECTOR	JACK YKB11-0843N 1P	ピンコネクタ1P			
	JK202	**VC68750R**	PHONE CONNECTOR BLACK	JACK YKB21-5014	ホーンコネクタ（黒）	SUSTAIN		01
	JK202	**WE24520R**	PHONE CONNECTOR BLACK	JY-6314-01-020	ホーンコネクタ（黒）			
	K200	**--**	HEAT SINK		放熱板	(WZ49930)		
	WH001	**--**	WIRING ASSEMBLY	5P L=50	束線	(ZA17530)		
	WH002	**--**	WIRING ASSEMBLY	11P L=50	束線	(ZA18490)		
	WH003	**--**	WIRING ASSEMBLY	5P L=50	束線	(ZA17530)		
	C100	**UR828220**	ELECTROLYTIC CAPACITOR	220.00 10.0V RX TP	ケミコン			01
	C101	**VC69480R**	SEMICONDUCTOR CERAMIC CAP.	0.1000 25V Z	半導体セラコン			01
	C101	**VC694810**	SEMICONDUCTOR CERAMIC CAP.	0.1000 25V Z	半導体セラコン			01
	C102	**VC69480R**	SEMICONDUCTOR CERAMIC CAP.	0.1000 25V Z	半導体セラコン			01
	C102	**VC694810**	SEMICONDUCTOR CERAMIC CAP.	0.1000 25V Z	半導体セラコン			01
	C103	**UR867100**	ELECTROLYTIC CAPACITOR	10.00 50.0V RX TP	ケミコン			01
	C104	**V3773100**	ELECTROLYTIC CAPACITOR	4700.0 25.0V FORM.	ケミコン			
	C105	**VC69480R**	SEMICONDUCTOR CERAMIC CAP.	0.1000 25V Z	半導体セラコン			01
	C105	**VC694810**	SEMICONDUCTOR CERAMIC CAP.	0.1000 25V Z	半導体セラコン			01
	C107	**VC69480R**	SEMICONDUCTOR CERAMIC CAP.	0.1000 25V Z	半導体セラコン			01
	C107	**VC694810**	SEMICONDUCTOR CERAMIC CAP.	0.1000 25V Z	半導体セラコン			01
	C202	**VC69480R**	SEMICONDUCTOR CERAMIC CAP.	0.1000 25V Z	半導体セラコン			01
	C203	**VC69480R**	SEMICONDUCTOR CERAMIC CAP.	0.1000 25V Z	半導体セラコン			01
	C209	**V5516600**	POLYESTER FILM CAPACITOR	1.0000 50V J	マイラーコン			
	C209	**VE327200**	MONOLITHIC POLYESTER F. CAP.	1.0 50V J RX TP	積層マイラーコン			02
	C209	**VU838100**	MONOLITHIC POLYESTER F. CAP.	1.0000 50V J	積層マイラーコン			
	C210	**V5516600**	POLYESTER FILM CAPACITOR	1.0000 50V J	マイラーコン			
	C210	**VE327200**	MONOLITHIC POLYESTER F. CAP.	1.0 50V J RX TP	積層マイラーコン			02
	C210	**VU838100**	MONOLITHIC POLYESTER F. CAP.	1.0000 50V J	積層マイラーコン			
	C211	**VR02620R**	CERAMIC CAPACITOR	1000P 63V K	セラコン B			
	C211	**WW465700**	CERAMIC CAPACITOR	1000P 63V K	セラコン			01

*: New Parts

RANK: Japan only

AMJK

REF NO.	PART NO.	DESCRIPTION		部品名	REMARKS	QTY	RANK
C212	**VR02620R**	CERAMIC CAPACITOR	1000P 63V K TATEJI	セラコン B			
C212	**WW465700**	CERAMIC CAPACITOR	1000P 63V K TATETE	セラコン			01
C213	**UR837470**	ELECTROLYTIC CAPACITOR	47.00 16.0V RX TP	ケミコン			01
C214	**UR867100**	ELECTROLYTIC CAPACITOR	10.00 50.0V RX TP	ケミコン			01
C217	**VC69480R**	SEMICONDUCTOR CERAMIC CAP.	0.1000 25V Z TATET	半導体セラコン			01
C217	**VC694810**	SEMICONDUCTOR CERAMIC CAP.	0.1000 25V Z TATET	半導体セラコン			01
C218	**UR838100**	ELECTROLYTIC CAPACITOR	100.00 16.0V RX TP	ケミコン			01
C219	**UR838100**	ELECTROLYTIC CAPACITOR	100.00 16.0V RX TP	ケミコン			01
C221	**FG65210R**	CERAMIC CAPACITOR	100P 50V J RX TP	セラコン(SL)			01
C222	**FG65210R**	CERAMIC CAPACITOR	100P 50V J RX TP	セラコン(SL)			01
C225	**VC69480R**	SEMICONDUCTOR CERAMIC CAP.	0.1000 25V Z TATET	半導体セラコン			01
C225	**VC694810**	SEMICONDUCTOR CERAMIC CAP.	0.1000 25V Z TATET	半導体セラコン			01
C230	**VC69480R**	SEMICONDUCTOR CERAMIC CAP.	0.1000 25V Z	半導体セラコン			01
C237	**UR837470**	ELECTROLYTIC CAPACITOR	47.00 16.0V RX TP	ケミコン			01
C240	**WW465400**	CERAMIC CAPACITOR	220P 63V K	セラコン			
C241	**WW465400**	CERAMIC CAPACITOR	220P 63V K	セラコン			
C244	**UR866100**	ELECTROLYTIC CAPACITOR	1.00 50.0V RX TP	ケミコン			01
C244	**V351190R**	ELECTROLYTIC CAPACITOR	1.00 50.0V TP	ケミコン			
C245	**UR866100**	ELECTROLYTIC CAPACITOR	1.00 50.0V RX TP	ケミコン			01
C245	**V351190R**	ELECTROLYTIC CAPACITOR	1.00 50.0V TP	ケミコン			
C246	**VC69480R**	SEMICONDUCTOR CERAMIC CAP.	0.1000 25V Z	半導体セラコン			01
C247	**UR837470**	ELECTROLYTIC CAPACITOR	47.00 16.0V RX TP	ケミコン			01
C248	**UR837470**	ELECTROLYTIC CAPACITOR	47.00 16.0V RX TP	ケミコン			01
⚠ D100	**VB941200**	DIODE	1SS133,1SS176 TE-5	ダイオード			01
-102	**VB941200**	DIODE	1SS133,1SS176 TE-5	ダイオード			01
⚠ D100	**VD631600**	DIODE	1SS133,176,HSS104	ダイオード			01
-102	**VD631600**	DIODE	1SS133,176,HSS104	ダイオード			01
D104	**WR195300**	DIODE	1D4 26	ダイオード			
D105	**WR195300**	DIODE	1D4 26	ダイオード			
J100	**--**	JUMPER WIRE	0.55 TIN	ジャンパー線	(VA07890)		
J101	**--**	JUMPER WIRE	0.55 TIN	ジャンパー線	(VA07890)		
J105	**--**	JUMPER WIRE	0.55 TIN	ジャンパー線	(VA07890)		
J106	**--**	JUMPER WIRE	0.55 TIN	ジャンパー線	(VA07890)		
J200	**--**	JUMPER WIRE	0.55 TIN	ジャンパー線	(VA07890)		
J201	**--**	JUMPER WIRE	0.55 TIN	ジャンパー線	(VA07890)		
L200	**--**	JUMPER WIRE	0.55 TIN	ジャンパー線	(VA07890)		
R100	**HF45510R**	CARBON RESISTOR	100.0 1/4 J AX TP	カーボン抵抗			01
-102	**HF45510R**	CARBON RESISTOR	100.0 1/4 J AX TP	カーボン抵抗			01
R103	**HF457150**	CARBON RESISTOR	15.0K 1/4 J AX TP	カーボン抵抗			01
R105	**HF456271**	CARBON RESISTOR	2.7K 1/4 J AX TP	カーボン抵抗			01
R106	**HF456271**	CARBON RESISTOR	2.7K 1/4 J AX TP	カーボン抵抗			01
R107	**HF457470**	CARBON RESISTOR	47.0K 1/4 J AX TP	カーボン抵抗			01
R108	**HF45510R**	CARBON RESISTOR	100.0 1/4 J AX TP	カーボン抵抗			01
R109	**HF45727R**	CARBON RESISTOR	27.0K 1/4 J AX TP	カーボン抵抗			01
R110	**HF45822R**	CARBON RESISTOR	220.0K 1/4 J AX TP	カーボン抵抗			01
R111	**HF457470**	CARBON RESISTOR	47.0K 1/4 J AX TP	カーボン抵抗			01
R202	**HF456680**	CARBON RESISTOR	6.8K 1/4 J AX TP	カーボン抵抗			01
R203	**HF456680**	CARBON RESISTOR	6.8K 1/4 J AX TP	カーボン抵抗			01
R205	**HF457330**	CARBON RESISTOR	33.0K 1/4 J AX TP	カーボン抵抗			01
R210	**HF454100**	CARBON RESISTOR	10.0 1/4 J AX TP	カーボン抵抗			01
R211	**HF454100**	CARBON RESISTOR	10.0 1/4 J AX TP	カーボン抵抗			01
R212	**HF45510R**	CARBON RESISTOR	100.0 1/4 J AX TP	カーボン抵抗			01
-214	**HF45510R**	CARBON RESISTOR	100.0 1/4 J AX TP	カーボン抵抗			01
R215	**--**	JUMPER WIRE	0.55 TIN	ジャンパー線	(VA07890)		
R220	**HF45722R**	CARBON RESISTOR	22.0K 1/4 J AX TP	カーボン抵抗			01
R221	**HF457150**	CARBON RESISTOR	15.0K 1/4 J AX TP	カーボン抵抗			01
R222	**HF457150**	CARBON RESISTOR	15.0K 1/4 J AX TP	カーボン抵抗			01
R223	**HF45727R**	CARBON RESISTOR	27.0K 1/4 J AX TP	カーボン抵抗			01
R224	**HF457150**	CARBON RESISTOR	15.0K 1/4 J AX TP	カーボン抵抗			01
R225	**HF45510R**	CARBON RESISTOR	100.0 1/4 J AX TP	カーボン抵抗			01
R226	**HF45710R**	CARBON RESISTOR	10.0K 1/4 J AX TP	カーボン抵抗			01
R230	**HF454150**	CARBON RESISTOR	15.0 1/4 J AX TP	カーボン抵抗			01
R232	**HF45510R**	CARBON RESISTOR	100.0 1/4 J AX TP	カーボン抵抗			01
R233	**HF45510R**	CARBON RESISTOR	100.0 1/4 J AX TP	カーボン抵抗			01
R234	**HF45610R**	CARBON RESISTOR	1.0K 1/4 J AX TP	カーボン抵抗			01
R235	**HF45610R**	CARBON RESISTOR	1.0K 1/4 J AX TP	カーボン抵抗			01
R236	**HF454150**	CARBON RESISTOR	15.0 1/4 J AX TP	カーボン抵抗			01
R240	**HF45710R**	CARBON RESISTOR	10.0K 1/4 J AX TP	カーボン抵抗			01
R241	**HF45710R**	CARBON RESISTOR	10.0K 1/4 J AX TP	カーボン抵抗			01
R242	**HF457180**	CARBON RESISTOR	18.0K 1/4 J AX TP	カーボン抵抗			01

✻: New Parts

RANK: Japan only

AMJK and DMLCD

REF NO.	PART NO.	DESCRIPTION		部品名	REMARKS	QTY	RANK
R243	**HF457180**	CARBON RESISTOR	18.0K 1/4 J AX TP	カーボン抵抗			01
R244	**HF456120**	CARBON RESISTOR	1.2K 1/4 J AX TP	カーボン抵抗			01
R245	**HF45615R**	CARBON RESISTOR	1.5K 1/4 J AX TP	カーボン抵抗			01
R246	**HF457470**	CARBON RESISTOR	47.0K 1/4 J AX TP	カーボン抵抗			01
R247	**HF457470**	CARBON RESISTOR	47.0K 1/4 J AX TP	カーボン抵抗			01
R248	**HF45547R**	CARBON RESISTOR	470.0 1/4 J AX TP	カーボン抵抗			01
R249	**HF457150**	CARBON RESISTOR	15.0K 1/4 J AX TP	カーボン抵抗			01
R250	**HF45510R**	CARBON RESISTOR	100.0 1/4 J AX TP	カーボン抵抗			01
R251	**HF454100**	CARBON RESISTOR	10.0 1/4 J AX TP	カーボン抵抗			01
TR101	**IC174070**	TRANSISTOR	2SC1740S R,S	トランジスタ 2SC			01
TR101	**V2797700**	TRANSISTOR	2SC5395-T112-E/F	トランジスタ 2SC			01
TR101	**WC292100**	TRANSISTOR	KTC3199-Y-AT/P	トランジスタ			01
TR101	**WC398400**	TRANSISTOR	2N5551C-AT/P	トランジスタ			01
TR101	**WE43600R**	TRANSISTOR	KTC3199 GR,BL	トランジスタ NPN			
TR102	**VV91240R**	TRANSISTOR	2SA933AS TP R.S TE	トランジスタ 2SA			01
TR102	**WZ853400**	TRANSISTOR	KTA1266-GR-AT/P GR	トランジスタ			01
TR200	**V2797700**	TRANSISTOR	2SC5395-T112-E/F	トランジスタ 2SC			01
-205	**V2797700**	TRANSISTOR	2SC5395-T112-E/F	トランジスタ 2SC			01
TR200	**WC398400**	TRANSISTOR	2N5551C-AT/P	トランジスタ			01
-205	**WC398400**	TRANSISTOR	2N5551C-AT/P	トランジスタ			01
*	**WZ269300**	CIRCUIT BOARD	DMLCD	DMLCDシート	(WZ26920)(YD796C0)(YE803A0)		
CN300	**VF72830R**	CONNECTOR	52147 6P TE	ワイヤートラップ			01
CN301	**VE35260R**	CONNECTOR	PH 14P TE	ベースポスト			01
CN302	**VE35260R**	CONNECTOR	PH 14P TE	ベースポスト			01
CN303	**VB38990R**	CONNECTOR	PH 3P TE	ベースポスト			01
CN401	**WH382500**	USB CONNECTOR	UAR27 4P SE	USBコネクタ	USB TO DEVICE		01
CN401	**WK450700**	USB CONNECTOR	YKF45-0033N 4P SE	USBコネクタ			01
CN401	**WQ353300**	USB CONNECTOR	KM13200073 4P SE	USBコネクタ			
CN402	**V6802600**	USB CONNECTOR	4P SE	USBジャック	USB TO HOST		02
CN402	**WR890200**	USB CONNECTOR	KM13200074 4P SE	USBコネクタ			
CN501	**VK02560R**	CONNECTOR	52147 12P TE	ワイヤートラップ			01
CN502	**VK025100**	CONNECTOR	52147 7P TE	ワイヤートラップ			01
CN503	**VK024900**	CONNECTOR	52147 5P TE	ワイヤートラップ			01
CN504	**VK025501**	CONNECTOR	52147 11P TE	ワイヤートラップ			01
CN505	**VK024900**	CONNECTOR	52147 5P TE	ワイヤートラップ			01
C001	**US661220**	CERAMIC CAPACITOR (CHIP)	22P 50V J RECT.	チップセラ（CH）			
C002	**US661220**	CERAMIC CAPACITOR (CHIP)	22P 50V J RECT.	チップセラ（CH）			
C003	**US635100**	CERAMIC CAPACITOR (CHIP)	0.100 16V Z RECT.	チップセラ（F）			01
-005	**US635100**	CERAMIC CAPACITOR (CHIP)	0.100 16V Z RECT.	チップセラ（F）			01
C006	**UF01747R**	ELECTROLYTIC CAPACITOR(CHIP)	47 6.3V	チップケミコン			01
C007	**US662100**	CERAMIC CAPACITOR (CHIP)	100P 50V J RECT.	チップセラ（CH）			
C008	**US635100**	CERAMIC CAPACITOR (CHIP)	0.100 16V Z RECT.	チップセラ（F）			01
C009	**US635100**	CERAMIC CAPACITOR (CHIP)	0.100 16V Z RECT.	チップセラ（F）			01
C010	**US662100**	CERAMIC CAPACITOR (CHIP)	100P 50V J RECT.	チップセラ（CH）			
C011	**US662470**	CERAMIC CAPACITOR (CHIP)	470P 50V K RECT.	チップセラ（B）			01
C012	**US634100**	CERAMIC CAPACITOR (CHIP)	0.010 16V K RECT.	チップセラ（B）			01
C013	**US635100**	CERAMIC CAPACITOR (CHIP)	0.100 16V Z RECT.	チップセラ（F）			01
-016	**US635100**	CERAMIC CAPACITOR (CHIP)	0.100 16V Z RECT.	チップセラ（F）			01
C017	**UF01747R**	ELECTROLYTIC CAPACITOR(CHIP)	47 6.3V	チップケミコン			01
C018	**US635100**	CERAMIC CAPACITOR (CHIP)	0.100 16V Z RECT.	チップセラ（F）			01
-021	**US635100**	CERAMIC CAPACITOR (CHIP)	0.100 16V Z RECT.	チップセラ（F）			01
C101	**US635100**	CERAMIC CAPACITOR (CHIP)	0.100 16V Z RECT.	チップセラ（F）			01
-103	**US635100**	CERAMIC CAPACITOR (CHIP)	0.100 16V Z RECT.	チップセラ（F）			01
C111	**US662100**	CERAMIC CAPACITOR (CHIP)	100P 50V J RECT.	チップセラ（CH）			
C112	**US635100**	CERAMIC CAPACITOR (CHIP)	0.100 16V Z RECT.	チップセラ（F）			01
C121	**US635100**	CERAMIC CAPACITOR (CHIP)	0.100 16V Z RECT.	チップセラ（F）			01
C122	**US635100**	CERAMIC CAPACITOR (CHIP)	0.100 16V Z RECT.	チップセラ（F）			01
C131	**US635100**	CERAMIC CAPACITOR (CHIP)	0.100 16V Z RECT.	チップセラ（F）			01
-136	**US635100**	CERAMIC CAPACITOR (CHIP)	0.100 16V Z RECT.	チップセラ（F）			01
C201	**US635100**	CERAMIC CAPACITOR (CHIP)	0.100 16V Z RECT.	チップセラ（F）			01
-206	**US635100**	CERAMIC CAPACITOR (CHIP)	0.100 16V Z RECT.	チップセラ（F）			01
C207	**UF037100**	ELECTROLYTIC CAPACITOR(CHIP)	10 16V	チップケミコン			01
C208	**US662100**	CERAMIC CAPACITOR (CHIP)	100P 50V J RECT.	チップセラ（CH）			
C209	**US662100**	CERAMIC CAPACITOR (CHIP)	100P 50V J RECT.	チップセラ（CH）			
C210	**US635100**	CERAMIC CAPACITOR (CHIP)	0.100 16V Z RECT.	チップセラ（F）			01
-212	**US635100**	CERAMIC CAPACITOR (CHIP)	0.100 16V Z RECT.	チップセラ（F）			01
C213	**US663100**	CERAMIC CAPACITOR (CHIP)	1000P 50V K RECT.	チップセラ（B）			01
C214	**UF037100**	ELECTROLYTIC CAPACITOR(CHIP)	10 16V	チップケミコン			01
C215	**WN019700**	CERAMIC CAPACITOR (CHIP)	2.200 16V K RECT.	チップセラ			01

✻: New Parts

RANK: Japan only

DMLCD

REF NO.	PART NO.	DESCRIPTION		部品名	REMARKS	QTY	RANK
C216	**WN019700**	CERAMIC CAPACITOR (CHIP)	2.200 16V K RECT.	チップセラ			01
C217	**UF037100**	ELECTROLYTIC CAPACITOR(CHIP)	10 16V	チップケミコン			01
C218	**WK145900**	CERAMIC CAPACITOR (CHIP)	0.47 10V K 1005	チップセラ			01
C219	**WK145900**	CERAMIC CAPACITOR (CHIP)	0.47 10V K 1005	チップセラ			01
C221	**US635100**	CERAMIC CAPACITOR (CHIP)	0.100 16V Z RECT.	チップセラ（F）			01
C222	**UF037100**	ELECTROLYTIC CAPACITOR(CHIP)	10 16V	チップケミコン			01
C223	**US635100**	CERAMIC CAPACITOR (CHIP)	0.100 16V Z RECT.	チップセラ（F）			01
C231	**US634100**	CERAMIC CAPACITOR (CHIP)	0.010 16V K RECT.	チップセラ（B）			01
C232	**US663270**	CERAMIC CAPACITOR (CHIP)	2700P 50V K RECT.	チップセラ（B）			
C233	**US663270**	CERAMIC CAPACITOR (CHIP)	2700P 50V K RECT.	チップセラ（B）			
C234	**UF06610R**	ELECTROLYTIC CAPACITOR(CHIP)	1 50V	チップケミコン			01
C235	**US662100**	CERAMIC CAPACITOR (CHIP)	100P 50V J RECT.	チップセラ（CH）			
C241	**US634100**	CERAMIC CAPACITOR (CHIP)	0.010 16V K RECT.	チップセラ（B）			01
C242	**US663270**	CERAMIC CAPACITOR (CHIP)	2700P 50V K RECT.	チップセラ（B）			
C243	**US663270**	CERAMIC CAPACITOR (CHIP)	2700P 50V K RECT.	チップセラ（B）			
C244	**UF06610R**	ELECTROLYTIC CAPACITOR(CHIP)	1 50V	チップケミコン			01
C245	**US662100**	CERAMIC CAPACITOR (CHIP)	100P 50V J RECT.	チップセラ（CH）			
C300	**US662100**	CERAMIC CAPACITOR (CHIP)	100P 50V J RECT.	チップセラ（CH）			
-308	**US662100**	CERAMIC CAPACITOR (CHIP)	100P 50V J RECT.	チップセラ（CH）			
C310	**US662100**	CERAMIC CAPACITOR (CHIP)	100P 50V J RECT.	チップセラ（CH）			
-317	**US662100**	CERAMIC CAPACITOR (CHIP)	100P 50V J RECT.	チップセラ（CH）			
C321	**US662100**	CERAMIC CAPACITOR (CHIP)	100P 50V J RECT.	チップセラ（CH）			
C322	**US662100**	CERAMIC CAPACITOR (CHIP)	100P 50V J RECT.	チップセラ（CH）			
C329	**US663100**	CERAMIC CAPACITOR (CHIP)	1000P 50V K RECT.	チップセラ（B）			01
C401	**US635100**	CERAMIC CAPACITOR (CHIP)	0.100 16V Z RECT.	チップセラ（F）			01
C403	**UF03810R**	ELECTROLYTIC CAPACITOR(CHIP)	100 16V	チップケミコン			01
C406	**US635100**	CERAMIC CAPACITOR (CHIP)	0.100 16V Z RECT.	チップセラ（F）			01
C414	**US635100**	CERAMIC CAPACITOR (CHIP)	0.100 16V Z RECT.	チップセラ（F）			01
C431	**US635100**	CERAMIC CAPACITOR (CHIP)	0.100 16V Z RECT.	チップセラ（F）			01
C432	**US635100**	CERAMIC CAPACITOR (CHIP)	0.100 16V Z RECT.	チップセラ（F）			01
C433	**WG251600**	CERAMIC CAPACITOR (CHIP)	4.7 6.3V K RECT.	チップセラ			01
C434	**US635100**	CERAMIC CAPACITOR (CHIP)	0.100 16V Z RECT.	チップセラ（F）			01
-437	**US635100**	CERAMIC CAPACITOR (CHIP)	0.100 16V Z RECT.	チップセラ（F）			01
C438	**WG251600**	CERAMIC CAPACITOR (CHIP)	4.7 6.3V K RECT.	チップセラ			01
C439	**US635100**	CERAMIC CAPACITOR (CHIP)	0.100 16V Z RECT.	チップセラ（F）			01
C440	**US635100**	CERAMIC CAPACITOR (CHIP)	0.100 16V Z RECT.	チップセラ（F）			01
C441	**WG251600**	CERAMIC CAPACITOR (CHIP)	4.7 6.3V K RECT.	チップセラ			01
C442	**US635100**	CERAMIC CAPACITOR (CHIP)	0.100 16V Z RECT.	チップセラ（F）			01
-444	**US635100**	CERAMIC CAPACITOR (CHIP)	0.100 16V Z RECT.	チップセラ（F）			01
C445	**UF037100**	ELECTROLYTIC CAPACITOR(CHIP)	10 16V	チップケミコン			01
C501	**US662100**	CERAMIC CAPACITOR (CHIP)	100P 50V J RECT.	チップセラ（CH）			
-512	**US662100**	CERAMIC CAPACITOR (CHIP)	100P 50V J RECT.	チップセラ（CH）			
C521	**US662220**	CERAMIC CAPACITOR (CHIP)	220P 50V K RECT.	チップセラ（B）			01
-532	**US662220**	CERAMIC CAPACITOR (CHIP)	220P 50V K RECT.	チップセラ（B）			01
C533	**US635100**	CERAMIC CAPACITOR (CHIP)	0.100 16V Z RECT.	チップセラ（F）			01
C534	**US635100**	CERAMIC CAPACITOR (CHIP)	0.100 16V Z RECT.	チップセラ（F）			01
C601	**US635100**	CERAMIC CAPACITOR (CHIP)	0.100 16V Z RECT.	チップセラ（F）			01
-604	**US635100**	CERAMIC CAPACITOR (CHIP)	0.100 16V Z RECT.	チップセラ（F）			01
C605	**UF037100**	ELECTROLYTIC CAPACITOR(CHIP)	10 16V	チップケミコン			01
C900	**US635100**	CERAMIC CAPACITOR (CHIP)	0.100 16V Z RECT.	チップセラ（F）			01
-929	**US635100**	CERAMIC CAPACITOR (CHIP)	0.100 16V Z RECT.	チップセラ（F）			01
C933	**US635100**	CERAMIC CAPACITOR (CHIP)	0.100 16V Z RECT.	チップセラ（F）			01
-940	**US635100**	CERAMIC CAPACITOR (CHIP)	0.100 16V Z RECT.	チップセラ（F）			01
D001	**VT332900**	DIODE	1SS355 TE-17 TP	ダイオード			01
D001	**WG139300**	DIODE	KDS4148U-RTK/P TE	ダイオード			
D002	**VT332900**	DIODE	1SS355 TE-17 TP	ダイオード			01
D002	**WG139300**	DIODE	KDS4148U-RTK/P TE	ダイオード			
DA401	**V9424900**	DIODE ARRAY	1SS372 TE85L	ダイオードアレイ			01
DA401	**WV973800**	DIODE ARRAY	DB3J316F0L 0.10A X	ダイオードアレイ			
DA402	**V9424900**	DIODE ARRAY	1SS372 TE85L	ダイオードアレイ			01
DA402	**WV973800**	DIODE ARRAY	DB3J316F0L 0.10A X	ダイオードアレイ			
DA411	**V9424900**	DIODE ARRAY	1SS372 TE85L	ダイオードアレイ			01
DA411	**WV973800**	DIODE ARRAY	DB3J316F0L 0.10A X	ダイオードアレイ			
DA412	**V9424900**	DIODE ARRAY	1SS372 TE85L	ダイオードアレイ			01
DA412	**WV973800**	DIODE ARRAY	DB3J316F0L 0.10A X	ダイオードアレイ			
IC001	**YA876A01**	IC	SWL01U	IC	CPU		05
* IC101	**YE164C00**	IC	MX29GL256ELT2I-90Q	IC	FLASH ROM PROG./WAVE		
IC102	**X5896A00**	IC	SN74LVC1G08DCKR	IC	AND GATE		01
IC102	**X5896B00**	IC	SN74LVC1G08DCKR AN	IC			01
IC102	**X6068A0R**	IC	TC7SZ08FU	IC			01

✻: New Parts

RANK: Japan only

DMLCD

REF NO.	PART NO.	DESCRIPTION	部品名	REMARKS	QTY	RANK
IC102	**YA350A00**	IC	74LVC1G08GW	I C		01
IC111	**X4374A0R**	IC	S-80136ANMC-JCVT2G	I C SYSTEM RESET		01
IC111	**X5888A0R**	IC	BD45365G	I C		01
IC121	**X3042E00**	IC	MX29LV160DBTI-70G	I C FLASH ROM 16M		03
IC131	**X2590C00**	IC	W9816G6IH-7	I C SDRAM 16M		04
IC131	**X5693C00**	IC	M12L16161A-7TG2K	I C		04
IC131	**X5693D00**	IC	M12L16161A-7TG2K S	I C		
IC201	**X6040A01**	IC	AK4385ET	I C DAC		03
IC202	**YA326A00**	IC	BA4580RF-E2	I C OP AMP		01
IC203	**YC287A00**	IC	RP130Q181D-TR-F	I C REGULATOR +1.8V		01
IC401	**X7569A00**	IC	R5520H001B-T1-FE	I C USB HIGH-SIDE POWER SW.		03
* IC402	**YD645A00**	IC	R8A66597FP#RF1S	I C USB2.0 HOST CONTROLLER		
IC403	**X5647A00**	IC	SN74LV32APWR	I C OR		01
IC403	**XY945B00**	IC	TC74VHC32FT(EL,K)	I C		
IC501	**X7284A00**	IC	SN74LV138APWR	I C DECODER		01
IC501	**XZ495B00**	IC	TC74VHC138FT(EL,K)	I C		01
IC502	**X7284A00**	IC	SN74LV138APWR	I C DECODER		01
IC502	**XZ495B00**	IC	TC74VHC138FT(EL,K)	I C		01
IC601	**X3148A0R**	IC	NT3881DFG-01	I C LCD DRIVER		05
IC601	**XZ987A0R**	IC	ML9040A-B01GAZ03A	I C		05
IC601	**YC471A00**	IC	SPLC780D1-001A-HQ1	I C		
IC801	**YD113A00**	IC	RP131H331D-T1-FE	I C REGULATOR +3.3V		01
L401	**WG834800**	COIL	DLW21HN900SQ2L	コイル		01
L411	**WE863900**	CHIP INDUCTOR	DLP11SN900HL2L	チップインダクタ		01
L431	**WK139000**	CHIP INDUCTOR	600 ohm BK1005HM601-T	チップインダクタ		01
L601	**WK139000**	CHIP INDUCTOR	600 ohm BK1005HM601-T	チップインダクタ		01
R003	**RD457100**	CARBON RESISTOR (CHIP)	10.0K 63M J RECT.	チップ抵抗		01
R006	**RD457100**	CARBON RESISTOR (CHIP)	10.0K 63M J RECT.	チップ抵抗		01
R007	**RD459100**	CARBON RESISTOR (CHIP)	1.0M 63M J RECT.	チップ抵抗		01
R008	**RD45547R**	CARBON RESISTOR (CHIP)	470.0 63M J RECT.	チップ抵抗		01
R009	**RD457100**	CARBON RESISTOR (CHIP)	10.0K 63M J RECT.	チップ抵抗		01
-012	**RD457100**	CARBON RESISTOR (CHIP)	10.0K 63M J RECT.	チップ抵抗		01
R013	**RD456820**	CARBON RESISTOR (CHIP)	8.2K 63M J RECT.	チップ抵抗		01
R014	**RD456220**	CARBON RESISTOR (CHIP)	2.2K 63M J RECT.	チップ抵抗		01
R015	**RD455100**	CARBON RESISTOR (CHIP)	100.0 63M J RECT.	チップ抵抗		01
-017	**RD455100**	CARBON RESISTOR (CHIP)	100.0 63M J RECT.	チップ抵抗		01
R018	**RD45522R**	CARBON RESISTOR (CHIP)	220.0 63M J RECT.	チップ抵抗		01
R019	**RD45747R**	CARBON RESISTOR (CHIP)	47.0K 63M J RECT.	チップ抵抗		01
-022	**RD45747R**	CARBON RESISTOR (CHIP)	47.0K 63M J RECT.	チップ抵抗		01
R023	**WU570200**	CARBON RESISTOR (CHIP)	8.2K 63M D RECT.	チップ抵抗		01
R024	**WU568800**	CARBON RESISTOR (CHIP)	2.2K 63M D RECT.	チップ抵抗		01
R025	**RD457100**	CARBON RESISTOR (CHIP)	10.0K 63M J RECT.	チップ抵抗		01
R026	**RD456220**	CARBON RESISTOR (CHIP)	2.2K 63M J RECT.	チップ抵抗		01
R027	**RD458470**	CARBON RESISTOR (CHIP)	470.0K 63M J RECT.	チップ抵抗		
-029	**RD458470**	CARBON RESISTOR (CHIP)	470.0K 63M J RECT.	チップ抵抗		
R030	**RD454220**	CARBON RESISTOR (CHIP)	22.0 63M J RECT.	チップ抵抗		01
R031	**RD454220**	CARBON RESISTOR (CHIP)	22.0 63M J RECT.	チップ抵抗		01
R032	**RD45515R**	CARBON RESISTOR (CHIP)	150.0 63M J RECT.	チップ抵抗		01
R033	**RD455100**	CARBON RESISTOR (CHIP)	100.0 63M J RECT.	チップ抵抗		01
R034	**RD45747R**	CARBON RESISTOR (CHIP)	47.0K 63M J RECT.	チップ抵抗		01
R037	**RD455100**	CARBON RESISTOR (CHIP)	100.0 63M J RECT.	チップ抵抗		01
R101	**RD457100**	CARBON RESISTOR (CHIP)	10.0K 63M J RECT.	チップ抵抗		01
R111	**RD457100**	CARBON RESISTOR (CHIP)	10.0K 63M J RECT.	チップ抵抗		01
R121	**RD457100**	CARBON RESISTOR (CHIP)	10.0K 63M J RECT.	チップ抵抗		01
R201	**RD45747R**	CARBON RESISTOR (CHIP)	47.0K 63M J RECT.	チップ抵抗		01
R202	**RD456100**	CARBON RESISTOR (CHIP)	1.0K 63M J RECT.	チップ抵抗		01
R203	**RD45747R**	CARBON RESISTOR (CHIP)	47.0K 63M J RECT.	チップ抵抗		01
R204	**RD456100**	CARBON RESISTOR (CHIP)	1.0K 63M J RECT.	チップ抵抗		01
R205	**RD456100**	CARBON RESISTOR (CHIP)	1.0K 63M J RECT.	チップ抵抗		01
R231	**RD456330**	CARBON RESISTOR (CHIP)	3.3K 63M J RECT.	チップ抵抗		
R232	**RD456330**	CARBON RESISTOR (CHIP)	3.3K 63M J RECT.	チップ抵抗		
R233	**RD456220**	CARBON RESISTOR (CHIP)	2.2K 63M J RECT.	チップ抵抗		01
R234	**RD45518R**	CARBON RESISTOR (CHIP)	180.0 63M J RECT.	チップ抵抗		01
R235	**RD45518R**	CARBON RESISTOR (CHIP)	180.0 63M J RECT.	チップ抵抗		01
R236	**RD456220**	CARBON RESISTOR (CHIP)	2.2K 63M J RECT.	チップ抵抗		01
R237	**RD455100**	CARBON RESISTOR (CHIP)	100.0 63M J RECT.	チップ抵抗		01
R241	**RD456330**	CARBON RESISTOR (CHIP)	3.3K 63M J RECT.	チップ抵抗		
R242	**RD456330**	CARBON RESISTOR (CHIP)	3.3K 63M J RECT.	チップ抵抗		
R243	**RD456220**	CARBON RESISTOR (CHIP)	2.2K 63M J RECT.	チップ抵抗		01
R244	**RD45518R**	CARBON RESISTOR (CHIP)	180.0 63M J RECT.	チップ抵抗		01

*: New Parts

RANK: Japan only

DMLCD and MV/PB/PNC/PNL/PNP/TW

REF NO.	PART NO.	DESCRIPTION		部品名	REMARKS	QTY	RANK
R245	**RD45518R**	CARBON RESISTOR (CHIP)	180.0 63M J RECT.	チップ抵抗			01
R246	**RD456220**	CARBON RESISTOR (CHIP)	2.2K 63M J RECT.	チップ抵抗			01
R247	**RD455100**	CARBON RESISTOR (CHIP)	100.0 63M J RECT.	チップ抵抗			01
R248	**RD456100**	CARBON RESISTOR (CHIP)	1.0K 63M J RECT.	チップ抵抗			01
R249	**RD45615R**	CARBON RESISTOR (CHIP)	1.5K 63M J RECT.	チップ抵抗			01
R300	**RD45747R**	CARBON RESISTOR (CHIP)	47.0K 63M J RECT.	チップ抵抗			01
-308	**RD45747R**	CARBON RESISTOR (CHIP)	47.0K 63M J RECT.	チップ抵抗			01
R322	**RD456100**	CARBON RESISTOR (CHIP)	1.0K 63M J RECT.	チップ抵抗			01
R401	**RD45000R**	CARBON RESISTOR (CHIP)	0.00 63M J RECT.	チップ抵抗			01
R402	**RD45000R**	CARBON RESISTOR (CHIP)	0.00 63M J RECT.	チップ抵抗			01
R403	**RD457220**	CARBON RESISTOR (CHIP)	22.0K 63M J RECT.	チップ抵抗			01
R411	**RD456220**	CARBON RESISTOR (CHIP)	2.2K 63M J RECT.	チップ抵抗			01
R412	**RD456270**	CARBON RESISTOR (CHIP)	2.7K 63M J RECT.	チップ抵抗			01
R413	**RD457100**	CARBON RESISTOR (CHIP)	10.0K 63M J RECT.	チップ抵抗			01
R414	**RD45747R**	CARBON RESISTOR (CHIP)	47.0K 63M J RECT.	チップ抵抗			01
R415	**RD457100**	CARBON RESISTOR (CHIP)	10.0K 63M J RECT.	チップ抵抗			01
R416	**RD45615R**	CARBON RESISTOR (CHIP)	1.5K 63M J RECT.	チップ抵抗			01
R417	**RD45747R**	CARBON RESISTOR (CHIP)	47.0K 63M J RECT.	チップ抵抗			01
R418	**RD457100**	CARBON RESISTOR (CHIP)	10.0K 63M J RECT.	チップ抵抗			01
R419	**RD45612R**	CARBON RESISTOR (CHIP)	1.2K 63M J RECT.	チップ抵抗			01
R420	**RD456100**	CARBON RESISTOR (CHIP)	1.0K 63M J RECT.	チップ抵抗			01
R441	**RF456560**	CARBON RESISTOR (CHIP)	5.6K D RECT.	チップ抵抗			
R442	**RD457100**	CARBON RESISTOR (CHIP)	10.0K 63M J RECT.	チップ抵抗			01
R443	**RD457100**	CARBON RESISTOR (CHIP)	10.0K 63M J RECT.	チップ抵抗			01
R445	**RD455100**	CARBON RESISTOR (CHIP)	100.0 63M J RECT.	チップ抵抗			01
-447	**RD455100**	CARBON RESISTOR (CHIP)	100.0 63M J RECT.	チップ抵抗			01
R450	**RD45000R**	CARBON RESISTOR (CHIP)	0.00 63M J RECT.	チップ抵抗			01
R601	**RD45615R**	CARBON RESISTOR (CHIP)	1.5K 63M J RECT.	チップ抵抗			01
R602	**RD45522R**	CARBON RESISTOR (CHIP)	220.0 63M J RECT.	チップ抵抗			01
R603	**RD454680**	CARBON RESISTOR (CHIP)	68.0 63M J RECT.	チップ抵抗			01
R604	**RD457100**	CARBON RESISTOR (CHIP)	10.0K 63M J RECT.	チップ抵抗			01
R605	**RD456220**	CARBON RESISTOR (CHIP)	2.2K 63M J RECT.	チップ抵抗			01
-609	**RD456220**	CARBON RESISTOR (CHIP)	2.2K 63M J RECT.	チップ抵抗			01
R610	**RF45791R**	CARBON RESISTOR (CHIP)	91.0K D RECT.	チップ抵抗			
R614	**RD45000R**	CARBON RESISTOR (CHIP)	0.00 63M J RECT.	チップ抵抗			01
R615	**RD45000R**	CARBON RESISTOR (CHIP)	0.00 63M J RECT.	チップ抵抗			01
R900	**RD45000R**	CARBON RESISTOR (CHIP)	0.00 63M J RECT.	チップ抵抗			01
R901	**RD45515R**	CARBON RESISTOR (CHIP)	150.0 63M J RECT.	チップ抵抗			01
R902	**RD45515R**	CARBON RESISTOR (CHIP)	150.0 63M J RECT.	チップ抵抗			01
RA001	**WH213400**	RESISTOR ARRAY	47K X 4	抵抗アレイ			01
-004	**WH213400**	RESISTOR ARRAY	47K X 4	抵抗アレイ			01
RA301	**WH209400**	RESISTOR ARRAY	1.0K X 4	抵抗アレイ			
RA302	**WH209400**	RESISTOR ARRAY	1.0K X 4	抵抗アレイ			
RA303	**WH213400**	RESISTOR ARRAY	47K X 4	抵抗アレイ			01
RA304	**WH213400**	RESISTOR ARRAY	47K X 4	抵抗アレイ			01
RA501	**WH209400**	RESISTOR ARRAY	1.0K X 4	抵抗アレイ			
-503	**WH209400**	RESISTOR ARRAY	1.0K X 4	抵抗アレイ			
RA504	**WH213400**	RESISTOR ARRAY	47K X 4	抵抗アレイ			01
-506	**WH213400**	RESISTOR ARRAY	47K X 4	抵抗アレイ			01
RA521	**WH207000**	RESISTOR ARRAY	100 X 4	抵抗アレイ			01
-523	**WH207000**	RESISTOR ARRAY	100 X 4	抵抗アレイ			01
RA524	**WH206200**	RESISTOR ARRAY	47 X 4	抵抗アレイ			01
-531	**WH206200**	RESISTOR ARRAY	47 X 4	抵抗アレイ			01
TH601	**V9140600**	CHIP THERMISTOR	ERTJ1VT152J 1.5K	チップサーミスタ			
TR300	**WB12320R**	TRANSISTOR ARRAY	IMB10A T110	トランジスタアレイ			05
TR302	**WB12320R**	TRANSISTOR ARRAY	IMB10A T110	トランジスタアレイ			05
TR304	**WB12320R**	TRANSISTOR ARRAY	IMB10A T110	トランジスタアレイ			05
TR306	**WB12320R**	TRANSISTOR ARRAY	IMB10A T110	トランジスタアレイ			05
TR308	**WB12320R**	TRANSISTOR ARRAY	IMB10A T110	トランジスタアレイ			05
TR309	**VY67760R**	DIGITAL TRANSISTOR	DTC123JKA TP	デジタルトランジスタ			01
TR401	**VV556500**	TRANSISTOR	2SA1037AK Q,R,S TP	トランジスタ 2SA			01
TR401	**WC529500**	TRANSISTOR	KTA1504S-Y,GR-RTK/	トランジスタ			
TR402	**VV556400**	TRANSISTOR	2SC2412K Q,R,S TP	トランジスタ			01
TR403	**VV556400**	TRANSISTOR	2SC2412K Q,R,S TP	トランジスタ			01
TR404	**VV556500**	TRANSISTOR	2SA1037AK Q,R,S TP	トランジスタ 2SA			01
TR404	**WC529500**	TRANSISTOR	KTA1504S-Y,GR-RTK/	トランジスタ			
X101	**WE19440R**	QUARTZ CRYSTAL UNIT	16.9344MHz HC-49S-SM	水晶振動子			01
X102	**WU303100**	RESONATOR QUARTZ	C3SD48.0MGE 48MHz	水晶振動器			
*	**WZ270100**	CIRCUIT BOARD	MV	MV シート	(WZ26940)(YD799C0)		

✻: New Parts

RANK: Japan only

MV/PB/PNC/PNL/PNP/TW and PNR and 61L-MK ad 61H-MK

	REF NO.	PART NO.	DESCRIPTION		部品名	REMARKS	QTY	RANK
*		**WZ270200**	CIRCUIT BOARD	PB	ＰＢシート	(WZ26940)(YD799C0)		
*		**WZ269700**	CIRCUIT BOARD	PNC	ＰＮＣシート	(WZ26940)(YD799C0)		
*		**WZ269600**	CIRCUIT BOARD	PNL	ＰＮＬシート	(WZ26940)(YD799C0)		
*		**WZ269800**	CIRCUIT BOARD	PNP	ＰＮＰシート	(WZ26940)(YD799C0)		
*		**WZ270300**	CIRCUIT BOARD	TW	ＴＷシート	(WZ26940)(YD799C0)		
	CN200	**VI878300**	CONNECTOR	51048 5P TE	ケーブルホルダー			01
	CN200	**VZ34170R**	CONNECTOR	51048 5P TE	ケーブルホルダー天津			
	CN800	**VB85880R**	CONNECTOR	PH 9P SE	ベースポスト			01
	CN802	**VI878100**	CONNECTOR	51048 3P TE	ケーブルホルダー			01
	CN802	**VZ34160R**	CONNECTOR	51048 3P TE	ケーブルホルダー天津			
	CN803	**VB38990R**	CONNECTOR	PH 3P TE	ベースポスト			01
	CN804	**VE35260R**	CONNECTOR	PH 14P TE	ベースポスト			01
	CN806	**VI878400**	CONNECTOR	51048 6P TE	ケーブルホルダー			01
	CN806	**VY66850R**	CONNECTOR	51048 6P TE	ケーブルホルダー天津			01
	CN900	**VB85880R**	CONNECTOR	PH 9P SE	ベースポスト			01
	CN901	**VK024700**	CONNECTOR	52147 3P TE	ワイヤートラップ			01
	CN902	**VI878100**	CONNECTOR	51048 3P TE	ケーブルホルダー			01
	CN905	**VI878000**	CONNECTOR	51048 2P TE	ケーブルホルダー			01
	CN905	**VY66830R**	CONNECTOR	51048 2P TE	ケーブルホルダー天津			
	LD868	**WM279800**	LED	BL-B6141K-FP11-AT	LED	STYLE		01
	LD960	**WM279800**	LED	BL-B6141K-FP11-AT	LED	PORTAMENTO		01
	VR2	**VZ48630R**	ROTARY VR	B10K EVJ05DF20B14	ロータリーVR	PITCH BEND		03
	VR200	**WC70980R**	ROTARY VARIABLE RESISTOR	A 5.0K XV014111YGP	二連ロータリーVR	MASTER VOLUME		02
	WH001	**--**	WIRING ASSEMBLY	3P L=100	束線	(ZA17230)		
	WH002	**--**	WIRING ASSEMBLY	5P L=200	束線	(ZA26040)		
	WH003	**--**	WIRING ASSEMBLY	3P L=50	束線	(ZA25600)		
	WH004	**--**	WIRING ASSEMBLY	6P L=50	束線	(ZA17690)		
	WH005	**--**	WIRING ASSEMBLY	TWL 2P L=100	ＴＷＬ束線	(ZA37800)		
	D605	**VB941200**	DIODE	1SS133,1SS176 TE-5	ダイオード			01
	-608	**VB941200**	DIODE	1SS133,1SS176 TE-5	ダイオード			01
	D605	**VD631600**	DIODE	1SS133,176,HSS104	ダイオード			01
	-608	**VD631600**	DIODE	1SS133,176,HSS104	ダイオード			01
	D605	**VV43780R**	DIODE	1N4148(DO-34)	ダイオード天津製			01
	-608	**VV43780R**	DIODE	1N4148(DO-34)	ダイオード天津製			01
	D800	**VB941200**	DIODE	1SS133,1SS176 TE-5	ダイオード			01
	-808	**VB941200**	DIODE	1SS133,1SS176 TE-5	ダイオード			01
	D800	**VD631600**	DIODE	1SS133,176,HSS104	ダイオード			01
	-808	**VD631600**	DIODE	1SS133,176,HSS104	ダイオード			01
	D800	**VV43780R**	DIODE	1N4148(DO-34)	ダイオード天津製			01
	-808	**VV43780R**	DIODE	1N4148(DO-34)	ダイオード天津製			01
	D960	**VB941200**	DIODE	1SS133,1SS176 TE-5	ダイオード			01
	D960	**VD631600**	DIODE	1SS133,176,HSS104	ダイオード			01
	D960	**VV43780R**	DIODE	1N4148(DO-34)	ダイオード天津製			01
*		**WZ269500**	CIRCUIT BOARD	PNR	ＰＮＲシート	(WZ69670)(YD925C0)		
	CN700	**VE35260R**	CONNECTOR	PH 14P TE	ベースポスト			01
	CN701	**VI878000**	CONNECTOR	51048 2P TE	ケーブルホルダー			01
	CN701	**VY66830R**	CONNECTOR	51048 2P TE	ケーブルホルダー天津			
	CN702	**VI878000**	CONNECTOR	51048 2P TE	ケーブルホルダー			01
	CN702	**VY66830R**	CONNECTOR	51048 2P TE	ケーブルホルダー天津			
	LD735	**WM279800**	LED	BL-B6141K-FP11-AT	LED	VOICE		01
	WH701	**--**	WIRING ASSEMBLY	2P L=75	束線	(ZA25430)		
	WH702	**--**	WIRING ASSEMBLY	TWR 2P L=320	ＴＷＲ束線	(ZA37790)		
	D700	**VB941200**	DIODE	1SS133,1SS176 TE-5	ダイオード			01
	-708	**VB941200**	DIODE	1SS133,1SS176 TE-5	ダイオード			01
	D700	**VD631600**	DIODE	1SS133,176,HSS104	ダイオード			01
	-708	**VD631600**	DIODE	1SS133,176,HSS104	ダイオード			01
	D700	**VV43780R**	DIODE	1N4148(DO-34)	ダイオード天津製			01
	-708	**VV43780R**	DIODE	1N4148(DO-34)	ダイオード天津製			01
		V869530R	CIRCUIT BOARD	61L-MK	シート61L	(V869520)(X2336C0)		04
	CN04	**VK02560R**	CONNECTOR	52147 12P TE	ワイヤートラップ			01
	CN05	**VK025100**	CONNECTOR	52147 7P TE	ワイヤートラップ			01
	D001	**VB941200**	DIODE	1SS133,1SS176 TE-5	ダイオード			01
	-072	**VB941200**	DIODE	1SS133,1SS176 TE-5	ダイオード			01
	D001	**WP977700**	DIODE	HSS4148TA-E Q TE	ダイオード			
	-072	**WP977700**	DIODE	HSS4148TA-E Q TE	ダイオード			
		V869550R	CIRCUIT BOARD	61H-MK	シート61H	(V869540)(X2335D0)		06
	CN01	**VK02560R**	CONNECTOR	52147 12P TE	ワイヤートラップ			01

*: New Parts

RANK: Japan only

61H-MK

	REF NO.	PART NO.	DESCRIPTION		部品名	REMARKS	QTY	RANK
	CN02	**VK024900**	CONNECTOR	52147 5P TE	ワイヤートラップ			01
	CN03	**VK02560R**	CONNECTOR	52147 12P TE	ワイヤートラップ			01
	D073	**VB941200**	DIODE	1SS133,1SS176 TE-5	ダイオード			01
	-122	**VB941200**	DIODE	1SS133,1SS176 TE-5	ダイオード			01
	D073	**WP977700**	DIODE	HSS4148TA-E Q TE	ダイオード			
	-122	**WP977700**	DIODE	HSS4148TA-E Q TE	ダイオード			
*		**X0159B00**	LOUD SPEAKER	3.0cm	スピーカ	TWEETER		
*		**YE096A00**	LOUD SPEAKER	12.0cm 6ohm 6W	スピーカ	WOOFER		
*		**WZ330100**	LCD DISPLAY		液晶ディスプレイ			

*: New Parts

RANK: Japan only

■ KB-290/KB-291 BLOCK DIAGRAM

KB-290/KB-291

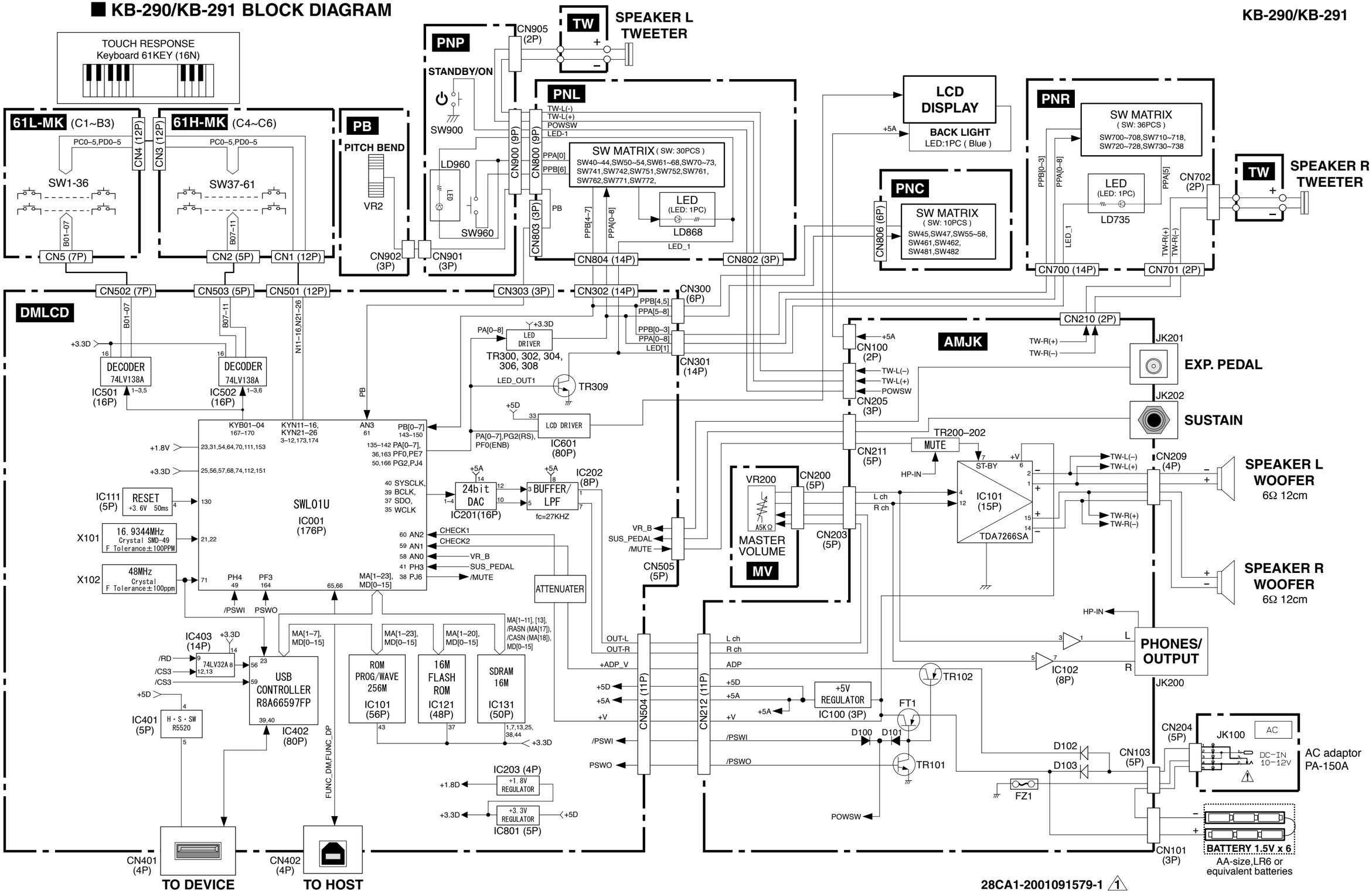

28CA1-2001091579-1 1

28CA1-2001091579-1 1

■ KB-290/KB-291 BLOCK DIAGRAM

■ KB-290/KB-291 OVERALL CIRCUIT DIAGRAM (AMJK, DMLCD, MV, PB, PNC, PNL, PNR, PNP, TW, 61H-MK, 61L-MK)

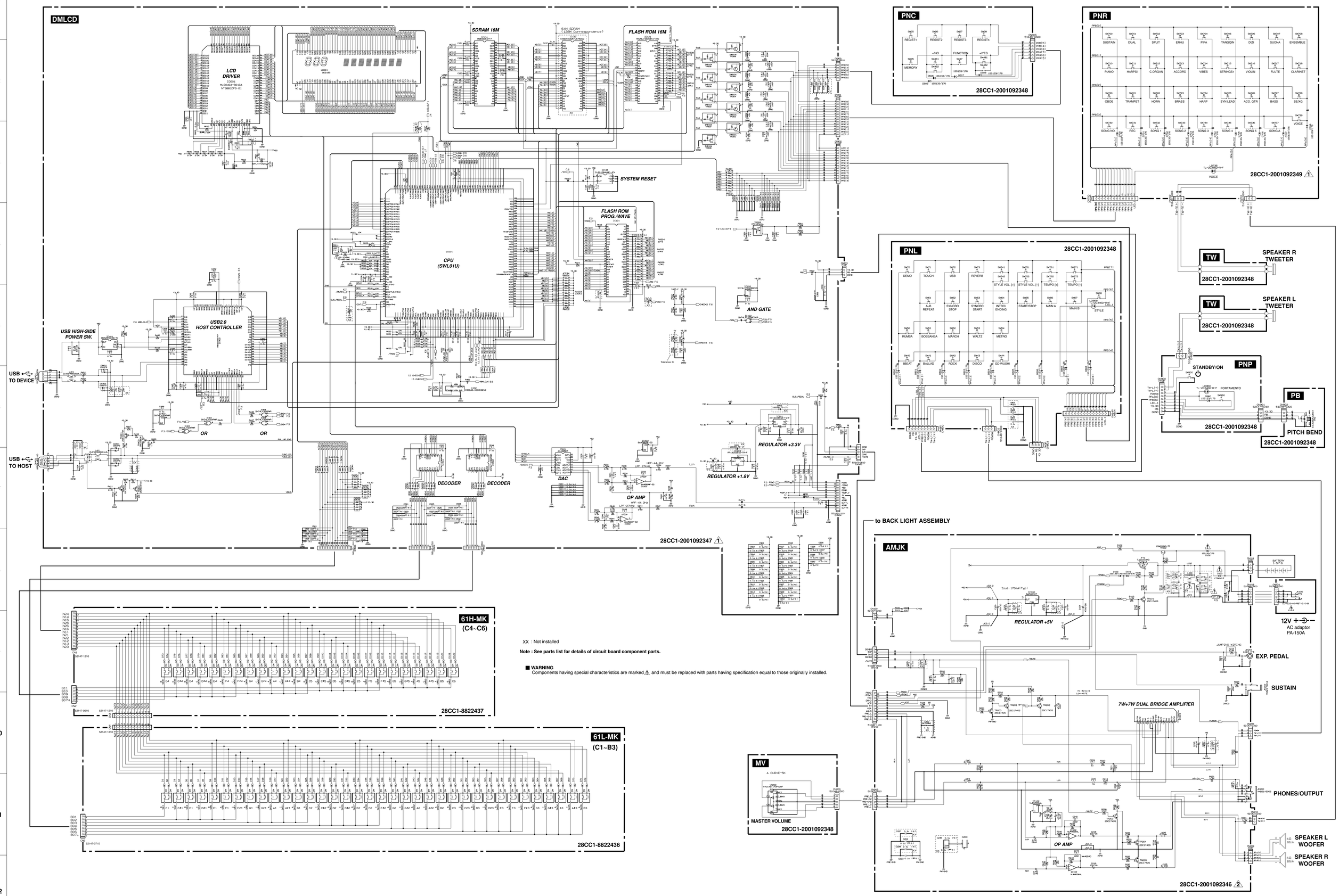

XX : Not installed

Note : See parts list for details of circuit board component parts.

■ **WARNING**
Components having special characteristics are marked ⚠ and must be replaced with parts having specification equal to those originally installed.