Digital Keyboard

KB-190
KB-191

SERVICE MANUAL

● **KB-190**



● **KB-191**



■ CONTENTS

SPECIFICATIONS 3
PANEL LAYOUT 4
CIRCUIT BOARD LAYOUT & WIRING 6
DISASSEMBLY PROCEDURE 8
LSI PIN DESCRIPTION 14
CIRCUIT BOARDS 17
TEST PROGRAM 24
USER DATA BACKUP 28
INITIALIZATION 29
SYSTEM BOOTING FLOWCHART 30
DMLCD CIRCUIT BOARD CHECK METHOD 31
PARTS LIST
BLOCK DIAGRAM
OVERALL CIRCUIT DIAGRAM

PK 001887

YAMAHA
HAMAMATSU, JAPAN

Copyright (c) Yamaha Corporation. All rights reserved. PDF '12.12

IMPORTANT NOTICE

This manual has been provided for the use of authorized Yamaha Retailers and their service personnel. It has been assumed that basic service procedures inherent to the industry, and more specifically Yamaha Products, are already known and understood by the users, and have therefore not been restated.

WARNING : Failure to follow appropriate service and safety procedures when servicing this product may result in personal injury, destruction of expensive components and failure of the product to perform as specified. For these reasons, we advise all Yamaha product owners that all service required should be performed by an authorized Yamaha Retailer or the appointed service representative.

IMPORTANT : This presentation or sale of this manual to any individual or firm does not constitute authorization certification, recognition of any applicable technical capabilities, or establish a principal-agent relationship of any form.

The data provided is belived to be accurate and applicable to the unit(s) indicated on the cover. The research engineering, and service departments of Yamaha are continually striving to improve Yamaha products. Modifications are, therefore, inevitable and changes in specification are subject to change without notice or obligation to retrofit. Should any discrepancy appear to exist, please contact the distributor's Service Division.

WARNING : Static discharges can destroy expensive components. Discharge any static electricity your body may have accumulated by grounding yourself to the ground bus in the unit (heavy gauge black wires connect to this bus.)

IMPORTANT : Turn the unit OFF during disassembly and parts replacement. Recheck all work before you apply power to the unit.

WARNING: This product contains chemicals known to the State of California to cause cancer, or birth defects or other reproductive harm.

DO NOT PLACE SOLDER, ELECTRICAL/ELECTRONIC OR PLASTIC COMPONENTS IN YOUR MOUTH FOR ANY REASON WHAT SO EVER!

Avoid prolonged, unprotected contact between solder and your skin! When soldering, do not inhale solder fumes or expose eyes to solder/flux vapor!

If you come in contact with solder or components located inside the enclosure of this product, wash your hands before handling food.

WARNING

Components having special characteristics are marked ⚠ and must be replaced with parts having specification equal to those originally installed.

SAVING DATA

Some data items are automatically saved as backup data in the internal memory even if you turn the power off. Saved data may be lost due to malfunction or incorrect operation. Save important data to a USB storage device or a computer. To protect against data loss through media damage, we recommend that you save your important data onto two USB storage devices/external media.

SPECIFICATIONS

尺寸/重量	尺寸 （宽 × 深 × 高）		947 x 401 x 160 mm
	重量		7.0 kg （不包括电池）
控制接口	键盘	琴键数	61
		力度感响应	是
	其它控制器	弯音	是
		滑音	是
	显示屏	类型	LCD显示画面
		背光	是
		语言	英文
	面板	语言	中文
音色	音源	音源技术	AWM立体声采样
	复音	复音数 （最大）	32
	预置	音色数	512 音色 （包括15 个鼓/中国打击乐器组/声音效果 + 336 个 XGlite 音色）
	兼容性	GM/XGlite	是
效果器	类型	混响	10 个类型 （包括超宽立体声）
		合唱	4种类型
		和声	26种类型
		琶音	–
	功能	双音色	是
		分割音色	是
		面板延音	是
伴奏型	预置	预置伴奏风格数	150
		指弹和弦模式	多重指法
		伴奏控制	和弦伴奏开/关、同步起动、起动/停止、前奏/尾声、主奏/自动插入
	自定义	用户伴奏	–
	其它功能	单触设置 （OTS）	是
乐曲	示范乐曲	示范曲数量	15
	录音	乐曲数量	5
		音轨数量	6
		数据容量	所有用户乐曲约10000个音符（当仅录制旋律轨时） 所有用户乐曲约5500个和弦（当仅录制伴奏轨时）
	兼容的数据格式	回放	SMF （格式0和1）
		录音	原始文件格式
功能	注册记忆	预设注册数量	16
		自定义注册数量	16
	整体控制	移调	-12-0-+12
		调音	427.0-440.0-453.0 Hz
存储	内置存储器		约1.79 MB
	外接驱动器		–
连接	DC IN （直流输入）		直流输入 12 V 插口
	耳机/输出		［耳机/输出］ x 1
	延音踏板		［延音踏板］ x 1
	表现踏板		［表现踏板］ x 1
功放			6W x 2
音箱			12cm x 2 + 3cm x 2
电源	电源	适配器	PA-150A或Yamaha推荐的相应产品
		电池	六节电池 （1.5V AA 碱性电池/锰电池或1.2V 充电 Ni-MH电池）
	耗电量		• 11W （KB-190/191） • 14W （KB-190/191和 AC电源适配器）
附件	包含附件		• AC电源适配器 （PA-150A或Yamaha推荐的相应产品） • 谱架 • 使用说明书 • Online Member Product Registration （在线会员产品注册） • 保证书
	可选附件		• 踏板：FC4, FC5，表现踏板：EP-1

PANEL LAYOUT

顶部面板

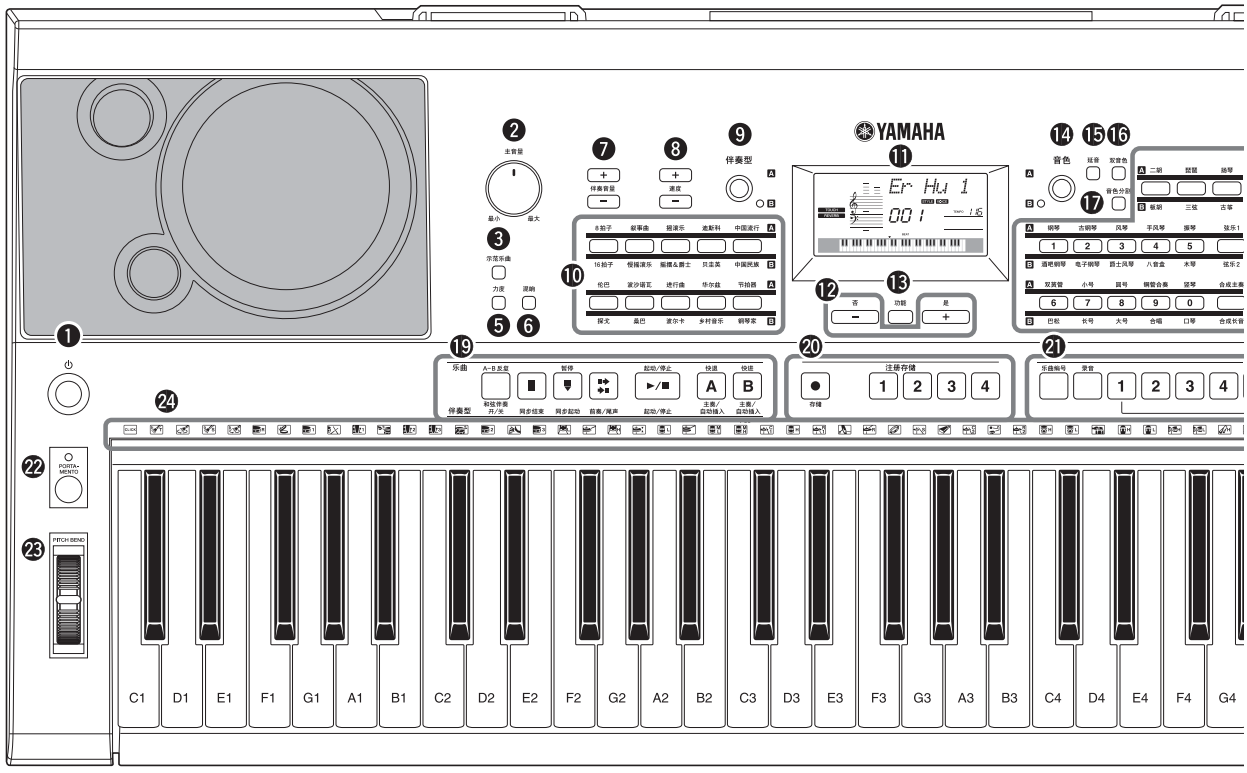

❶ [⏻] (待机 / 开）开关
❷ [主音量] 旋钮
❸ [示范乐曲] 按钮

❺ [力度] 按钮
❻ [混响] 按钮
❼ 伴奏音量 [+], [-] 按钮
❽ 速度 [+], [-] 按钮
❾ [伴奏型] 按钮
❿ 伴奏目录按钮
⓫ 显示屏
⓬ [-/ 否], [+/ 是] 按钮
⓭ [功能] 按钮

⓮ [音色] 按钮
⓯ [延音] 按钮
⓰ [双音色] 按钮
⓱ [音色分割] 按钮
⓲ 音色目录按钮
⓳ 乐曲 / 伴奏型控制按钮
⓴ 注册存储按钮
㉑ 乐曲存储按钮
㉒ [PORTAMENTO] (滑音）按钮
㉓ [PITCH BEND] (弯音）轮
㉔ 打击乐器组图标

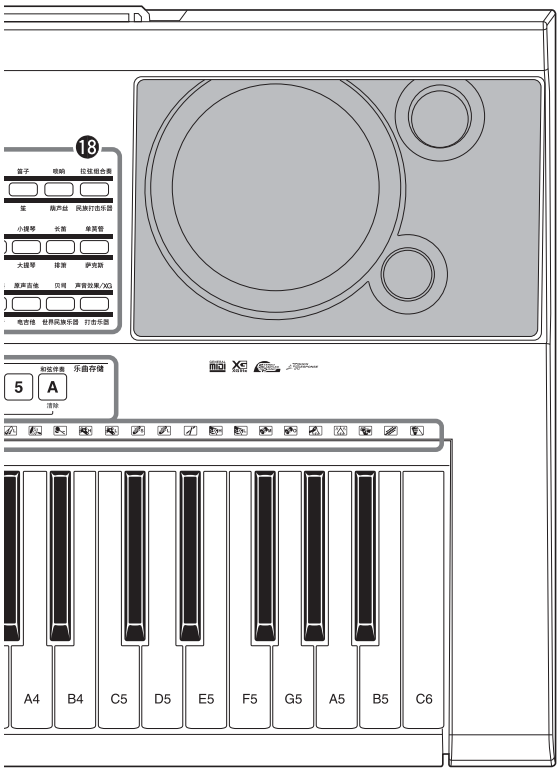

后面板

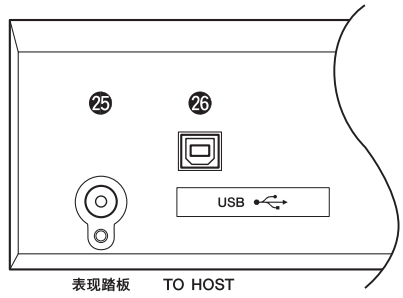

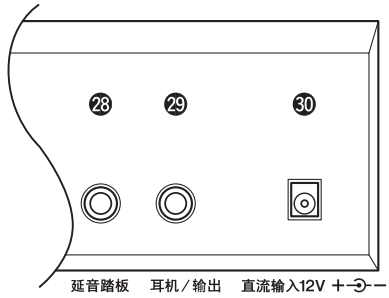

㉕［表现踏板］插孔
㉖ USB［TO HOST］端口

㉘［延音踏板］插孔
㉙［耳机 / 输出］插孔
㉚ 直流输入插口

■ CIRCUIT BOARD LAYOUT & WIRING

● **Bottom view**

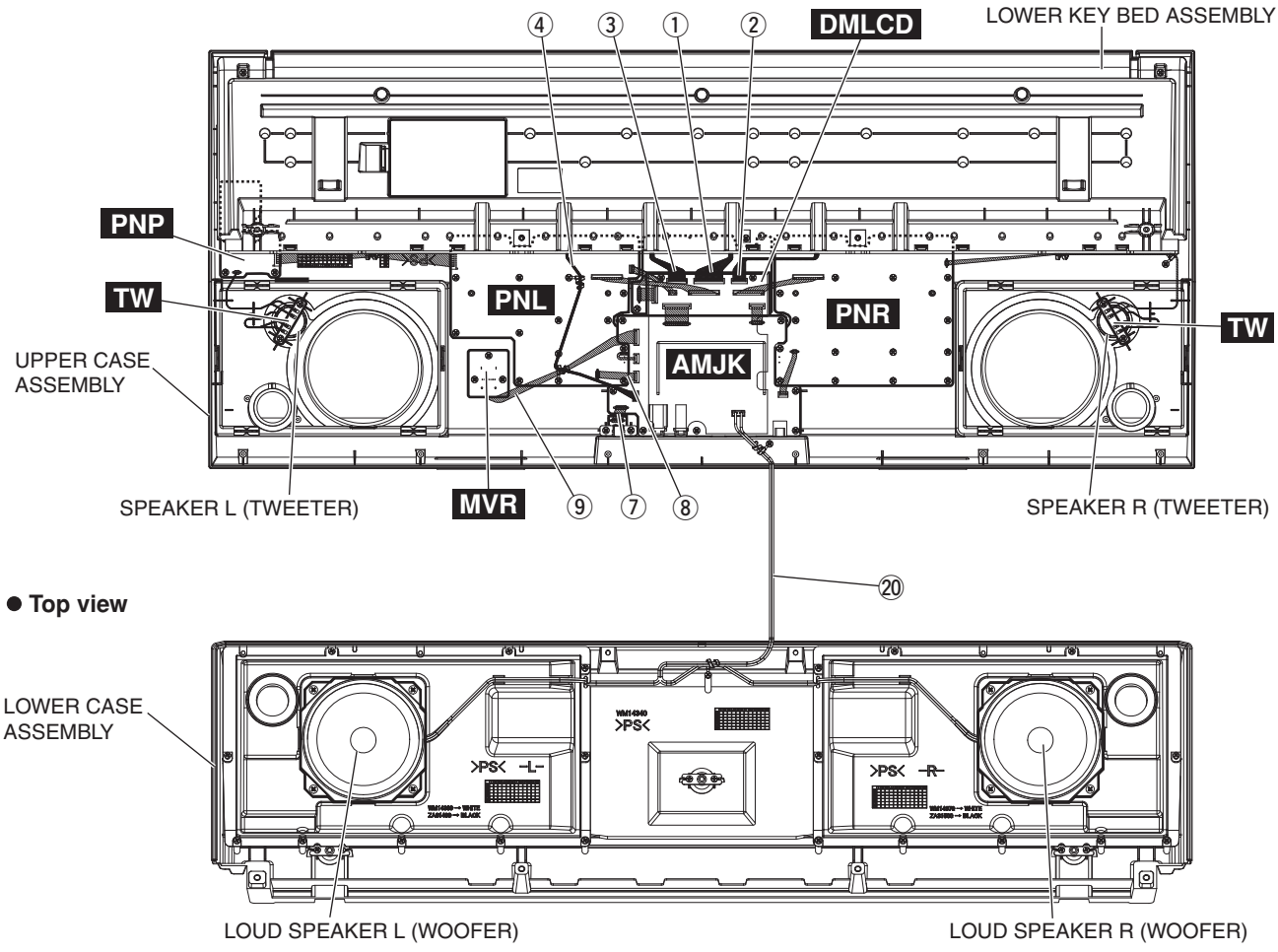

<UPPER CASE ASSEMBLY>

● **Bottom view**

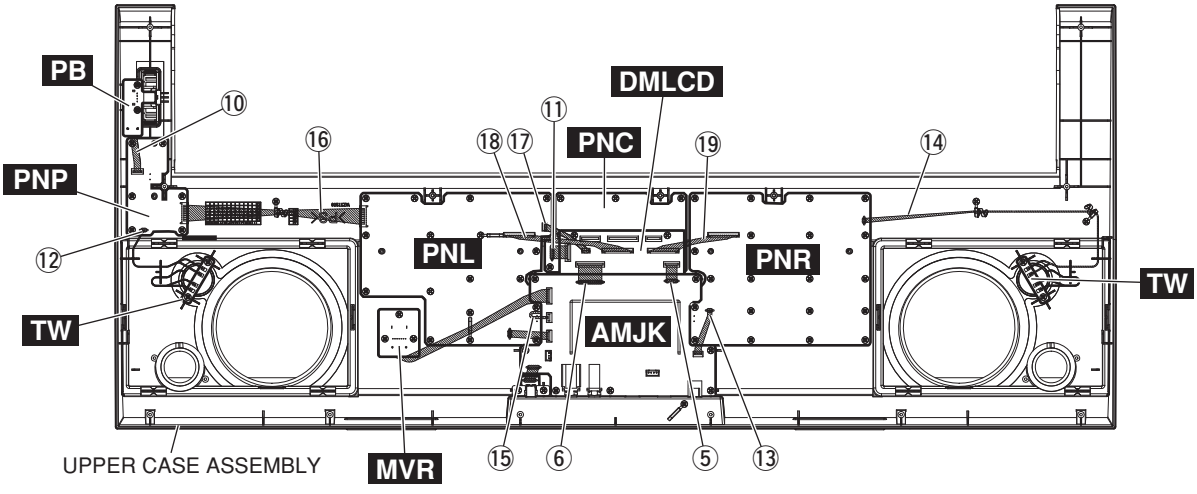

<LOWER KEY BED ASSEMBLY>

● **Top view**

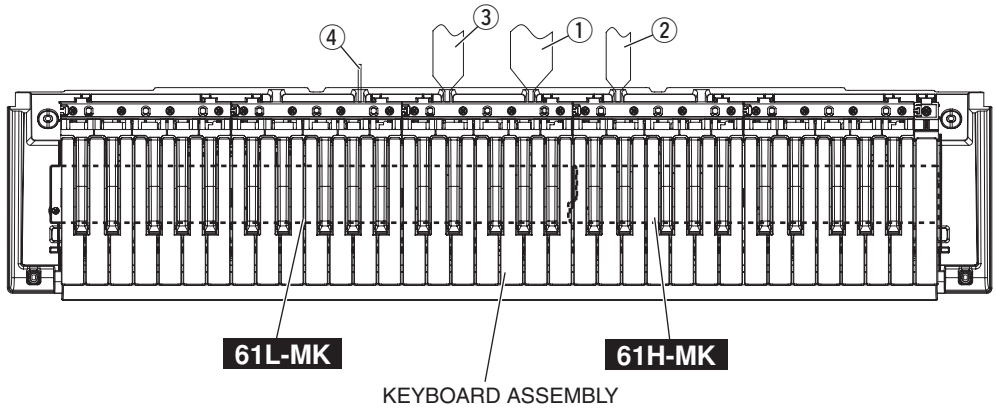

No.	Unit Name	Location	Parts No.	Connector Assembly	Destination						Remarks
①	LOWER KEY BED ASSEMBLY	30	(ZA27390)		61H-MK-CN1	*1	*4	DMLCD-CN501	*1	*4	12P L=250
②		40	(ZA26060)		61H-MK-CN2	*1	*4	DMLCD-CN503	*1	*4	5P L=250
③		50	(ZA26420)		61L-MK-CN5	*1	*4	DMLCD-CN502	*1	*4	7P L=200
④		120	(ZA53710)	BATT	SPRING TERMINAL (B/A)	*2	*6	AMJK-CN101	*1	*9	3P
⑤	AMJK CIRCUIT BOARD	WH001	(ZA17530)		AMJK-CN211	*3	*11	DMLCD-CN505	*1	*4	5P L=50
⑥		WH002	(ZA18490)		AMJK-CN212	*3	*11	DMLCD-CN504	*1	*4	11P L=50
⑦		WH003	(ZA17530)		AMJK-CN204	*3	*11	AMJK-CN103	*3	*11	5P L=50
⑧	PNL CIRCUIT BOARD	WH001	(ZA17230)		PNL-CN802	*3	*11	AMJK-CN205	*1	*4	3P L=100
⑨	MV CIRCUIT BOARD	WH002	(ZA26040)		MV-CN200	*3	*11	AMJK-CN203	*1	*4	5P L=200
⑩	PB CIRCUIT BOARD	WH003	(ZA25600)		PB-CN902	*3	*11	PNP-CN901	*1	*4	3P L=50
⑪	PNC CIRCUIT BOARD	WH004	(ZA17690)		PNC-CN806	*3	*11	DMLCD-CN300	*1	*4	6P L=50
⑫	PNP CIRCUIT BOARD	WH005	(ZA37800)	TWL	PNP-CN905	*3	*11	TW (+/-)	*2	*5	2P L=100
⑬	PNR CIRCUIT BOARD	WH701	(ZA25430)		PNR-CN701	*3	*11	AMJK-CN210	*1	*4	2P L=100
⑭		WH702	(ZA37790)	TWR	PNR-CN702	*3	*11	TW (+/-)	*2	*5	2P L=320
⑮	UPPER CASE ASSEMBLY	350	(WC60540)	BL	Back light assembly	*3	*5	AMJK-CN100	*1	*4	2P L=70
⑯		510	(ZA53660)	PNP	PNL-CN800	*1	*9	PNP-CN900	*1	*9	9P
⑰		520	(ZC35770)	PN	PNL-CN803	*1	*9	DMLCD-CN303	*1	*9	3P
⑱		530	(ZA57650)	PNL	PNL-CN804	*1	*9	DMLCD-CN302	*1	*9	14P
⑲		540	(ZA57650)	PNL	PNR-CN700	*1	*9	DMLCD-CN301	*1	*9	14P
⑳	LOWER CASE ASSEMBLY	30	(ZA35470)	SP	Speaker L (Woofer)	*2	*7	AMJK-CN209	*1	*10	4P
					Speaker R (Woofer)	*2	*8				

* The parts with "( )" in "**Part No.**" are not available as spare parts.
*1: Installation
*2: Manual soldering
*3: Dip soldering
*4: Edge mark is adjusted to Pin 1 mark (△ mark).
*5: Edge mark is adjusted to + mark.
*6: Red wire is connected to (+) terminal. Black wire is connected to (–) terminal.
*7: White wire is connected to (+) terminal. Black wire is connected to (–) terminal.
*8: Red wire is connected to (+) terminal. Black wire is connected to (–) terminal.
*9: Red wire is adjusted to Pin 1 mark (△ mark).
*10: White wire is adjusted to Pin 1 mark (△ mark).
*11: Connected

Caution: Be sure to attach the removed filament tape just as it was before removal.

DISASSEMBLY PROCEDURE

Caution: Be sure to attach the removed filament tape just as it was before removal.

1. Lower Case Assembly

(Time required: About 2 minutes)

1-1. Remove the six (6) screws marked [80A], two (2) screws marked [90] and two (2) screws marked [100A]. The lower case assembly can then be removed. (Fig. 1)

* ***When installing the lower case assembly, first tighten the screw marked [90] and then the remaining screws. (Fig. 1)***

2. Lower Key Bed Assembly

(Time required: About 3 minutes)

2-1. Remove the lower case assembly. (See procedure 1)

2-2. Remove the two (2) screws marked [80B] and screw marked [100B]. The lower key bed assembly can then be removed. (Fig. 2)

● **Bottom view**

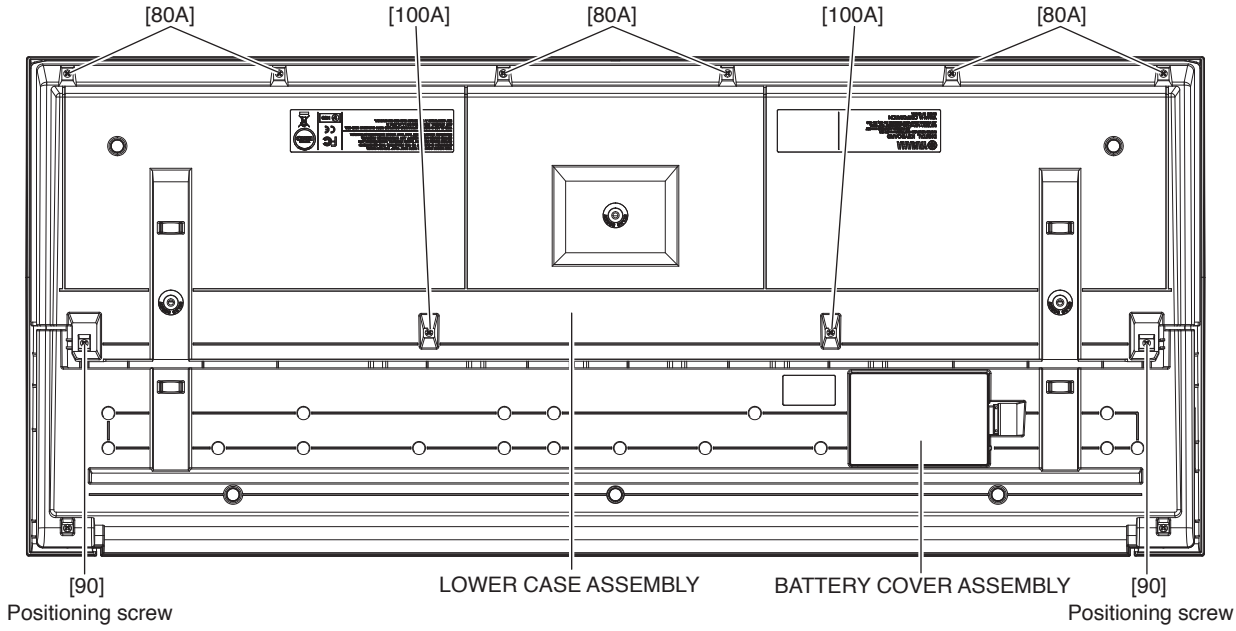

● **Top view**

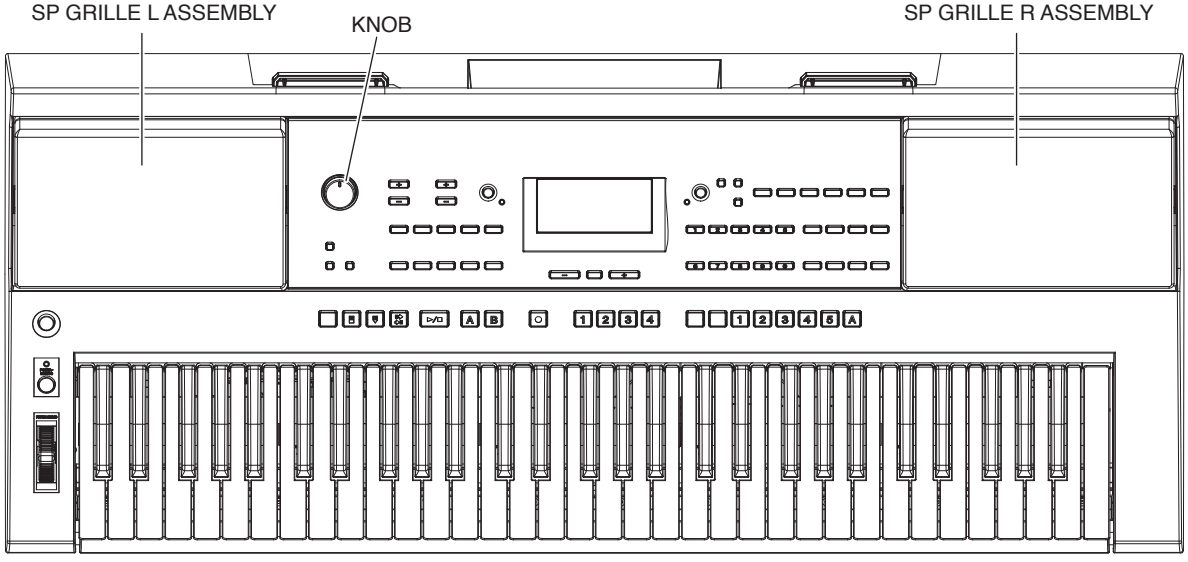

Fig. 1

3. AMJK Circuit Board

(Time required: About 4 minutes)

3-1. Remove the lower case assembly. (See procedure 1)

3-2. Remove the screw marked [400A] on the rear. (Fig. 2)

3-3. Remove the nine (9) screws marked [400B]. The AMJK circuit board can then be removed. (Fig. 2)

4. DMLCD Circuit Board, Back Light Assembly and LCD Display

(Time required: About 6 minutes)

4-1. Remove the lower case assembly. (See procedure 1.)

4-2. Remove the AMJK circuit board. (See procedure 3)

4-3. Remove the thirteen (13) screws marked [400C]. The DMLCD circuit board can then be removed. (Fig. 3)

* ***When installing the DMLCD circuit board, first tighten the screws in the order of 1 through 4 and then the remaining screws. (Fig. 3)***

4-4. Remove the back light assembly, LCD display and rubber connectors from the LCD panel molding. (Fig.4)

* ***Avoid touching the conductive part of the rubber connector as much as possible. Should foreign matter or dirt adhere, remove such contamination using adhesive tape or the like. Do not wipe off using solvents such as benzene or alcohol.***

● **Rear view**

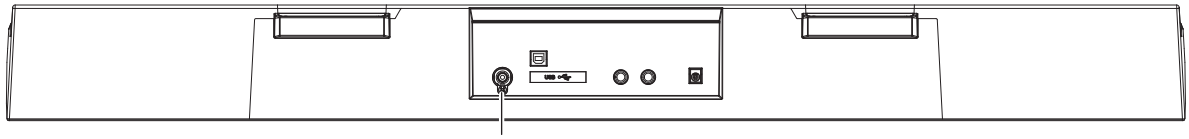

● **Bottom view**

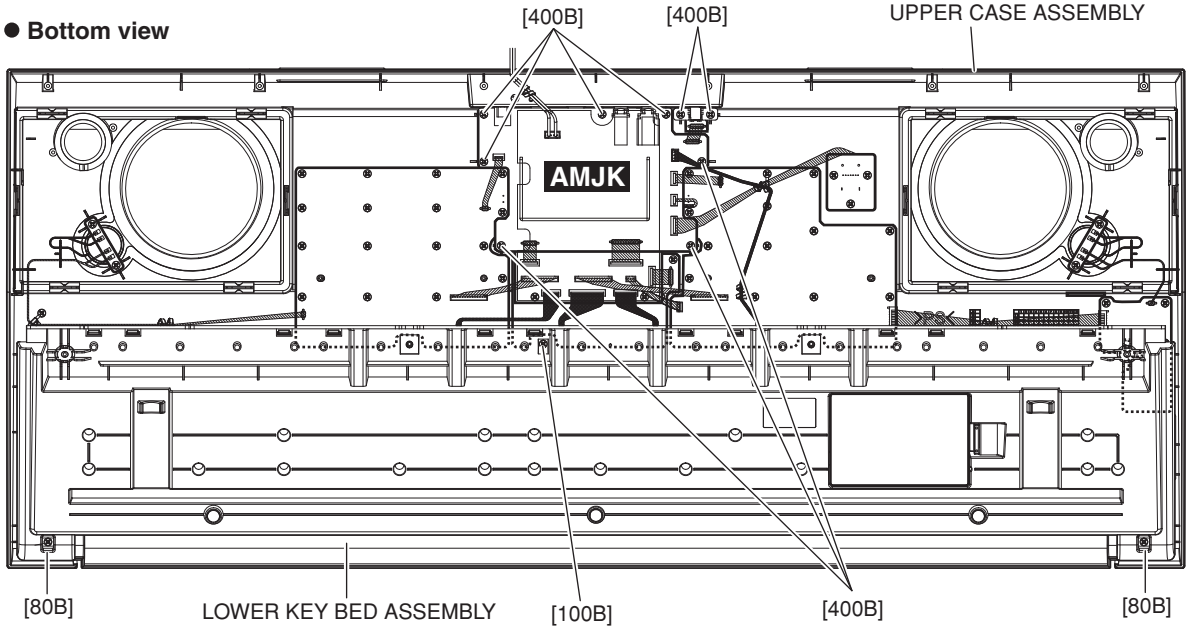

Fig. 2

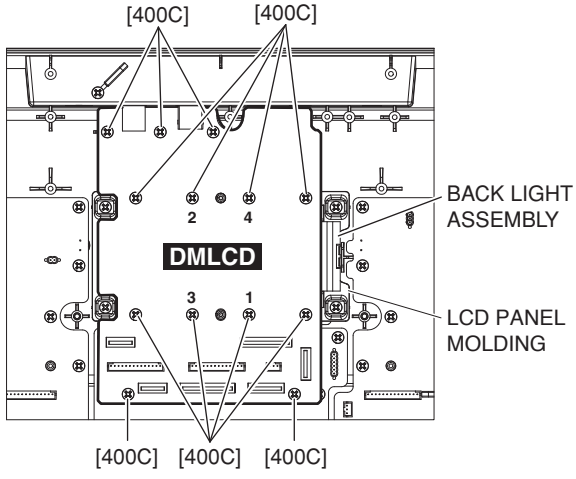

Fig. 3

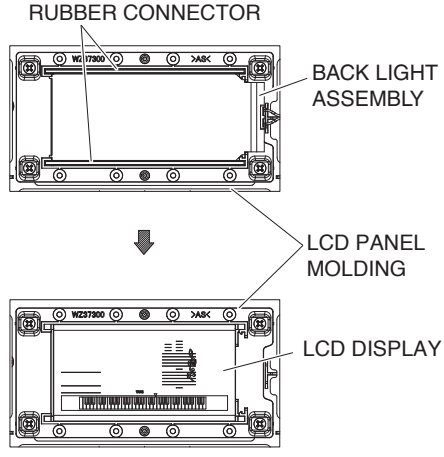

Fig. 4

5. MVR Circuit Board

(Time required: About 2 minutes)

5-1. Pull out the volume knob from the control panel as shown in Fig. 5.

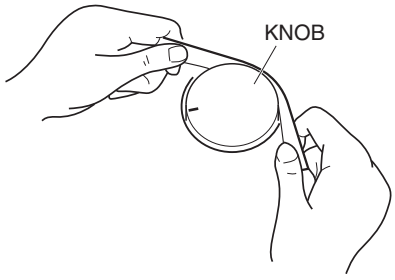

Fig. 5

5-2. Remove the lower case assembly. (See procedure 1)
5-3. Remove the three (3) screws marked [400D]. The MVR circuit board can then be removed. (Fig. 6)

6. TW Circuit Boards and Speakers (Tweeters)

(Time required: About 3 minutes each)

6-1. Remove the lower case assembly. (See procedure 1)
6-2. **TW Circuit Board (L) and Speaker L (Tweeter)**
Remove the connector assembly TW and speaker cable soldered to the TW circuit board (L) and remove the two (2) screws marked [400E]. The TW circuit board (L) and speaker L (tweeter) can then be removed. (Fig. 6)
6-3. **TW Circuit Board (R) and Speaker R (Tweeter)**
Remove the connector assembly TW and speaker cable soldered to the TW circuit board (R) and remove the two (2) screws marked [400F]. The TW circuit board (R) and speaker R (tweeter) can then be removed. (Fig. 6)

7. SP Grille Assembly

(Time required: About 3 minutes each)

7-1. Remove the lower case assembly. (See procedure 1.)
7-2. Set the four (4) projections [A] parallel to the groove in the upper case assembly and remove the SP grille L assembly. (Fig. 1, Fig. 7)

* ***The SP grille R assembly can be removed in the same manner.***

8. PNR Circuit Board

(Time required: About 5 minutes)

8-1. Remove the lower case assembly. (See procedure 1)
8-2. Remove the lower key bed assembly. (See procedure 2)
8-3. Remove the AMJK circuit board. (See procedure 3)
8-4. Remove the twenty (20) screws marked [400G]. The PNR circuit board can then be removed. (Fig. 7)

9. PNL Circuit Board

(Time required: About 5 minutes)

9-1. Remove the lower case assembly. (See procedure 1)
9-2. Remove the lower key bed assembly. (See procedure 2)
9-3. Remove the seventeen (17) screws marked [400H]. The PNL circuit board can then be removed. (Fig. 7)

10. PNC Circuit Board

(Time required: About 8 minutes)

10-1. Remove the lower case assembly. (See procedure 1)
10-2. Remove the lower key bed assembly. (See procedure 2)
10-3. Remove the AMJK circuit board. (See procedure 3)
10-4. Remove the DMLCD circuit board. (See procedure 4)
10-5. Remove the nine (9) screws marked [400I]. The PNC circuit board can then be removed. (Fig. 7)

11. PNP Circuit Board

(Time required: About 3 minutes)

11-1. Remove the lower case assembly. (See procedure 1)
11-2. Remove the lower key bed assembly. (See procedure 2)
11-3. Remove the six (6) screws marked [400J]. The PNP circuit board can then be removed. (Fig. 7)

12. PB Circuit Board and Wheel Assembly

(Time required: About 3 minutes each)

12-1. Remove the lower case assembly. (See procedure 1)
12-2. Remove the lower key bed assembly. (See procedure 2)
12-3. Remove the two (2) screws marked [400K]. The PB circuit board can then be removed with the wheel assembly attached. (Fig. 7)
12-4. Pull out the wheel assembly from the PB circuit board. (Fig. 8)

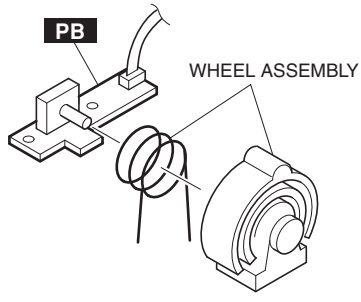

Fig. 8

13. Speakers (Woofers)

(Time required: About 3 minutes)

13-1. Remove the lower case assembly. (See procedure 1)
13-2. Remove the four (4) each screws marked [40] to the right and left. The speakers (woofers) to the right and left can then be removed. (Fig. 9)

<UPPER CASE ASSEMBLY>

● **Bottom view**

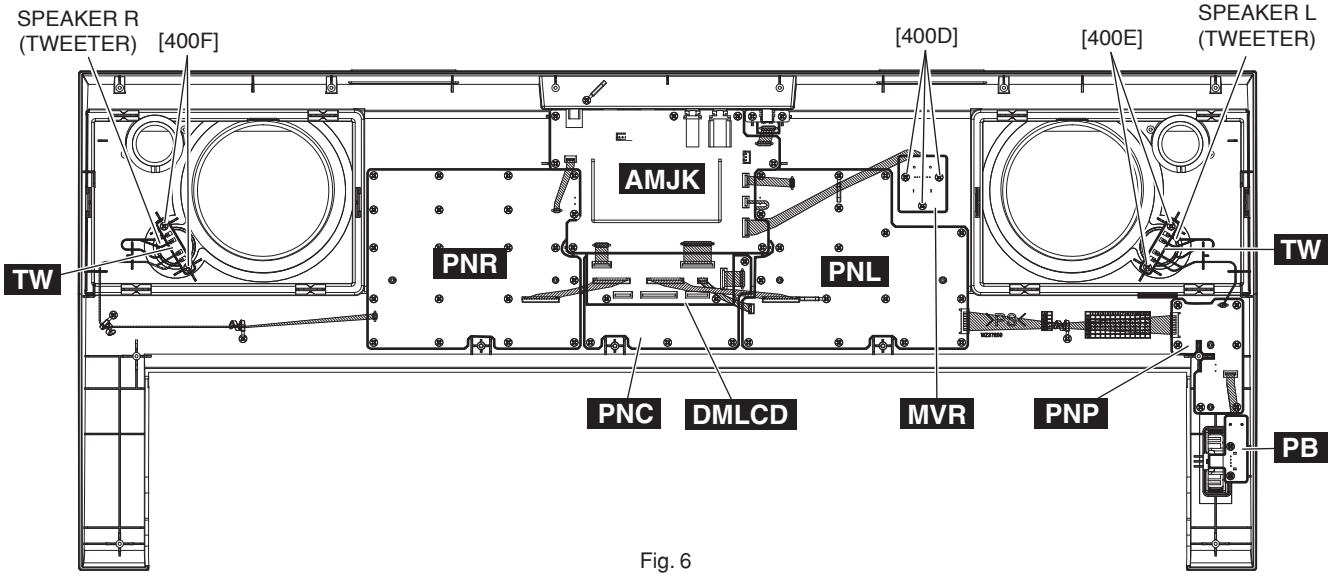

Fig. 6

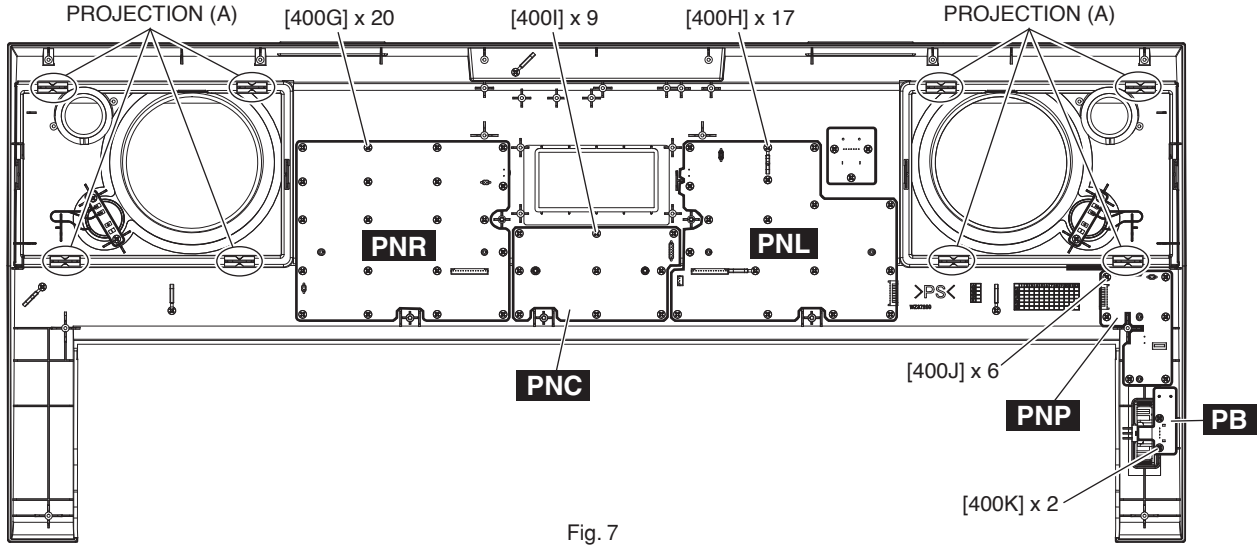

Fig. 7

<LOWER CASE ASSEMBLY>

● **Top view**

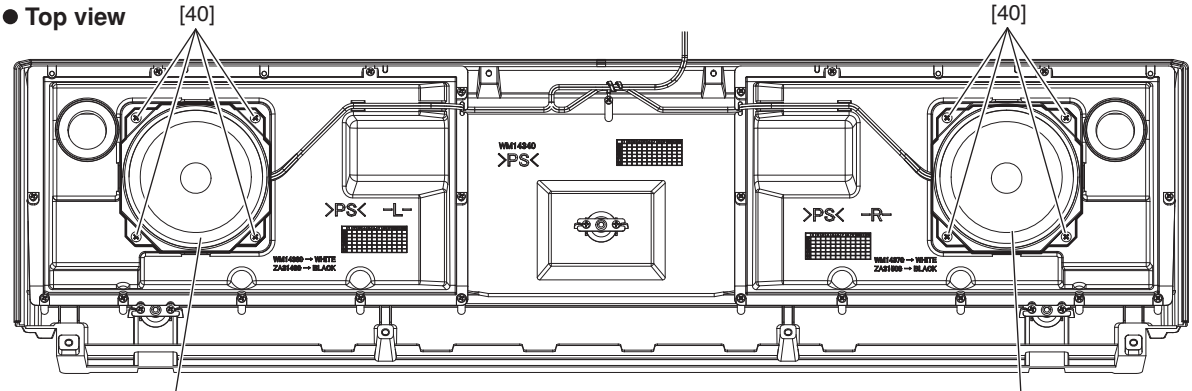

Fig. 9

14. Disassembling Keyboard Assembly

(Time required: About 13 minutes)

14-1. Remove the lower case assembly. (See procedure 1)

14-2. Remove the lower key bed assembly. (See procedure 2)

14-3. **White Keys and Black Keys**

14-3-1. White and black keys for one octave unit are integrated as a set. There are five sets in total. Only the C6 white key, unlike the other keys, is not integrated in a set. (Fig. 10)

14-3-2. To remove a set, remove the four (4) each screws marked [120A]. The white and black keys in the set can then be removed. (Fig. 10)
When removing, unfasten the two (2) hooks at the back of the black keys upward, and lift the white and black keys while pulling them toward you a little. (Photo 1)

14-3-3. To remove the white key C6, remove the screw marked [120B], unhook as described in Procedure 14-3-2, and pull out toward you. (Fig. 10)

* ***When all white and black keys were removed, first attach the white and black keys C3 ~ B3 aligning them with the boss, and then attach the remaining white and black keys. (Fig. 10)***

14-4. **Rubber Contact**

14-4-1. Remove the white and black keys corresponding to the rubber contacts to be removed. (See Fig. 10 and Procedure 14-3.)

14-4-2. Remove the rubber contacts. (Photo 2, Fig. 11)

14-5. **Circuit Board 61L-MK**

14-5-1. Remove the white and black keys from C1 to B3. (See Fig. 10 and Procedure 14-3.)

14-5-2. Remove the twelve (12) screws marked [100C]. The circuit board 61L-MK can then be removed. (Fig. 11)

* ***When installing the circuit board 61L-MK, tighten the screws 1 through 12 in numerical order as shown in the figure "61L-MK" in Fig. 12.***

14-6. **Circuit Board 61H-MK**

14-6-1. Remove the white and black keys from C4 to C6. (See Fig. 10 and Procedure 14-3.)

14-6-2. Remove the eight (8) screws marked [100D]. The circuit board 61H-MK can then be removed. (Fig. 11)

* ***When installing the circuit board 61H-MK, tighten the screws 1 through 8 in numerical order as shown in the figure "61H-MK" in Fig. 12.***

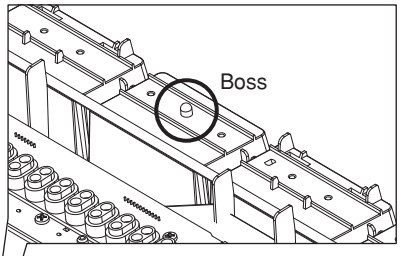

<LOWER KEY BED ASSEMBLY>

● **Top view**

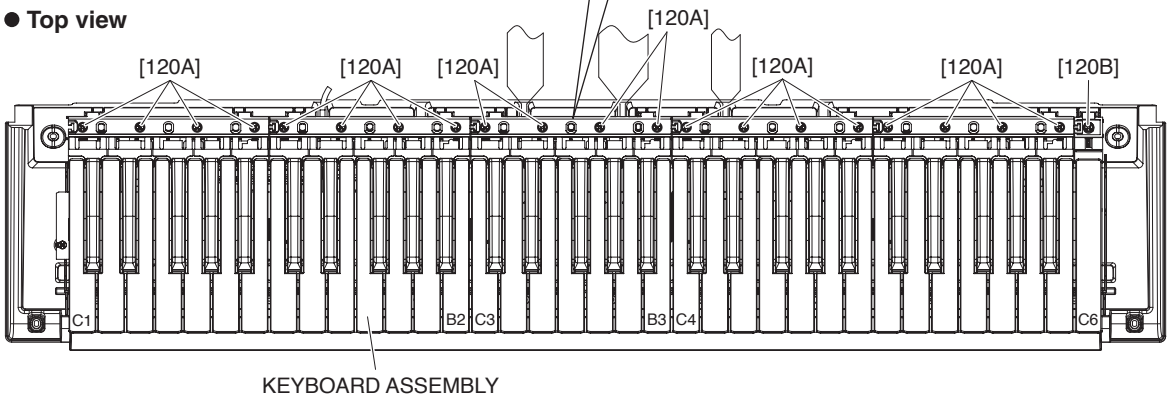

Fig. 10

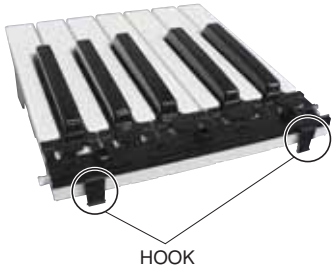

Photo 1



Photo 2

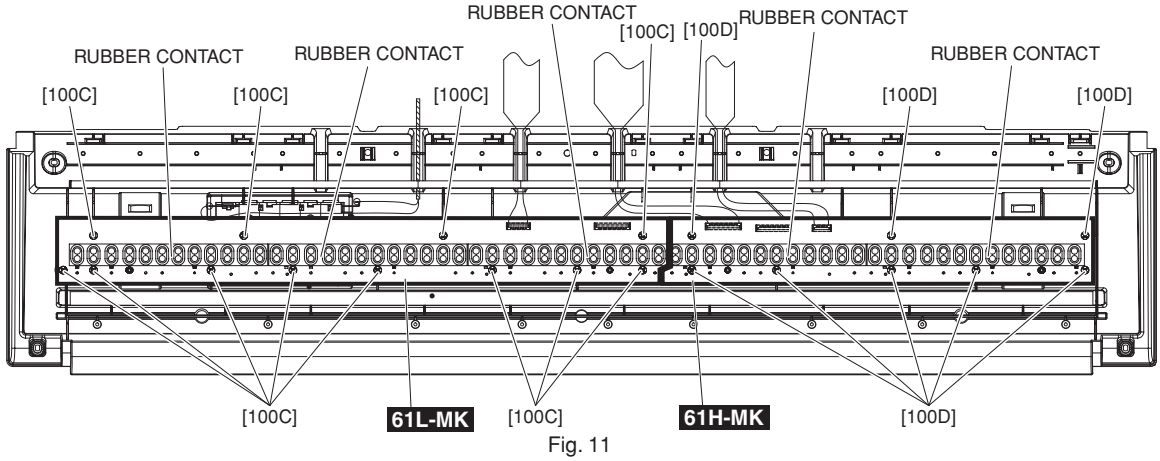

Fig. 11

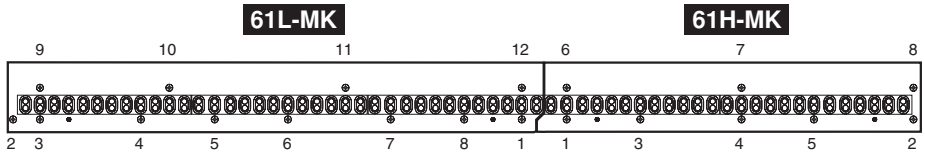

Fig. 12

15. How to Remove Spring Terminals

15-1. **Spring Terminal A and Spring Terminal B (Time required: About 4 minutes each)**

15-1-1. Remove the lower case assembly. (See procedure 1)

15-1-2. Remove the lower key bed assembly. (See procedure 2)

15-1-3. Remove the white and black keys from C1 to B2. (See Fig. 10 and Procedure 14-3.)

15-1-4. Remove the connector assembly BATT soldered to the spring terminal A and spring terminal B. (Photo 3)

15-1-5. Reverse the lower key bed assembly and remove the battery cover assembly. (Fig. 1)

15-1-6. Lift the spring terminal A a little and slide it in the upper right direction to remove it. (Fig. 13)

15-1-7. Remove the hook for the spring terminal B to pull it out from inside. (Fig. 13)

15-2. **Spring Terminal C and Spring Terminal D (Time required: About 1 minute each)**

15-2-1. Remove the battery cover assembly. (See procedure 15-1-5)

15-2-2. Remove the hooks to pull out the spring terminal C and spring terminal D. (Fig. 13, Fig. 14)

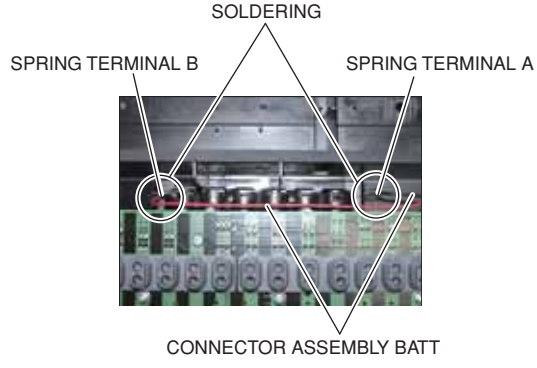

Photo 3

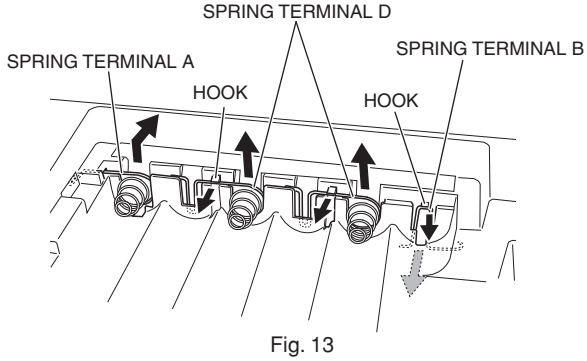

Fig. 13

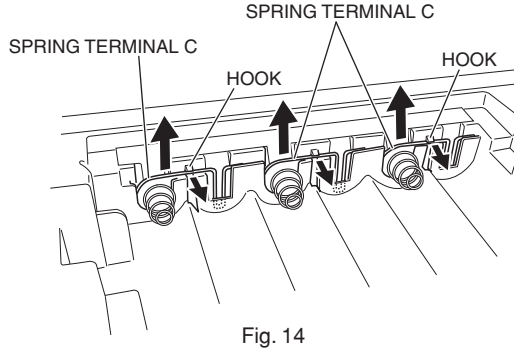

Fig. 14

■ LSI PIN DESCRIPTION

AK4385ET (X6040A01) **DAC** (Digital to Analog Converter).....14
NT3881DFG-01 (X3148A0R) **LCD DRIVER**.....16
ML9040A-B01GAZ03A (XZ987A01) **LCD DRIVER**.....16
SPLC780D1-001A-HQ1 (YC471A00) **LCD DRIVER**.....16
SWL01U (YA876A01) **CPU**.....15

● **AK4385ET** (X6040A01) **DAC** (Digital to Analog Converter)

DMLCD: IC201

PIN NO.	NAME	I/O	FUNCTION	PIN NO.	NAME	I/O	FUNCTION
1	MCLK	I	Master Clock	9	AOUTR-	O	Rch Analog out(-)
2	BICK	I	Audio Serial Data Clock	10	AOUTR+	O	Rch Analog out(+)
3	SDTI	I	Audio Serial Date Input	11	AOUTL-	O	Lch Analog out(-)
4	LRCK	I	L/R Clock	12	AOUTL+	O	Lch Analog out(+)
5	PDN	I	Power Down mode	13	Vss	-	Ground
6	CSN	I	Chip Select	14	VDD	-	Power Supply
7	CCLK	I	Control Data Input	15	DZFR	O	Rch Data Zero Input Detect
8	CDTI	I	Control Data Input	16	DZFL	O	Lch Data Zero Input Detect

● SWL01U (YA876A01) CPU

DMLCD: IC001

PIN NO.	NAME	I/O	FUNCTION	PIN NO.	NAME	I/O	FUNCTION
1	NC	-	Connection to the GND	89	NC	-	Connection to the GND
2	NC	-		90	NC	-	
3	EA3/PD3/KYN24	I	ON/OFF signal from the keyboard	91	MD03	I/O	External memory data bus
4	EA2/PD2/KYN23	I		92	MD11	I/O	
5	EA1/PD1/KYN22	I		93	MD04	I/O	
6	EA0/PD0/KYN21	I		94	MD12	I/O	
7	ED0/PC0/KYN11	I/O	Key selection signal to the keyboard	95	MD05	I/O	
8	ED1/PC1/KYN12	I/O		96	MD13	I/O	
9	ED2/PC2/KYN13	I/O		97	MD06	I/O	
10	ED3/PC3/KYN14	I/O		98	MD14	I/O	
11	ED4/PC4/KYN15	I/O		99	MD07	I/O	
12	ED5/PC5/KYN16	I/O		100	MD15	I/O	
13	ED6/PC6/KYB05	I/O		101	VSS	-	Digital Core ground
14	ED7/PC7/KYB06	I/O		102	CS50RDN/PE4/RCLK	O	Priority of setup) PE4 > RCLK(SDRAM) > CS50RDN
15	PROTN	I	Determines if the product is a prototype	103	MA17	O	External memory address
16	BISTMD	I	Memory BIST mode (1: BIST mode)	104	MA23	O	
17	BISTCLK	I	Memory BIST clock	105	MA16	O	
18	PLLBPN	I	PLL bypass mode (0: PLL bypass)	106	MA15	O	
19	TESTN	-	Test mode	107	MA14	O	
20	VSS	-	Digital Core ground	108	MA13	O	
21	XI	I	Crystal oscillator input (33.8688 MHz)	109	MA12	O	
22	XO	O	Crystal oscillator output	110	MA11	O	
23	VDD	-	Digital Core power supply	111	VDD	-	Digital Core power supply
24	VSS	-	Digital Core ground	112	IOVDD	I/O	I/O power supply
25	IOVDD	I/O	I/O power supply	113	MA10	O	External memory address
26	TRSTN	I	JTAG I/F reset	114	MA09	O	
27	TMS	I	JTAG I/F mode	115	MA20	O	
28	TCK	I	JTAG I/F clock	116	MA21/PF1	O	
29	TDI	I	JTAG I/F input	117	MA22/PF2	O	
30	TDO	I	JTAG I/F output	118	MA19	O	
31	VDD	-	Digital Core power supply	119	MA18	O	
32	PLLVDD	-	Digital PLL power supply (common with Core power supply inside)	120	MA08	O	
33	VSS	-	Digital Core ground	121	MA07	O	
34	PLLVSS	-	Digital PLL ground (common with Core ground inside)	122	MA06	O	
35	WCLK/SYO	O	Word clock (1 Fs = 44.1 kHz)	123	MA05	O	
36	PFO	O	Output-only port	124	MA04	O	
37	SDO1	O	Audio output data (with EQ & compressor)	125	MA03	O	
38	SDO0	O	(SWL01 equivalent output data)/Selection signal to the keyboard	126	MA02	O	
39	BCLK	O	Bit clock (64Fs)	127	MA00	O	
40	SYSCLK/PG3	O	System clock (256Fs/384Fs/768Fs)	128	CS1N/PG1	O	Chip select for area 3
41	SDI/PH3	I	Serial audio input data	129	VSS	-	Digital Core ground
42	VSS	-	Digital Core ground	130	ICN	I	Reset
43	IRQON/PHO	I	Interrupt input	131	VSS	-	Digital Core ground
44	NC	-	Connection to the GND	132	NC	-	Connection to the GND
45	NC	-		133	NC	-	
46	NC	-		134	NC	-	
47	NC	-		135	PA0	I/O	Universal I/O port
48	TXD0/PG4	O	Serial port I/F	136	PA1	I/O	
49	RXD0/PH4	I	Serial port I/F	137	PA2	I/O	
50	TXD1/PG2	O	Serial port I/F	138	PA3	I/O	
51	RXD1/PH1	I	Serial port I/F	139	PA4	I/O	
52	SCLK1/PH2	I	Serial port I/F	140	PA5	I/O	
53	UCTL	I	Fixed L when USB is in use/Fixed H when not in use	141	PA6	I/O	
54	VDD	-	Digital Core power supply	142	PA7	I/O	
55	VSS	-	Digital Core ground	143	PB0	I/O	
56	AVDD	-	Analog power supply	144	PB1	I/O	
57	AVREF	I	ADC reference	145	PB2	I/O	
58	AN0	I	ADC input	146	PB3	I/O	
59	AN1	I		147	PB4	I/O	
60	AN2	I		148	PB5	I/O	
61	AN3	I		149	PB6	I/O	
62	AGNDREF	I	ADC ground reference	150	PB7	I/O	
63	AVSS	-	Analog ground	151	IOVDD	I/O	I/O power supply
64	USBVDD	-	USB I/O power supply 1.8v (Pullup when not in use)	152	VSS	-	Digital Core ground
65	FUNC_DM	I/O	USB data -	153	VDD	-	Digital Core power supply
66	FUNC_DP	I/O	USB data +	154	WRN/PF5/WEN	O	Priority of setup) PF5 > WEN(SDRAM) > WRN
67	USBVSS	-	USB I/O ground	155	UBN/PF7/UDQM	O	Priority of setup) PF7 > UDQM(SDRAM) > UBN
68	USBIOVDD	-	USB I/O power supply 3.3v (Pullup when not in use)	156	LBN/PF6/LDQM	O	Priority of setup) PF6 > LDQM(SDRAM) > LBN
69	VSS	-	Digital Core ground	157	CS2N/PE0/KYB07	O	Chip select for area 4
70	VDD	-	Digital Core power supply	158	CS3N/PE1/KYB08	O	Chip select for area 5
71	XI_UCLK	I	Crystal oscillator input (48 MHz)	159	CS4N/PE2	O	Chip select for area 6
72	XO_UCLK	O	Crystal oscillator output	160	CS5N/PE3/KYB09	O	Chip select for area 7
73	VSS	-	Digital Core ground	161	CS51WRN/PE5/KYB12	O	For luminescent keyboard
74	IOVDD	I/O	I/O power supply	162	CS52WRN/PE6/KYB13	O	
75	VBUS	I	USB Vbus	163	CS53WRN/PE7	O	
76	PULLUPE	O	USB Pullup enable	164	PF3	O	Output-only port
77	CS0N/PG0	O	Chip select for area 2	165	PJ5	O	Used as key selection signal to the keyboard
78	RDN/PF4	O	External memory read signal	166	PJ4/KYB11	O	
79	MA01	O	External memory address	167	PJ3/KYB01	O	
80	MD00	I/O	External memory data bus	168	PJ2/KYB04	O	
81	MD08	I/O		169	PJ1/KYB03	O	
82	MD01	I/O		170	PJ0/KYB02	O	
83	MD09	I/O		171	VSS	-	Digital Core ground
84	MD02	I/O		172	ECSN	I	Chip select input from external CPU
85	MD10	I/O		173	EWRN/PD5/KYN26	I	Write enable input from external CPU
86	NC	-	Connection to the GND	174	ERDN/PD4/KYN25	I	Read enable input from external CPU
87	NC	-		175	NC	-	Connection to the GND
88	NC	-		176	NC	-	

- **NT3881DFG-01** (X3148A0R) **LCD DRIVER**
- **ML9040A-B01GAZ03A** (XZ987A01) **LCD DRIVER**
- **SPLC780D1-001A-HQ1** (YC471A00) **LCD DRIVER**

DMLCD: IC601

PIN NO.	NAME	I/O	FUNCTION	PIN NO.	NAME	I/O	FUNCTION
1	S22	O	Segment signal output for LCD driving	41	DB2	I/O	Data interface
2	S21	O		42	DB3	I/O	
3	S20	O		43	DB4	I/O	
4	S19	O		44	DB5	I/O	
5	S18	O		45	DB6	I/O	
6	S17	O		46	DB7	I/O	
7	S16	O		47	C1	O	Common signal output for LCD driving
8	S15	O		48	C2	O	
9	S14	O		49	C3	O	
10	S13	O		50	C4	O	
11	S12	O		51	C5	O	
12	S11	O		52	C6	O	
13	S10	O		53	C7	O	
14	S9	O		54	C8	O	
15	S8	O		55	C9	O	
16	S7	O		56	C10	O	
17	S6	O		57	C11	O	
18	S5	O		58	C12	O	
19	S4	O		59	C13	O	
20	S3	O		60	C14	O	
21	S2	O		61	C15	O	
22	S1	O		62	C16	O	
23	Vss		Ground	63	S40	O	Segment signal output for LCD driving
24	OSC1	I	Oscillator	64	S39	O	
25	OSC2	O	Oscillator	65	S38	O	
26	V1		Power supply	66	S37	O	
27	V2			67	S36	O	
28	V3			68	S35	O	
29	V4			69	S34	O	
30	V5			70	S33	O	
31	CLK1	O	Data latch clock	71	S32	O	
32	CLK2	O	Data shift clock	72	S31	O	
33	Vdd		Power supply (+5 V)	73	S30	O	
34	M	O	Altamated signal for LCD driver outout	74	S29	O	
35	D	O	Display data interface	75	S28	O	
36	RS	I		76	S27	O	
37	R/W	I	Read/write	77	S26	O	
38	E	I	Enable	78	S25	O	
39	DB0	I/O	Data interface	79	S24	O	
40	DB1	I/O	Data interface	80	S23	O	

■ CIRCUIT BOARDS

AMJK Circuit Board (YD800D0)..... 20
DMLCD Circuit Board (YD796C0, YE803A0) 18/19
MV Circuit Board (YD799C0)..... 17
PB Circuit Board (YD799C0)..... 17
PNC Circuit Board (YD799C0) 22
PNL Circuit Board (YD799C0)..... 22
PNP Circuit Board (YD799C0)..... 17
PNR Circuit Board (YD925C0) 21
TW Circuit Board (YD799C0) 17
61H-MK Circuit Board (X2335D0) 23
61L-MK Circuit Board (X2336C0)..... 23

Note: See parts list for details of circuit board component parts.
The DMLCD circuit boards "YD796C0" and "YE803A0" are shared parts.

● PNP Circuit Board

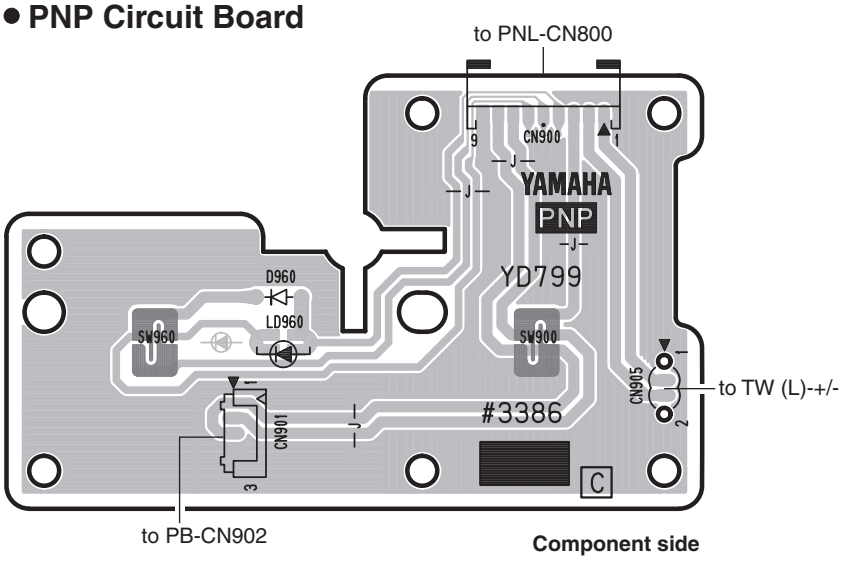

● TW Circuit Board

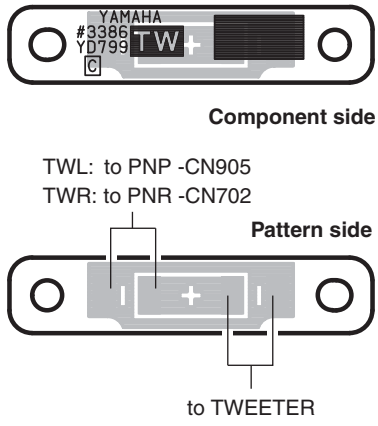

● MV Circuit Board

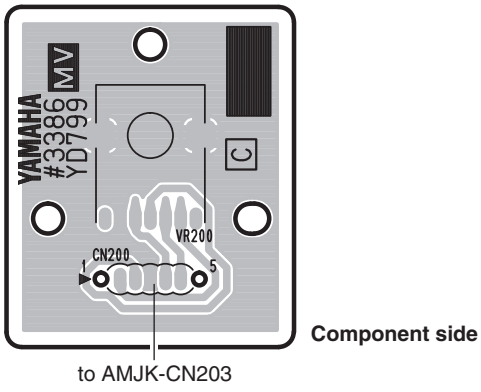

● PB Circuit Board

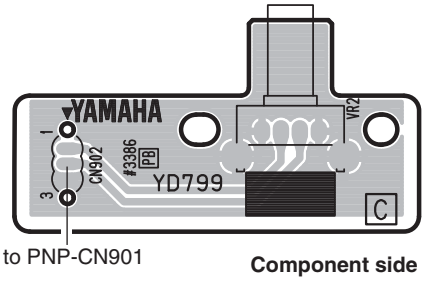

● DMLCD Circuit Board

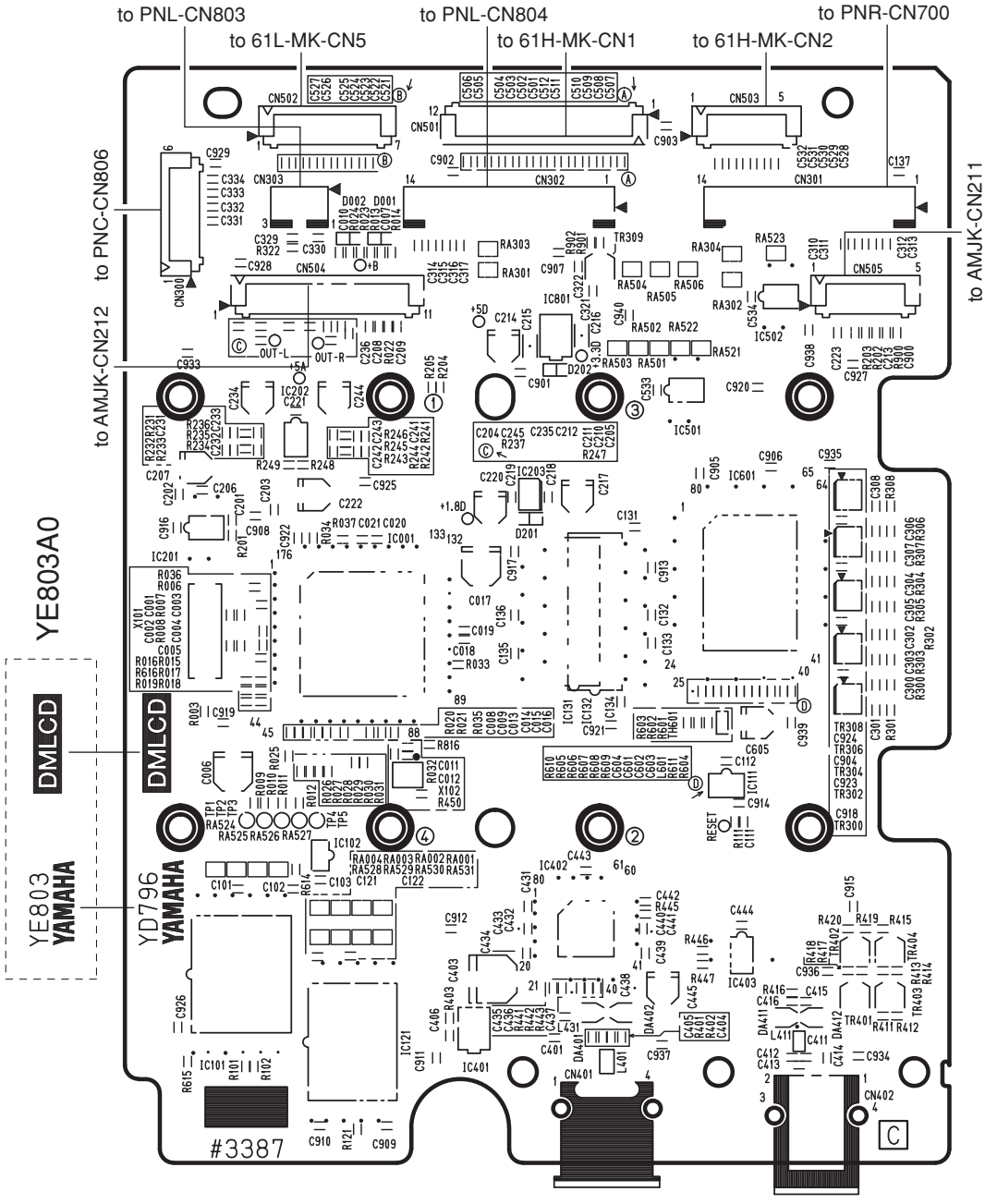

● DMLCD Circuit Board

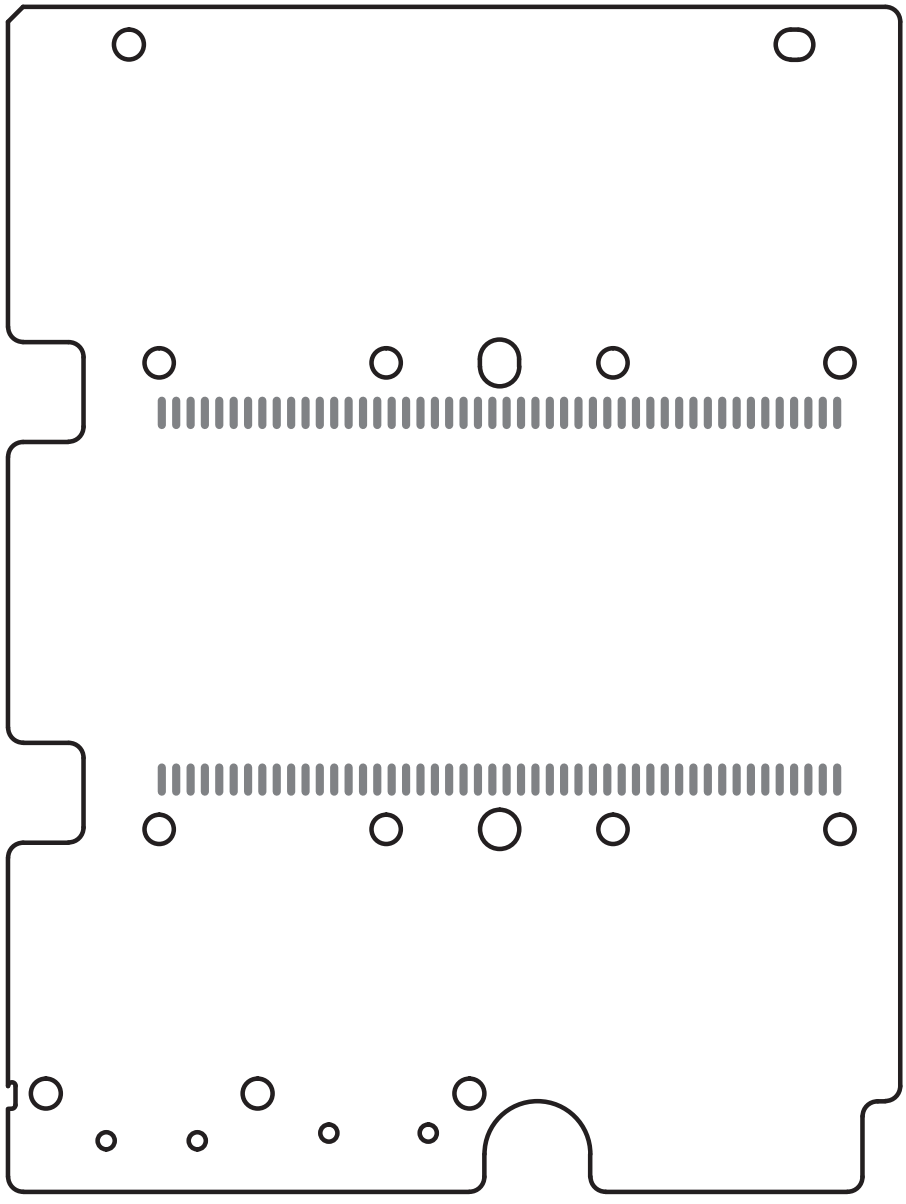

Pattern side

● AMJK Circuit Board

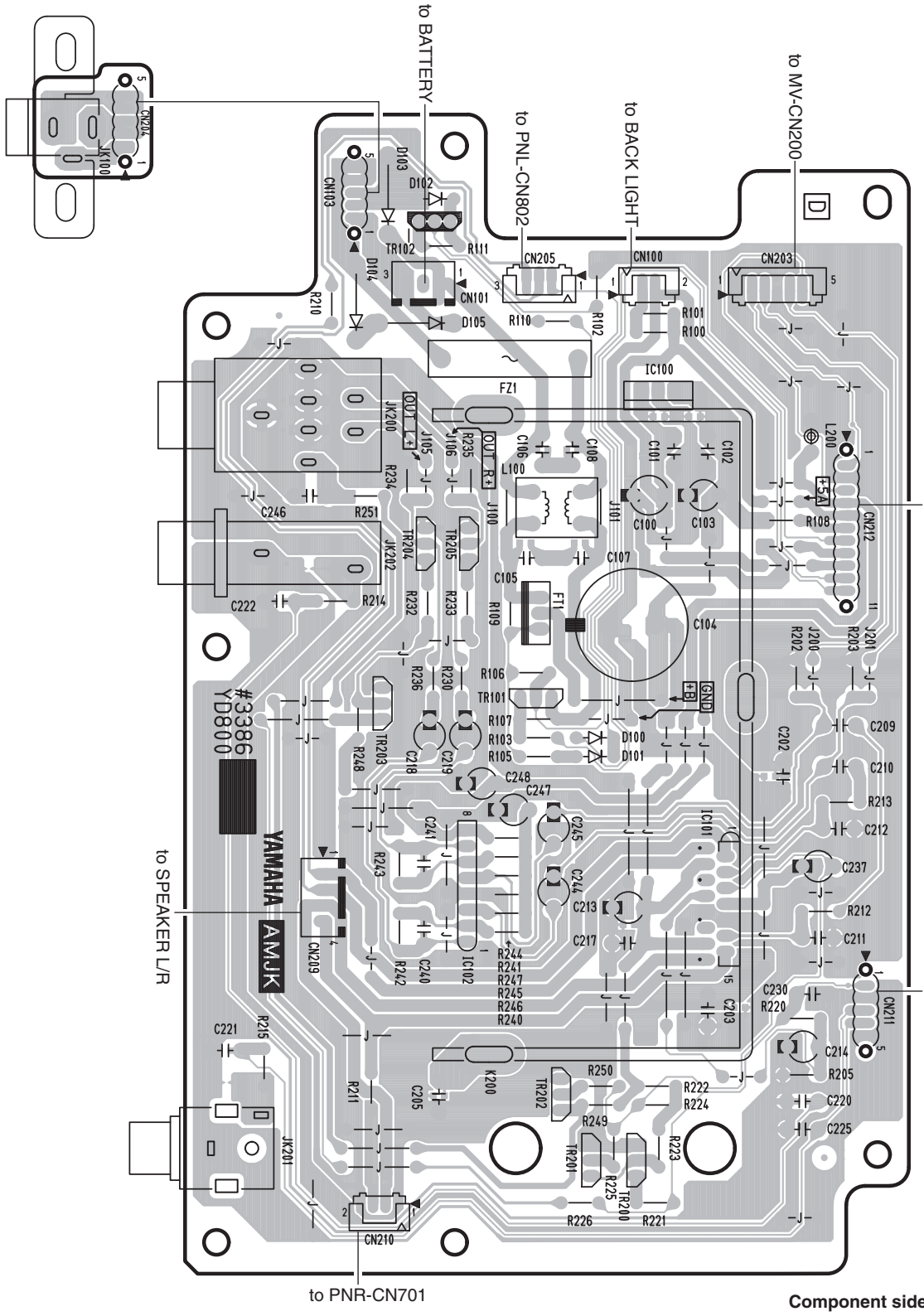

Component side

● PNR Circuit Board

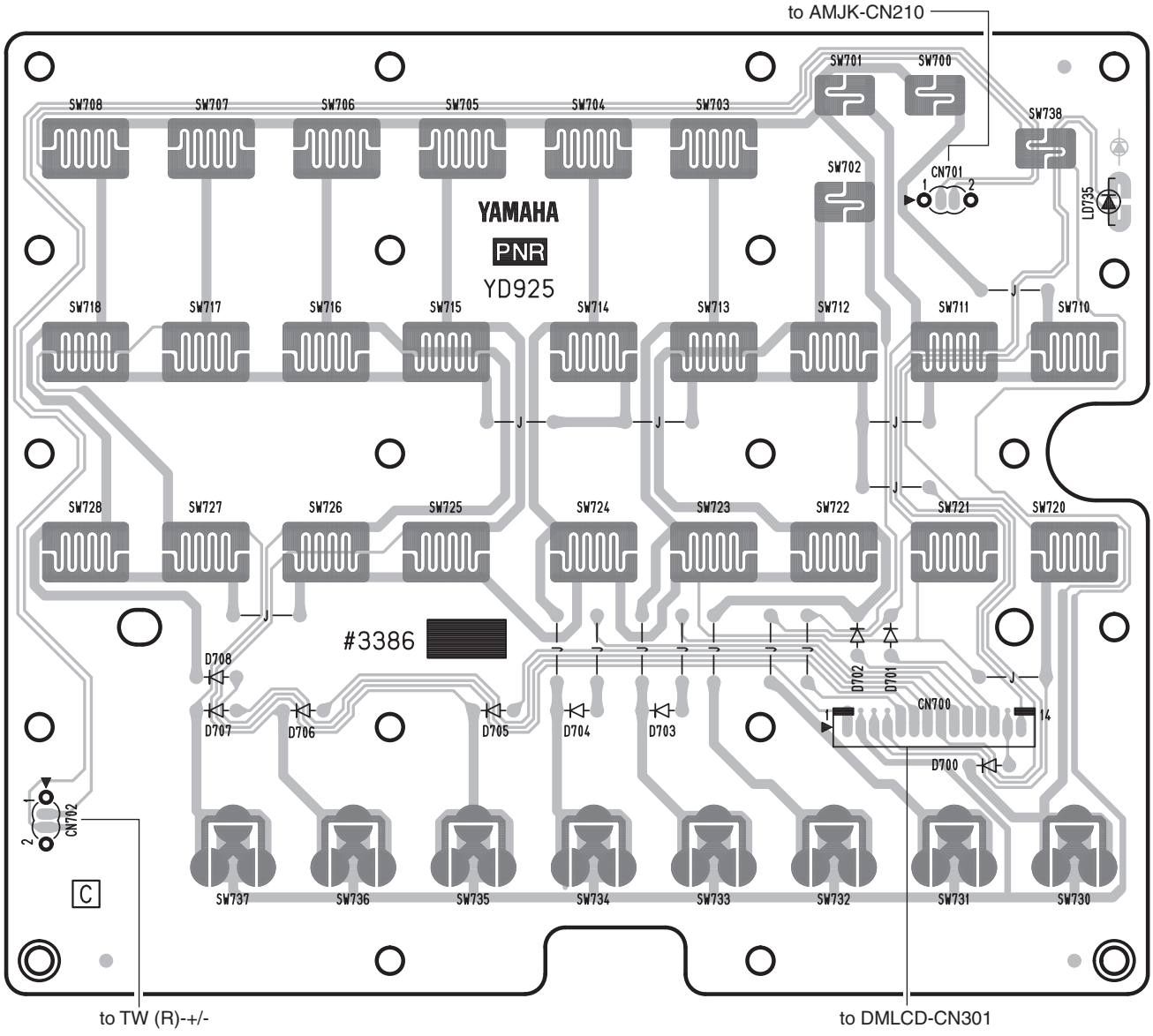

Component side

Scale: 90/100

● PNL Circuit Board

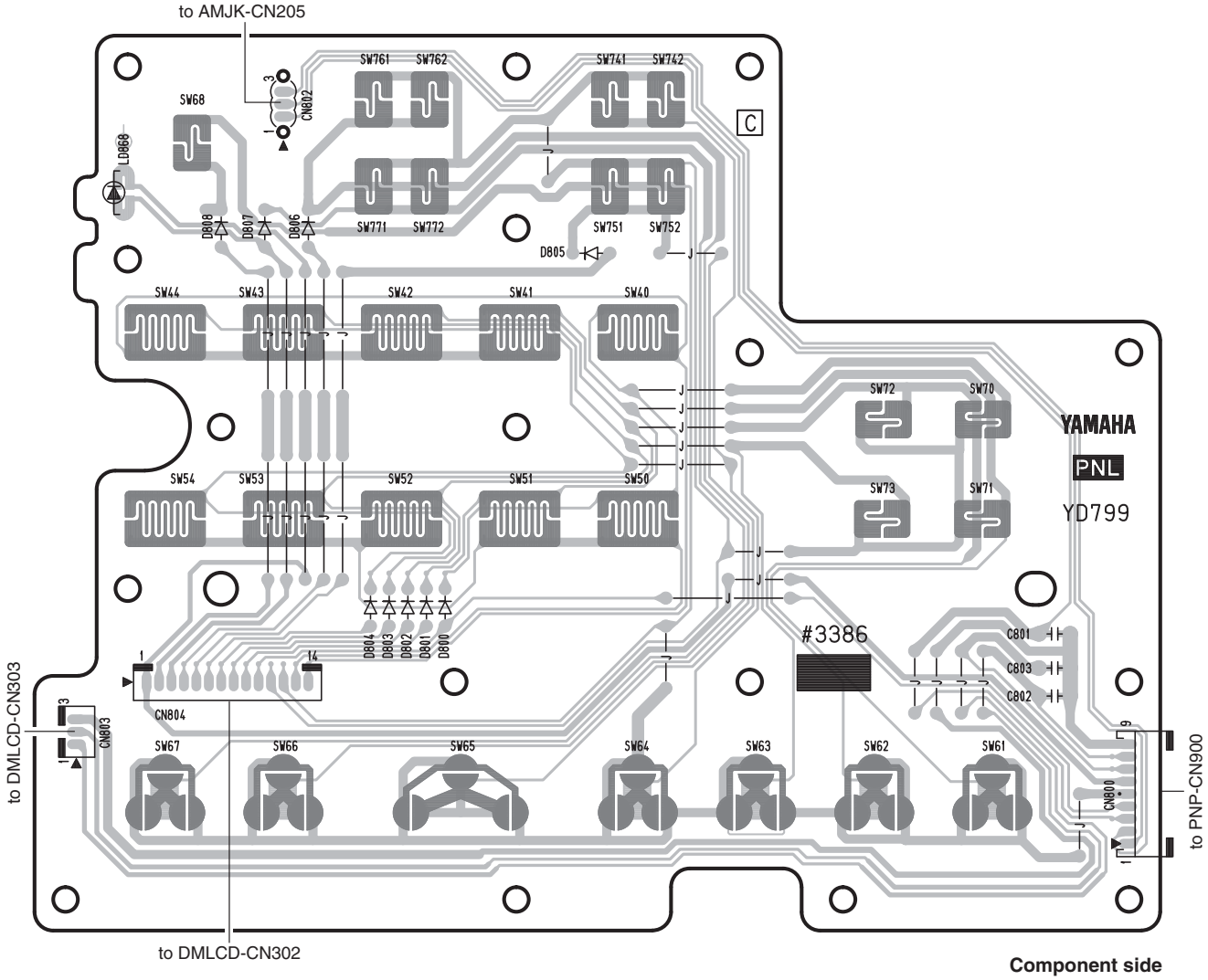

Component side

● PNC Circuit Board

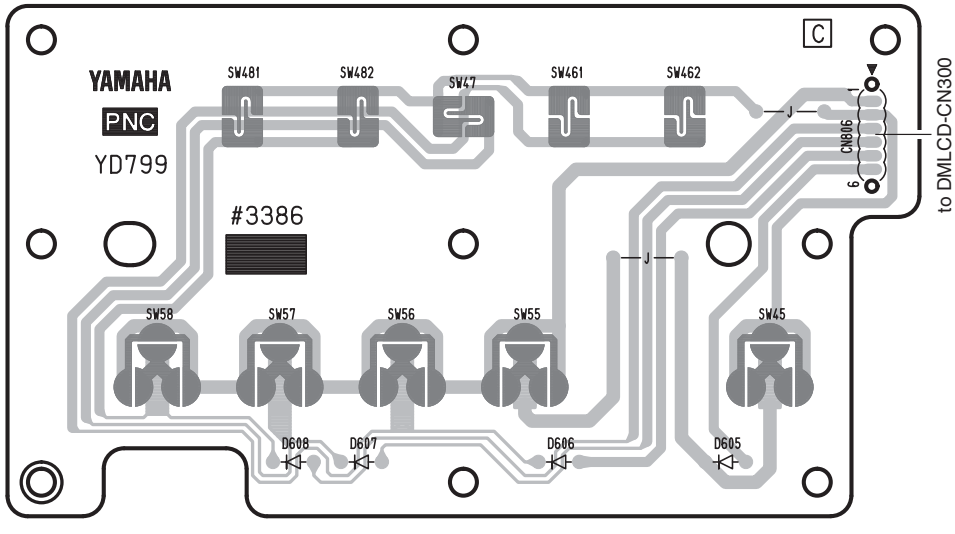

Component side

Scale: 70/100

● 61H-MK Circuit Board

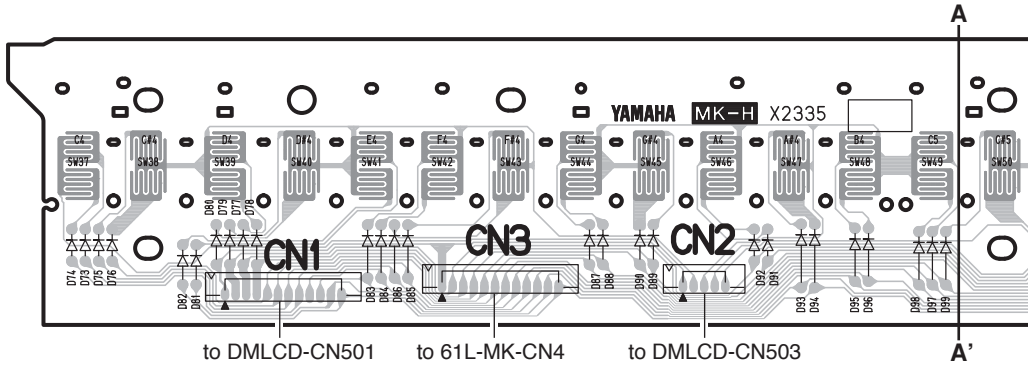

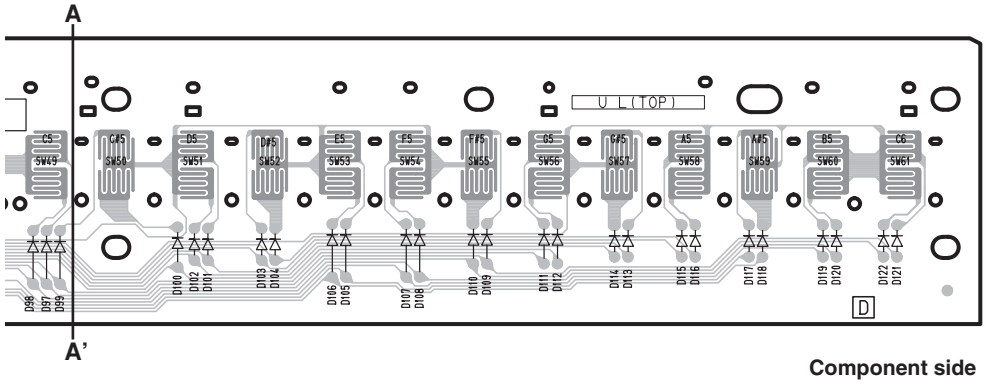

Component side

● 61L-MK Circuit Board

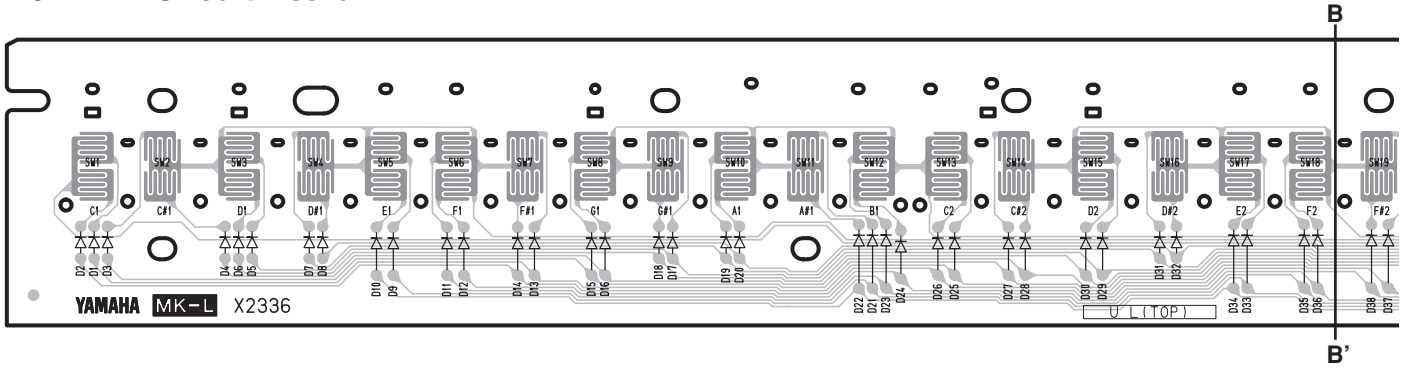

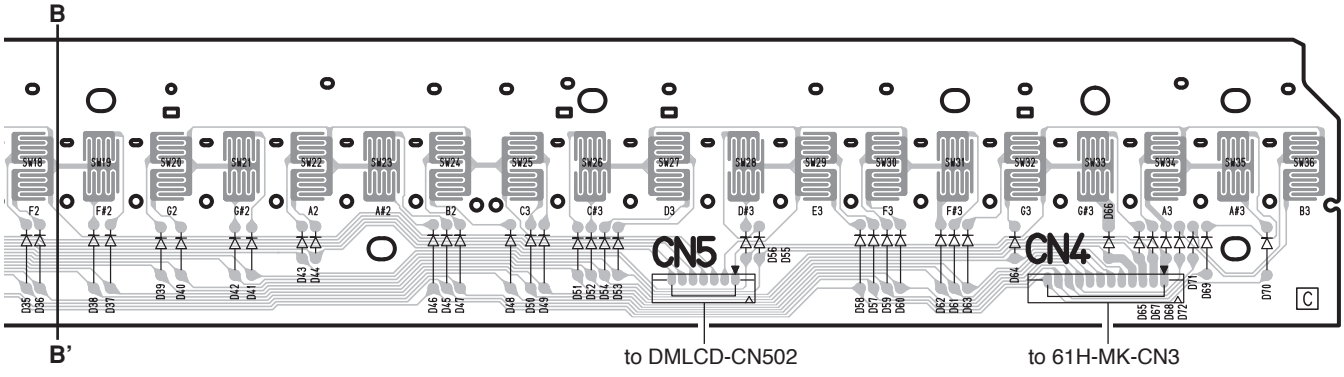

Component side

61H-MK:2NAKB-V869540
61L-MK: 2NAKB-V869520

TEST PROGRAM

*** If the test number 59 "Factory Set" is executed, the data already set will be lost.**

1 Preparations

1) Use an AC adaptor PA-150A.
2) Measuring device: Frequency counter, which can detect thousandth value or more, Level meter (with JIS-C filter), Oscilloscope
   Note: Use a stereo plug and connect a load resistor of 33 ohms to the [耳机 / 输出] jack for measurement unless otherwise specified. Input impedance of the measuring device should be 1 M ohms or more.
3) Jig: Foot switch (FC-4 or FC-5), USB cable, EXP Pedal (EP-1), Batteries
4) Controller settings
   MASTER VOLUME : MAX
   PEDAL : OFF
   Others : Initial setting when the power is turned on

2 Starting up the Test Program

While holding down the keys [C#2], [F2] and [G#2] simultaneously, press the [⏻] (待机 / 开) switch.

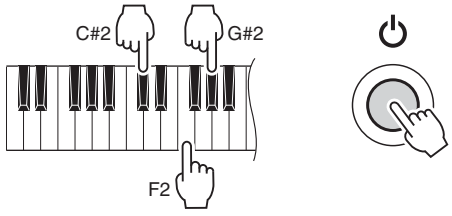

3 Test procedure

1) When the test program is started, "**TEST**" will be displayed on the LCD.
2) Press the [+/ 是] or [-/ 否] button to select a test program item.
3) Press the [起动 / 停止] button to execute the test.
4) See the "Switch test item list" on page 27 for the correlation between button names in the manual and the button names on the panel.

If the result is OK or test item is completed, press the [起动 / 停止] button again to return to the item selection display.
Press the [+/ 是] or [-/ 否] button to select the next test item.
A cursor ("_") is shown below the first character of the item for which the test results are OK.

If the result is NG, press the lowest key (white key C1) to return to the item selection display.

4 Test Program List

(dBu=dBm)

TEST No	LCD display	Test descriptions, judging conditions, etc.
1	**Version** **001**	Displays version of the ROM. Using the voice switches, each data version can be displayed as follows. [二胡] Main Program Version Main: ✻✻✻ [琵琶] Boot Program Version Boot: ✻✻✻ [扬琴] Style Data Version Style: ✻✻✻ [笛子] Song Data Version Song: ✻✻✻ [唢呐] Voice Paramater Version Param: ✻✻✻ [拉弦组合奏] Wave Data Version Wave: ✻✻✻  ✻✻✻ : Version The "Main" version is used as the version of ROM for management. You have only to check the "Main" version as the "Main" version will change if the version of Boot/ Style/Song/Param/Wave is changed.
2	**Mem 1 All** **002**	Checks the ROM, RAM and FROM connected to the CPU bus. Make sure that "**Mem 1 OK**" is displayed on the LCD. When the result is OK, test No. 003, 004 and 005 can be omitted.
3	**Rom Chk1** **003**	Checks the ROM connected to the CPU bus. Make sure that "**Rom OK**" is displayed on the LCD.

TEST No	LCD display	Test descriptions, judging conditions, etc.
4	**Ram Chk1** **004**	Checks the RAM connected to the CPU bus. Make sure that "**Ram OK**" is displayed on the LCD.
5	**FRomChk1** **005**	Checks the FROM connected to the CPU bus. Make sure that "**FRom OK**" is displayed on the LCD.
8	**TG1 Chk** **008**	Plays each key automatically in the order of scale (auto-scaling). (32 notes from C2 to G4 will be played.) Make sure that there is no abnormal sounds or noise. When the auto-scaling is finished, "**TG1 End**" will be shown. Press a key to play a sound. (Single note, the key pressed first will be played)
9	**Pit Chk** **009**	Checks pitch accuracy. Connect the frequency counter to the [耳机 / 输出] jack. (Either L or R) Make sure that the correct signal is output. (441.0 Hz ± 0.2 Hz) **Amount of volume decay** Connect the level meter (with JIS-C filter) to the L/R of the [耳机 / 输出] jack. (33 ohms load) Turn the [主音量] to the minimum and measre the amount of volume decay. · PHONES L, R: -70 dBu or less
11	**Output R** **011**	Connect the level meter (with JIS-C filter) to the L/R of the [耳机 / 输出] jack. (33 ohms load) Set the [主音量] to the maximum level and check the output level. · PHONES L: -55.0 dBu or less · PHONES R: -8.4 dBu ± 2 dB
12	**Output L** **012**	Connect the level meter (with JIS-C filter) to the L/R of the [耳机 / 输出] jack. (33 ohms load) Set the [主音量] to the maximum level and check the output level. · PHONES L: -8.4 dBu ± 2 dB · PHONES R: -55.0 dBu or less
22	**SW Chk** **022**	Checks the switches and LEDs on the panel. Press the switches as shown in the LCD. When a switch is pressed, a sound is played at the prescribed pitch. (Refer to the Switch Test Item List on page 27.) When a switch with LED is turned on, the LED will light up. Make sure that "**SW OK**" is displayed on the LCD when all the switches are pressed as indicated. To cancel the operation halfway, press the lowest key (white key C1) to return to the item selection display.
23	**A. LED On** **023**	Make sure that all the LEDs on the panel are turned on.
29	**LCD On** **029**	Make sure that all the dots on the LCD are turned on.
30	**LCD Off** **030**	Make sure that all the dots on the LCD are turned off.
34	**PD1 Chk** **034**	Before starting the test procedure, connect the foot switch (FC-4 or FC-5) to the [延音踏板] jack. 1. Start testing by pressing the [起动 / 停止] button, and the C3 sound should be produced. 2. Depress the foot switch (ON), and the C4 sound should be produced. 3. Release the foot switch (OFF), and the sound should be stopped with "**PD1 OK**" displayed on the LCD.
36	**PD3 Chk** **036**	Before starting the test procedure, connect the expression pedal (EP-1) to the [表现踏板] jack. 1. Start testing by pressing the [起动 / 停止] button, and the C3 sound should be produced. 2. Depress the expression pedal (ON), and the C4 sound should be produced. 3. Release the expression pedal (OFF), and the sound should be stopped with "**PD3 OK**" displayed on the LCD.
38	**PB Chk** **038**	C3 is played when the [PITCH BEND] wheel is turned toward you to the minimum position (DW), and C4 is played when the wheel is turned away from you to the maximum position (UP). Make sure that "**PB OK**" is displayed on the LCD. PB C: "064" PB DW: "000" PB UP: "127"
40	**MIDI Chk** **040**	Connect a PC which has installed the driver and main unit [USB] terminal with a USB cable. Set the through mode on PC and execute the test. Confirm that the C4 note is output and "**MIDI OK**" is displayed on the LCD.

TEST No	LCD display	Test descriptions, judging conditions, etc.
43	**Adpt Chk** **043**	Checks the function to detect connection/disconnection of the AC adaptor. 1. **"Adpt Out"** is displayed on the LCD when the test is executed. 2. **"Adpt In"** is displayed on the LCD when the AC adaptor is removed from the [直流输入] jack. 3. Insert the AC adaptor into the [直流输入] jack. 4. Make sure that the C4 sound is produced and **"Adpt OK"** is displayed on the LCD.
54	**Rom Chk2** **054**	Checks the ROM connected to the CPU bus. Make sure that "**Rom OK**" is displayed on the LCD. It will take about 1 minutes for the check.
55	**Ram Chk2** **055**	Checks the RAM connected to the CPU bus. Make sure that "**Ram OK**" is displayed on the LCD.
56	**FRomChk2** **056**	Checks the FROM connected to the CPU bus. Make sure that "**FRom OK**" is displayed on the LCD. It will take about 2 minutes for the check.
59	**Factory** **059**	Initializes the entire backup area to reset to the factory default. "**Fact**" is displayed on the LCD during the test. "**Fact End**" is displayed on the LCD when the test is finished.
60	**TestExit** **060**	This will leave the test program and change to the play mode.

● Other Tests

Noise Level Check

Connect the level meter (with JIS-C filter) to the L/R of the [耳机 / 输出] jack. (33 ohms load)
Set the [主音量] to the maximum level and check the noise level.
· PHONES L, R: –70 dBu or less

Popping Noise Check

Connect the oscilloscope to the L/R of the [耳机 / 输出] jack and turn on and then off the [待机 / 开] switch. Make sure that popping noise level is 1.0 Vp-p or less, and that no abnormal sound or popping noise is output from the speakers.

Switch test item list

Turn	SW Name	LCD Display	Note Number
1	示范乐曲	Demo	C2
2	力度	Touch	C#2
3	混响	Reverb	D2
4	伴奏音量 [+]	A-VOL UP	D#2
5	伴奏音量 [-]	A-VOL DW	E2
6	速度 [+]	Temp UP	F2
7	速度 [-]	Temp DW	F#2
8	伴奏型	Style AB	G2
9	8 拍子	8BEAT	G#2
10	叙事曲	BALLAD	A2
11	摇滚乐	ROCK	A#2
12	迪斯科	DISCO	B2
13	中国流行	GD WUSHI	C3
14	伦巴	RUMBA	C#3
15	波沙诺瓦	BOSSANVA	D3
16	进行曲	MARCH	D#3
17	华尔兹	WALTZ	E3
18	节拍器	METRO.	F3
19	[-/ 否]	-/NO	F#3
20	功能	Function	G3
21	[+/ 是]	+/YES	G#3
22	音色	Voice AB	A3
23	延音	Sustain	A#3
24	双音色	Dual	B3
25	音色分割	Split	C4
26	二胡	ERHU	C#4
27	琵琶	PIPA	D4
28	扬琴	YANGQIN	D#4
29	笛子	DIZI	E4
30	唢呐	SUONA	F4
31	拉弦组合奏	ENSEMBLE	F#4
32	钢琴	PIANO	G4
33	古钢琴	HARPSI.	G#4
34	风琴	C.ORGAN	A4
35	手风琴	ACCORD	A#4

Turn	SW Name	LCD Display	Note Number
36	振琴	VIBES	B4
37	弦乐 1	STRINGS1	C5
38	小提琴	VIOLIN	C#5
39	长笛	FLUTE	D5
40	单簧管	CLARINET	D#5
41	双簧管	OBOE	E5
42	小号	TRAMPET	F5
43	圆号	HORN	F#5
44	铜管合奏	BRASS	G5
45	竖琴	HARP	G#5
46	合成主奏	SYN LEAD	A5
47	原声吉他	ACO.GTR	A#5
48	贝司	BASS	B5
49	声音效果 /XG	SE/XG	C6
50	和弦伴奏开 / 关	ACMP	C#6
51	同步停止	S.Stop	D6
52	同步起动	S.Start	D#6
53	前奏 / 尾声	Intro	E6
54	起动 / 停止	Str/Stp	F6
55	主奏 / 自动插入 A	Main A	F#6
56	主奏 / 自动插入 B	Main B	G6
57	存储	Memory	G#6
58	注册存储 [1]	Regist 1	A6
59	注册存储 [2]	Regist 2	A#6
60	注册存储 [3]	Regist 3	B6
61	注册存储 [4]	Regist 4	C7
62	乐曲编号	Song No.	C#7
63	录音	REC	D7
64	乐曲 [1]	Song 1	D#7
65	乐曲 [2]	Song 2	E7
66	乐曲 [3]	Song 3	F7
67	乐曲 [4]	Song 4	F#7
68	乐曲 [5]	Song 5	G7
69	乐曲 [A]	Song A	G#7
70	PORTAMENTO	Portamen	A7

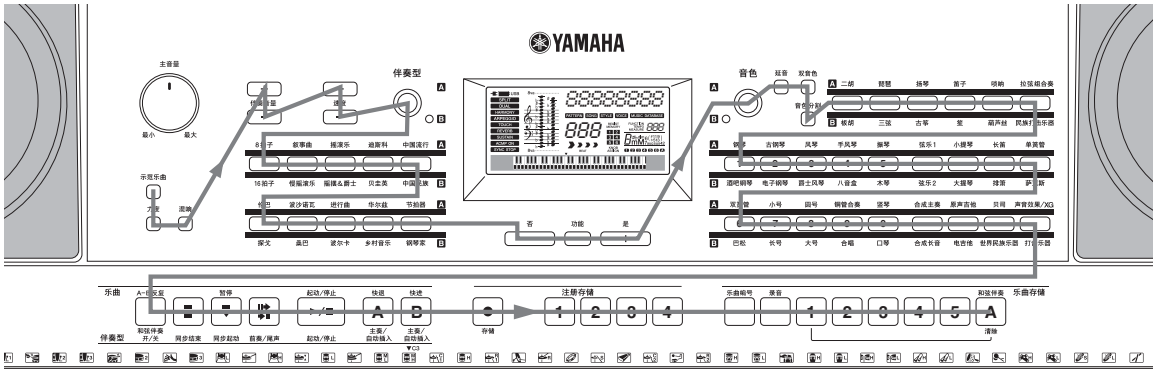

USER DATA BACKUP

To backup user data to external devices, use the “Musicsoft Downloader”.
You can use the Musicsoft Downloader to transfer “Backup Data”, “External Song”, “External Style” including the five User Songs stored on the instrument, to a computer.

List of data that can be backed up

- Registration Memory
- Tuning
- Pitch Bend Range
- Touch Response On/Off
- Touch Response Sensitivity
- Split Point
- Style Volume
- Song Volume
- Portamento Time
- Freeze Mode On/Off
- Battery Type
- User Songs (Songs recorded on this instrument)

PREPARATION

PC (Personal Computer)
AB type USB cable of less than about 3 meters
MIDI-USB Driver *1
Musicsoft Downloader (MSD) *1

*1: Obtain these programs Yamaha official website.
URL>> http://www.downlead.yamaha.com/

Install these software in PC beforehand.

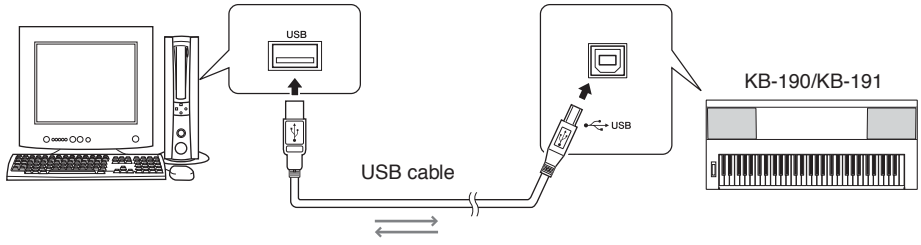

BACKUP PROCEDURE

1. Turn off the power of the instrument.
2. End all the application software.
3. Exit from any power-saving mode of the computer (such as suspended, sleep, standby).
4. Connect the instrument to the PC with a USB cable.
5. Turn on the power of the instrument.
6. Click the Control Panel on PC.
7. Click "USB-MIDI Driver" on the Control Panel to open the dialog box.
8. Remove the check from the check box next the word "Thru ON/OFF" in the dialog box.
9. Start up the Musicsoft Downloader.
10. If you click "Electronic Musical Instruments" in the Musicsoft Downloader display, and then "System Drive", a file named "KB-190.BUP" will appear in the lower right corner of the Musicsoft Downloader display.
    This is the backup file. For details about how to transmit backup file using the Musicsoft Downloader application, refer to the Online help in the application.

NOTE: Preset Song data cannot be transmitted from the instrument.
While the computer is connected to the instrument, you should wait for six seconds or more between these operations: (1) when turning the power of the instrument off then on again, or (2) when alternately connecting/disconnecting the USB cable.

- The backup data, including the five User Songs is transmitted/received as a single file. As a result, all backup data will be overwritten every time you transmit or receive. Keep this in mind when transferring data.
- We recommend that you use a power adaptor rather than batteries when transferring data. The data can be corrupted if the batteries fail during the transfer.
- Do not rename the backup file on the computer. If you do so, it will not be recognized when transferred to the instrument.

INITIALIZATION

This function erases backed up settings and backed up Song data independently and restores the initial default settings.

Initializing the Settings

All backup data (not including the Song files transferred from a computer) can be initialized to the factory default settings. To do this, simultaneously hold down the highest key and turn on the power. “BackUp CLr” appears briefly on the display.

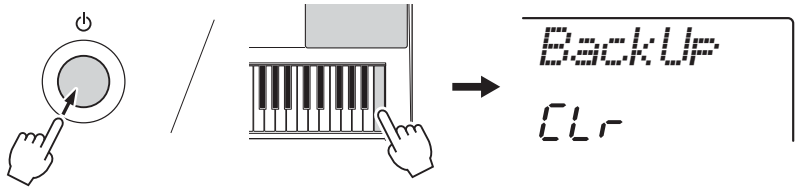

Deleting the Song Files Transferred from a Computer

To do this, simultaneously hold down the highest white key with the three highest black keys, and turn on the power. “Flash CLr” appears briefly on the display.

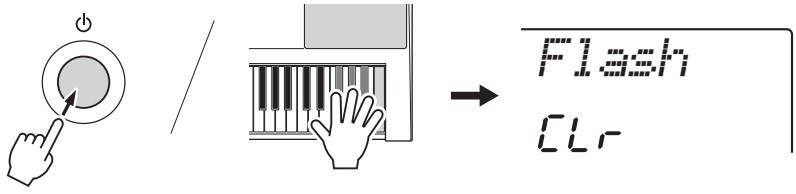

NOTE

• When you execute the Flash Clear operation, data you have purchased will also be cleared. Be sure to save data you want to keep to a computer.

SYSTEM BOOTING FLOWCHART

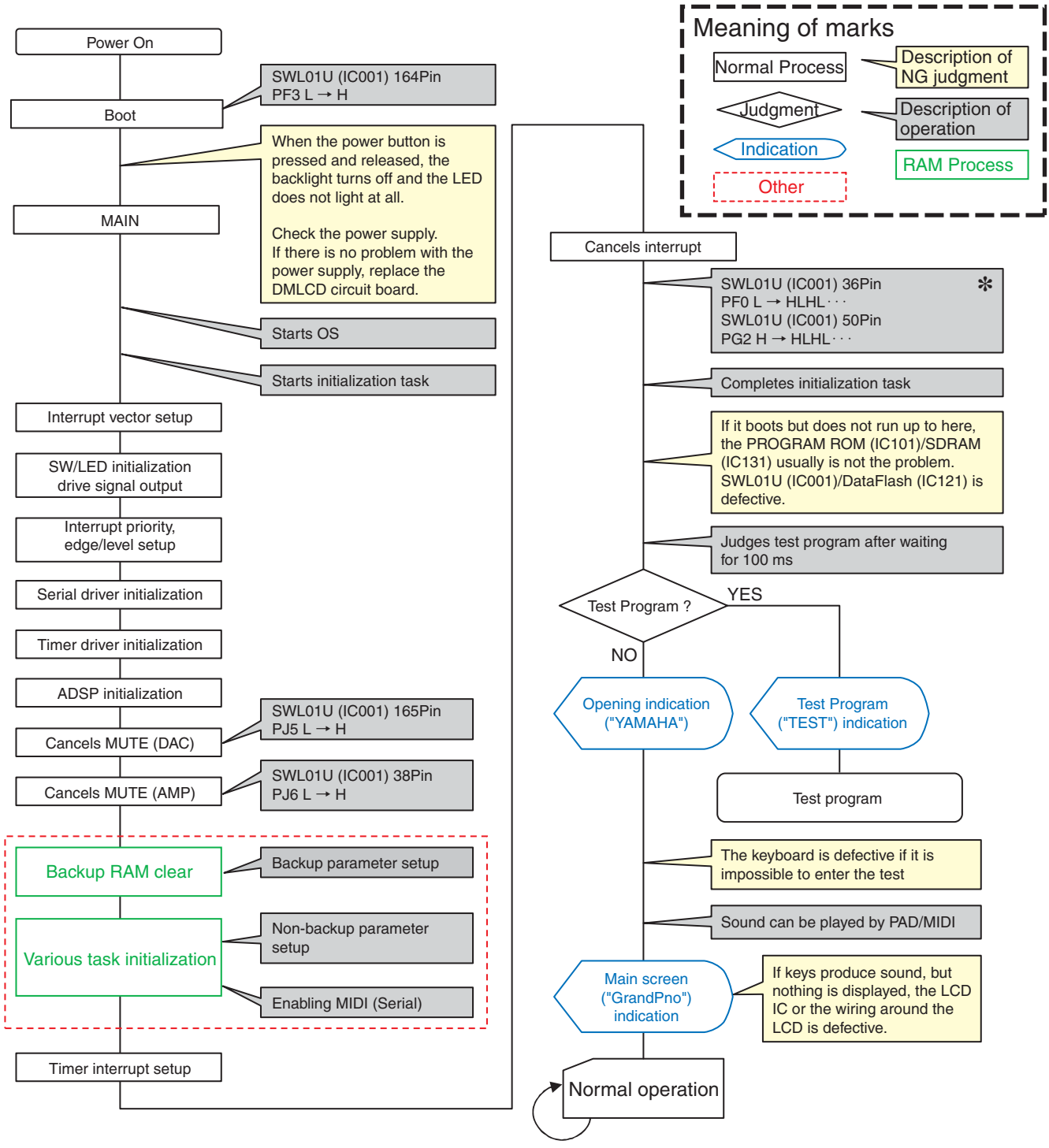

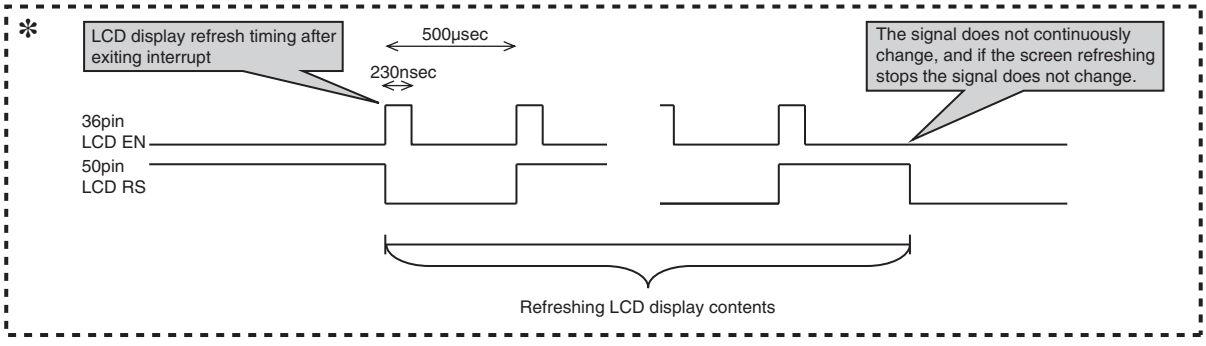

DMLCD CIRCUIT BOARD CHECK METHOD

The DMLCD Circuit Board is provided with test points for service check purposes.
Check the test points on the DMLCD Circuit Board if the following symptoms appear.

Symptoms and check items

① No LCD display with Power SW ON --> Check items 2 to 6 sequentially
② No sound or distorted sound --> Check items 1, 7 and 8

Test Point

NO.	Test Point	Circuit	Judgment criteria	Measured by	Parts with possible defects
1	+5A	5 V power for analog circuit	5V±0.2V	Multimeter	IC100 (On AMJK Circuit Board)
2	+5D	5 V power for digital circuit	5V±0.2V	Multimeter	IC100 (On AMJK Circuit Board)
3	+3.3D	3.3 V power for digital circuit	3.3V±0.1V	Multimeter	IC801
4	+1.8D	1.8 V power for digital circuit	1.8V±0.1V	Multimeter	IC203
5	RESET	CPU & memory reset signal	3.3V±0.3V	Multimeter	IC111
6	+B	Battery voltage detection	11V±1V	Multimeter	R108 or FT1 (On AMJK Circuit Board)
7	DAC-L	DAC output L channel	There shall be audio output without distortion.	Signal Checker	IC201 or IC202
8	DAC-R	DAC output R channel	There shall be audio output without distortion.	Signal Checker	IC201 or IC202

Note: Use the standard AC adapter PA-150A for check operation.

DMLCD Circuit Board (ZE686000)

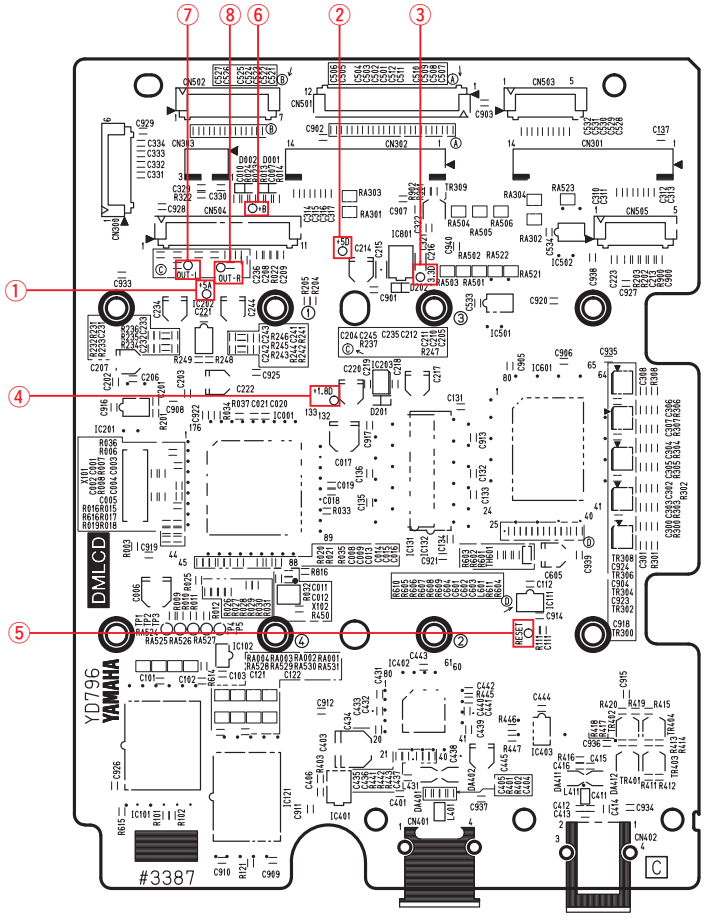

Component side

Digital Keyboard

KB-190
KB-191

PARTS LIST

■ CONTENTS

OVERALL ASSEMBLY 2
UPPER CASE ASSEMBLY 4
LOWER KEY BED ASSEMBLY 6
LOWER CASE ASSEMBLY 7
KEYBOARD ASSEMBLY 8
ELECTRICAL PARTS 9–15

Notes : DESTINATION ABBREVIATIONS

A : Australian model	M : South African model
B : British model	O : Chinese model
C : Canadian model	P : Blazillian model
D : German model	Q : South-east Asia model
E : European model	T : Taiwan model
F : French model	U : U.S.A. model
H : North European model	V : General export model (110V)
I : Indonesian model	W: General export model (220V)
J : Japanese model	N,X: General export model
K : Korean model	Y : Export model

■ WARNING

Components having special characteristics are marked ⚠ and must be replaced with parts having specification equal to those originally installed.

- The numbers “QTY” show quantities for each unit.
- The parts with “--” in “PART NO.” are not available as spare parts.
- This mark “ } ” in the REMARKS column means these parts are interchangeable.
- The second letter of the shaded ( ) part number is O, not zero.
- The second letter of the shaded ( ) part number is I, not one.

■ OVERALL ASSEMBLY

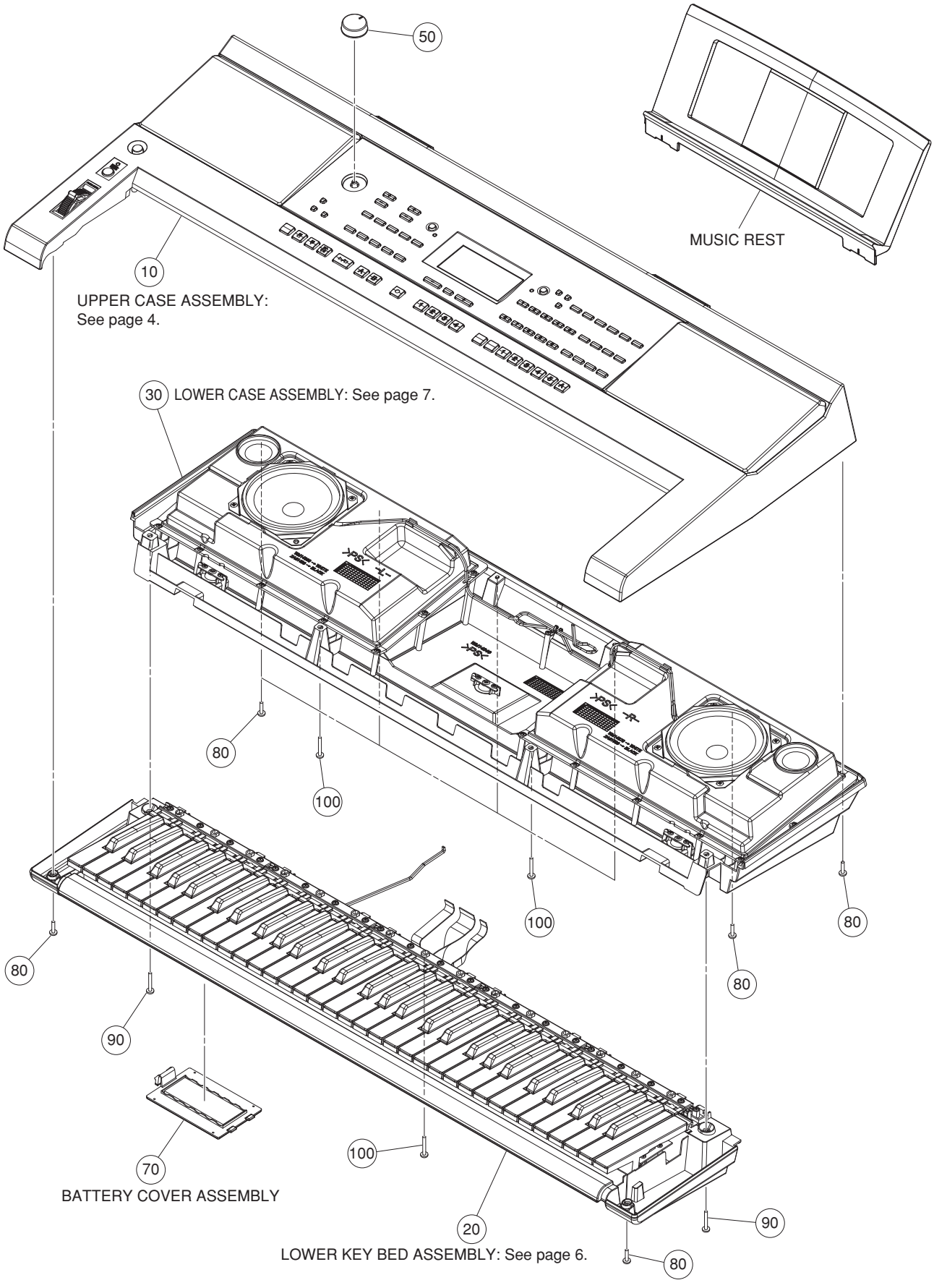

REF NO.	PART NO.	DESCRIPTION		部品名	REMARKS		QTY	RANK
		OVERALL ASSENBLY		総組立	KB-190/KB-191			
	--	OVERALL ASSENBLY		総組立	KB-190	(ZE31540)		
	--	OVERALL ASSENBLY		総組立	KB-191	(ZE31550)		
10	--	UPPER CASE ASSEMBLY		上ケースAss'y	KB-190	(ZE30950)		
10	--	UPPER CASE ASSEMBLY		上ケースAss'y	KB-191	(ZE30960)		
20	--	LOWER KEY BED ASSEMBLY		下ケース鍵盤Ass'y		(ZE33290)		
30	--	LOWER CASE ASSEMBLY		下ケースAss'y		(ZA30660)		
50	**VU43240R**	KNOB V BLACK		Vツマミ	MASTER VOLUME			01
70	**WR080100**	BATTERY COVER ASSEMBLY		電池蓋Ass'y				02
80	**WE98740R**	BIND HEAD TAPPING SCREW-B	3.0X12 MFZN2W3	Bタイト十BIND			8	01
90	**WF48930R**	BIND HEAD TAPPING SCREW-B	3.0X20 MFZN2W3	Bタイト十BIND			2	01
100	**WF491001**	BIND HEAD TAPPING SCREW-B	3.0X16 MFZN2W3	Bタイト十BIND			3	01
	--	NAME PLATE	CHN	銘板ラベル	KB-190	(ZE32190)		
	--	NAME PLATE	CHN	銘板ラベル	KB-191	(ZE32200)		
		ACCESSORIES		付属品				
	ZA339500	MUSIC REST LIGHT GRAY WITHE BAG		譜面板袋入り	KB-190			
	ZA318200	MUSIC REST BLACK WITH BAG		譜面板袋入り	KB-191			05
⚠	**WR527200**	AC ADAPTOR	PA-150A CHN	ACアダプター				

✻: New Parts

RANK: Japan only

■ UPPER CASE ASSEMBLY

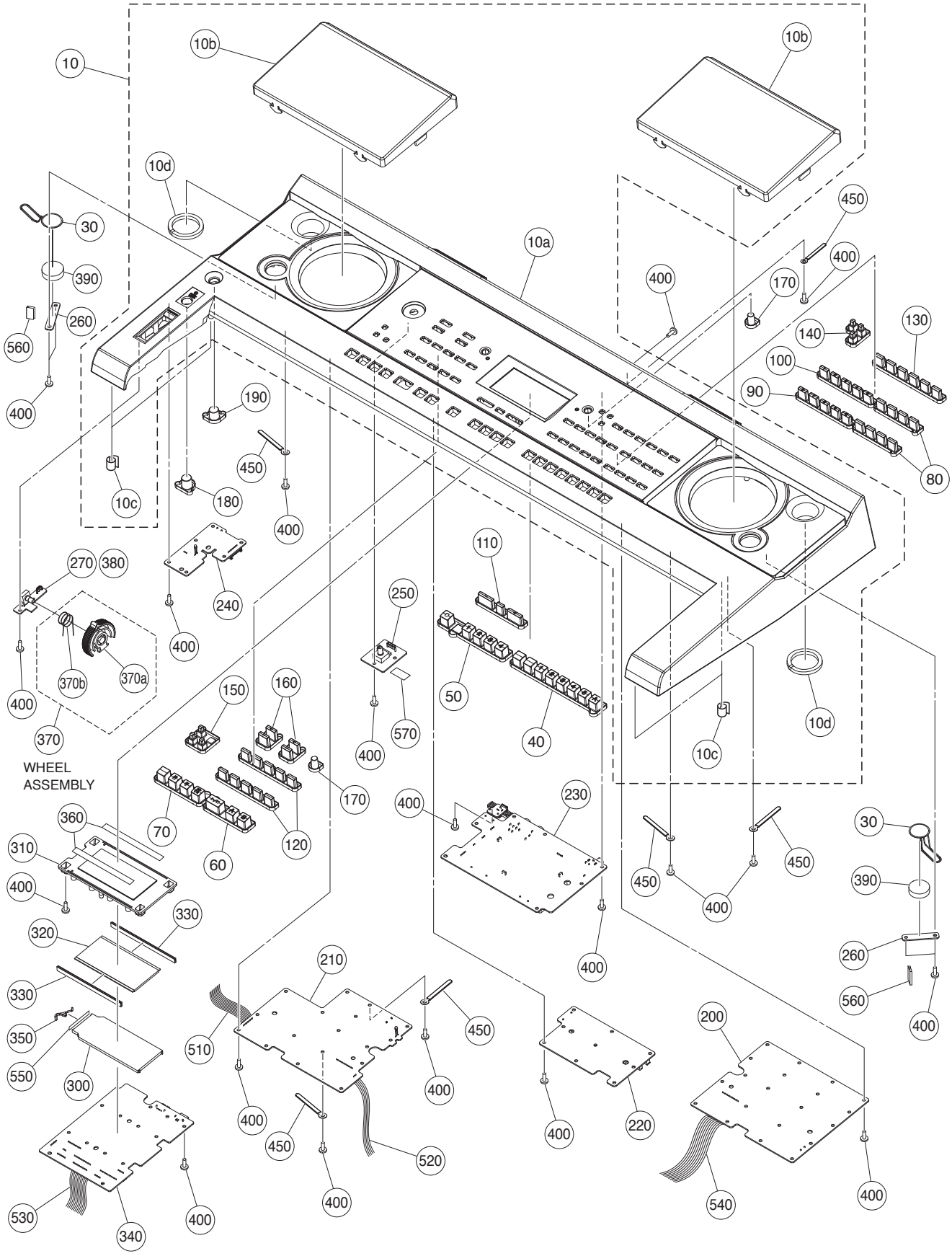

	REF NO.	PART NO.	DESCRIPTION		部品名	REMARKS	QTY	RANK
			UPPER CASE ASSEMBLY		上ケースAss'y	KB-190/KB-191		
		--	UPPER CASE ASSEMBLY		上ケースAss'y	KB-190 (ZE30950)		
		--	UPPER CASE ASSEMBLY		上ケースAss'y	KB-191 (ZE30960)		
*	10	**ZG147600**	UPPER CASE SUB ASSEMBLY		上ケースサブAss'y	KB-190		
*	10	**ZG147800**	UPPER CASE SUB ASSEMBLY		上ケースサブAss'y	KB-191		
	10a	--	UPPER CASE		上ケース塗装印刷品	KB-190 (ZE30930)		
	10a	--	UPPER CASE		上ケース塗装印刷品	KB-191 (ZE30940)		
	10b	--	SPEAKER GRILLE ASSEMBLY		SPグリルAss'y	KB-190 (ZA30920)	2	
	10b	--	SPEAKER GRILLE ASSEMBLY		SPグリルAss'y	KB-191 (ZA32100)	2	
	10c	**WG818300**	NONWOVEN FABRIC CLOTH		不織布		4	01
	10d	--	CUSHION	120X5X5	クッション	(WM16930)	2	
	30	**X0159B00**	LOUD SPEAKER	3.0cm	スピーカ	TWEETER	2	01
	40	**WZ390300**	PN SWITCH	x8	PNスイッチ	SONG NO.,...SONG 1/2/3/4/5/A		
	50	**WZ390200**	PN SWITCH	x5	PNスイッチ	MEMORY,REGIST 1/2/3/4		
	60	**WZ390100**	PN SWITCH	x3	PNスイッチ	START/STOP,MAIN A/B		
	70	**WZ390000**	PN SWITCH	x4	PNスイッチ	ACMP,SYNCRO STOP, SYNCRO START,INTRO/ENDING		
	80	**WZ390600**	PN SWITCH	x4	PNスイッチ	STRINGS1,...CLARINET, SYN LEAD,...SE/XG	2	
	90	**WZ390400**	PN SWITCH	x5	PNスイッチ	OBOE,...HARP		
	100	**WZ390900**	PN SWITCH	x5	PNスイッチ	PIANO,...VIBES		
	110	**WZ390800**	PN SWITCH	x3	PNスイッチ	FUNCTION,+/YES,-/NO		
	120	**WZ390700**	PN SWITCH	x5	PNスイッチ	8BEAT,...GD WUSHI, RUMBA,...METRO.	2	
	130	**WZ391200**	PN SWITCH	x6	PNスイッチ	ERHU,...ENSEMBLE		
	140	**WZ391500**	PN SWITCH	x3	PNスイッチ	SUSTAIN,DUAL,SPLIT		
*	150	**ZE333200**	PN SWITCH	x3	PNスイッチ	DEMO,TOUCH,REVERB		
	160	**WZ391300**	PN SWITCH	x2	PNスイッチ	STYLE VOL.[+],[-], TEMPO [+],[-]	2	
	170	**WZ391600**	PN SWITCH	x1	PNスイッチ	STYLE,VOICE	2	
	180	**WZ391800**	PN SWITCH	x1	PNスイッチ	PORTAMENTO		
	190	**WZ391700**	PN SWITCH	x1	PNスイッチ	STANDBY/ON		
	200	**WZ269500**	CIRCUIT BOARD	PNR	PNRシート			
	210	**WZ269600**	CIRCUIT BOARD	PNL	PNLシート			
	220	**WZ269700**	CIRCUIT BOARD	PNC	PNCシート			
*	230	**ZE780500**	CIRCUIT BOARD	AMJK	AMJKシート			
	240	**WZ269800**	CIRCUIT BOARD	PNP	PNPシート			
	250	**WZ270100**	CIRCUIT BOARD	MV	MVシート			
	260	**WZ270300**	CIRCUIT BOARD	TW	TWシート		2	
	270	**WZ270200**	CIRCUIT BOARD	PB	PBシート			
	300	**WB490800**	BACK LIGHT ASSEMBLY-B	PT	バックライトAss'y			
	310	**WZ373000**	LCD PANEL		LCDパネル成形品			
	320	**WZ330100**	LCD DISPLAY		液晶ディスプレイ			05
	330	**WZ963200**	RUBBER CNNECTOR	ZEBRA	ゴムコネクター		2	01
*	340	**ZE686000**	CIRCUIT BOARD	DMLCD	DMLCDシート			
	350	--	CONNECTOR ASSEMBLY	BL 2P L=70	BL線材	(WC60540)		
	360	--	NONWOVEN FABRIC CLOTH	5X8	不織布	(V706870)	2	
	370	**VY79310R**	WHEEL ASSEMBLY		ホイールAss'y	PITCH BEND		04
	370a	**VY75080R**	WHEEL		ホイール			
	370a	**VY750810**	WHEEL		ホイール			01
	370b	**VT44010R**	SPRING		ホイールバネ			03
	380	**TX920280**	GREASE	G-31KA 50g	グリス	(VE96850)		10
	390	**WD365700**	SPONGE	27	スポンジ		2	01
	400	**WE774300**	BIND HEAD TAPPING SCREW-B	3.0X8 MFZN2W3	Bタイト十BIND		92	
	450	--	CORD HOLDER		束線止め	(ZF68600)	6	
	510	--	CONNECTOR ASSEMBLY	PNP PH-9P	PNP束線	(ZA53660)		
	520	--	CONNECTOR ASSEMBLY	PN PHR-3P	PN束線	(ZC35770)		
	530	--	CONNECTOR ASSEMBLY	PNL PH-14P	PNL束線	(ZA57650)		
	540	--	CONNECTOR ASSEMBLY	PNL PH-14P	PNL束線	(ZA57650)		
	550	--	NONWOVEN FABRIC CLOTH		不織布	(WH34740)		
	560	--	NONWOVEN FABRIC CLOTH	10X7X0.35	不織布	(WN91440)	2	
	570	--	NONWOVEN FABRIC CLOTH	36X12X0.35	不織布	(WM89180)		

*: New Parts

RANK: Japan only

■ LOWER KEY BED ASSEMBLY

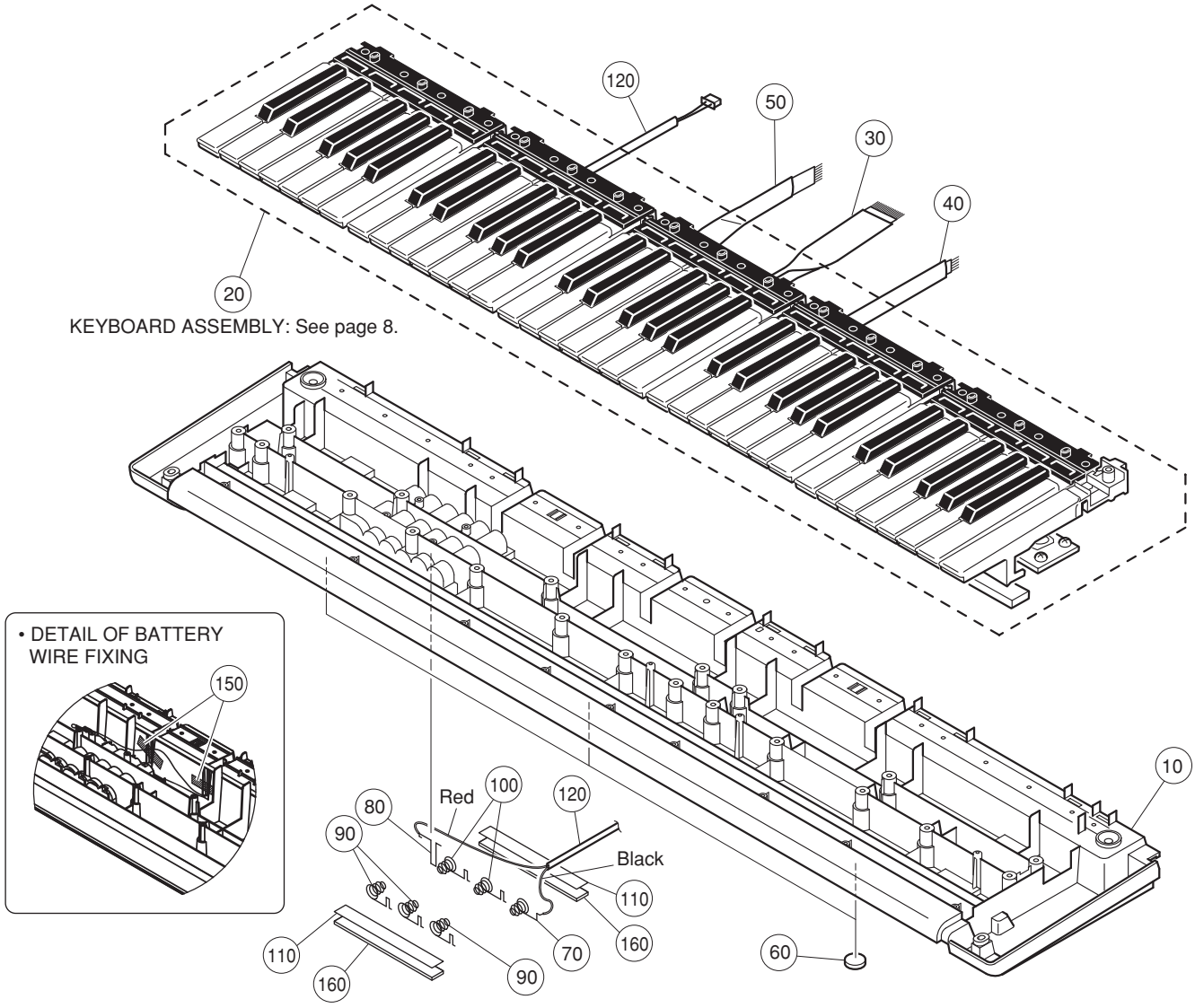

REF NO.	PART NO.	DESCRIPTION		部品名	REMARKS	QTY	RANK
		LOWER KEY BED ASSEMBLY		下ケース鍵盤Ａｓｓ’ｙ	KB-190/KB-191		
	--	LOWER KEY BED ASSEMBLY		下ケース鍵盤Ａｓｓ’ｙ	(ZE33290)		
10	**WD83950R**	LOWER CASE F	FRONT	下ケース成形品（Ｆ）			08
20	--	KEYBOARD ASSEMBLY	16N C61 D2M I	１６ＮＳ鍵盤	(ZE36970)		
30	--	CONNECTOR ASSEMBLY	12P L=250	束線	(ZA27390)		
40	--	CONNECTOR ASSEMBLY	5P L=250	束線	(ZA26060)		
40	--	CONNECTOR ASSEMBLY	5P L=250	束線	(ZA26061)		
50	--	CONNECTOR ASSEMBLY	7P L=200	束線	(ZA26420)		
50	--	CONNECTOR ASSEMBLY	7P L=200	束線	(ZA26421)		
60	**WW693500**	RUBBER FOOT		ゴム脚		3	01
70	**WD87920R**	SPRING TERMINAL A		接点バネＡ			01
80	**WD87930R**	SPRING TERMINAL B		接点バネＢ			01
90	**WD87940R**	SPRING TERMINAL C		接点バネＣ		3	01
100	**WD87970R**	SPRING TERMINAL D		接点バネＤ		2	01
110	--	NONWOVEN FABRIC CLOTH		不織布	(WD89680)	2	
120	--	CONNECTOR ASSEMBLY	BATT XH-3P (RED/BLACK)	ＢＡＴＴ束線	(ZA53710)		
150	**WG479400**	FILAMENT TAPE	12mmX50mm	フィラメントテープ		2	
160	--	CUSHION (PE)	98X6X1	クッション（ＰＥ）	(WU97160)	2	

✻: New Parts

RANK: Japan only

■ LOWER CASE ASSEMBLY

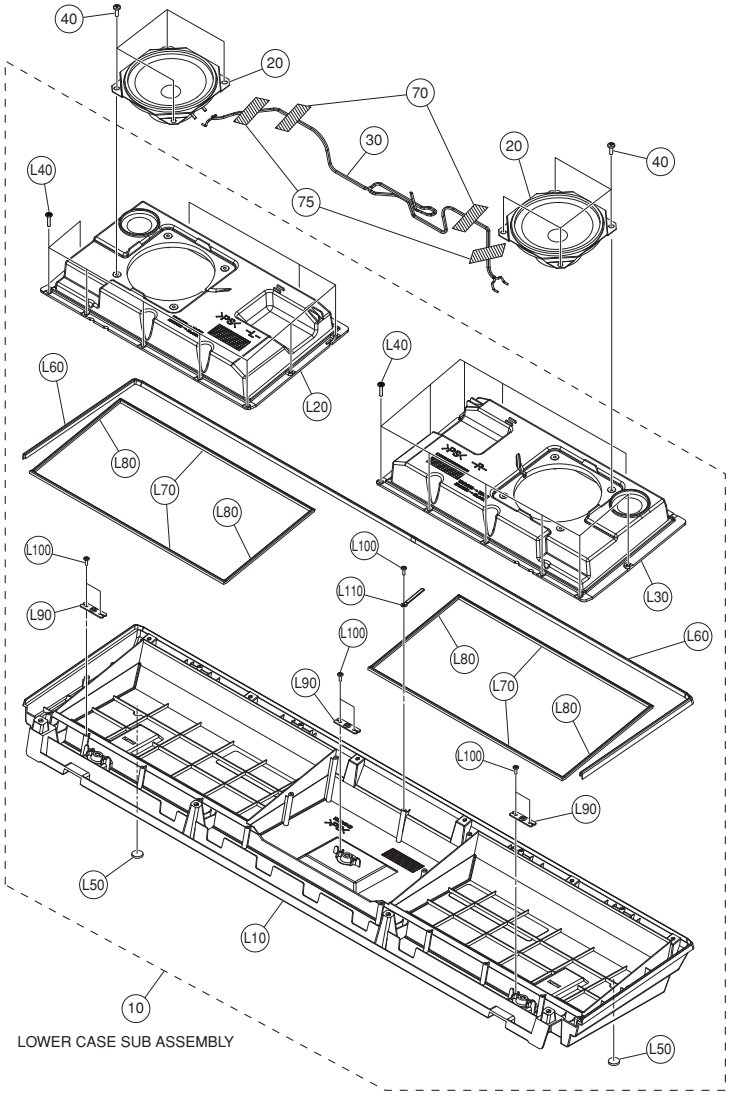

REF NO.	PART NO.	DESCRIPTION		部品名	REMARKS	QTY	RANK
		LOWER CASE ASSEMBLY		下ケースＡｓｓ’ｙ	KB-190/KB-191		
	--	LOWER CASE ASSEMBLY		下ケースＡｓｓ’ｙ	(ZA30660)		
10	**WM170500**	LOWER CASE SUB ASSEMBLY		下ケースサブＡｓｓ’ｙ			10
20	**YE096A00**	LOUD SPEAKER	12.0cm 6ohm 6W	スピーカ	WOOFER	2	
30	--	CONNECTOR ASSEMBLY	SP XH-4P	ＳＰ束線Ａｓｓ’ｙ	(ZA35470)		
40	**WE97460R**	BIND HEAD TAPPING SCREW-B	4.0X8 MFZN2W3	Ｂタイト十ＢＩＮＤ		8	01
70	**WG479400**	FILAMENT TAPE	12mmX50mm	フィラメントテープ		2	
75	**WG479400**	FILAMENT TAPE	12mmX50mm	フィラメントテープ		2	
80	--	NONWOVEN FABRIC CLOTH		不織布	(ZE20590)		
	WM170500	LOWER CASE SUB ASSEMBLY		下ケースサブＡｓｓ’ｙ			10
L10	**WM143400**	LOWER CASE R	REAR	下ケース成形品Ｒ			08
L20	**WM171000**	SPEAKER-BOX L ASSEMBLY	LEFT	スピーカボックス Ｌ			05
L30	**WM171100**	SPEAKER-BOX R ASSEMBLY	RIGHT	スピーカボックス Ｒ			05
L40	**WE98740R**	BIND HEAD TAPPING SCREW-B	3.0X12 MFZN2W3	Ｂタイト十ＢＩＮＤ		20	01
L50	**WW693500**	RUBBER FOOT		ゴム脚		2	01
L60	**WJ974700**	CUSHION (PE)	685X15X1	クッション（ＰＥ）		2	01
L70	**WH265000**	CUSHION (PE)	332X8X1	クッション（ＰＥ）		4	01
L80	**WH265100**	CUSHION (PE)	176X8X1	クッション（ＰＥ）		4	01
L90	**VI104400**	LEG HOLDER	CH	脚取り付け金具天津製		3	
L100	**WE774300**	BIND HEAD TAPPING SCREW-B	3.0X8 MFZN2W3	Ｂタイト十ＢＩＮＤ		7	
L110	--	CORD HOLDER		束線止め	(ZF68600)		

✻: New Parts

RANK: Japan only

■ KEYBOARD ASSEMBLY

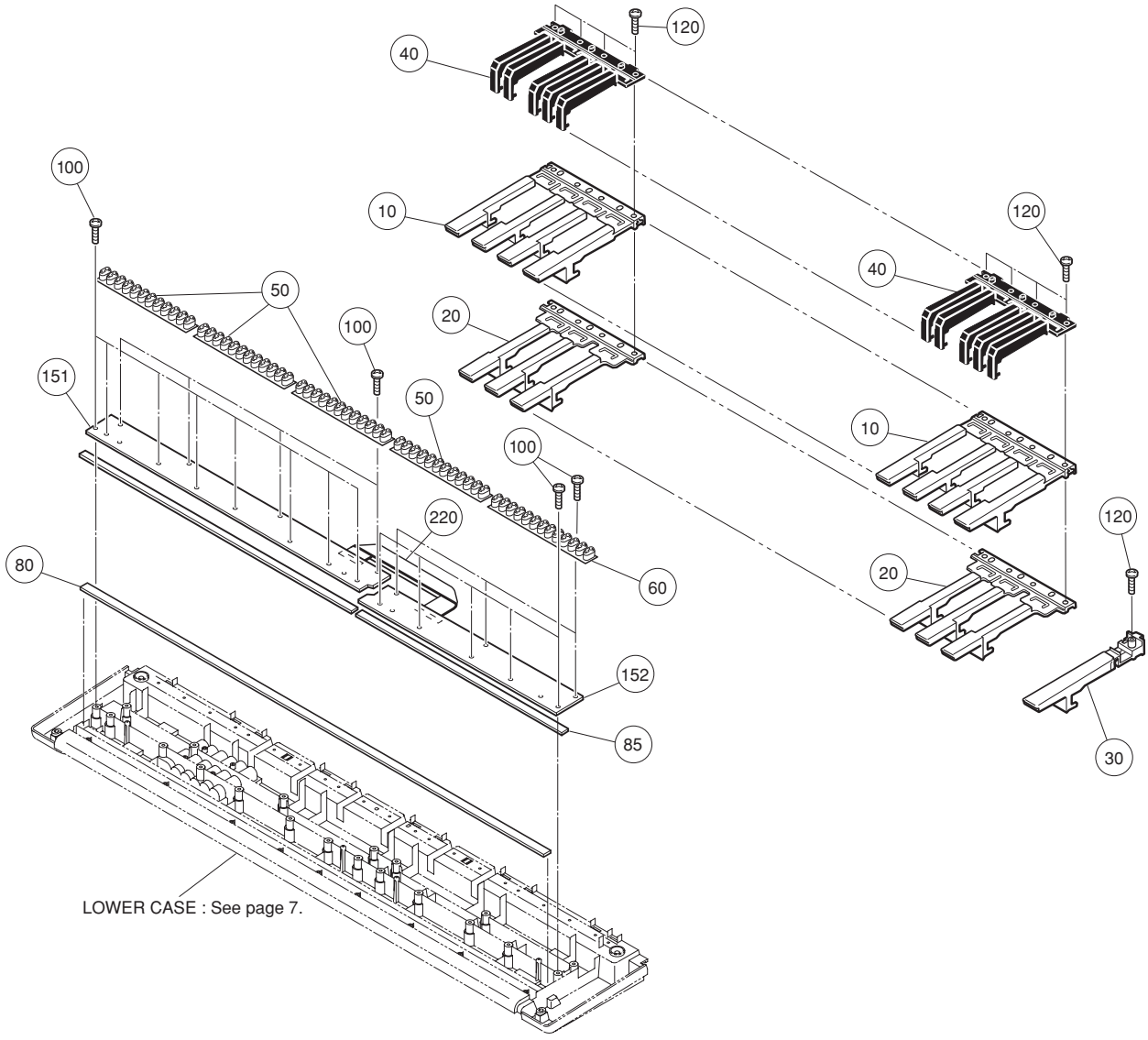

LOWER CASE : See page 7.

	REF NO.	PART NO.	DESCRIPTION		部品名	REMARKS	QTY	RANK
			KEYBOARD ASSEMBLY		16NS鍵盤	KB-190/KB-191		
		--	KEYBOARD ASSEMBLY	16N C61 D2M I	16NS鍵盤	(ZE36970)		
*	10	**ZE369800**	WHITE KEY CEGB	16NS CEGB	白鍵CEGB		5	
*	20	**ZE369900**	WHITE KEY DFA	16NS DFA	白鍵DFA		5	
	30	**V476030R**	WHITE KEY C'	16N C'	白鍵C'			02
	40	**WZ168300**	BLACK KEY	16NS # T=1.5	黒鍵		5	
	50	**V3413601**	RUBBER CONTACT	16N-2M OCT 2M	接点ゴム16N2M		4	04
	60	**V747740R**	RUBBER CONTACT	16N-2M 13K 2M	接点ゴム16N2M			04
	80	**VZ303020**	FELT L WHITE	LOWER 827X11	フェルトL			
	85	**VZ302901**	FELT U WHITE	UPPER 836X5	フェルトU			02
	100	**WE774300**	BIND HEAD TAPPING SCREW-B	3.0X8 MFZN2W3	Bタイト＋BIND		20	
	120	**WF49200R**	BIND HEAD TAPPING SCREW-P	3.0X20 MFZN2W3	Pタイト＋BIND		21	01
	151	**V869530R**	CIRCUIT BOARD	61L-MK	シート61L			04
	152	**V869550R**	CIRCUIT BOARD	61H-MK	シート61H			06
	220	**V869620R**	CONNECTOR ASSEMBLY	16N-2M-C61 L=210	中継束線			01

*: New Parts

RANK: Japan only

■ ELECTRICAL PARTS

AMJK

	REF NO.	PART NO.	DESCRIPTION		部品名	REMARKS	QTY	RANK
			ELECTRICAL PARTS		電気部品	KB-190/KB-191		
*		**ZE780500**	CIRCUIT BOARD	AMJK	AMJKシート	(ZE78040)(YD800D0)		
*		**ZE686000**	CIRCUIT BOARD	DMLCD	DMLCDシート	(ZE68590)(YD796C0,YE803A0)		
		WZ270100	CIRCUIT BOARD	MV	MVシート	(WZ26940)(YD799C0)		
		WZ270200	CIRCUIT BOARD	PB	PBシート	(WZ26940)(YD799C0)		
		WZ269700	CIRCUIT BOARD	PNC	PNCシート	(WZ26940)(YD799C0)		
		WZ269600	CIRCUIT BOARD	PNL	PNLシート	(WZ26940)(YD799C0)		
		WZ269800	CIRCUIT BOARD	PNP	PNPシート	(WZ26940)(YD799C0)		
		WZ270300	CIRCUIT BOARD	TW	TWシート	(WZ26940)(YD799C0)		
		WZ269500	CIRCUIT BOARD	PNR	PNRシート	(WZ69670)(YD925C0)		
		V869550R	CIRCUIT BOARD	61H-MK	シート61H	(V869540)(X2335D0)		06
		V869530R	CIRCUIT BOARD	61L-MK	シート61L	(V869520)(X2336C0)		04
*		**ZE780500**	CIRCUIT BOARD	AMJK	AMJKシート	(ZE78040)(YD800D0)		
		WE774300	BIND HEAD TAPPING SCREW-B	3.0X8 MFZN2W3	Bタイト＋BIND		3	
	C104	**V3773100**	ELECTROLYTIC CAPACITOR	4700.0 25.0V FORM.	ケミコン			
	CN100	**VK024600**	WIRE TRAP	52147 2P TE	ワイヤートラップ			
	CN101	**VL844700**	CONNECTOR	XH 3P TE	ベースツキポスト			
	CN103	**VI878300**	CABLE HOLDER	51048 5P TE	ケーブルホルダー			
	CN103	**VZ34170R**	CABLE HOLDER	51048 5P TE	ケーブルホルダー天津製			
	CN203	**VK024900**	WIRE TRAP	52147 5P TE	ワイヤートラップ			
	CN204	**VI878300**	CABLE HOLDER	51048 5P TE	ケーブルホルダー			
	CN204	**VZ34170R**	CABLE HOLDER	51048 5P TE	ケーブルホルダー天津製			
	CN205	**VK024700**	WIRE TRAP	52147 3P TE	ワイヤートラップ			
	CN209	**VL844800**	CONNECTOR	XH 4P TE	ベースツキポスト			
	CN210	**VK024600**	WIRE TRAP	52147 2P TE	ワイヤートラップ			
	CN211	**VI878300**	CABLE HOLDER	51048 5P TE	ケーブルホルダー			
	CN211	**VZ34170R**	CABLE HOLDER	51048 5P TE	ケーブルホルダー天津製			
	CN212	**VI878900**	CABLE HOLDER	51048 11P TE	ケーブルホルダー			
	CN212	**VY66880R**	CABLE HOLDER	51048 11P TE	ケーブルホルダー天津製			
	D103	**VY71710R**	DIODE	LT2A02-E JI	ダイオード			01
	D103	**WV008801**	DIODE	2A02-A0 TE-52	ダイオード			
	FT001	**ZA675500**	FET	TJ20A10M3 SUTO	FET			
⚠	FZ1	**ZE036600**	FUSE	TAIRATSUSHU 2.50A 250V	ヒューズ250V			
	IC100	**X5887A0R**	IC	BA50BC0T	IC	REGULATOR +5V 1.0A		03
	IC101	**YE334A00**	IC	TDA7266SA	IC	7W+7W DUAL BRIDGE AMPLIFIER		
	IC102	**XP844A00**	IC	NJM4556AL	IC	OP AMP		
⚠	JK100	**WZ704400**	DC CONNECTOR	DC-502-AG-PBT-2.0	電源コネクタ	DC IN 12V		01
	JK200	**LB101870**	PHONE CONNECTOR	JACK YKB21-5006	ホーンコネクタ	PHONES/OUTPUT		03
	JK200	**VV943300**	PHONE CONNECTOR	JACK HTJ-064-04A	ホーンコネクタ			02
	JK201	**WH945500**	PIN CONNECTOR	JACK YKB11-0843N 1P	ピンコネクタ1P	EXP.PEDAL		02
	JK202	**VC68750R**	PHONE CONNECTOR BLACK	JACK YKB21-5014	ホーンコネクタ（黒）	SUSTAIN		01
	JK202	**WE24520R**	PHONE CONNECTOR BLACK	JY-6314-01-020	ホーンコネクタ（黒）			
	K200	**--**	HEAT SINK		放熱板	(WZ49930)		
	C100	**UR828220**	ELECTROLYTIC CAPACITOR	220.00 10.0V RX TP	ケミコン			01
*	C100	**V3770100**	ELECTROLYTIC CAPACITOR	220.00 10.0V FORM.	ケミコン			
	C101	**WS464800**	SEMICONDUCTOR CERAMIC CAP.	0.1000 25V Z TATE	半導体セラコン			
	C102	**WS464800**	SEMICONDUCTOR CERAMIC CAP.	0.1000 25V Z TATE	半導体セラコン			
	C103	**UR867100**	ELECTROLYTIC CAPACITOR	10.00 50.0V RX TP	ケミコン			
*	C103	**V3775200**	ELECTROLYTIC CAPACITOR	10.00 50.0V FORM.	ケミコン			
	C105	**WS464800**	SEMICONDUCTOR CERAMIC CAP.	0.1000 25V Z TATE	半導体セラコン			
	C107	**WS464800**	SEMICONDUCTOR CERAMIC CAP.	0.1000 25V Z TATE	半導体セラコン			
	C202	**WS464800**	SEMICONDUCTOR CERAMIC CAP.	0.1000 25V Z TATE	半導体セラコン			
	C203	**WS464800**	SEMICONDUCTOR CERAMIC CAP.	0.1000 25V Z TATE	半導体セラコン			
	C209	**V5516600**	POLYESTER FILM CAPACITOR	1.0000 50V J	マイラーコン			
	C209	**VE327200**	MONOLITHIC POLYESTER F. CAP.	1.0 50V J RX TP	積層マイラーコン			
	C209	**VU838100**	MONOLITHIC POLYESTER F. CAP.	1.0000 50V J TATET	積層マイラーコン			
*	C209	**WW502700**	MONOLITHIC POLYESTER F. CAP.	1.0 63V J TP	マイラーコン			
	C210	**V5516600**	POLYESTER FILM CAPACITOR	1.0000 50V J	マイラーコン			
	C210	**VE327200**	MONOLITHIC POLYESTER F. CAP.	1.0 50V J RX TP	積層マイラーコン			
	C210	**VU838100**	MONOLITHIC POLYESTER F. CAP.	1.0000 50V J TATET	積層マイラーコン			
*	C210	**WW502700**	MONOLITHIC POLYESTER F. CAP.	1.0 63V J TP	マイラーコン			
	C211	**VR02620R**	CERAMIC CAPACITOR	1000P 63V K TATEJI	セラコンB			
	C211	**WW465700**	CERAMIC CAPACITOR	1000P 63V K TATETE	セラコン			01
	C212	**VR02620R**	CERAMIC CAPACITOR	1000P 63V K TATEJI	セラコンB			
	C212	**WW465700**	CERAMIC CAPACITOR	1000P 63V K TATETE	セラコン			01
	C213	**UR837470**	ELECTROLYTIC CAPACITOR	47.00 16.0V RX TP	ケミコン			
*	C213	**V3771100**	ELECTROLYTIC CAPACITOR	47.00 16.0V FORM.	ケミコン			
	C214	**UR867100**	ELECTROLYTIC CAPACITOR	10.00 50.0V RX TP	ケミコン			
*	C214	**V3775200**	ELECTROLYTIC CAPACITOR	10.00 50.0V FORM.	ケミコン			

*: New Parts

RANK: Japan only

AMJK

REF NO.	PART NO.	DESCRIPTION		部品名	REMARKS	QTY	RANK
C217	**WS464800**	SEMICONDUCTOR CERAMIC CAP.	0.1000 25V Z TATE	半導体セラコン			
C218	**UR838100**	ELECTROLYTIC CAPACITOR	100.00 16.0V RX TP	ケミコン			
C219	**UR838100**	ELECTROLYTIC CAPACITOR	100.00 16.0V RX TP	ケミコン			
C221	**WW464400**	CERAMIC CAPACITOR	100P 63V J TATETE	セラコン			01
C222	**WW464400**	CERAMIC CAPACITOR	100P 63V J TATETE	セラコン			01
C225	**WS464800**	SEMICONDUCTOR CERAMIC CAP.	0.1000 25V Z TATE	半導体セラコン			
C230	**WS464800**	SEMICONDUCTOR CERAMIC CAP.	0.1000 25V Z TATE	半導体セラコン			
C237	**UR837470**	ELECTROLYTIC CAPACITOR	47.00 16.0V RX TP	ケミコン			
C240	**WW465400**	CERAMIC CAPACITOR	220P 63V K TATETE	セラコン			
C241	**WW465400**	CERAMIC CAPACITOR	220P 63V K TATETE	セラコン			
C244	**UR866100**	ELECTROLYTIC CAPACITOR	1.00 50.0V RX TP	ケミコン			
C244	**V351190R**	ELECTROLYTIC CAPACITOR	1.00 50.0V TP	ケミコン			
C245	**UR866100**	ELECTROLYTIC CAPACITOR	1.00 50.0V RX TP	ケミコン			
C245	**V351190R**	ELECTROLYTIC CAPACITOR	1.00 50.0V TP	ケミコン			
C246	**WS464800**	SEMICONDUCTOR CERAMIC CAP.	0.1000 25V Z TATE	半導体セラコン			
C247	**UR837470**	ELECTROLYTIC CAPACITOR	47.00 16.0V RX TP	ケミコン			
C248	**UR837470**	ELECTROLYTIC CAPACITOR	47.00 16.0V RX TP	ケミコン			
⚠ D100	**VB941200**	DIODE	1SS133,1SS176 TE-5	ダイオード			
-102	**VB941200**	DIODE	1SS133,1SS176 TE-5	ダイオード			
⚠ D100	**VD631600**	DIODE	1SS133,176,HSS104	ダイオード			
-102	**VD631600**	DIODE	1SS133,176,HSS104	ダイオード			
D104	**WR195300**	DIODE	1D4 26	ダイオード			
D105	**WR195300**	DIODE	1D4 26	ダイオード			
J100	**--**	JUMPER CABLE	0.55	ジャンパー線	(VA07890)		
J101	**--**	JUMPER CABLE	0.55	ジャンパー線	(VA07890)		
J105	**--**	JUMPER CABLE	0.55	ジャンパー線	(VA07890)		
J106	**--**	JUMPER CABLE	0.55	ジャンパー線	(VA07890)		
J200	**--**	JUMPER CABLE	0.55	ジャンパー線	(VA07890)		
J201	**--**	JUMPER CABLE	0.55	ジャンパー線	(VA07890)		
L200	**--**	JUMPER CABLE	0.55	ジャンパー線	(VA07890)		
R100	**HF455150**	CARBON RESISTOR	150.0 1/4 J AX TP	カーボン抵抗			
R101	**HF455180**	CARBON RESISTOR	180.0 1/4 J AX TP	カーボン抵抗			
R102	**HF455100**	CARBON RESISTOR	100.0 1/4 J AX TP	カーボン抵抗			
R103	**HF457150**	CARBON RESISTOR	15.0K 1/4 J AX TP	カーボン抵抗			
R105	**HF456270**	CARBON RESISTOR	2.7K 1/4 J AX TP	カーボン抵抗			
R106	**HF456270**	CARBON RESISTOR	2.7K 1/4 J AX TP	カーボン抵抗			
R107	**HF457470**	CARBON RESISTOR	47.0K 1/4 J AX TP	カーボン抵抗			
R108	**HF455100**	CARBON RESISTOR	100.0 1/4 J AX TP	カーボン抵抗			
R109	**HF45727R**	CARBON RESISTOR	27.0K 1/4 J AX TP	カーボン抵抗			01
R110	**HF45822R**	CARBON RESISTOR	220.0K 1/4 J AX TP	カーボン抵抗			01
R111	**HF457470**	CARBON RESISTOR	47.0K 1/4 J AX TP	カーボン抵抗			
R202	**HF456680**	CARBON RESISTOR	6.8K 1/4 J AX TP	カーボン抵抗			
R203	**HF456680**	CARBON RESISTOR	6.8K 1/4 J AX TP	カーボン抵抗			
R205	**HF457330**	CARBON RESISTOR	33.0K 1/4 J AX TP	カーボン抵抗			
R210	**HF454100**	CARBON RESISTOR	10.0 1/4 J AX TP	カーボン抵抗			
R211	**HF454100**	CARBON RESISTOR	10.0 1/4 J AX TP	カーボン抵抗			
R212	**HF455100**	CARBON RESISTOR	100.0 1/4 J AX TP	カーボン抵抗			
-214	**HF455100**	CARBON RESISTOR	100.0 1/4 J AX TP	カーボン抵抗			
R215	**--**	JUMPER CABLE	0.55	ジャンパー線	(VA07890)		
R220	**HF457220**	CARBON RESISTOR	22.0K 1/4 J AX TP	カーボン抵抗			
R221	**HF457150**	CARBON RESISTOR	15.0K 1/4 J AX TP	カーボン抵抗			
R222	**HF457150**	CARBON RESISTOR	15.0K 1/4 J AX TP	カーボン抵抗			
R223	**HF45727R**	CARBON RESISTOR	27.0K 1/4 J AX TP	カーボン抵抗			01
R224	**HF457150**	CARBON RESISTOR	15.0K 1/4 J AX TP	カーボン抵抗			
R225	**HF455100**	CARBON RESISTOR	100.0 1/4 J AX TP	カーボン抵抗			
R226	**HF457100**	CARBON RESISTOR	10.0K 1/4 J AX TP	カーボン抵抗			
R230	**HF454150**	CARBON RESISTOR	15.0 1/4 J AX TP	カーボン抵抗			01
R232	**HF455100**	CARBON RESISTOR	100.0 1/4 J AX TP	カーボン抵抗			
R233	**HF455100**	CARBON RESISTOR	100.0 1/4 J AX TP	カーボン抵抗			
R234	**HF456100**	CARBON RESISTOR	1.0K 1/4 J AX TP	カーボン抵抗			
R235	**HF456100**	CARBON RESISTOR	1.0K 1/4 J AX TP	カーボン抵抗			
R236	**HF454150**	CARBON RESISTOR	15.0 1/4 J AX TP	カーボン抵抗			01
R240	**HF457100**	CARBON RESISTOR	10.0K 1/4 J AX TP	カーボン抵抗			
R241	**HF457100**	CARBON RESISTOR	10.0K 1/4 J AX TP	カーボン抵抗			
R242	**HF457180**	CARBON RESISTOR	18.0K 1/4 J AX TP	カーボン抵抗			
R243	**HF457180**	CARBON RESISTOR	18.0K 1/4 J AX TP	カーボン抵抗			
R244	**HF456120**	CARBON RESISTOR	1.2K 1/4 J AX TP	カーボン抵抗			
R245	**HF456150**	CARBON RESISTOR	1.5K 1/4 J AX TP	カーボン抵抗			
R246	**HF457470**	CARBON RESISTOR	47.0K 1/4 J AX TP	カーボン抵抗			
R247	**HF457470**	CARBON RESISTOR	47.0K 1/4 J AX TP	カーボン抵抗			

✻: New Parts

RANK: Japan only

AMJK and DMLCD

REF NO.	PART NO.	DESCRIPTION		部品名	REMARKS	QTY	RANK
R248	**HF455470**	CARBON RESISTOR	470.0 1/4 J AX TP	カーボン抵抗			
R249	**HF457150**	CARBON RESISTOR	15.0K 1/4 J AX TP	カーボン抵抗			
R250	**HF455100**	CARBON RESISTOR	100.0 1/4 J AX TP	カーボン抵抗			
R251	**HF454100**	CARBON RESISTOR	10.0 1/4 J AX TP	カーボン抵抗			
TR101	**V2797700**	TRANSISTOR	2SC5395-T112-E/F	トランジスタ 2SC			
TR101	**WC398400**	TRANSISTOR	2N5551C-AT/P	トランジスタ			01
TR102	**WZ853400**	TRANSISTOR	KTA1266-GR-AT/P GR	トランジスタ 2SA			01
TR200	**V2797700**	TRANSISTOR	2SC5395-T112-E/F	トランジスタ 2SC			
-205	**V2797700**	TRANSISTOR	2SC5395-T112-E/F	トランジスタ 2SC			
TR200	**WC398400**	TRANSISTOR	2N5551C-AT/P	トランジスタ			01
-205	**WC398400**	TRANSISTOR	2N5551C-AT/P	トランジスタ			01
*	**ZE686000**	CIRCUIT BOARD	DMLCD	DMLCDシート	(ZE68590)(YD796C0,YE803A0)		
CN300	**VF728300**	WIRE TRAP	52147 6P TE	ワイヤートラップ			
CN300	**--**	WIRE TRAP	2.0A 6P TE	ワイヤートラップ	(WW11610)		
CN301	**VE35260R**	CONNECTOR	PH 14P TE	ベースポスト			01
CN302	**VE35260R**	CONNECTOR	PH 14P TE	ベースポスト			01
CN303	**VB389900**	CONNECTOR	PH 3P TE	ベースポスト			
CN402	**V6802600**	USB CONNECTOR	USB 4P SE	USBジャック	USB TO HOST		02
CN402	**WR890200**	USB CONNECTOR	KM13200074 4P SE	USBコネクタ			
CN501	**VK025600**	WIRE TRAP	52147 12P TE	ワイヤートラップ			
CN501	**--**	WIRE TRAP	2.0A 12P TE	ワイヤートラップ	(WW11670)		
CN502	**VK025100**	WIRE TRAP	52147 7P TE	ワイヤートラップ			
CN502	**--**	WIRE TRAP	2.0A 7P TE	ワイヤートラップ	(WW11620)		
CN503	**VK024900**	WIRE TRAP	52147 5P TE	ワイヤートラップ			
CN503	**--**	WIRE TRAP	2.0A 5P TE	ワイヤートラップ	(WW11600)		
CN504	**VK025501**	WIRE TRAP	52147 11P TE	ワイヤートラップ			01
CN504	**--**	WIRE TRAP	2.0A 11P TE	ワイヤートラップ	(WW11660)		
CN505	**VK024900**	WIRE TRAP	52147 5P TE	ワイヤートラップ			
CN505	**--**	WIRE TRAP	2.0A 5P TE	ワイヤートラップ	(WW11600)		
C001	**US661220**	CERAMIC CAPACITOR (CHIP)	22P 50V J RECT.	チップセラ(CH)			
C002	**US661220**	CERAMIC CAPACITOR (CHIP)	22P 50V J RECT.	チップセラ(CH)			
C003	**US635100**	CERAMIC CAPACITOR (CHIP)	0.100 16V Z RECT.	チップセラ(F)			
-005	**US635100**	CERAMIC CAPACITOR (CHIP)	0.100 16V Z RECT.	チップセラ(F)			
C006	**UF017470**	ELECTROLYTIC CAPACITOR(CHIP)	47 6.3V	チップケミコン			
C007	**US662100**	CERAMIC CAPACITOR (CHIP)	100P 50V J RECT.	チップセラ(CH)			
C008	**US635100**	CERAMIC CAPACITOR (CHIP)	0.100 16V Z RECT.	チップセラ(F)			
C009	**US635100**	CERAMIC CAPACITOR (CHIP)	0.100 16V Z RECT.	チップセラ(F)			
C010	**US662100**	CERAMIC CAPACITOR (CHIP)	100P 50V J RECT.	チップセラ(CH)			
C011	**US662470**	CERAMIC CAPACITOR (CHIP)	470P 50V K RECT.	チップセラ(B)			01
C012	**US634100**	CERAMIC CAPACITOR (CHIP)	0.010 16V K RECT.	チップセラ(B)			
C013	**US635100**	CERAMIC CAPACITOR (CHIP)	0.100 16V Z RECT.	チップセラ(F)			
-016	**US635100**	CERAMIC CAPACITOR (CHIP)	0.100 16V Z RECT.	チップセラ(F)			
C017	**UF017470**	ELECTROLYTIC CAPACITOR (CHIP)	47 6.3V	チップケミコン			
C018	**US635100**	CERAMIC CAPACITOR (CHIP)	0.100 16V Z RECT.	チップセラ(F)			
-021	**US635100**	CERAMIC CAPACITOR (CHIP)	0.100 16V Z RECT.	チップセラ(F)			
C101	**US635100**	CERAMIC CAPACITOR (CHIP)	0.100 16V Z RECT.	チップセラ(F)			
-103	**US635100**	CERAMIC CAPACITOR (CHIP)	0.100 16V Z RECT.	チップセラ(F)			
C111	**US662100**	CERAMIC CAPACITOR (CHIP)	100P 50V J RECT.	チップセラ(CH)			
C112	**US635100**	CERAMIC CAPACITOR (CHIP)	0.100 16V Z RECT.	チップセラ(F)			
C121	**US635100**	CERAMIC CAPACITOR (CHIP)	0.100 16V Z RECT.	チップセラ(F)			
C122	**US635100**	CERAMIC CAPACITOR (CHIP)	0.100 16V Z RECT.	チップセラ(F)			
C131	**US635100**	CERAMIC CAPACITOR (CHIP)	0.100 16V Z RECT.	チップセラ(F)			
-136	**US635100**	CERAMIC CAPACITOR (CHIP)	0.100 16V Z RECT.	チップセラ(F)			
C201	**US635100**	CERAMIC CAPACITOR (CHIP)	0.100 16V Z RECT.	チップセラ(F)			
-206	**US635100**	CERAMIC CAPACITOR (CHIP)	0.100 16V Z RECT.	チップセラ(F)			
C207	**UF037100**	ELECTROLYTIC CAPACITOR (CHIP)	10 16V	チップケミコン			
C208	**US662100**	CERAMIC CAPACITOR (CHIP)	100P 50V J RECT.	チップセラ(CH)			
C209	**US662100**	CERAMIC CAPACITOR (CHIP)	100P 50V J RECT.	チップセラ(CH)			
C210	**US635100**	CERAMIC CAPACITOR (CHIP)	0.100 16V Z RECT.	チップセラ(F)			
-212	**US635100**	CERAMIC CAPACITOR (CHIP)	0.100 16V Z RECT.	チップセラ(F)			
C213	**US663100**	CERAMIC CAPACITOR (CHIP)	1000P 50V K RECT.	チップセラ(B)			01
C214	**UF037100**	ELECTROLYTIC CAPACITOR (CHIP)	10 16V	チップケミコン			
C215	**WN019700**	CERAMIC CAPACITOR (CHIP)	2.200 16V K RECT.	チップセラ			
C216	**WN019700**	CERAMIC CAPACITOR (CHIP)	2.200 16V K RECT.	チップセラ			
C217	**UF037100**	ELECTROLYTIC CAPACITOR (CHIP)	10 16V	チップケミコン			
C218	**WK145900**	CERAMIC CAPACITOR (CHIP)	0.47 10V K 1005	チップセラ			01
C219	**WK145900**	CERAMIC CAPACITOR (CHIP)	0.47 10V K 1005	チップセラ			01
C221	**US635100**	CERAMIC CAPACITOR (CHIP)	0.100 16V Z RECT.	チップセラ(F)			
C222	**UF037100**	ELECTROLYTIC CAPACITOR (CHIP)	10 16V	チップケミコン			

✻: New Parts

RANK: Japan only

DMLCD

REF NO.	PART NO.	DESCRIPTION		部品名	REMARKS	QTY	RANK
C223	**US635100**	CERAMIC CAPACITOR (CHIP)	0.100 16V Z RECT.	チップセラ（F）			
C231	**US634100**	CERAMIC CAPACITOR (CHIP)	0.010 16V K RECT.	チップセラ（B）			
C232	**US663270**	CERAMIC CAPACITOR (CHIP)	2700P 50V K RECT.	チップセラ（B）			
C233	**US663270**	CERAMIC CAPACITOR (CHIP)	2700P 50V K RECT.	チップセラ（B）			
C234	**UF06610R**	ELECTROLYTIC CAPACITOR (CHIP)	1 50V	チップケミコン			01
C235	**US662100**	CERAMIC CAPACITOR (CHIP)	100P 50V J RECT.	チップセラ（CH）			
C241	**US634100**	CERAMIC CAPACITOR (CHIP)	0.010 16V K RECT.	チップセラ（B）			
C242	**US663270**	CERAMIC CAPACITOR (CHIP)	2700P 50V K RECT.	チップセラ（B）			
C243	**US663270**	CERAMIC CAPACITOR (CHIP)	2700P 50V K RECT.	チップセラ（B）			
C244	**UF06610R**	ELECTROLYTIC CAPACITOR (CHIP)	1 50V	チップケミコン			01
C245	**US662100**	CERAMIC CAPACITOR (CHIP)	100P 50V J RECT.	チップセラ（CH）			
C300	**US662100**	CERAMIC CAPACITOR (CHIP)	100P 50V J RECT.	チップセラ（CH）			
-308	**US662100**	CERAMIC CAPACITOR (CHIP)	100P 50V J RECT.	チップセラ（CH）			
C310	**US662100**	CERAMIC CAPACITOR (CHIP)	100P 50V J RECT.	チップセラ（CH）			
-317	**US662100**	CERAMIC CAPACITOR (CHIP)	100P 50V J RECT.	チップセラ（CH）			
C321	**US662100**	CERAMIC CAPACITOR (CHIP)	100P 50V J RECT.	チップセラ（CH）			
C322	**US662100**	CERAMIC CAPACITOR (CHIP)	100P 50V J RECT.	チップセラ（CH）			
C329	**US663100**	CERAMIC CAPACITOR (CHIP)	1000P 50V K RECT.	チップセラ（B）			01
C414	**US635100**	CERAMIC CAPACITOR (CHIP)	0.100 16V Z RECT.	チップセラ（F）			
C501	**US662100**	CERAMIC CAPACITOR (CHIP)	100P 50V J RECT.	チップセラ（CH）			
-512	**US662100**	CERAMIC CAPACITOR (CHIP)	100P 50V J RECT.	チップセラ（CH）			
C521	**US662220**	CERAMIC CAPACITOR (CHIP)	220P 50V K RECT.	チップセラ（B）			01
-532	**US662220**	CERAMIC CAPACITOR (CHIP)	220P 50V K RECT.	チップセラ（B）			01
C533	**US635100**	CERAMIC CAPACITOR (CHIP)	0.100 16V Z RECT.	チップセラ（F）			
C534	**US635100**	CERAMIC CAPACITOR (CHIP)	0.100 16V Z RECT.	チップセラ（F）			
C601	**US635100**	CERAMIC CAPACITOR (CHIP)	0.100 16V Z RECT.	チップセラ（F）			
-604	**US635100**	CERAMIC CAPACITOR (CHIP)	0.100 16V Z RECT.	チップセラ（F）			
C605	**UF037100**	ELECTROLYTIC CAPACITOR (CHIP)	10 16V	チップケミコン			
C900	**US635100**	CERAMIC CAPACITOR (CHIP)	0.100 16V Z RECT.	チップセラ（F）			
-929	**US635100**	CERAMIC CAPACITOR (CHIP)	0.100 16V Z RECT.	チップセラ（F）			
C933	**US635100**	CERAMIC CAPACITOR (CHIP)	0.100 16V Z RECT.	チップセラ（F）			
-940	**US635100**	CERAMIC CAPACITOR (CHIP)	0.100 16V Z RECT.	チップセラ（F）			
D001	**VT332900**	DIODE	1SS355 TE-17 TP	ダイオード			
D001	**WG139300**	DIODE	KDS4148U-RTK/P TE	ダイオード			
D002	**VT332900**	DIODE	1SS355 TE-17 TP	ダイオード			
D002	**WG139300**	DIODE	KDS4148U-RTK/P TE	ダイオード			
DA411	**V9424900**	DIODE ARRAY	1SS372 TE85L	ダイオードアレイ			01
DA411	**WV973800**	DIODE ARRAY	DB3J316F0L 0.10A X	ダイオードアレイ			
DA412	**V9424900**	DIODE ARRAY	1SS372 TE85L	ダイオードアレイ			01
DA412	**WV973800**	DIODE ARRAY	DB3J316F0L 0.10A X	ダイオードアレイ			
IC001	**YA876A01**	IC	SWL01U	IC	CPU		05
* IC101	**YF007A00**	IC	S29GL256S90TFI020	IC	FLASH ROM 256M WAVE/PROGRAM		
IC102	**X5896A00**	IC	SN74LVC1G08DCKR	IC	AND GATE		01
IC102	**X5896B00**	IC	SN74LVC1G08DCKR	IC			01
IC102	**X6068A00**	IC	TC7SZ08FU	IC			
IC102	**YA350A00**	IC	74LVC1G08GW	IC			
IC111	**X4374A0R**	IC	S-80136ANMC-JCVT2G	IC	SYSTEM RESET		01
IC111	**X5888A0R**	IC	BD45365G	IC			01
IC121	**X3042E00**	IC	MX29LV160DBTI-70G	IC	FLASH ROM 16M		
IC131	**X2590C00**	IC	W9816G6IH-7	IC	SDRAM 16M		04
IC131	**X5693D00**	IC	M12L16161A-7TG2Q	IC			
IC201	**X6040A01**	IC	AK4385ET	IC	DAC		03
IC202	**YA326A00**	IC	BA4580RF-E2	IC	OP AMP		01
IC203	**YC287A00**	IC	RP130Q181D-TR-F	IC	REGULATOR +1.8V		01
IC501	**X7284A01**	IC	SN74LV138APWR	IC	DECODER		01
IC501	**XZ495B00**	IC	TC74VHC138FT(EL,K)	IC			01
IC502	**X7284A01**	IC	SN74LV138APWR	IC	DECODER		01
IC502	**XZ495B00**	IC	TC74VHC138FT(EL,K)	IC			01
IC601	**X3148A0R**	IC	NT3881DFG-01	IC	LCD DRIVER		05
IC601	**XZ987A01**	IC	ML9040A-B01GAZ03A	IC			05
IC601	**YC471A00**	IC	SPLC780D1-001A-HQ1	IC			
IC801	**YD113A00**	IC	RP131H331D-T1-FE	IC	REGULATOR +3.3V		01
L411	**WE863900**	COMMON MODE COIL	DLP11SN900HL2L	コモンモードコイル			01
L601	**WK139000**	CHIP INDUCTANCE	600 BK1005HM601-T	チップインダクタ			01
R003	**RD457100**	CARBON RESISTOR (CHIP)	10.0K 63M J RECT.	チップ抵抗			
R006	**RD457100**	CARBON RESISTOR (CHIP)	10.0K 63M J RECT.	チップ抵抗			
R007	**RD459100**	CARBON RESISTOR (CHIP)	1.0M 63M J RECT.	チップ抵抗			
R008	**RD45547R**	CARBON RESISTOR (CHIP)	470.0 63M J RECT.	チップ抵抗			01
R009	**RD457100**	CARBON RESISTOR (CHIP)	10.0K 63M J RECT.	チップ抵抗			
-012	**RD457100**	CARBON RESISTOR (CHIP)	10.0K 63M J RECT.	チップ抵抗			

*: New Parts

RANK: Japan only

DMLCD

REF NO.	PART NO.	DESCRIPTION		部品名	REMARKS	QTY	RANK
R013	**RD456820**	CARBON RESISTOR (CHIP)	8.2K 63M J RECT.	チップ抵抗			01
R014	**RD456220**	CARBON RESISTOR (CHIP)	2.2K 63M J RECT.	チップ抵抗			
R015	**RD455100**	CARBON RESISTOR (CHIP)	100.0 63M J RECT.	チップ抵抗			
-017	**RD455100**	CARBON RESISTOR (CHIP)	100.0 63M J RECT.	チップ抵抗			
R018	**RD45522R**	CARBON RESISTOR (CHIP)	220.0 63M J RECT.	チップ抵抗			01
R019	**RD45747R**	CARBON RESISTOR (CHIP)	47.0K 63M J RECT.	チップ抵抗			01
-022	**RD45747R**	CARBON RESISTOR (CHIP)	47.0K 63M J RECT.	チップ抵抗			01
R023	**WU570200**	CARBON RESISTOR (CHIP)	8.2K 63M D RECT.	チップ抵抗			
R024	**WU568800**	CARBON RESISTOR (CHIP)	2.2K 63M D RECT.	チップ抵抗			
R025	**RD457100**	CARBON RESISTOR (CHIP)	10.0K 63M J RECT.	チップ抵抗			
R026	**RD456220**	CARBON RESISTOR (CHIP)	2.2K 63M J RECT.	チップ抵抗			
R027	**RD458470**	CARBON RESISTOR (CHIP)	470.0K 63M J RECT.	チップ抵抗			
-029	**RD458470**	CARBON RESISTOR (CHIP)	470.0K 63M J RECT.	チップ抵抗			
R030	**RD454220**	CARBON RESISTOR (CHIP)	22.0 63M J RECT.	チップ抵抗			
R031	**RD454220**	CARBON RESISTOR (CHIP)	22.0 63M J RECT.	チップ抵抗			
R032	**RD45515R**	CARBON RESISTOR (CHIP)	150.0 63M J RECT.	チップ抵抗			01
R033	**RD455100**	CARBON RESISTOR (CHIP)	100.0 63M J RECT.	チップ抵抗			
R034	**RD45747R**	CARBON RESISTOR (CHIP)	47.0K 63M J RECT.	チップ抵抗			01
R037	**RD455100**	CARBON RESISTOR (CHIP)	100.0 63M J RECT.	チップ抵抗			
R101	**RD457100**	CARBON RESISTOR (CHIP)	10.0K 63M J RECT.	チップ抵抗			
R111	**RD457100**	CARBON RESISTOR (CHIP)	10.0K 63M J RECT.	チップ抵抗			
R121	**RD457100**	CARBON RESISTOR (CHIP)	10.0K 63M J RECT.	チップ抵抗			
R201	**RD45747R**	CARBON RESISTOR (CHIP)	47.0K 63M J RECT.	チップ抵抗			01
R202	**RD456100**	CARBON RESISTOR (CHIP)	1.0K 63M J RECT.	チップ抵抗			
R203	**RD45747R**	CARBON RESISTOR (CHIP)	47.0K 63M J RECT.	チップ抵抗			01
R204	**RD456100**	CARBON RESISTOR (CHIP)	1.0K 63M J RECT.	チップ抵抗			
R205	**RD456100**	CARBON RESISTOR (CHIP)	1.0K 63M J RECT.	チップ抵抗			
R231	**RD456330**	CARBON RESISTOR (CHIP)	3.3K 63M J RECT.	チップ抵抗			
R232	**RD456330**	CARBON RESISTOR (CHIP)	3.3K 63M J RECT.	チップ抵抗			
R233	**RD456220**	CARBON RESISTOR (CHIP)	2.2K 63M J RECT.	チップ抵抗			
R234	**RD45518R**	CARBON RESISTOR (CHIP)	180.0 63M J RECT.	チップ抵抗			01
R235	**RD45518R**	CARBON RESISTOR (CHIP)	180.0 63M J RECT.	チップ抵抗			01
R236	**RD456220**	CARBON RESISTOR (CHIP)	2.2K 63M J RECT.	チップ抵抗			
R237	**RD455100**	CARBON RESISTOR (CHIP)	100.0 63M J RECT.	チップ抵抗			
R241	**RD456330**	CARBON RESISTOR (CHIP)	3.3K 63M J RECT.	チップ抵抗			
R242	**RD456330**	CARBON RESISTOR (CHIP)	3.3K 63M J RECT.	チップ抵抗			
R243	**RD456220**	CARBON RESISTOR (CHIP)	2.2K 63M J RECT.	チップ抵抗			
R244	**RD45518R**	CARBON RESISTOR (CHIP)	180.0 63M J RECT.	チップ抵抗			01
R245	**RD45518R**	CARBON RESISTOR (CHIP)	180.0 63M J RECT.	チップ抵抗			01
R246	**RD456220**	CARBON RESISTOR (CHIP)	2.2K 63M J RECT.	チップ抵抗			
R247	**RD455100**	CARBON RESISTOR (CHIP)	100.0 63M J RECT.	チップ抵抗			
R248	**RD456100**	CARBON RESISTOR (CHIP)	1.0K 63M J RECT.	チップ抵抗			
R249	**RD45615R**	CARBON RESISTOR (CHIP)	1.5K 63M J RECT.	チップ抵抗			01
R300	**RD45747R**	CARBON RESISTOR (CHIP)	47.0K 63M J RECT.	チップ抵抗			01
-308	**RD45747R**	CARBON RESISTOR (CHIP)	47.0K 63M J RECT.	チップ抵抗			01
R322	**RD456100**	CARBON RESISTOR (CHIP)	1.0K 63M J RECT.	チップ抵抗			
R411	**RD456220**	CARBON RESISTOR (CHIP)	2.2K 63M J RECT.	チップ抵抗			
R412	**RD456270**	CARBON RESISTOR (CHIP)	2.7K 63M J RECT.	チップ抵抗			01
R413	**RD457100**	CARBON RESISTOR (CHIP)	10.0K 63M J RECT.	チップ抵抗			
R414	**RD45747R**	CARBON RESISTOR (CHIP)	47.0K 63M J RECT.	チップ抵抗			01
R415	**RD457100**	CARBON RESISTOR (CHIP)	10.0K 63M J RECT.	チップ抵抗			
R416	**RD45615R**	CARBON RESISTOR (CHIP)	1.5K 63M J RECT.	チップ抵抗			01
R417	**RD45747R**	CARBON RESISTOR (CHIP)	47.0K 63M J RECT.	チップ抵抗			01
R418	**RD457100**	CARBON RESISTOR (CHIP)	10.0K 63M J RECT.	チップ抵抗			
R419	**RD45612R**	CARBON RESISTOR (CHIP)	1.2K 63M J RECT.	チップ抵抗			01
R420	**RD456100**	CARBON RESISTOR (CHIP)	1.0K 63M J RECT.	チップ抵抗			
R601	**RD45615R**	CARBON RESISTOR (CHIP)	1.5K 63M J RECT.	チップ抵抗			01
R602	**RD45522R**	CARBON RESISTOR (CHIP)	220.0 63M J RECT.	チップ抵抗			01
R603	**RD454680**	CARBON RESISTOR (CHIP)	68.0 63M J RECT.	チップ抵抗			01
R604	**RD457100**	CARBON RESISTOR (CHIP)	10.0K 63M J RECT.	チップ抵抗			
R605	**RD456220**	CARBON RESISTOR (CHIP)	2.2K 63M J RECT.	チップ抵抗			
-609	**RD456220**	CARBON RESISTOR (CHIP)	2.2K 63M J RECT.	チップ抵抗			
R610	**RF45791R**	CARBON RESISTOR (CHIP)	91.0K D RECT.	チップ抵抗			
R614	**RD45000R**	CARBON RESISTOR (CHIP)	0.00 63M J RECT.	チップ抵抗			01
R615	**RD45000R**	CARBON RESISTOR (CHIP)	0.00 63M J RECT.	チップ抵抗			01
R900	**RD45000R**	CARBON RESISTOR (CHIP)	0.00 63M J RECT.	チップ抵抗			01
R901	**RD45515R**	CARBON RESISTOR (CHIP)	150.0 63M J RECT.	チップ抵抗			01
R902	**RD45515R**	CARBON RESISTOR (CHIP)	150.0 63M J RECT.	チップ抵抗			01
RA001	**WH213400**	RESISTOR ARRAY	47K X 4	抵抗アレイ			01
-004	**WH213400**	RESISTOR ARRAY	47K X 4	抵抗アレイ			01

✻: New Parts

RANK: Japan only

DMLCD and MV/PB/PNC/PNL/PNP/TW

REF NO.	PART NO.	DESCRIPTION		部品名	REMARKS	QTY	RANK
RA301	**WH209400**	RESISTOR ARRAY	1.0K X 4	抵抗アレイ			
RA302	**WH209400**	RESISTOR ARRAY	1.0K X 4	抵抗アレイ			
RA303	**WH213400**	RESISTOR ARRAY	47K X 4	抵抗アレイ			01
RA304	**WH213400**	RESISTOR ARRAY	47K X 4	抵抗アレイ			01
RA501	**WH209400**	RESISTOR ARRAY	1.0K X 4	抵抗アレイ			
-503	**WH209400**	RESISTOR ARRAY	1.0K X 4	抵抗アレイ			
RA504	**WH213400**	RESISTOR ARRAY	47K X 4	抵抗アレイ			01
-506	**WH213400**	RESISTOR ARRAY	47K X 4	抵抗アレイ			01
RA521	**WH207000**	RESISTOR ARRAY	100 X 4	抵抗アレイ			01
-523	**WH207000**	RESISTOR ARRAY	100 X 4	抵抗アレイ			01
RA524	**WH206200**	RESISTOR ARRAY	47 X 4	抵抗アレイ			01
-531	**WH206200**	RESISTOR ARRAY	47 X 4	抵抗アレイ			01
TH601	**V9140600**	CHIP THERMISTOR	ERTJ1VT152J 1.5K	チップサーミスタ			
* TH601	**WZ025800**	CHIP THERMISTOR	NCP18XW152J03RB	チップサーミスタ			
TR300	**WB12320R**	TRANSISTOR (ARRAY)	IMB10A T110	トランジスタアレイ			05
TR302	**WB12320R**	TRANSISTOR (ARRAY)	IMB10A T110	トランジスタアレイ			05
TR304	**WB12320R**	TRANSISTOR (ARRAY)	IMB10A T110	トランジスタアレイ			05
TR306	**WB12320R**	TRANSISTOR (ARRAY)	IMB10A T110	トランジスタアレイ			05
TR308	**WB12320R**	TRANSISTOR (ARRAY)	IMB10A T110	トランジスタアレイ			05
TR309	**VY67760R**	DIGITAL TRANSISTOR	DTC123JKA TP	デジタルトランジスタ			01
TR401	**VV556500**	TRANSISTOR	2SA1037AK Q,R,S TP	トランジスタ 2SA			
TR401	**WC529500**	TRANSISTOR	KTA1504S-Y,GR-RTK	トランジスタ			
TR402	**VV556400**	TRANSISTOR	2SC2412K Q,R,S TP	トランジスタ			
TR403	**VV556400**	TRANSISTOR	2SC2412K Q,R,S TP	トランジスタ			
TR404	**VV556500**	TRANSISTOR	2SA1037AK Q,R,S TP	トランジスタ 2SA			
TR404	**WC529500**	TRANSISTOR	KTA1504S-Y,GR-RTK	トランジスタ			
X101	**WE19440R**	QUARTZ CRYSTAL UNIT	16.9344MHz HC-49S-SM	水晶振動子			01
X102	**WU303100**	RESONATOR QUARTZ	48MHz C3SD48.0000MGE	水晶振動器			
	WZ270100	CIRCUIT BOARD	MV	MVシート	(WZ26940)(YD799C0)		
	WZ270200	CIRCUIT BOARD	PB	PBシート	(WZ26940)(YD799C0)		
	WZ269700	CIRCUIT BOARD	PNC	PNCシート	(WZ26940)(YD799C0)		
	WZ269600	CIRCUIT BOARD	PNL	PNLシート	(WZ26940)(YD799C0)		
	WZ269800	CIRCUIT BOARD	PNP	PNPシート	(WZ26940)(YD799C0)		
	WZ270300	CIRCUIT BOARD	TW	TWシート	(WZ26940)(YD799C0)		
CN200	**VI878300**	CABLE HOLDER	51048 5P TE	ケーブルホルダー			
CN200	**VZ34170R**	CABLE HOLDER	51048 5P TE	ケーブルホルダー天津製			
CN800	**VB85880R**	CONNECTOR	PH 9P SE	ベースポスト			01
CN802	**VI878100**	CABLE HOLDER	51048 3P TE	ケーブルホルダー			
CN802	**VZ34160R**	CABLE HOLDER	51048 3P TE	ケーブルホルダー天津製			
CN803	**VB389900**	CONNECTOR	PH 3P TE	ベースポスト			
CN804	**VE35260R**	CONNECTOR	PH 14P TE	ベースポスト			01
CN806	**VI878400**	CABLE HOLDER	51048 6P TE	ケーブルホルダー			
CN806	**VY66850R**	CABLE HOLDER	51048 6P TE	ケーブルホルダー天津製			01
CN900	**VB85880R**	CONNECTOR	PH 9P SE	ベースポスト			01
CN901	**VK024700**	WIRE TRAP	52147 3P TE	ワイヤートラップ			
CN901	**--**	WIRE TRAP	2.0A 3P TE	ワイヤートラップ	(WW11580)		
CN902	**VI878100**	CABLE HOLDER	51048 3P TE	ケーブルホルダー			
CN905	**VI878000**	CABLE HOLDER	51048 2P TE	ケーブルホルダー			
CN905	**VY66830R**	CABLE HOLDER	51048 2P TE	ケーブルホルダー天津製			
LD868	**WM279800**	LED	BL-B6141K-FP11-AT	LED	STYLE		01
LD960	**WM279800**	LED	BL-B6141K-FP11-AT	LED	PORTAMENTO		01
VR2	**VZ48630R**	ROTARY VARIABLE RESISTOR	B10K EVJ05DF20B14	ロータリーVR	PITCH BEND		03
VR200	**WC70980R**	ROTARY VARIABLE RESISTOR	A 5.0K XV014111YGP	二連ロータリーVR	MASTER VOLUME		02
WH001	**--**	CONNECTOR ASSEMBLY	3P L=100	束線	(ZA17230)		
WH002	**--**	CONNECTOR ASSEMBLY	5P L=200	束線	(ZA26040)		
WH003	**--**	CONNECTOR ASSEMBLY	3P L=50	束線	(ZA25600)		
WH004	**--**	CONNECTOR ASSEMBLY	6P L=50	束線	(ZA17690)		
WH005	**--**	CONNECTOR ASSEMBLY	TWL 2P L=120	TWL束線	(ZA37800)		
D605	**VB941200**	DIODE	1SS133,1SS176 TE-5	ダイオード			
-608	**VB941200**	DIODE	1SS133,1SS176 TE-5	ダイオード			
D605	**VD631600**	DIODE	1SS133,176,HSS104	ダイオード			
-608	**VD631600**	DIODE	1SS133,176,HSS104	ダイオード			
D605	**VV43780R**	DIODE	1N4148(DO-34)	ダイオード天津製			01
-608	**VV43780R**	DIODE	1N4148(DO-34)	ダイオード天津製			01
D800	**VB941200**	DIODE	1SS133,1SS176 TE-5	ダイオード			
-808	**VB941200**	DIODE	1SS133,1SS176 TE-5	ダイオード			
D800	**VD631600**	DIODE	1SS133,176,HSS104	ダイオード			
-808	**VD631600**	DIODE	1SS133,176,HSS104	ダイオード			
D800	**VV43780R**	DIODE	1N4148(DO-34)	ダイオード天津製			01

*: New Parts

RANK: Japan only

MV/PB/PNC/PNL/PNP/TW and PNR and 61H-MK ad 61L-MK

REF NO.	PART NO.	DESCRIPTION		部品名	REMARKS	QTY	RANK
-808	**VV43780R**	DIODE	1N4148(DO-34)	ダイオード 天津製			01
D960	**VB941200**	DIODE	1SS133,1SS176 TE-5	ダイオード			
D960	**VD631600**	DIODE	1SS133,176,HSS104	ダイオード			
D960	**VV43780R**	DIODE	1N4148(DO-34)	ダイオード 天津製			01
	WZ269500	CIRCUIT BOARD	PNR	PNRシート	(WZ69670)(YD925C0)		
CN700	**VE35260R**	CONNECTOR	PH 14P TE	ベーススポスト			01
CN701	**VI878000**	CABLE HOLDER	51048 2P TE	ケーブルホルダー			
CN701	**VY66830R**	CABLE HOLDER	51048 2P TE	ケーブルホルダー天津製			
CN702	**VI878000**	CABLE HOLDER	51048 2P TE	ケーブルホルダー			
CN702	**VY66830R**	CABLE HOLDER	51048 2P TE	ケーブルホルダー天津製			
LD735	**WM279800**	LED	BL-B6141K-FP11-AT	LED	VOICE		01
WH701	**--**	CONNECTOR ASSEMBLY	2P L=100	束線	(ZA25430)		
WH702	**--**	CONNECTOR ASSEMBLY	TWR 2P L=340	TWR束線	(ZA37790)		
D700	**VB941200**	DIODE	1SS133,1SS176 TE-5	ダイオード			
-708	**VB941200**	DIODE	1SS133,1SS176 TE-5	ダイオード			
D700	**VD631600**	DIODE	1SS133,176,HSS104	ダイオード			
-708	**VD631600**	DIODE	1SS133,176,HSS104	ダイオード			
D700	**VV43780R**	DIODE	1N4148(DO-34)	ダイオード 天津製			01
-708	**VV43780R**	DIODE	1N4148(DO-34)	ダイオード 天津製			01
	V869550R	CIRCUIT BOARD	61H-MK	シート61H	(V869540)(X2335D0)		06
CN01	**VK025600**	WIRE TRAP	52147 12P TE	ワイヤートラップ			
CN02	**VK024900**	WIRE TRAP	52147 5P TE	ワイヤートラップ			
CN03	**VK025600**	WIRE TRAP	52147 12P TE	ワイヤートラップ			
D073	**VB941200**	DIODE	1SS133,1SS176 TE-5	ダイオード			
-122	**VB941200**	DIODE	1SS133,1SS176 TE-5	ダイオード			
D073	**WP977700**	DIODE	HSS4148TA-E Q TE	ダイオード			
-122	**WP977700**	DIODE	HSS4148TA-E Q TE	ダイオード			
	V869530R	CIRCUIT BOARD	61L-MK	シート61L	(V869520)(X2336C0)		04
CN04	**VK025600**	WIRE TRAP	52147 12P TE	ワイヤートラップ			
CN05	**VK025100**	WIRE TRAP	52147 7P TE	ワイヤートラップ			
D001	**VB941200**	DIODE	1SS133,1SS176 TE-5	ダイオード			
-072	**VB941200**	DIODE	1SS133,1SS176 TE-5	ダイオード			
D001	**WP977700**	DIODE	HSS4148TA-E Q TE	ダイオード			
-072	**WP977700**	DIODE	HSS4148TA-E Q TE	ダイオード			
	X0159B00	LOUD SPEAKER	3.0cm	スピーカ	TWEETER	2	01
	YE096A00	LOUD SPEAKER	12.0cm 6ohm 6W	スピーカ	WOOFER	2	
	WZ330100	LCD DISPLAY		液晶ディスプレイ			05

✻: New Parts

RANK: Japan only

61H-MK

	REF NO.	PART NO.	DESCRIPTION		部品名	REMARKS	QTY	RANK
	CN02	**VK024900**	CONNECTOR	52147 5P TE	ワイヤートラップ			01
	CN03	**VK02560R**	CONNECTOR	52147 12P TE	ワイヤートラップ			01
	D073	**VB941200**	DIODE	1SS133,1SS176 TE-5	ダイオード			01
	-122	**VB941200**	DIODE	1SS133,1SS176 TE-5	ダイオード			01
	D073	**WP977700**	DIODE	HSS4148TA-E Q TE	ダイオード			
	-122	**WP977700**	DIODE	HSS4148TA-E Q TE	ダイオード			
*		**X0159B00**	LOUD SPEAKER	3.0cm	スピーカ	TWEETER		
*		**YE096A00**	LOUD SPEAKER	12.0cm 6ohm 6W	スピーカ	WOOFER		
*		**WZ330100**	LCD DISPLAY		液晶ディスプレイ			

*: New Parts

RANK: Japan only

■ KB-190/KB-191 BLOCK DIAGRAM

KB-190/KB-191

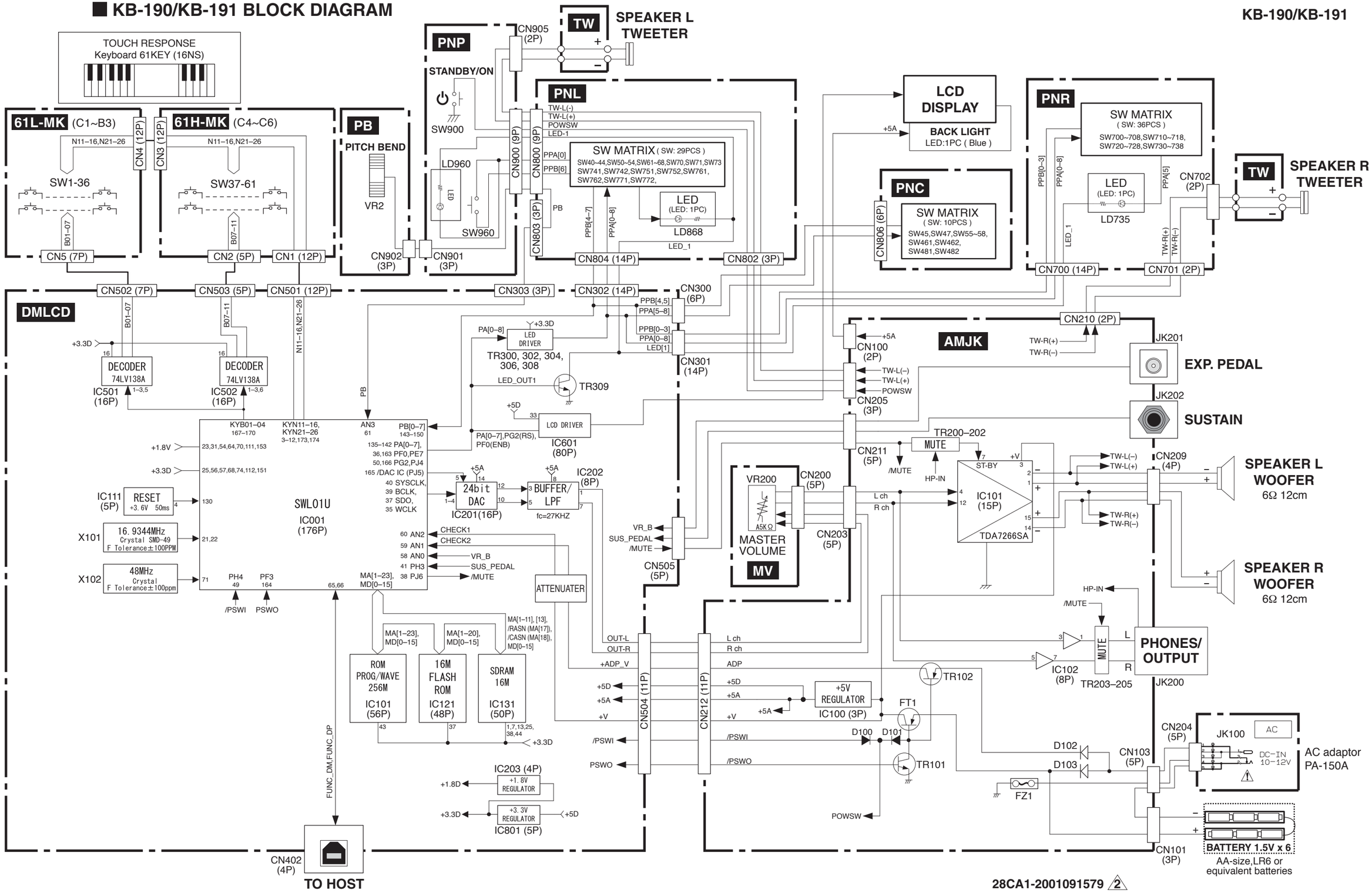

28CA1-2001091579 2

■ KB-190/KB-191 BLOCK DIAGRAM

■ KB-190/KB-191 OVERALL CIRCUIT DIAGRAM (AMJK, DMLCD, MV, PB, PNC, PNL, PNR, PNP, TW, 61H-MK, 61L-MK)

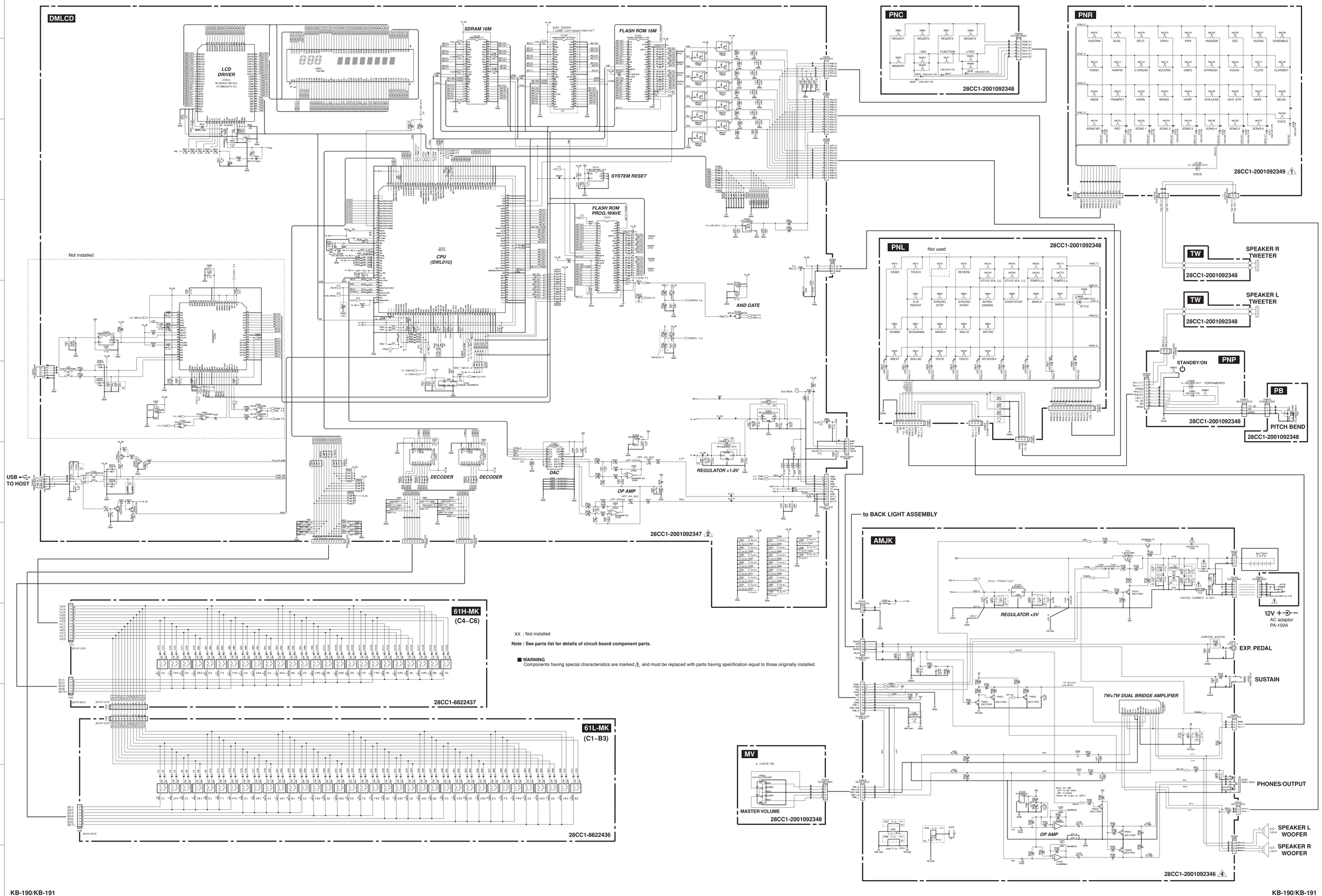

XX : Not installed

Note : See parts list for details of circuit board component parts.

■ WARNING
Components having special characteristics are marked ⚠ and must be replaced with parts having specification equal to those originally installed.