ELECTRIC ACOUSTIC GUITAR
SENSOR PICKUP
SYSTEM55

SERVICE MANUAL



SYSTEM55



FGX720SC

■ **CONTENTS**

SPECIFICATIONS 2
PANEL LAYOUT 3
OVERALL ASSEMBLY 4
ELECTRICAL PARTS 6
CIRCUIT BOARDS 8
CIRCUIT DIAGRAM 8

EG 011818

YAMAHA
HAMAMATSU, JAPAN

Copyright (c) Yamaha Corporation. All rights reserved. PDF '06.03

IMPORTANT NOTICE

This manual has been provided for the use of authorized Yamaha Retailers and their service personnel. It has been assumed that basic service procedures inherent to the industry, and more specifically Yamaha Products, are already known and understood by the users, and have therefore not been restated.

WARNING : Failure to follow appropriate service and safety procedures when servicing this product may result in personal injury, destruction of expensive components and failure of the product to perform as specified. For these reasons, we advise all Yamaha product owners that all service required should be performed by an authorized Yamaha Retailer or the appointed service representative.

IMPORTANT : This presentation or sale of this manual to any individual or firm does not constitute authorization, certification, recognition of any applicable technical capabilities, or establish a principal-agent relationship of any form.

The data provided is believed to be accurate and applicable to the unit (s) indicated on the cover. The research engineering, and service departments of Yamaha are continually striving to improve Yamaha products. Modifications are, therefore, inevitable and changes in specification are subject to change without notice or obligation to retrofit. Should any discrepancy appear to exist, please contact the distributor's Service Division.

WARNING : Static discharges can destroy expensive components. Discharge any static electricity your body may have accumulated by grounding yourself to the ground bus in the unit (heavy gauge black wires connect to this bus).

IMPORTANT : Turn the unit OFF during disassembly and parts replacement. Recheck all work before you apply power to the unit.

WARNING: CHEMICAL CONTENT NOTICE!

The solder used in the production of this product contains LEAD. In addition, other electrical/electronic and/or plastic (Where applicable) components may also contain traces of chemicals found by the California Health and Welfare Agency (and possibly other entities) to cause cancer and/or birth defects or other reproductive harm.

DO NOT PLACE SOLDER, ELECTRICAL/ELECTRONIC OR PLASTIC COMPONENTS IN YOUR MOUTH FOR ANY REASON WHAT SO EVER!

Avoid prolonged, unprotected contact between solder and your skin! When soldering, do not inhale solder fumes or expose eyes to solder/flux vapor!

If you come in contact with solder or components located inside the enclosure of this product, wash your hands before handling food.

■ SPECIFICATIONS

System	Monaural 1 way
Pickup	• Bar Sensor (Piezo type)
Pre-amplifier Controls	VOL., 3 Band (HIGH, MID, LOW) EQ control, AMF control
Output jack	Combination end pin / power switch
Output impedance	1 k-ohm
Power supply	9V DC, S-006P (6F22) dry cell battery
Battery life	Approx. 500 hours
Accessories	• Hexagonal wrench for neck adjustment x 1 • S-006P (6F22) dry cell battery x 1

■ PANEL LAYOUT

• Pickups

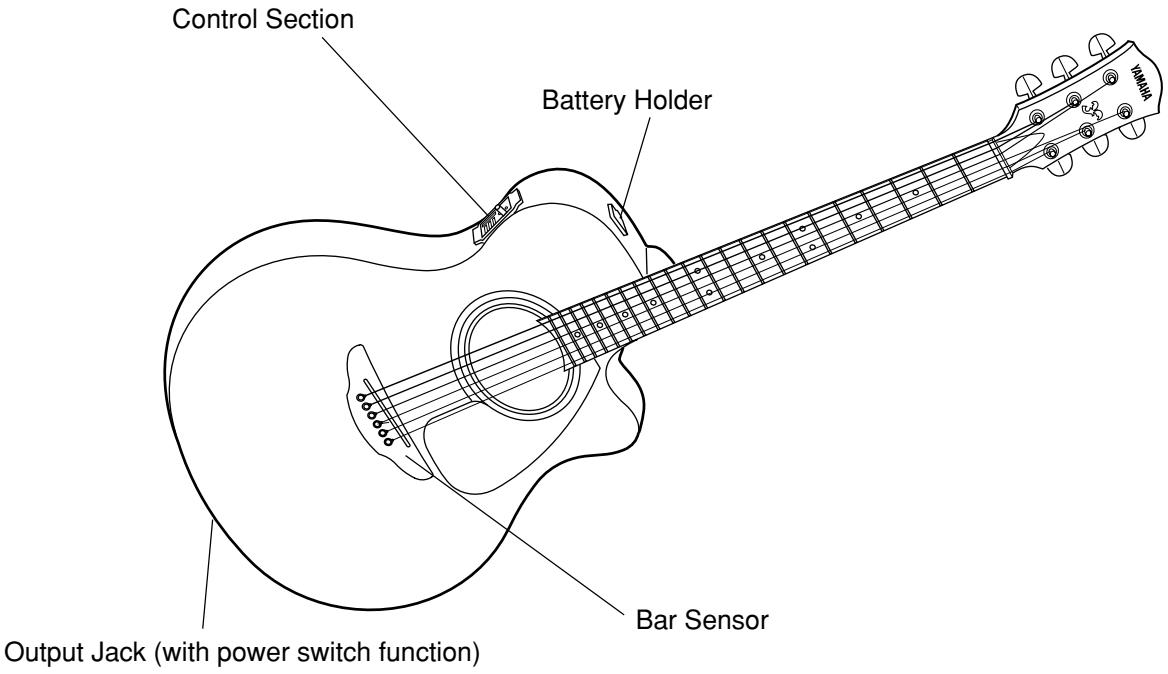

• Control Panel

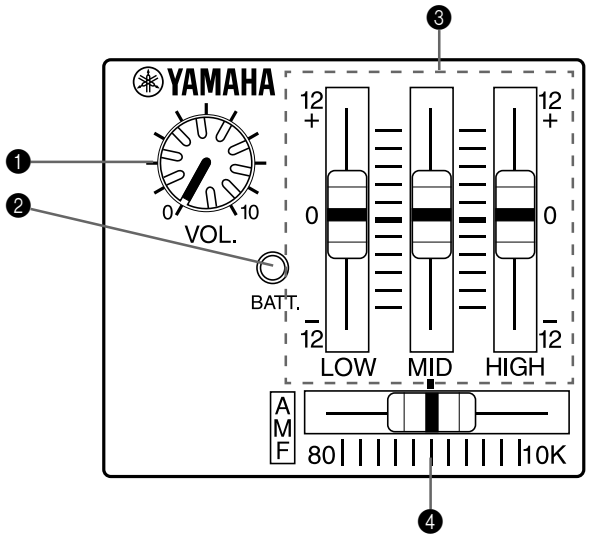

❶ VOL. (Volume) Control
❷ BATT. (Battery Check) Indicator
❸ 3 Band Equalizer
❹ AMF Control

■ OVERALL ASSEMBLY

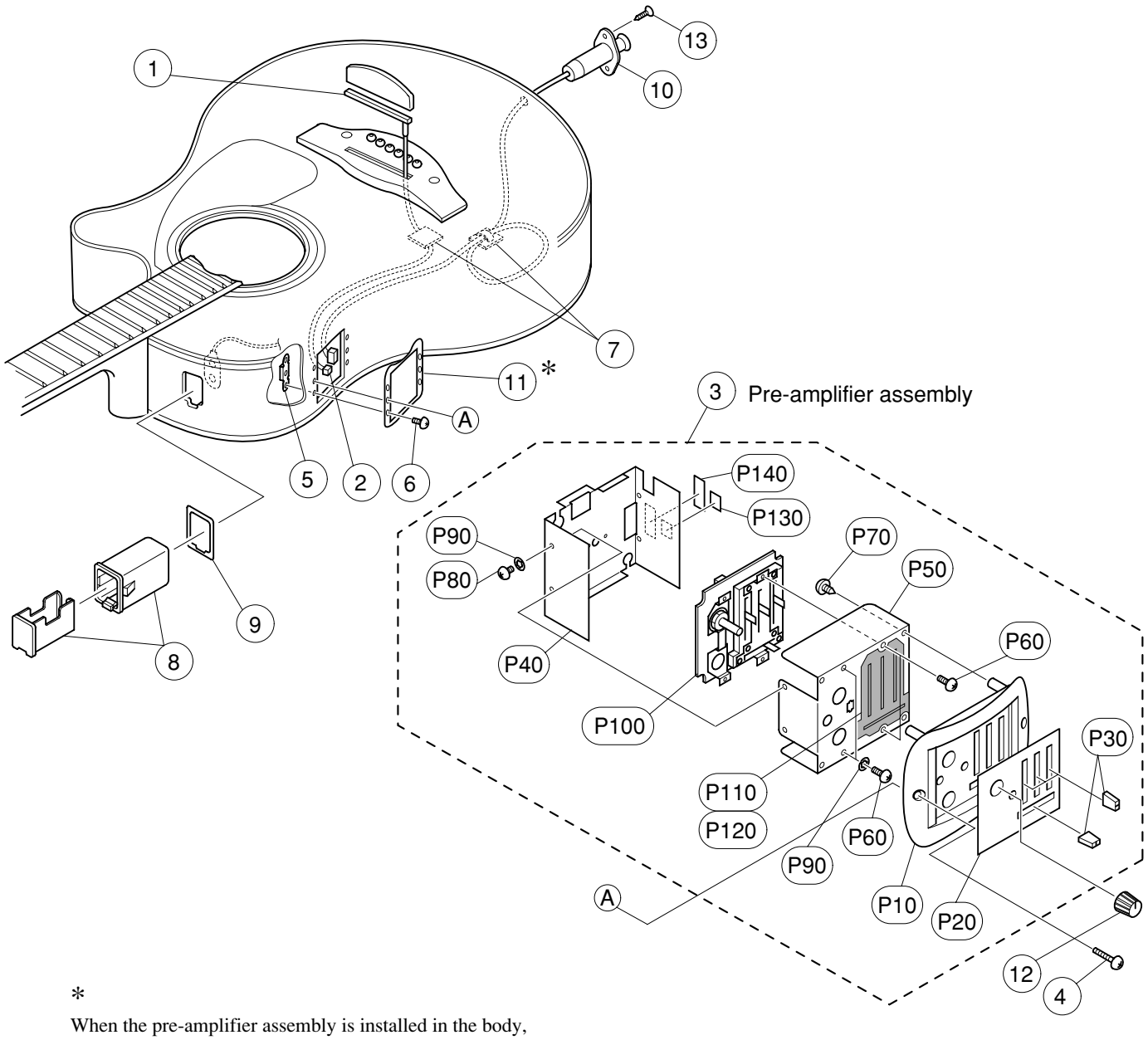

*

When the pre-amplifier assembly is installed in the body, a gap may be created between the pre-amplifier assembly and the body by the difference in the form of the body. Only when this occurs, install the spacer marked ⑪ with the pre-amplifier assembly so that a gap isn't created.

	REF NO.	PART NO.	DESCRIPTION			REMARKS	QTY	RANK
			OVERALL ASSEMBLY			SYSTEM55		
*	1	**QC878200**	Pickup Assembly	PP-607Y				
	2	**LB009020**	Connector Housing	XHP-2P				01
*	3	**QC880200**	Pre-amplifier Assembly	AMP-Z1A(CPX)				
	4	**QC271600**	Pan Head Screw	3x10 MFC2BL		Black	2	01
	5	**QC271500**	Floating Nut	0.6t			2	03
	6	**VT805400**	Truss Head Screw	2.5x6 MFC2BL		Black	4	01
	7	**VC668400**	Cord Clamp				2	02
	8	**QC111900**	Battery Holder					05
	9	**QC112000**	Cushion					03
*	10	**QC882100**	Cord with JACK					
	11	**QC616300**	Spacer	EPC-XH				02
	12	**QC187700**	Rotary Knob			VOL.		05
	13	--	Screw	2x10		With Jack	3	
*		**QC880200**	Pre-amplifier Assembly	AMP-Z1A(CPX)				
	P10	**QC588500**	Escutcheon,Amplifier	Z(CPX)				02
	P20	**QC602300**	Panel	Z1				03
	P30	**QC200500**	Slide Knob			LOW/MID/HIGH/AMF	4	08
	P40	**QC632000**	Case	LOWER Z1				03
	P50	**QC631900**	Case	UPPER Z1				03
	P60	**VT805400**	Truss Head Screw	2.5x6 MFC2BL		Black	4	01
	P70	**QC271700**	Pan Head Tapping Screw	3x6 MFNI33		Nickel	4	01
	P80	**QC187900**	Bind Head Tapping Screw	3x5 MFC2BL		Black	4	01
	P90	**QC224900**	Toothed Lock Washer	A3.0			6	02
*	P100	**QC880100**	Circuit Board	Z1A				
	P110	--	Dust-proof Sheet			(QC58910)		
	P120	--	Adhesive Tape			(QC58920)		
	P130	--	CE Sticker-S	SMALL		(QC34120)		
	P140	--	C-Tick Sticker			(QC62630)		

*: New Parts

RANK: Japan only

■ ELECTRICAL PARTS

REF NO.	PART NO.	DESCRIPTION			REMARKS	QTY	RANK
		ELECTRICAL PARTS			SYSTEM55		
*	**QC880100**	Circuit Board	Z1A		(QC58840)		
*	**QC880100**	Circuit Board	Z1A		(QC58840)		
	VT188900	LED Spacer	17.7L				02
	VR043800	Battery Holder	B Snap I-Type 250L				04
	VR047100	Bushing	KG-74				02
	QC588900	Angle Bracket A					
	QC589000	Angle Bracket B					
	QC615300	Pan Head Screw	2x2.5			3	
C1	**UB013470**	Ceramic Capacitor (Chip)	4700P K				01
C2	**UB052100**	Ceramic Capacitor (Chip)	100P J				01
C3	**FX804250**	Ceramic Capacitor (Chip)	0.068 K				
C5	**UB014100**	Ceramic Capacitor (Chip)	0.01 K				01
C6	**UF065330**	Electrolytic Cap.	0.33 50V				01
C7	**UB014100**	Ceramic Capacitor (Chip)	0.01 K				01
C8	**UB014100**	Ceramic Capacitor (Chip)	0.01 K				01
C9	**UB013120**	Ceramic Capacitor (Chip)	1200P K				01
C10	**UB052100**	Ceramic Capacitor (Chip)	100P J				01
C11	**UB051470**	Ceramic Capacitor (Chip)	47P J				01
C12	**UB052100**	Ceramic Capacitor (Chip)	100P J				01
C13	**UB051220**	Ceramic Capacitor (Chip)	22P J				01
C14	**UB014330**	Ceramic Capacitor (Chip)	0.033 K				01
C15	**FX804250**	Ceramic Capacitor (Chip)	0.068 K				
C16	**UB214560**	Ceramic Capacitor (Chip)	0.056 K				01
C17	**UB045100**	Ceramic Capacitor (Chip)	0.1 Z				01
C31	**UB052100**	Ceramic Capacitor (Chip)	100P J				01
C32	**UB051220**	Ceramic Capacitor (Chip)	22P J				01
C33	**UB014100**	Ceramic Capacitor (Chip)	0.01 K				01
C34	**UI337100**	Electrolytic Cap.	10 16V				01
C35	**UB014100**	Ceramic Capacitor (Chip)	0.01 K				01
C36	**AAX18840**	Electrolytic Cap.	47 16V				
C37	**AAX18840**	Electrolytic Cap.	47 16V				
CN1	**LB918020**	Connector Base Post	B2B-XH-A				01
CN2	**LB918030**	Connector Base Post	B3B-XH-A				01
IC1	**XN309A00**	IC	TL062CPS		} OP AMP		03
IC1	**XD091A00**	IC	NJM062M				
IC2	**XN309A00**	IC	TL062CPS		} OP AMP		03
IC2	**XD091A00**	IC	NJM062M				
LED1	**VG261500**	LED RED	3x5 RED		BATT.		01
R1	**RD256100**	Carbon Resistor (chip)	1K J				01
R2	**RD258680**	Carbon Resistor (chip)	680K J				01
R3	**RD257220**	Carbon Resistor (chip)	22K J				01
R4	**RD250000**	Carbon Resistor (chip)	0 J				01
R5	**RD257100**	Carbon Resistor (chip)	10K J				01
R6	**RD254470**	Carbon Resistor (chip)	47 J				01
R7	**RD257180**	Carbon Resistor (chip)	18K J				01
R8	**RD256680**	Carbon Resistor (chip)	6.8K J				01
R9	**RD257330**	Carbon Resistor (chip)	33K J				01
R10	**RD257180**	Carbon Resistor (chip)	18K J				01
R11	**RD256680**	Carbon Resistor (chip)	6.8K J				01
R12	**RD256820**	Carbon Resistor (chip)	8.2K J				01
R13	**RD256820**	Carbon Resistor (chip)	8.2K J				01
R14	**RD255330**	Carbon Resistor (chip)	330 J				01
R15	**RD255330**	Carbon Resistor (chip)	330 J				01
R16	**RD256330**	Carbon Resistor (chip)	3.3K J				01
R17	**RD256330**	Carbon Resistor (chip)	3.3K J				01
R18	**RD257180**	Carbon Resistor (chip)	18K J				01
R31	**RD257180**	Carbon Resistor (chip)	18K J				01
R32	**RD256100**	Carbon Resistor (chip)	1K J				01
R33	**RD258100**	Carbon Resistor (chip)	100K J				01
R34	**RD256100**	Carbon Resistor (chip)	1K J				01
R35	**RD256220**	Carbon Resistor (chip)	2.2K J				01
R36	**RD257100**	Carbon Resistor (chip)	10K J				01
R37	**RD257100**	Carbon Resistor (chip)	10K J				01
RX1	**XQ685A00**	IC	RH5VL55AA		RESET		02
VR1	**HX808620**	Slide Variable Resistor	50KB RA2043-20-15C		LOW		04
VR2	**HX808620**	Slide Variable Resistor	50KB RA2043-20-15C		HIGH		04
VR3	**HX808630**	Slide Variable Resistor	20KB RA2043-20-15C		MID		05
VR4	**QC585200**	Slide Variable Resistor	50KCx2 SL-2015G		AMF		03

*: New Parts

RANK: Japan only

REF NO.	PART NO.	DESCRIPTION			REMARKS	QTY	RANK
VR5	**QC271300**	Rotary Variable Resistor	10KB EVJ 02BF03B14		VOL.		05

*: New Parts

RANK: Japan only

■ CIRCUIT BOARD

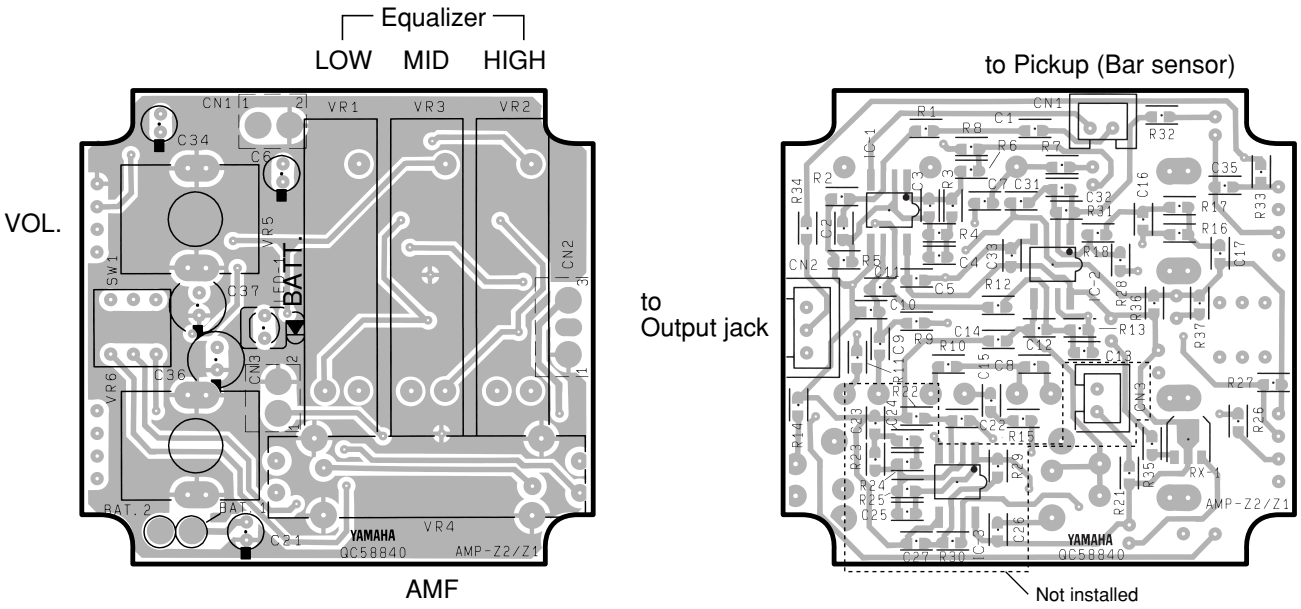

MC030-QC880100

■ CIRCUIT DIAGRAM

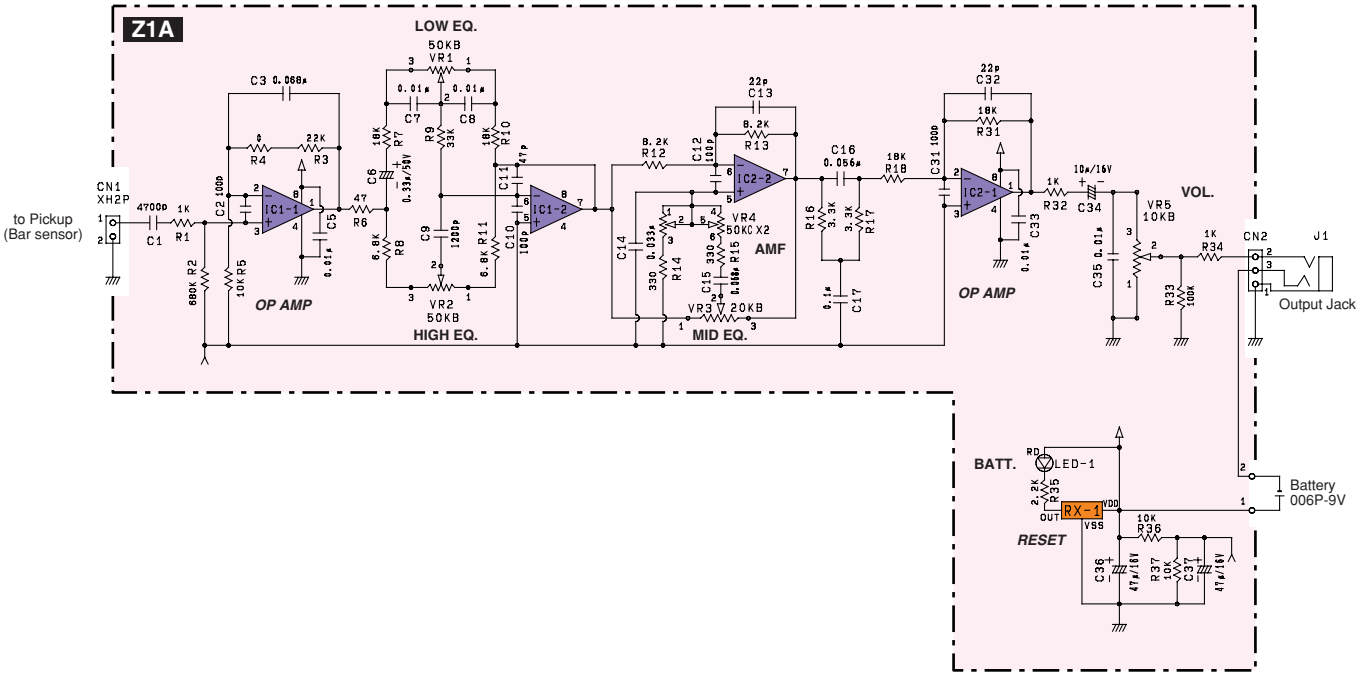

MC020-020