PORTATONE

EZ-250i

SERVICE MANUAL



■ **CONTENTS**

SPECIFICATION **3**
PANEL LAYOUT **4**
UNIT LAYOUT & WIRING **5**
BLOCK DIAGRAM **6**
DISASSEMBLY PROCEDURE **7**
LSI PIN DESCRIPTION **10**
IC BLOCK DIAGRAM **14**
CIRCUIT BOARDS **15**
TEST PROGRAM **19**
DATA BACKUP **22**
MIDI IMPLEMENTATION CHART **23**
PARTS LIST
OVERALL CIRCUIT DIAGRAM

YAMAHA
HAMAMATSU, JAPAN

PK **001709**

Copyright (c) Yamaha Corporation. All rights reserved. PDF-K147 IT (K) '03.06

IMPORTANT NOTICE

This manual has been provided for the use of authorized Yamaha Retailers and their service personnel. It has been assumed that basic service procedures inherent to the industry, and more specifically Yamaha Products, are already known and understood by the users, and have therefore not been restated.

WARNING: Failure to follow appropriate service and safety procedures when servicing this product may result in personal injury, destruction of expensive components, and failure of the product to perform as specified. For these reasons, we advise all Yamaha product owners that all service required should be performed by an authorized Yamaha Retailer or the appointed service representative.

IMPORTANT: The presentation or sale of this manual to any individual or firm does not constitute authorization, certification or recognition of any applicable technical capabilities, or establish a principle-agent relationship of any form.

The data provided is believed to be accurate and applicable to the unit(s) indicated on the cover. The research, engineering, and service departments of Yamaha are continually striving to improve Yamaha products. Modifications are, therefore, inevitable and changes in specification are subject to change without notice or obligation to retrofit. Should any discrepancy appear to exist, please contact the distributor's Service Division.

WARNING: Static discharges can destroy expensive components. Discharge any static electricity your body may have accumulated by grounding yourself to the ground bus in the unit (heavy gauge black wires connect to this bus).

IMPORTANT: Turn the unit OFF during disassembly and part replacement. Recheck all work before you apply power to the unit.

WARNING: CHEMICAL CONTENT NOTICE!

The solder used in the production of this product contains LEAD. In addition, other electrical/electronic and/or plastic (where applicable) components may also contain traces of chemicals found by the California Health and Welfare Agency (and possibly other entities) to cause cancer and/or birth defects or other reproductive harm.

DO NOT PLACE SOLDER, ELECTRICAL/ELECTRONIC OR PLASTIC COMPONENTS IN YOUR MOUTH FOR ANY REASON WHATSOEVER!

Avoid prolonged, unprotected contact between solder and your skin! When soldering, do not inhale solder fumes or expose eyes to solder/flux vapor!

If you come in contact with solder or components located inside the enclosure of this product, wash your hands before handling food.

■ WARNING

Components having special characteristics are marked ⚠ and must be replaced with parts having specification equal to those originally installed.

■ SPECIFICATIONS

Keyboards
- 61 standard-size keys (C1 - C6), with Touch Response.

Display
- Large multi-function LCD display (backlit)

Setup
- STANDBY/ON
- MASTER VOLUME : MIN - MAX

Panel Controls
- SONG, STYLE, VOICE, Dict., PC, LESSON L, R, METRONOME, PORTABLE GRAND, DEMO, FUNCTION, TOUCH, DUAL, SPLIT, HARMONY, TEMPO/TAP, [0]-[9], [+](YES), [–](NO)

Voice
- 108 panel voices + 12 drum kits + 360 XG Lite voices
- Polyphony : 32

Style
- 100 styles
- Style Control : ACMP ON/OFF, SYNC START, START/STOP, INTRO/ENDING/rit., MAIN/AUTO FILL
- Fingering : Multi fingering
- Style Volume

Yamaha Educational Suite
- Dictionary
- Lesson 1-4

Function
- Overall : Transpose, Tuning, Split Point, Touch Sensitivity, Sustain
- Volume : Style Volume, Song Volume, Metronome Volume, Metronome Time Signature
- Main Voice : Volume, Octave, Reverb Send Level, Chorus Send Level
- Dual Voice : Voice, Volume, Octave, Reverb Send Level, Chorus Send Level
- Split Voice : Voice, Volume, Octave, Reverb Send Level, Chorus Send Level
- Effect/Harmony : Reverb Type, Chorus Type, Harmony Type, Harmony Volume
- Utility : Local On/Off, External Clock, Initial Setup Send, Lesson Track R, Lesson Track L, Demo Cancel, Backup Clear

Effects
- Reverb : 9 types
- Chorus : 4 types
- Harmony : 26 types

Song
- 100 Songs
- Song Volume

MIDI
- Local On/Off
- Initial Setup Send
- External Clock

Auxiliary jacks
- PHONES/OUTPUT, DC IN 12V, USB, SUSTAIN

Amplifier (when using PA-3C power adaptor)
- 2.5W + 2.5W

Speakers
- 12cm x 2

Power Consumption (when using PA-3C power adaptor)
- 13W

Power Supply
- Adaptor : Yamaha PA-3C AC power adaptor
- Batteries : Six “D” size, R20P (LR20) or equivalent batteries

Dimensions (W x D x H)
- 931 x 348.8 x 127.9 mm (36-2/3" x 13-3/4" x 5-1/16")

Weight
- 5.0 kg (11 lbs.)

Supplied Accessories
- Music Rest
- Owner’s Manual
- Song Book
- CD-ROM
- USB Cable

Optional Accessories
- Headphones : HPE-150
- AC power adaptor : PA-3B/3C
- Footswitch : FC4, FC5
- Keyboard stand : L-2C, L-2L

■ PANEL LAYOUT

• Front Panel

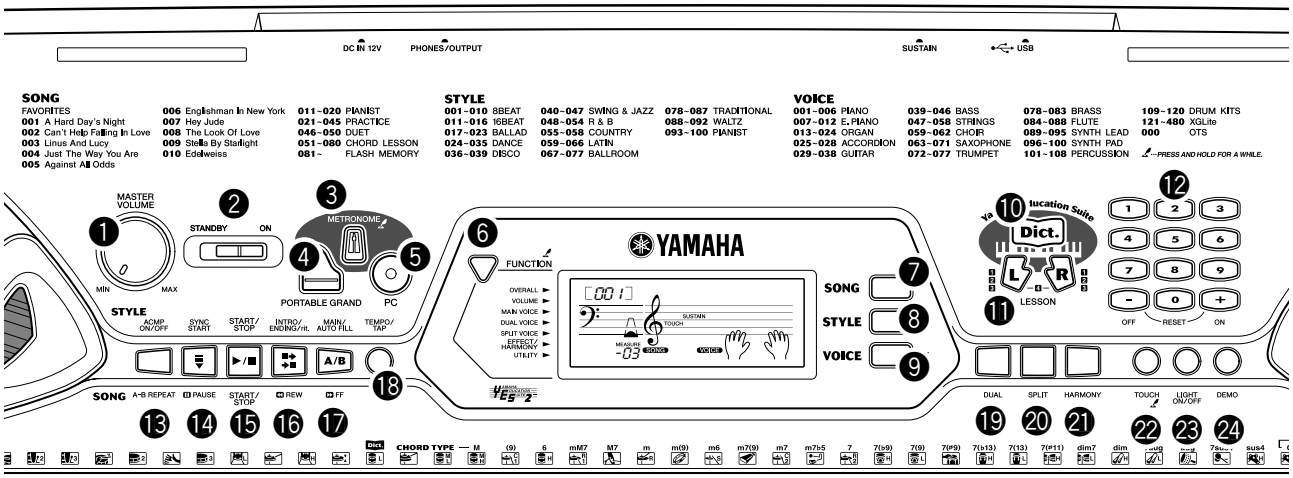

❶ [MASTER VOLUME] dial
❷ Power switch ([STANDBY/ON]
❸ [METRONOME] button
❹ [PORTABLE GRAND] button
❺ [PC] button
❻ [FUNCTION] button
❼ [SONG] button
❽ [STYLE] button
❾ [VOICE] button
❿ [Dict.] button
⓫ LESSON [L] (Left) and [R] (Right) buttons
⓬ Numeric keypad, [+/ON] and [—/OFF] buttons
⓭ [ACMP ON/OFF] / [A-B REPEAT] button
⓮ [SYNC START] / [❚❚ PAUSE] button
⓯ [START/STOP] button
⓰ [INTRO/ENDING/rit.] / [◀◀ REW] button
⓱ [MAIN/AUTO FILL] / [▶▶ FF] button
⓲ [TEMPO/TAP] button
⓳ [DUAL] button
⓴ [SPLIT] button
㉑ [HARMONY] button
㉒ [TOUCH] button
㉓ [LIGHT ON/OFF] button
㉔ [DEMO] button

• Rear Panel

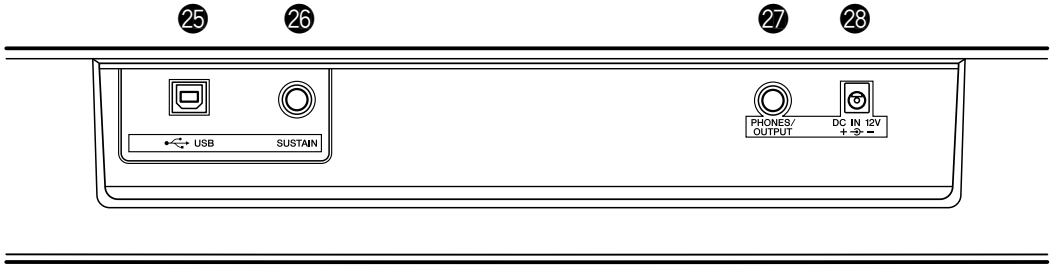

㉕ USB terminals
㉖ SUSTAIN jack
㉗ PHONES/OUTPUT jack
㉘ DC IN 12V jack

■ UNIT LAYOUT & WIRING

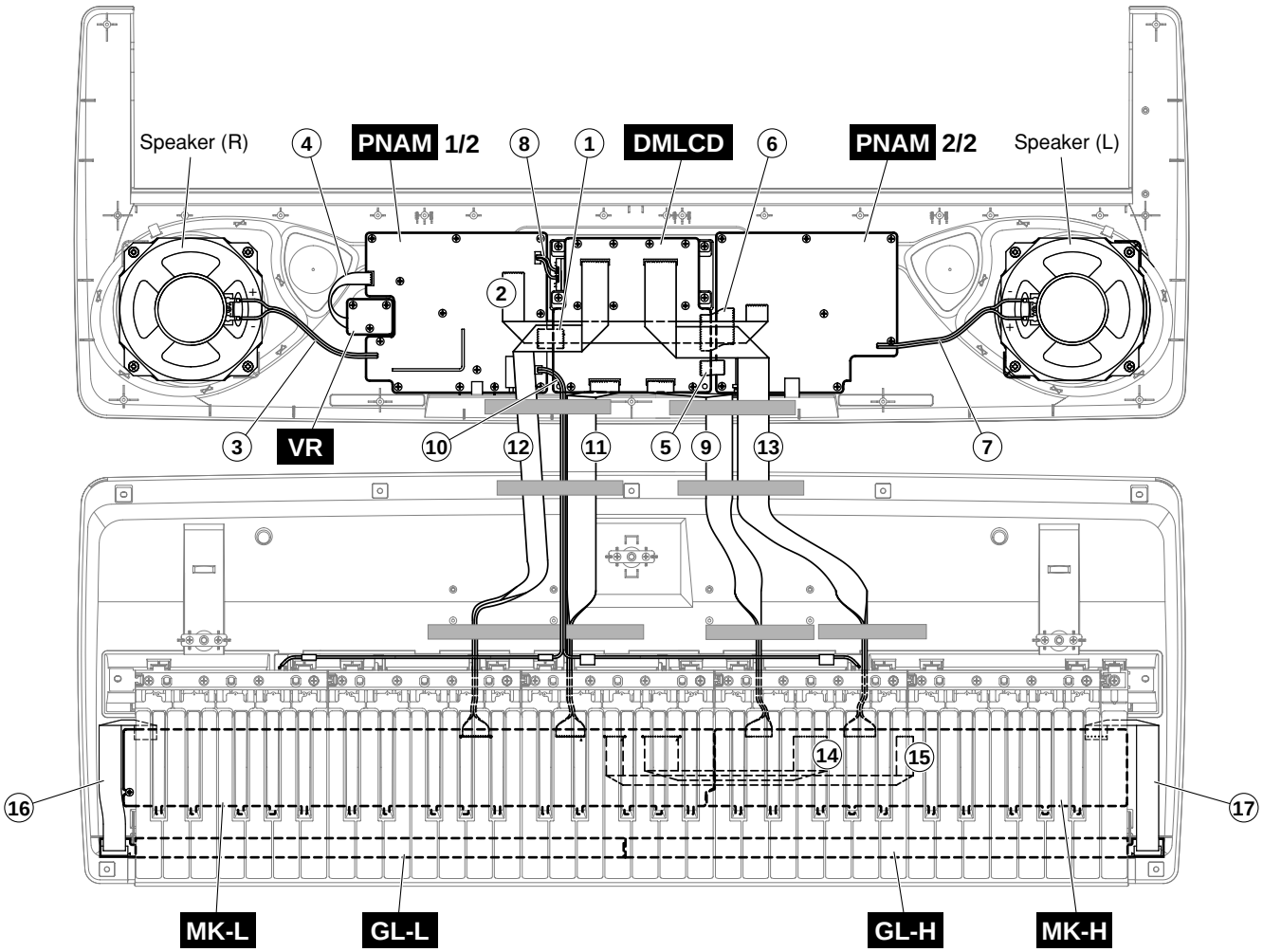

No.	REF. No.	CONNECTOR ASSEMBLY	DESTINATION						REMARKS	
①	WH102	PNAM1	PNAM 1/2-CN102	*1	*3	DMLCD-CN1	*2	*3	10P	(WB02440)
②	WH103	PNAM2	PNAM 1/2-CN103	*1	*3	PNAM 2/2-CN202	*1	*3	9P	(WB02450)
③	WH104	SP	PNAM 1/2-CN104	*1	*4	Speaker L	*5	*6	2P	(WB06490)
④	WH106	VR	VR-CN106	*1	*3	PNAM 1/2-CN105	*2	*3	5P	(V719680)
⑤	WH201	USB	PNAM 2/2-CN201	*1	*3	DMLCD-CN5	*2	*3	5P	(WB02530)
⑥	WH203	PNAM3	PNAM 2/2-CN203	*1	*3	DMLCD-CN4	*2	*3	15P	(WB02470)
⑦	WH204	SP	PNAM 2/2-CN204	*1	*4	Speaker R	*5	*6	2P	(WB06490)
⑧	70	LED	PNAM 1/2-CN110	*2	*4	Back Light Assembly	*5	*6	2P	(V781490)
⑨	L120	MK-H	MK-H-CN2	*2	*3	DMLCD-CN7	*2	*3	11P	(V781580)
⑩	L130	BATTRY	PNAM 1/2-CN101	*2	*4	Battery Contact Spring + Contact Spreng -	*5	Red Black	2P	(V718670)
⑪	L150	MK-L	MK-L-CN5	*2	*3	DMLCD-CN8	*2	*3	12P	(V781590)
⑫	L160	GL-L	MK-L-CN3	*2	*3	DMLCD-CN2	*2	*3	11P	(V781560)
⑬	L170	GL-H	MK-H-CN5	*2	*3	DMLCD-CN3	*2	*3	13P	(V781570)
⑭	150c	MK-S	MK-L-CN2	*2	*3	MK-H-CN4	*2	*3	14P	(V776140)
⑮	150d	MK-L	MK-L-CN1	*2	*3	MK-H-CN1	*2	*3	7P	(V784060)
⑯	CN1	GL	MK-L-CN4	*2	*3	GL-L-CN1	*1	*3	12P	(V775730)
⑰	CN1	GL	MK-H-CN6	*2	*3	GL-H-CN1	*1	*3	12P	(V775730)

• DIRECTION

*1: Dip soldering
*2: Installation
*3: Edge mark is adjusted to Pin 1 mark. (▲ mark)
*4: Red wire is adjusted to Pin 1 mark. (▲ mark)
*5: Manual Soldering
*6: Red wire is connected the (+) Aerminal.

■ BLOCK DIAGRAM

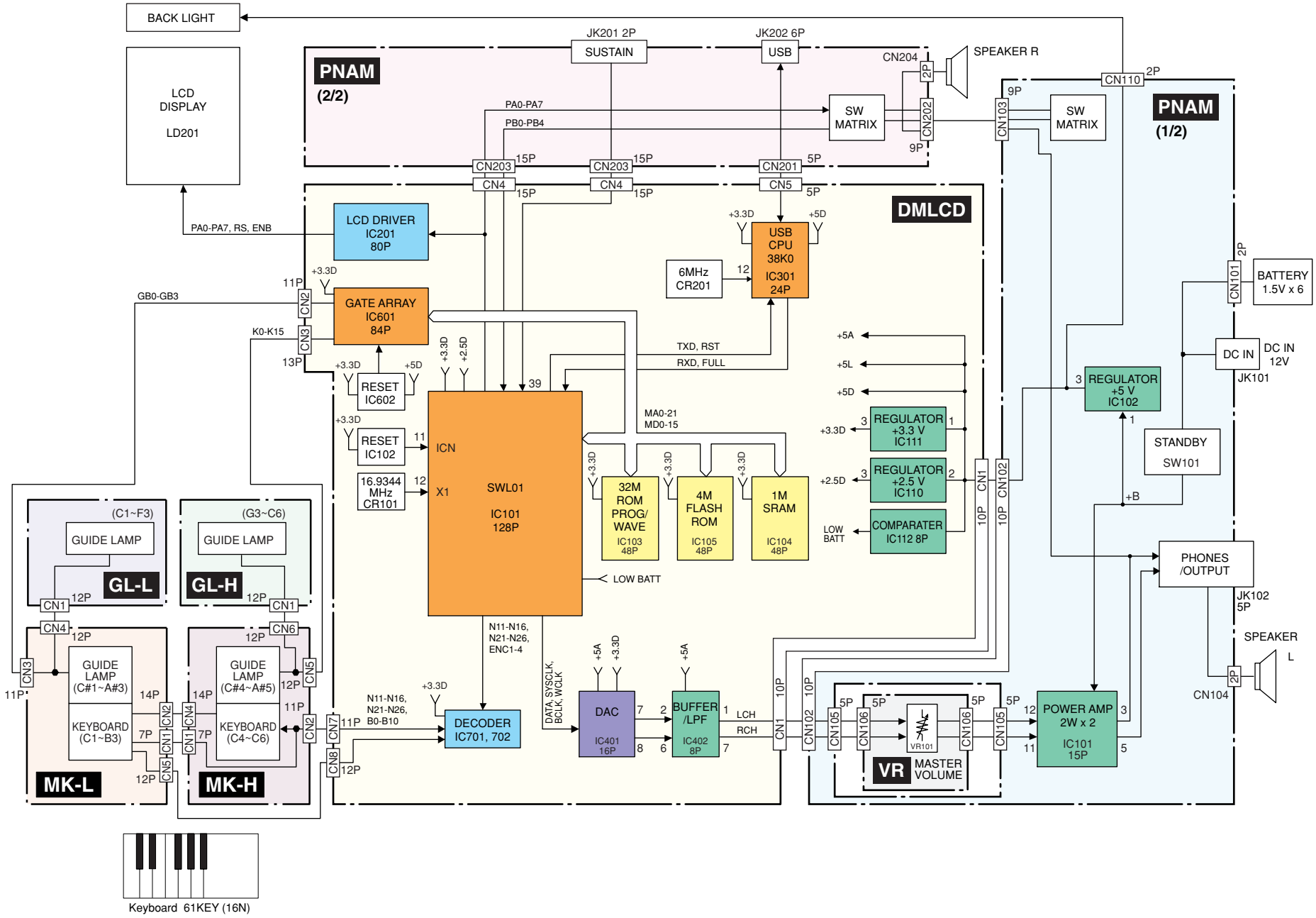

28CA1-8828364

■ DISASSEMBLY PROCEDURE

1. Lower Case Assembly
(Time Required: about 2 min)

1-1 Remove the battery cover assembly. (Fig. 1)
1-2 Remove the seven (7) screws marked [260] and the five (5) screws marked [270]. The lower case assembly can then be removed. (Fig. 1)

Caution: Be sure to attach the removed filament tape just as it was before removal.

2. Removing the Spring Terminal (+),(—) and Spring Terminal

A. Spring Terminal (+) and (-)

2-1 Remove the lower case assembly. (See procedure 1.)
2-2 Remove the battery harness soldered to the spring terminal (+) and (–). (Fig. 2)
2-3 Remove the hooks (two at each place) and pull out the spring terminal (+) and (–). (Fig. 2-1)(Fig. 2-2)

B. Spring Terminal

2-1 Remove the lower case assembly. (See procedure 1.)
2-2 Remove spring terminal hooks (two at each place) and pull out the spring terminal. (Fig. 2-1)

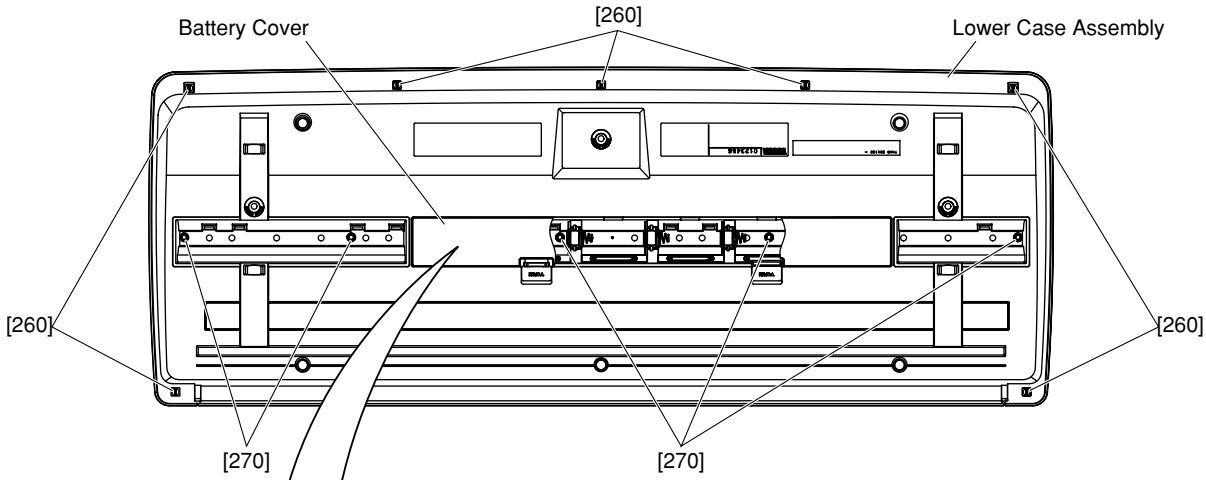

[260]: Bind Head Tapping Screw-B 3.0x12 MFZN2Y (VE683000)
[270]: Bind Head Tapping Screw-B 3.0x30 MFZN2Y (V7213700)

(Fig. 1)

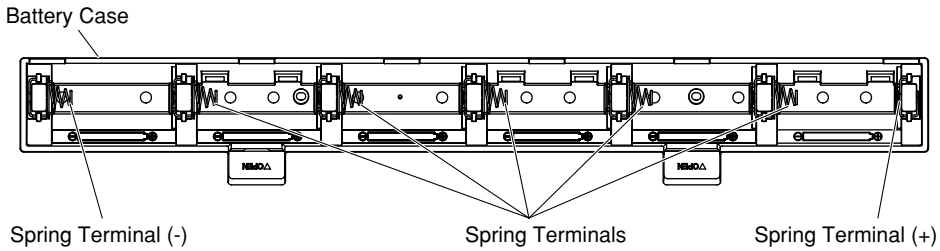

(Fig. 2)

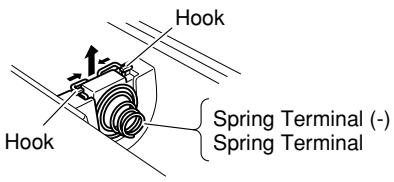

(Fig. 2-1)

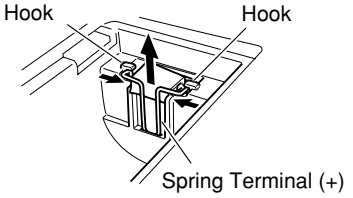

(Fig. 2-2)

3. Speakers (Time Required: about 3 min)

3-1 Remove the lower case assembly. (See procedure 1.)
3-2 Remove the four (4) screws marked [280]. The speaker can then be removed. (Fig. 3)
* The right and left speaker can be removed in the same manner.

4. PNAM 1/2 Circuit Board
(Time Required: about 3 min)

4-1 Remove the lower case assembly. (See procedure 1.)
4-2 Remove the twelve (12) screws marked [250a]. The PNAM 1/2 circuit board can then be removed. (Fig. 3)

5. PNAM 2/2 Circuit Board
(Time Required: about 3 min)

5-1 Remove the lower case assembly. (See procedure 1.)
5-2 Remove the eight (8) screws marked [250b]. The PNAM 2/2 circuit board can then be removed. (Fig. 3)

6. VR Circuit Board
(Time Required: about 3 min)

6-1 Remove the lower case assembly. (See procedure 1.)
6-2 Remove the MASTER VOLUME knob on the control panel.
6-3 Remove the three (3) screws marked [250c]. The VR circuit board can then be removed. (Fig. 3)

7. LCD Unit & DMLCD Circuit Board
(Time Required: about 5 min)

7-1 Remove the lower case assembly. (See procedure 1.)
7-2 Remove the six (6) screws marked [250d]. The LCD unit can then be removed. (Fig. 3)
7-3 Remove the eight (8) screws marked [250e]. The DMLCD circuit board can then be removed. (Fig. 3)
* When re-attaching the DMLCD circuit board to the LCD unit, fasten it with screws in sequence from 1 to 8. (Fig. 3-1)

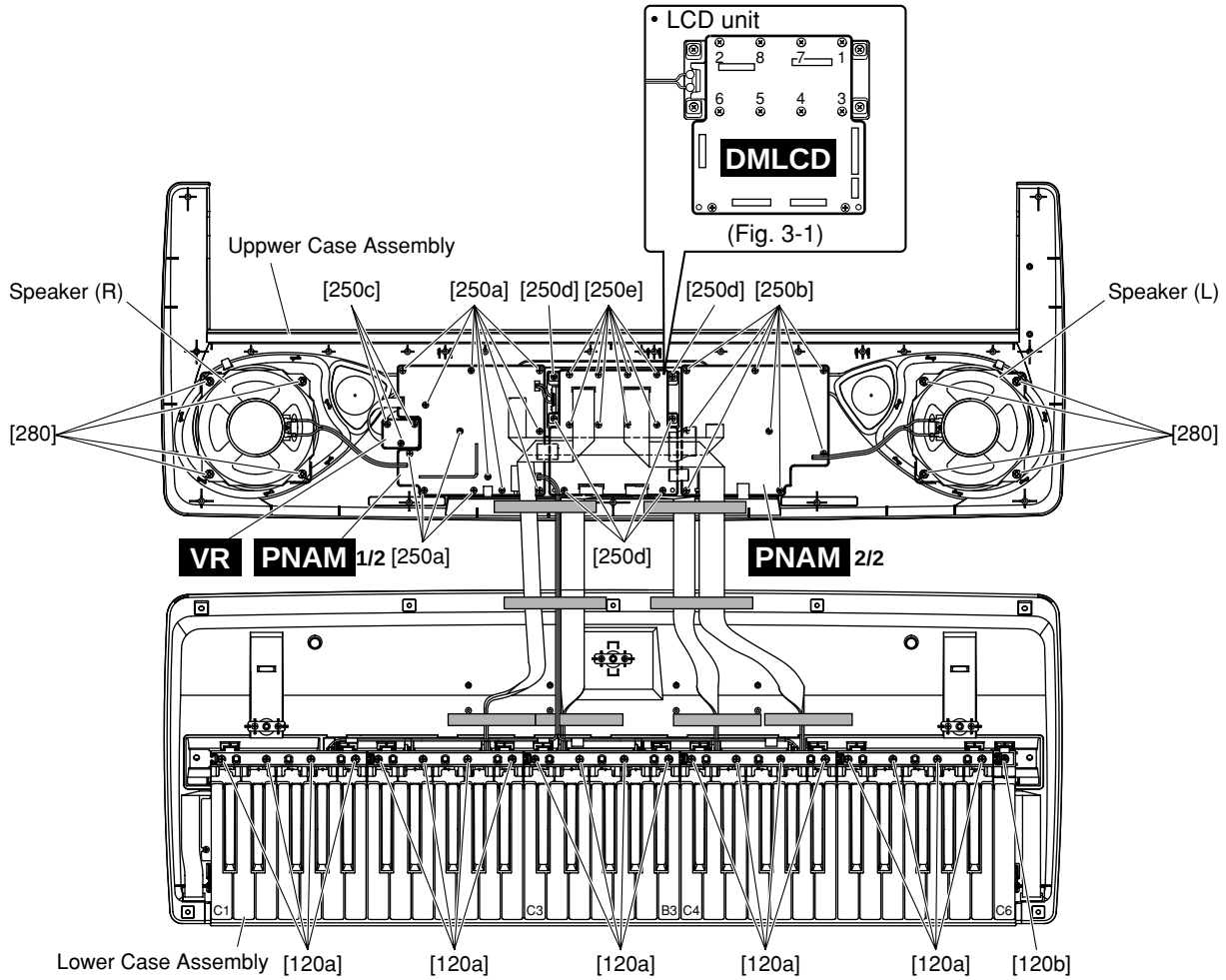

[120]: Bind Head Tapping Screw-P 3.0x20 MFZN2 (VT069800)
[250]: Bind Head Tapping Screw-B 3.0x8 MFZN2Y (EP600250)
[280]: Bind Head Tapping Screw-B 4.0x8 MFZN2Y (EP640410)
(Fig. 3)

8. Keybaord Assembly

8-1 Remove the lower case assembly. (See procedure 1.)
8-2 The black and white keys are arranged as a set of one octave unit from the left side. There are 5 sets in total. Remove the four (4) screws marked [120a]. Then, remove the keyboard assembly. (Fig.3) At this time, note that there are two (2) hooks behind the black keys. (Photo. 1)
Push the hooks in and slightly lift. Slide the keyboard assembly towards you to unhook it, and then, lift it.
7-3 To remove the C6 white key, remove the screw marked [120b], push the hook in behind the key, slightly lift it, slide it towards you to unhook, and then lift it. (Fig. 3)

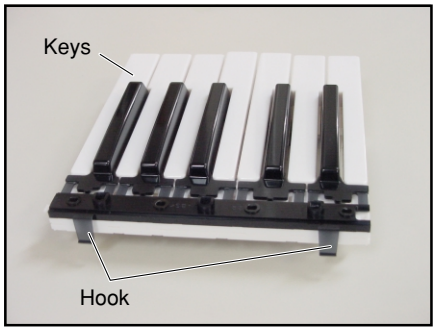

(Photo. 1)

9. MK-L Circuit Board (Time Required: about 5 min)

9-1 Remove the lower case assembly. (See procedure 1.)
9-2 Remove the keys C1 to B3. (See procedure 8.)
9-3 Remove the four (4) screws marked [100a] and the eight (8) screws marked [110a]. The MK-L circuit board can then be removed. (Fig. 4)

10. MK-H Circuit Board (Time Required: about 5 min)

10-1 Remove the lower case assembly. (See procedure 1.)
10-2 Remove the keys C4 to C6. (See procedure 8.)
10-3 Remove the three (3) screws marked [100b] and the five (5) screws marked [110b]. The MK-H circuit board can then be removed. (Fig. 4)

11. GL-L Circuit Board (Time Required: about 5 min)

11-1 Remove the lower case assembly. (See procedure 1.)
11-2 Remove the keys C1 to B3. (See procedure 8.)
11-3 Remove the four (4) screws marked [100c]. The GL-L circuit board can then be removed. (Fig. 4)

12. GL-H Circuit Board (Time Required: about 5 min)

12-1 Remove the lower case assembly. (See procedure 1.)
12-2 Remove the keys C3 to C6. (See procedure 8.)
12-3 Remove the five (5) screws marked [100d]. The GL-H circuit board can then be removed. (Fig. 4)

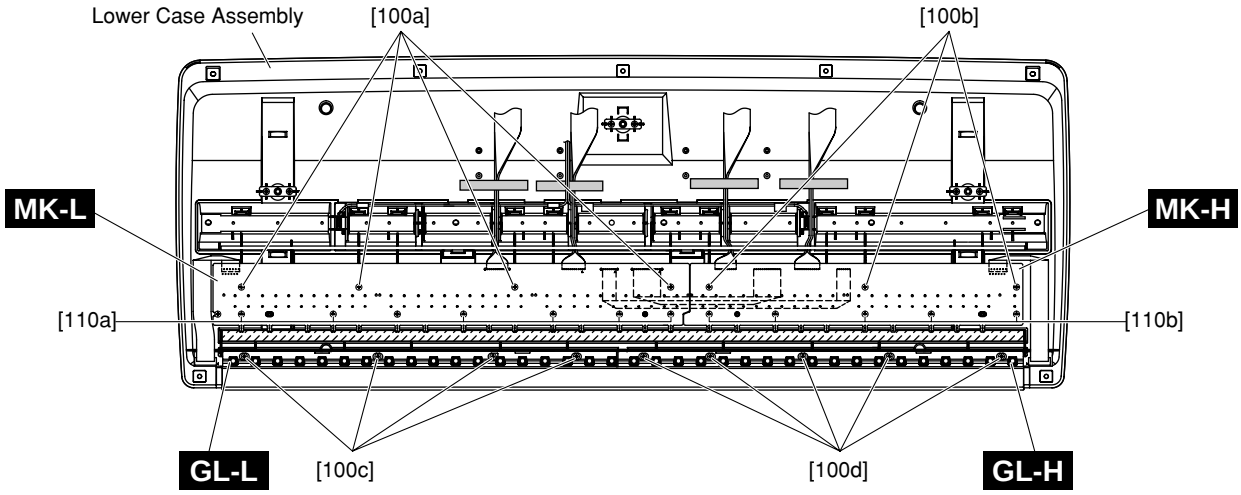

[100]: Bind Head Tapping Screw-B 3.0x8 MFZN2BL (EP600190)
[110]: Bind Head Tapping Screw-P SP 3.0x12 MFZNBL (VZ313100)
(Fig. 4)

13. Rubber Contact

13-1 Remove the lower case assembly. (See procedure 1.)
13-2 Remove the keyboard assembly corresponding to the rubber contact to remove. (See procedure 8.)
13-3 Remove the rubber contact. (Photo. 2)

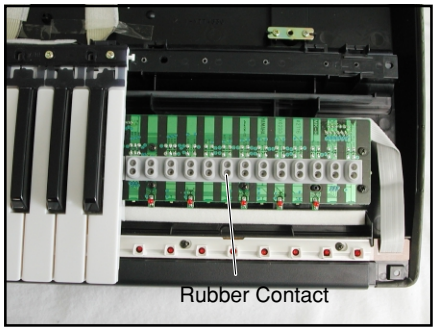

(Photo. 2)

■ LSI PIN DESCRIPTION

• YMW767-V (X3271A00) CPU & XG Lite Generator

DMLCD: IC101

PIN No.	NAME	I/O	FUNCTION	PIN No.	NAME	I/O	FUNCTION
1	VSS	-	Ground	65	VSS	-	Ground
2	TESTN	-	TEST Input (connect to a IOVDD)	66	IOVDD	-	Power Supply (+3.3V)
3	PLLBPN	-	PLL Bypass Select	67	LBN/LWRN/PF6	O	Memory Low Byte Enable
4	PLLVDD	-	Power Supply for PLL	68	UBN/UWRN/PF7	O	Memory Upper Byte Enable
5	CIN	-	Capacitor Connect Terminal for PLL	69	RDN/PF4	O	Memory Read Enable
6	PLLVSS	-	Ground for PLL	70	MD00	I/O	Memory Data Bus 0
7	TRSTN	I	JTAG Input	71	MD08	I/O	Memory Data Bus 8
8	TMS	I		72	MD01	I/O	Memory Data Bus 1
9	TCK	I		73	MD09	I/O	Memory Data Bus 9
10	TDI	I		74	MD02	I/O	Memory Data Bus 2
11	TDO	O	JTAG Output	75	MD10	I/O	Memory Data Bus 10
12	XI	I	Quartz Cristal Input	76	MD03	I/O	Memory Data Bus 3
13	XO	O	Quartz Cristal Output	77	VSS	-	Ground
14	VSS	-	Ground	78	MD11	I/O	Memory Data Bus 11
15	VDD	-	Power Supply (+2.5V)	79	MD04	I/O	Memory Data Bus 4
16	ICN	-	Hardware Reset	80	MD12	I/O	Memory Data Bus 12
17	ECSN	-	CPU I/F Chip Select	81	MD05	I/O	Memory Data Bus 5
18	EWRN/PD5	-	CPU I/F Write Enable	82	MD13	I/O	Memory Data Bus 13
19	ERDN/PD4	-	CPU I/F Read Enable	83	MD06	I/O	Memory Data Bus 6
20	EA3/PD3	I	CPU I/F Address Bus 3	84	MD14	I/O	Memory Data Bus 14
21	EA2/PD2	I	CPU I/F Address Bus 2	85	MD07	I/O	Memory Data Bus 7
22	EA1/PD1	I	CPU I/F Address Bus 1	86	MD15	I/O	Memory Data Bus 15
23	EA0/PD0	I	CPU I/F Address Bus 0	87	WRN/PF5	O	Memory Write Enable
24	IOVDD	-	Power Supply (+3.3V)	88	VSS	-	Ground
25	ED0/PC0	I/O	CPU I/F Data Bus 0	89	VDD	-	Power Supply (+2.5V)
26	ED1/PC1	I/O	CPU I/F Data Bus 1	90	IOVDD	-	Power Supply (+3.3V)
27	ED2/PC2	I/O	CPU I/F Data Bus 2	91	MA17	O	Memory Address Bus 17
28	ED3/PC3	I/O	CPU I/F Data Bus 3	92	MA16	O	Memory Address Bus 16
29	ED4/PC4	I/O	CPU I/F Data Bus 4	93	MA15	O	Memory Address Bus 15
30	ED5/PC5	I/O	CPU I/F Data Bus 5	94	MA14	O	Memory Address Bus 14
31	ED6/PC6	I/O	CPU I/F Data Bus 6	95	MA13	O	Memory Address Bus 13
32	ED7/PC7	I/O	CPU I/F Data Bus 7	96	MA12	O	Memory Address Bus 12
33	VSS	-	Ground	97	MA11	O	Memory Address Bus 11
34	IRQ0N/PH0	I	Interrupt Input	98	MA10	O	Memory Address Bus 10
35	TxD0	O	Serial Output 0	99	MA09	O	Memory Address Bus 9
36	RxD0	I	Serial Input 0	100	MA08	O	Memory Address Bus 8
37	TxD1/PG2	O	Serial Output 1	101	MA07	O	Memory Address Bus 7
38	RxD1/PH1	I	Serial Input 1	102	MA06	O	Memory Address Bus 6
39	SCLK1/PH2	I	Sync Clock Input	103	MA05	O	Memory Address Bus 5
40	SD0	O	Serial Output	104	VSS	-	Ground
41	SDI/PH3	I	Serial Input	105	MA04	O	Memory Address Bus 4
42	BCLK	O	Bit Clock Output	106	MA03	O	Memory Address Bus 3
43	WCLK/SY0	O	Word Clock Output	107	MA02	O	Memory Address Bus 2
44	SYSCLK/PG3	O	Clock Output	108	MA01	O	Memory Address Bus 1
45	VSS	-	Ground	109	CS0N/PG0	O	Memory Chip Select 0
46	VDD	-	Power Supply (+2.5V)	110	MA18	O	Memory Address Bus 18
47	IOVDD	-	Power Supply (+3.3V)	111	MA19	O	Memory Address Bus 19
48	PA0	I/O	I/O Port	112	MA21/PF1	O	Memory Address Bus 21
49	PA1	I/O		113	MA22/PF2	O	Memory Address Bus 22
50	PA2	I/O		114	MA20	O	Memory Address Bus 20
51	PA3	I/O		115	MA23/PF3	O	Memory Address Bus 23
52	PA4	I/O		116	CS1N/PG1	O	Memory Chip Select 1
53	PA5	I/O		117	MA00/PF0	O	Memory Address Bus 0
54	PA6	I/O		118	VSS	-	Ground
55	PA7	I/O		119	VDD	-	Power Supply (+2.5V)
56	VSS	-	Ground	120	IOVDD	-	Power Supply (+3.3V)
57	PB0	I/O	I/O Port	121	CS2N/PE0	O	Memory Chip Select 2
58	PB1	I/O		122	CS3N/PE1	O	Memory Chip Select 3
59	PB2	I/O		123	CS4N/CASN/PE2	O	Memory Chip Select 4
60	PB3	I/O		124	CS5N/PE3	O	Memory Chip Select 5
61	PB4	I/O		125	CS50RDN/PE4	O	Memory Read Enable
62	PB5	I/O		126	CS51WRN/PE5	O	Memory Write Enable
63	PB6	I/O		127	CS52WRN/PE6	O	
64	PB7/SYI	I/O		128	CS53WRN/RASN/PE7	O	

• ML9040A-B01GA (XZ987A00) LCD DRIVER

DMLCD: IC201

PIN No.	NAME	I/O	FUNCTION	PIN No.	NAME	I/O	FUNCTION
1	S22	O	Segment signal output for LCD driving	41	DB2	I/O	Data interface
2	S21	O		42	DB3	I/O	
3	S20	O		43	DB4	I/O	
4	S19	O		44	DB5	I/O	
5	S18	O		45	DB6	I/O	
6	S17	O		46	DB7	I/O	
7	S16	O		47	C1	O	Common signal output for LCD driving
8	S15	O		48	C2	O	
9	S14	O		49	C3	O	
10	S13	O		50	C4	O	
11	S12	O		51	C5	O	
12	S11	O		52	C6	O	
13	S10	O		53	C7	O	
14	S9	O		54	C8	O	
15	S8	O		55	C9	O	
16	S7	O		56	C10	O	
17	S6	O		57	C11	O	
18	S5	O		58	C12	O	
19	S4	O		59	C13	O	
20	S3	O		60	C14	O	
21	S2	O		61	C15	O	
22	S1	O		62	C16	O	
23	Vss		Ground	63	S40	O	Segment signal output for LCD driving
24	OSC1	I	Oscillator	64	S39	O	
25	OSC2	O	Oscillator	65	S38	O	
26	V1		Power Supply	66	S37	O	
27	V2			67	S36	O	
28	V3			68	S35	O	
29	V4			69	S34	O	
30	V5			70	S33	O	
31	CLK1	O	Data latch clock	71	S32	O	
32	CLK2	O	Data shift Cokel	72	S31	O	
33	Vdd		Power supply (+5V)	73	S30	O	
34	M	O	Altamated signal for LCD driver output	74	S29	O	
35	D	O	Display data interface	75	S28	O	
36	RS	I		76	S27	O	
37	R/W	I	Read/write	77	S26	O	
38	E	I	Enable	78	S25	O	
39	DB0	I/O	Data interface	79	S24	O	
40	DB1	I/O	Data interface	80	S23	O	

• M38K07M4L-303HP (X3921200) USB CPU

DMLCD: IC301

PIN No.	NAME	I/O	FUNCTION	PIN No.	NAME	I/O	FUNCTION
1	P12/DQ2/AN2	I/O	Port P1	33	P26	I/O	Port P2
2	P13/DQ3/AN3	I/O		34	P27	I/O	
3	P14/DQ4/AN4	I/O		35	P50/INT0	I/O	Port P5
4	P15/DQ5/AN5	I/O		36	P51/CNTR0	I/O	
5	P16/DQ6/AN6	I/O		37	P52/IN1	I/O	
6	P17/DQ7/AN7	I/O		38	P53	I/O	
7	CNVSS	-	Chip Mode Control Terminal	39	P54	I/O	
8	/RESET	I	Reset	40	P55	I/O	
9	VCCE	-	Analog Power Supply	41	P56	I/O	
10	VREF	I	Standard Voltage Input	42	P57	I/O	
11	VSS	-	Ground	43	P00	I/O	Port P0
12	XIN	I	Clock Input	44	P01	I/O	
13	XOUT	O	Clock Output	45	P02	I/O	
14	VCC	-	Analog Power Supply (+3.0 - 5.25V)	46	P03	I/O	
15	CNVSS2	-	Chip Mode Control Terminal	47	P04	I/O	
16	P60(LED0)	I/O	Port P6	48	P05	I/O	
17	P61(LED1)	I/O		49	P06	I/O	
18	P62(LED2)	I/O		50	P07	I/O	
19	P63(LED3)	I/O		51	P40/EXDREQ/RXD	I/O	Port P4
20	PVSS	-	Analog Ground	52	P41/EXDACK/TXD	I/O	
21	PVCC	-	Analog Power Supply	53	P42/EXTC/SCLK	I/O	
22	DVCC	-	Analog Power Supply (+3.0 - 5.25V)	54	P43/EXA1/SRDY	I/O	
23	USBREF	-	USB Port Standard Power Supply	55	P30	I/O	Port P3
24	TrON	O	USB Standard Voltage Output	56	P31	I/O	
25	D0+	I/O	USB Standard Voltage Upstreem	57	P32	I/O	
26	D0-	I/O	USB Standard Voltage Upstreem	58	P33/EXINT	I/O	
27	P20	I/O	Port P2	59	P34/EXCS	I/O	
28	P21	I/O		60	P35/EXWR	I/O	
29	P22	I/O		61	P36/EXRD	I/O	
30	P23	I/O		62	P37/EXAO	I/O	
31	P24	I/O		63	P10/DQ0/AN0	I/O	Port P1
32	P25	I/O		64	P11/DQ1/AN1	I/O	

• D402117Q (XW159A00) GATE ARRAY

DMLCD: IC601

PIN No.	NAME	I/O	FUNCTION	PIN No.	NAME	I/O	FUNCTION
1	DB0	I/O	Two way input/output (Powered)	33	SB1	O	Output
2	DB1	I/O		34	SB2	O	
3	DB2	I/O		35	SB3	O	
4	DB3	I/O		36	VSS11		GND
5	VSS4		GND	37	GB0	O	Output (Open drain)
6	DB4	I/O	Two way input/output (Powered)	38	VSS12		GND
7	DB5	I/O		39	GB1	O	Output (Open drain)
8	DB6	I/O		40	VSS13		GND
9	DB7	I/O		41	GB2	O	Output (Open drain)
10	VSS0		GND	42	VSS2		GND
11	WRH	I	CMOS input (Schmitt trigger, Non-inverted)	43	GB3	O	Output (Open drain)
12	VSS5		GND	44	VSS14		GND
13	WRL	I	CMOS input (Schmitt trigger, Non-inverted)	45	GN0	O	Output
14	VSS6		GND	46	GN1	O	
15	WRB	I	CMOS input (Schmitt trigger, Non-inverted)	47	GN2	O	
16	VSS7		GND	48	GN3	O	
17	RDN	I	CMOS input (Schmitt trigger, Non-inverted)	49	GN4	O	
18	VSS8		GND	50	GN5	O	
19	RESET	I	CMOS input (Schmitt trigger, Non-inverted)	51	VSS15		GND
20	VSS9		GND	52	GN6	O	Output
21	SN0	I	CMOS input (Schmitt trigger, Non-inverted)	53	GN7	O	
22	SN1	I		54	GN8	O	
23	SN2	I		55	GN9	O	
24	SN3	I		56	GN10	O	
25	VSS1		GND	57	VSS3		GND
26	VDD0		Power supply	58	VDD1		Power supply
27	SN4	I	CMOS input (Schmitt trigger, Non-inverted)	59	GN11	O	Output
28	SN5	I		60	GN12	O	
29	SN6	I		61	GN13	O	
30	SN7	I		62	GN14	O	
31	VSS10		GND	63	GN15	O	
32	SB0	O	Output	64	VSS16		GND

■ IC BLOCK DIAGRAM

● **UPC4572G2-T1** (XF634A00)
Dual Operational Amplifier

DMLCD: IC402

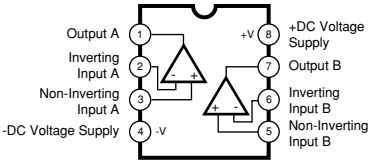

● **PCM1724KE/2K** (X3538A00)
DAC

DMLCD: IC401

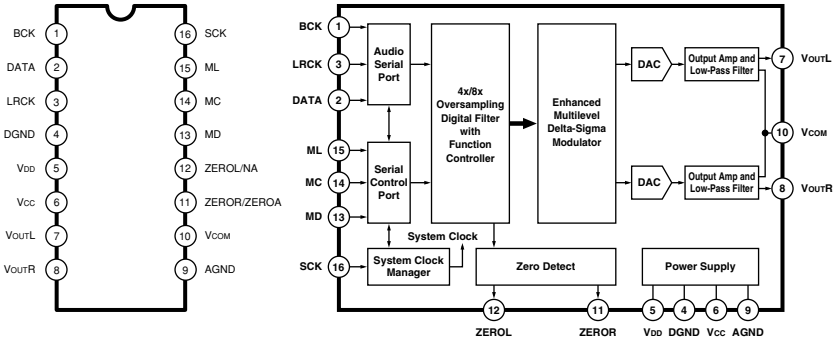

● **M5233P** (XI577A00)
Comparator

DMLCD: IC112

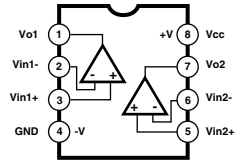

● **BA5417** (XV771A00)
Power AMP

AM: IC101

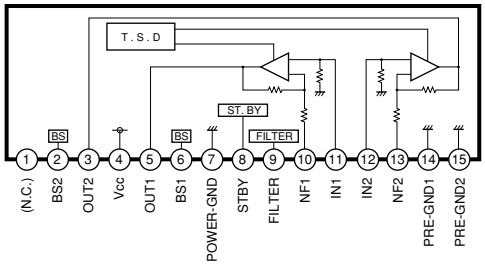

● **SN74LV138ANSR** (IS013810)
DECODER

DMLCD: IC603, 701, 702

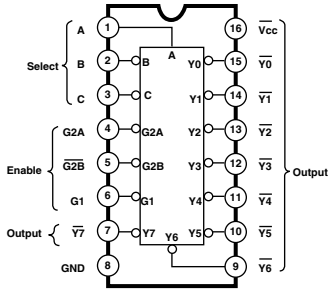

ENABLE INPUTS			SELECT INPUTS			OUTPUTS						
G1	G2A	G2B	C	B	A	Y0	Y1	Y2	Y3	Y4	Y5	Y6	Y7
X	H	X	X	X	X	H	H	H	H	H	H	H	H
X	X	H	X	X	X	H	H	H	H	H	H	H	H
L	X	X	X	X	X	H	H	H	H	H	H	H	H
H	L	L	L	L	L	L	H	H	H	H	H	H	H
H	L	L	L	L	H	H	L	H	H	H	H	H	H
H	L	L	L	H	L	H	H	L	H	H	H	H	H
H	L	L	L	H	H	H	H	H	L	H	H	H	H
H	L	L	H	L	L	H	H	H	H	L	H	H	H
H	L	L	H	L	H	H	H	H	H	H	L	H	H
H	L	L	H	H	L	H	H	H	H	H	H	L	H
H	L	L	H	H	H	H	H	H	H	H	H	H	L

■ CIRCUIT BOARDS

CONTENTS

DMLCD Circuit Board (X3889C0) ..... 15, 16 page
VR Circuit Board (X3891C0) ..... 17 page
PNAM1/2 Circuit Board (X3891C0) ..... 17 page
PNAM2/2 Circuit Board (X3891C0) ..... 18 page

• DMLCD Circuit Board

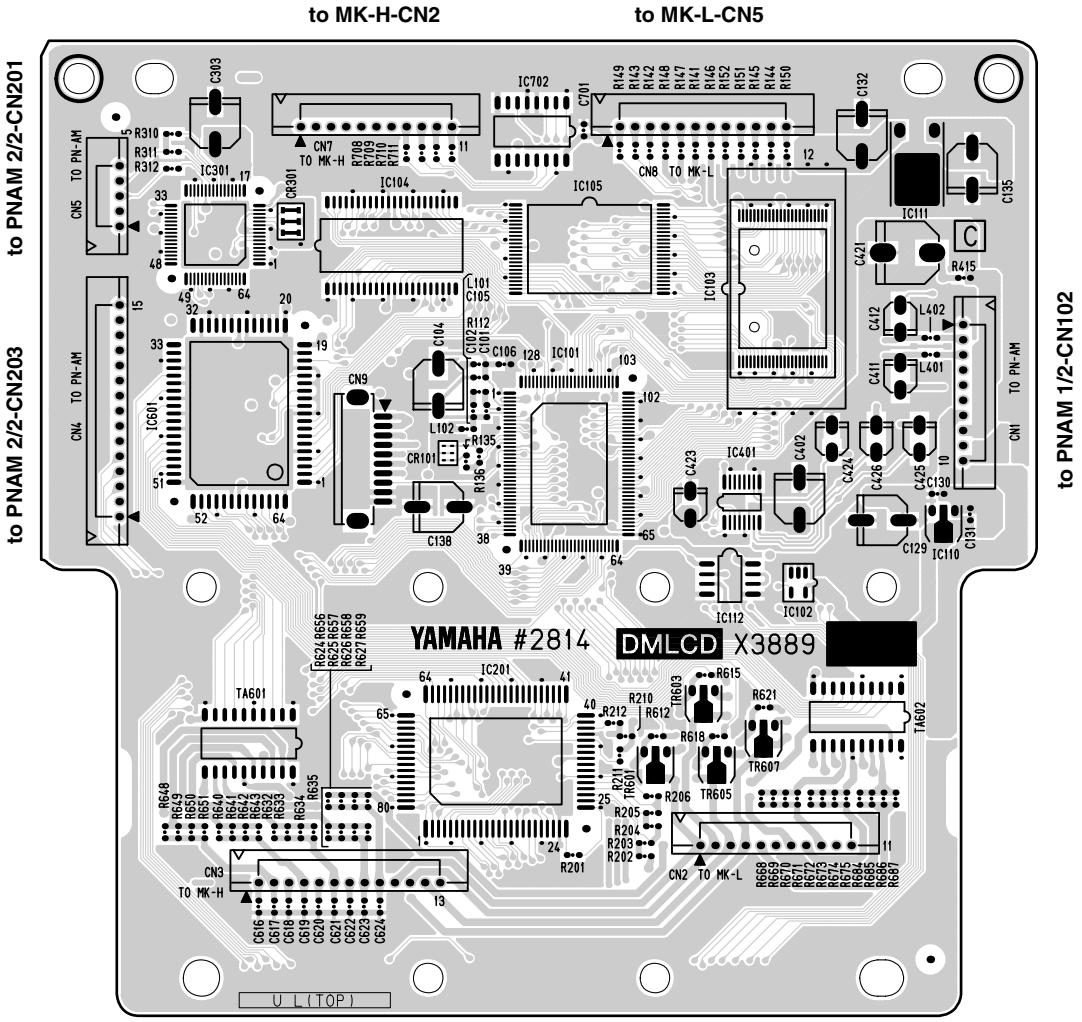

Component side

• CR101 and CR301 installation is shown as the follwing figure.

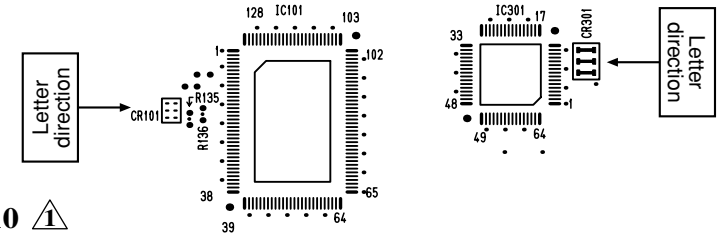

DMLCD: 2NA-WA69810 ⚠1

• DMLCD Circuit Board

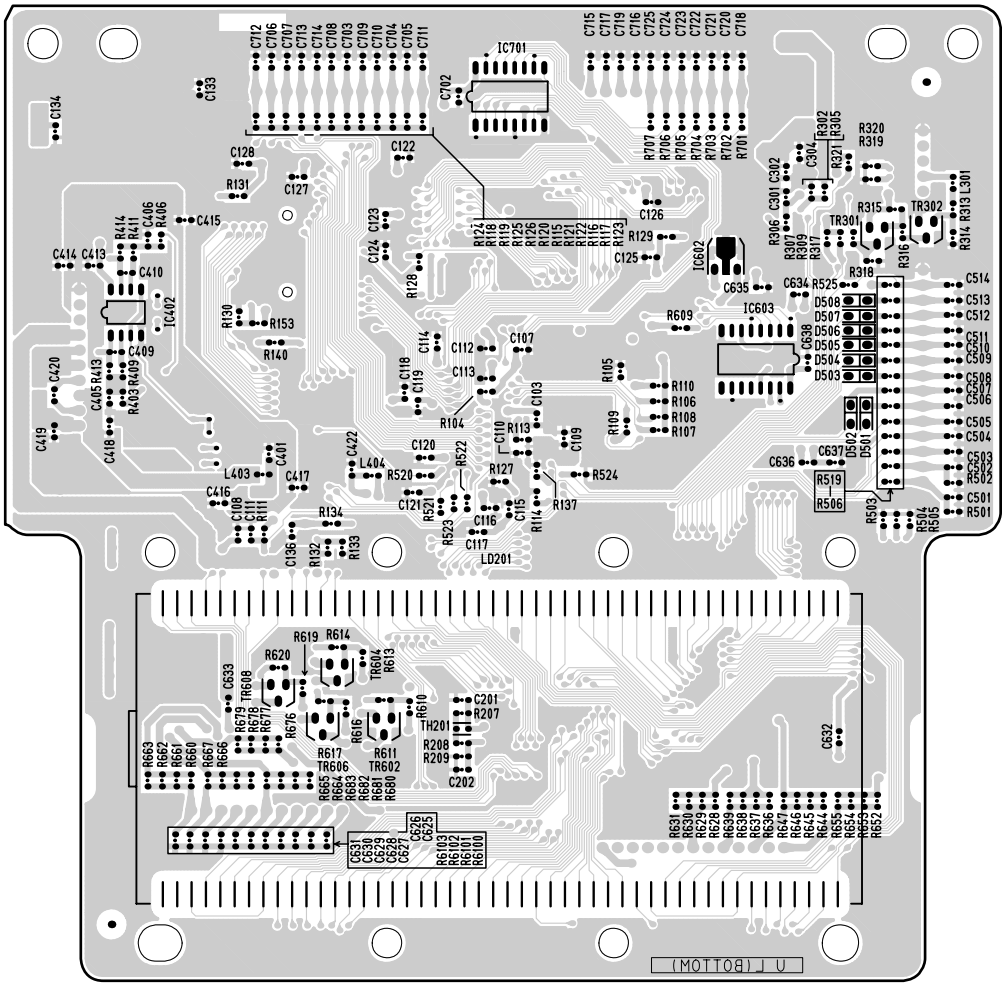

Pattern side

DMLCD: 2NA-WA69810 ⚠1

• PNAM 1/2 Circuit Board

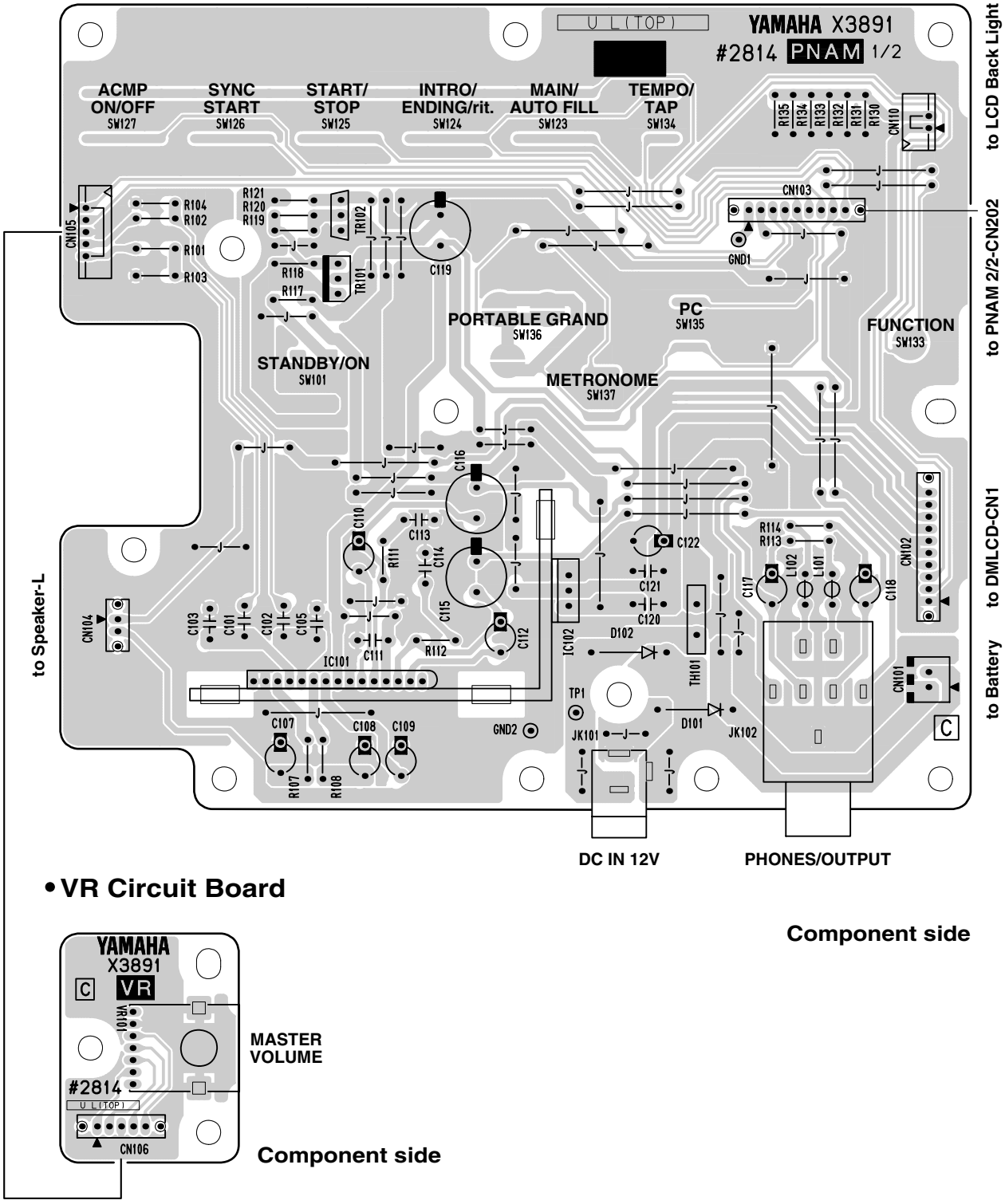

• VR Circuit Board

PNAM1/2: 2NA-WA69890 ⚠1
VR: 2NA-WA69890 ⚠1

• PNAM 2/2 Circuit Board

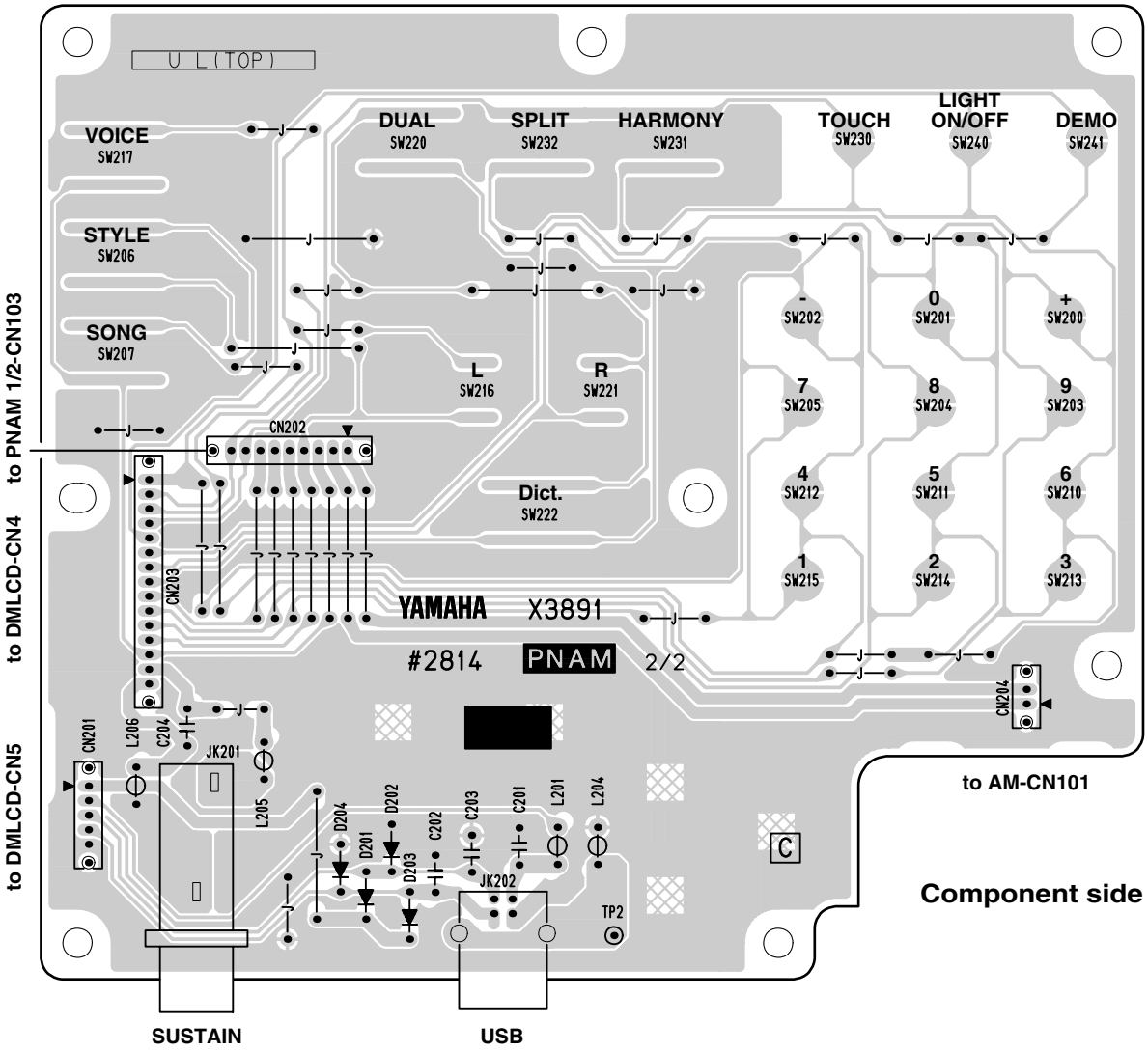

PNAM1/2: 2NA-WA69890 ⚠1

■ TEST PROGRAM

A. PREPARATION

1) Use PA-3C (or PA-31) AC adaptor.
2) Set the volume to any level unless otherwise specified.
3) Measuring instruments: a frequency counter and a level meter (with a JIS-C filter)
   Note: Use a stereo plug and connect the 33 ohm load to the [PHONES / OUTPUT] jack.
4) Jigs: Foot switch (FC-4 of FC-5), USB cabel, PC

B. HOW TO ENTER THE TEST PROGRAM

While pressing the C2#, F2 and G2# keys, turn on the [STAND BY / ON] switch.

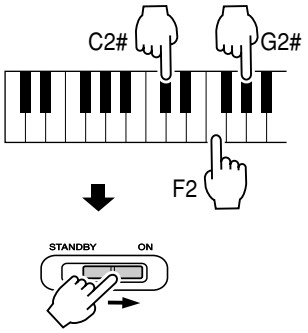

C. PROCEEDING THROUGH THE TEST PROGRAM

1) When the test program is started, "TEST" appears on the LCD.
2) Select the test program item to be executed by pressing the [-/NO] or [+/YES] button.
3) Press the [START / STOP] button to execute testing.

- When the test result is OK, press the [START/STOP] button to return to the test item number. Press the [-/OFF] or [+/ON] button on the numeric keypad to proceed to the next test.
  When the test result is OK and the [START/STOP] button is pressed to return to the test item nuber, "_" is added adiacent to the first character of the test item number.
- When the test result is NG, press the leftmost white key to return to the test item number.

D. TEST PROGRAM LIST

No.	LCD display	**Test Function and Judgment Criteria**
1	001 Version	Displays ROM version ROM (program) version is displayed on the LCD.
2	002 Rom Chk1	Checks the ROMs The test result appears on the LCD.
3	003 Ram Chk1	Checks all the RAM The test result appears on the LCD.
4	006 FRomChk1	Checks the FLASH ROM The test result appears on the LCD.
5	011 TG1 Chk	Outputs the sine wave by changing the channels in sequence from C2 to D3#. Neither abnormal sound nor noise is allowed. After auto-scaling is finished, individual keys can be played. (If playing two or more keys simulataneously, the first pressed key has priority to make a sound.)
6	013 Pit Chk	Connect the frequency counter to the [PHONES / OUTPUT] jack. Check that the 440 Hz +/- 1.76 Hz signal is output.
7	014 Output R	Connect the level meter to the [PHONES / OUTPUT] jack. Set the [MASTER VOLUME] at maximum. Check the output level (1kHz). Phones L: less than -60.0 dBm Phones R: -5.5 dBm +/-2 dB
8	015 Output L	Connect the level meter to the [PHONES / OUTPUT] jack. Set the [MASTER VOLUME] at maximum. Check the output level (1kHz). Phones L: -5.5 dBm +/-2 dB Phones R: less than -60.0 dBm

No.	LCD display	Test Function and Judgment Criteria
9	019 Noise	Connect the level meter to the [PHONES / OUTPUT] jack. Set the [MASTER VOLUME] at maximum. PHONES R/L: less than -75.0 dBm
10	020 SW Chk	Check switches on panel. Press the switches in order according to the display on the LCD (See below). Pressing the switch produces a specified sound. When the last switch is pressed, "SW OK" appears on the LCD. If the test is canceled half way press the lowest (leftmost) key on the keyboard.

No.	Display	SW Name	Note No.	No.	Display	SW Name	Note No.
1	GrandPia	PORTABLE GLAND	C2	18	Tenkey 8	8	F3
2	Metro	METRONOME	C#2	19	Tenkey 9	9	F#3
3	Pc	PC	D2	20	Tenkey -	-	G3
4	Function	FUNCTION	D#2	21	Tenkey 0	0	G#3
5	Song	SONG	E2	22	Tenkey +	+	A3
6	Style	STYLE	F2	23	Acmp	ACMP ON/OFF	A#3
7	Voice	VOICE	F#2	24	Sync Str	SYNC START	B3
8	Dict.	Dict.	G2	25	Str/Stp	START/STOP	C4
9	Lesson L	LESSON L	G#2	26	Int/End	INTRO/ENDING/rit	C#4
10	Lesson R	LESSON R	A2	27	Main/Fil	MAIN/AUTO FILL	D4
11	Tenkey 1	1	A#2	28	Temp/TAP	TEMPO/TAP	D#4
12	Tenkey 2	2	B2	29	Dual	DUAL	E4
13	Tenkey 3	3	C3	30	Split	SPLIT	F4
14	Tenkey 4	4	C#3	31	Harmony	HARMONY	F#4
15	Tenkey 5	5	D3	32	Touch	TOUCH	G4
16	Tenkey 6	6	D#3	33	Light	LIGHT	G#4
17	Tenkey 7	7	E3	34	Demo	DEMO	A4

11	025 K LED	Check that all the LEDs on the keyboard are lit up. The LEDs from C1 to B1 (both white and black keys) on the keyboard are lit up. Check that the LED on each octave is lit up in the following order when you press the highest (rightmost) white key C6 on the keyboard. [LED between C2 and B2, LED between C3 and B3, LED between C4 and B4, LED between C5 and B5, and LED of C6]
12	026 WK LED	Check that all the LEDs of the white keys are lit up. The LEDs of the white keys from C1 to B1 are lit up. Check that all the LEDs of the white keys are lit up in the following order when you press the highest (rightmost) white key C6 on the keyboard. [LEDs from C2 to B2, LEDs from C3 to B3, LEDs from C4 to B4, LEDs from C5 to B5, and LED of C6] Check the LEDs for the difference in brightness.
13	027 BK LED	Check that all the LEDs of the black keys are lit up. The LEDs of the black keys from C1# to A1# are lit up. Check that all the LEDs of the black keys are lit up in the following order when you press the highest (rightmost) white key on the keyboard, C6. [LEDs from C2# to A2#, LEDs from C3# to A3#, LEDs from C4# to A4#, LEDs from C5# to A5#] Check the LEDs for the difference in brightness.
14	028 LCD On	Check that all LCD dots are on.
15	029 LCD Off	Check that all LCD dots are off.

No.	LCD display	Test Function and Judgment Criteria
16	031 PD1 Chk	Connect the foot switch to the [SUSTAIN] jack. Check that the C4 note is output when starting the test program. Check that the C3 note is output when pushing the pedal and that tone is turned off when releasing the pedal. The test result appears on the LCD.
17	037 MIDI Chk	After connecting the [USB] jack and Host PC with a USB cable, execute the test. (Install USB-MIDI driver softwear to Host PC, and then set through mode before inspection.) Check that the C4 note is output and that the test result appears on the LCD.
18	041 ROM Chk2	A ROM that is connected to the CPU bus, is checked. The test results appear on the LCD.
19	042 RAM Chk2	RAM in the CPU is checked. The test results appear on the LCD. (It will take 7 seconds, until being displayed.)
20	045 FRom Chk2	A FLASH ROM that is connected to the CPU bus, is checked. The test results appear on the LCD. (It will take 27 seconds, until being displayed.)
21	046 BackUp 2	Performs the RAM back-up check. Check that the display reads "BackUpNG", then turn off the power switch. (A time of the beginnings surely becomes NG.) Enter the test program and perform the RAM back-up checks, then check again. Check that the LCD displays "BackUpOK".
22	047 Factory	All memorys are cleared. The results appear on the LCD.
23	048 Test Exit	Exit from the test program after executing this test.

■ DATA BACKUP

● Data Backup

The following data can be stored to internal flash memory as data backup.

Group	Parameter
SONG	User Song Data
FUNCTION	Tuning Split Point Touch Sensitivity Sustain On/Off Style Volume Song Volume Metronome Volume Demo Cancel On/Off
Touch	Touch On/Off

⚠ CAUTION

- ***Never attempt to turn the power off when data is being transferred from a computer. Doing so can damage the internal flash memory and result in loss of data.***

• About the Internal Flash Memory

The Song data is stored when data is transferred from a computer. Function and touch On/Off are stored when Pressing and Holding the [FUNCTION] button.

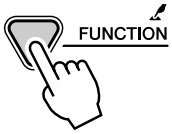

● Data Initialization

• All Data Initialization (including loaded song data)

All data can be initialized by turning on the power while holding the highest (rightmost) white key (C6) and nearest A key (A5) on the keyboard. “CLr All Mem” will appear briefly on the display. You can also execute this setting in the Utility mode

⚠ CAUTION

- ***All data listed above, plus loaded song data, will be erased and/or changed when the All Data Initialization procedure is carried out.***
- ***Carrying out the data initialization procedure will usually restore normal operation if the EZ-250i freezes or begins to act erratically for any reason.***

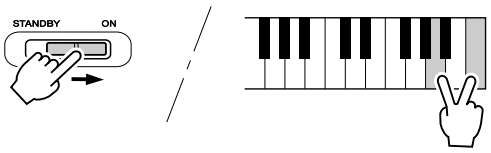

• All data Initialization (excluding song data)

All data except for loaded song data can be initialized by turning on the power while holding the highest (rightmost) white key on the keyboard.

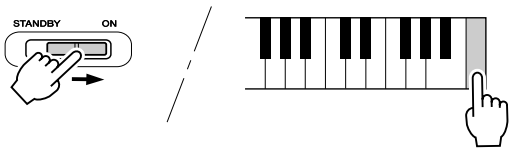

■ MIDI IMPLEMENTATION CHART

YAMAHA [Portable Keyboard] Date:17-Mar-2003
Model EZ-250i MIDI Implementation Chart Version : 1.0

Function...		Transmitted	Recognized	Remarks
Basic	Default	1 - 16	1 - 16 *1	
Channel	Changed	x	x	
Mode	Default	3	3	
	Messages	x	x	
	Altered	**********	x	
Note Number :	True voice	0 - 127 **********	0 - 127 0 - 127	
Velocity	Note ON	o 9nH,v=1-127	o 9nH,v=1-127	
	Note OFF	o 9nH,v=0	o 9nH,v=0 or 8nH	
After	Key's	x	x	
Touch	Ch's	x	x	
Pitch Bend		x *2	o	
Control Change	0,32	o	o	Bank Select
	1	x *2	o	Modulation wheel
	6	x *2	o	Data Entry(MSB)
	38	x	o	Data Entry(LSB)
	7	o	o	Part Volume
	10	o	o	Pan
	11	x *2	o	Expression
	64	o	o	Sustain
	71	x *2	o	Harmonic Content
	72	o	o	Release Time
	73	x *2	o	Attack Time
	74	x *2	o	Brightness
	84	x *2	o	Portamento Cntrl
	91,93	o	o	Effect 1,3 Depth
	94	x *2	o	Effect 4 Depth
	96,97	x	o	RPN Inc,Dec
	100,101	x *2	o	RPN LSB,MSB
Prog Change :	True #	o 0 - 127 **********	o 0 - 127	
System Exclusive		o *3	o *3	
Common	: Song Pos.	x	x	
	: Song Sel.	x	x	
	: Tune	x	x	
System Real Time	: Clock	o	o	
	: Commands	o *4	o *4	
Aux	:All Sound OFF	o	o(120,126,127)	
	:Reset All Cntrls	x	o(121)	
	:Local ON/OFF	x	o(122)	
	:All Notes OFF	x	o(123-125)	
Mes- sages	:Active Sense	o	o	
	:Reset	x	x	

Mode 1 : OMNI ON , POLY Mode 2 : OMNI ON ,MONO o : Yes
Mode 3 : OMNI OFF, POLY Mode 4 : OMNI OFF,MONO x : No

NOTE:

**1 By defaulg (factory settings) the EZ-250i ordinarily functions as a 16-channel multi-timbral tone generator, and incoming data does not affect the panel voices or panel settings. However, the MIDI messages listed below do affect the panel voices, auto accompaniment, and songs.*

- *MIDI Master Tuning*
- *System exclusive messages for changing the Reverb Type and Chorus Type.*

**2 Messages for these control change numbers cannot be transmitted from the EZ-250i itself. However, they may be transmitted when playing the accompaniment, song or using the Harmony effect.*

**3 Exclusive*

<GM System ON> F0H, 7FH, 7FH, 04H, 01H, ll, mm, F7H

- *This message automatically restores all default settings for the instrument, with the exception of MIDI Master Tuning.*

<MIDI Master Volume> F0H, 7FH, 7FH, 04H, 01H, ll, mm, F7H

- *This message allows the volume of all channels to be changed simultaneously (Universal System Exclusive).*
- *The values of "mm" is used for MIDI Master Tuning. (Values for "ll" are ignored.)*

<MIDI Master Tuning> F0H, 43H, 1nH, 27H, 30H, 00H, 00H, mm, ll, cc, F7H

- *This message simultaneously changes the tuning value of all channels.*
- *The values of "mm" and " ll" are used for MIDI Master Tuning.*
- *The default value of "mm" and "ll" are 08H and 00H, respectively. Any values can be used for "n" and "cc."*

<Reverb Type> F0H, 43H, 1nH, 4CH, 02H, 01H, 00H, mmH, llH, F7H

- *mm: Reverb Type MSB*
- *ll: Reverb Type LSB*

Refer to the Effect Map for details.

**4 When the accompaniment is started, an FAH message is transmitted. When accompaniment is stopped, an FCH message is transmitted. When the clock is set to External, both FAH (accompaniment start) and FCH (accompaniment stop) are recognized.*

**5 Local ON/OFF*

<Local ON> Bn, 7A, 7F

<Local OFF> Bn, 7A, 00

Value for "n" is ignored.

Effect map

* If the received value does not contain an effect type in the TYPE LSB, the LSB will be directed to TYPE 0.

* The numbers in parentheses in front of the Effect Type names correspond to the number indicated in the display..

* By using an external sequencer, which is capable of editing and transmitting the system exclusive messages and parameter changes, you can select the Reverb, Chorus and DSP effect types which are not accessible from the EZ-250i panel itself. When one of the effects is selected by the external sequencer, " - " will be shown on the display.

REVERB

TYPE MSB	TYPE LSB								
	00	01	02	08	16	17	18	19	20
000	No Effect								
001	(1)Hall1				(2)Hall2	(3)Hall3			
002	Room					(4)Room1		(5)Room2	
003	Stage				(6)Stage1	(7)Stage2			
004	Plate				(8)Plate1	(9)Plate2			
005 — 127	No Effect								

CHORUS

TYPE MSB	TYPE LSB								
	00	01	02	08	16	17	18	19	20
000 — 063	No Effect								
064	Thru								
065	Chorus		(2)Chorus2						
066	Celeste					(1)Chorus1			
067	Flanger			(3)Flanger1		(4)Flanger2			
068 — 127	No Effect								

PORTATONE

EZ-250i

PARTS LIST

■ CONTENTS

OVERALL ASSEMBLY 2
KEYBOARD ASSEMBLY 4
LCD UNIT 6
ELECTRICAL PARTS 7

Notes: DESTINATION ABBREVIATIONS

A: Australian model	J: Japanese model
B: British model	U: U.S.A. model
C: Canadian model	V: General export model (110V)
E: European model	W: General export model (220V)
H: North European model	X: General export model
I: Indonesian model	Y: Export model

- The numbers in “QTY” show quantities for each unit.
- The parts with “--” in “Parts No.” are not available as spare parts.
- The mark “ } ” in the remarks column indicates that these parts are interchangeable.
- The second letter of the shaded ( ) part number is I, not one.

■ WARNING

Components having special characteristics are marked ⚠ and must be replaced with parts having specification equal to those originally installed.

■ OVERALL ASSEMBLY

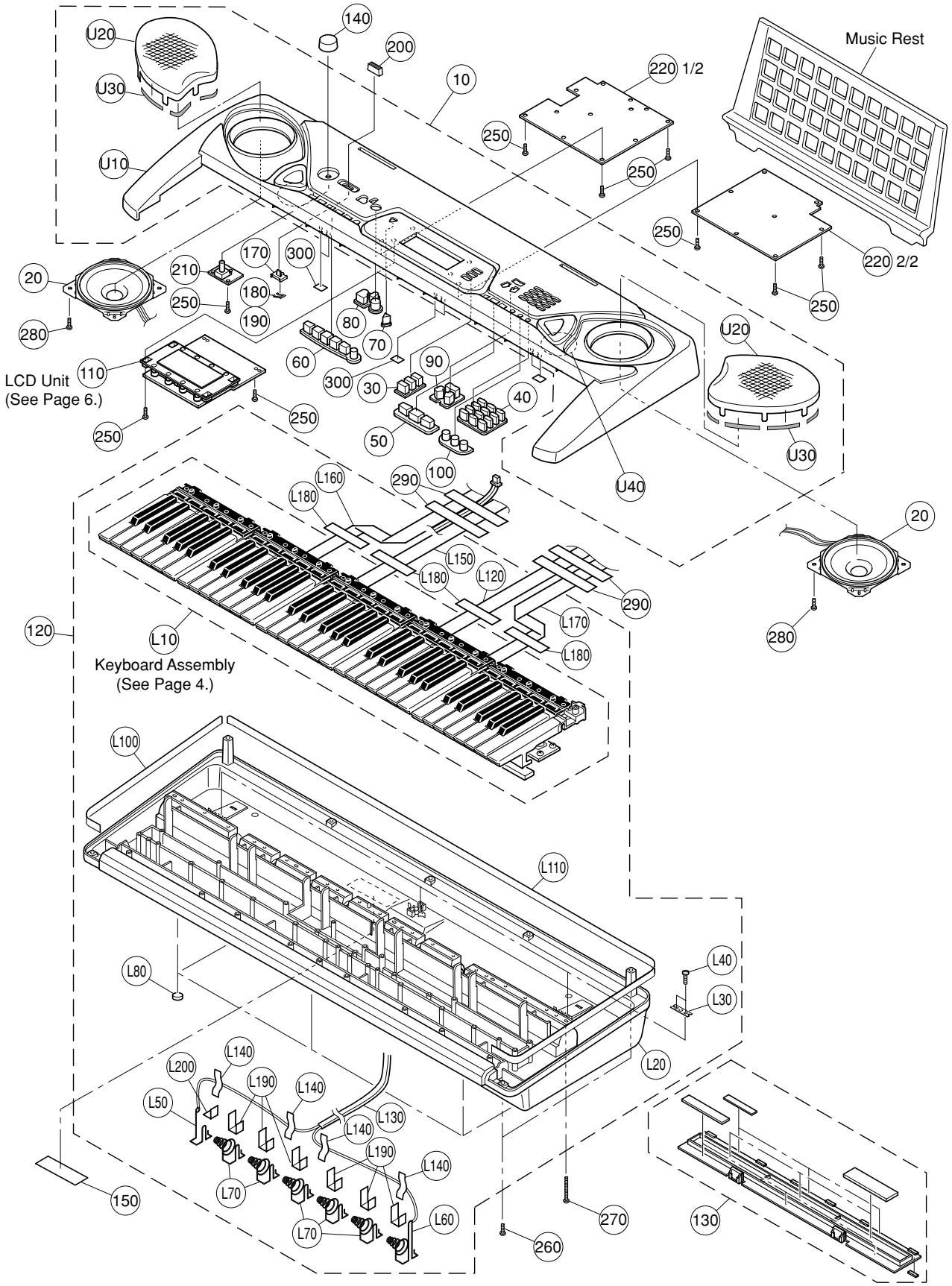

	REF NO.	PART NO.	DESCRIPTION		部品名	REMARKS	QTY	RANK
			OVERALL ASSEMBLY		総組立	EZ-250i		
		--	Overall Assembly	FE	総組立	(WA06650)		
*	10	WA082100	Upper Case Assembly		上ケースAss'y			
	20	X3805A00	Speaker	12.0cm 4ohm 3W	スピーカ		2	
*	30	WA333800	Panel Switch	3	PNスイッチ	SONG, STYLE, VOICE		
*	40	WA334300	Panel Switch		PNスイッチ 印刷品	1,2,3,4,5,6,7,8,9,-/OFF,0/RESET,+/ON		
*	50	WA333900	Panel Switch	3	PNスイッチ	DUAL, SPLIT, HARMONY		
	60	V7032200	Panel Switch	6	PNスイッチ	ACMP ON/OFF, SYNC START, START/STOP, INTRO/ENDING/rit., MAIN/AUTO FILL, TEMPO/TAP		02
	70	V7032300	Panel Switch	1	PNスイッチ	FUNCTION		01
*	80	WA334000	Panel Switch	3	PNスイッチ	METRONOME, PORTABLE GRAND, PC		
*	90	WA334100	Panel Switch	3	PNスイッチ	Dict., L, R		
	100	V7916600	Panel Switch	3	PNスイッチ	TOUCH, LIGHT ON/OFF, DEMO		01
	110	--	LCD Unit		液晶ユニット－03B	(WA26720)		
	120	--	Lower Case Assembly		下ケースAss'y	(WA08130)		
	130	V9259700	Battery Cover Assembly	PT	バッテリーカバーAssy			03
	140	VU432400	Knob	PSR78	ボツマミ	MASTER VOLUME		01
	150	--	Label	EZ-250I FE	規格，製番ラベル	(WA07810)		
	170	VF073800	Slider	LC	スライダー			01
	180	BB005650	Brush	YCUT-MEH	ブラシ			02
	190	VA010200	Grease	G-902, 1kg	グリス			40
	200	VV490600	Knob Black		スライドツマミ	STANDBY/ON		03
*	210	WA699100	Circuit Board	VR	VRシート	(WA69890)(X3891C0)		
*	220	WA699000	Circuit Board	PNAM 1/2, 2/2	PNAMシート	(WA69890)(X3891C0)		
	250	EP600250	Bind Head Tapping Screw-B	3.0X8 MFZN2Y	+バインドBタイト		29	01
	260	VE683000	Bind Head Tapping Screw-B	3.0X12 MFZN2Y	+バインドBタイト		7	01
	270	V7213700	Bind Head Tapping Screw-B	3.0X30 MFZN2Y	+バインドBタイト		5	
	280	EP640410	Bind Head Tapping Screw-B	4.0X8 MFZN2Y	+バインドBタイト		8	01
	290	VV269300	Adhesive Tape	12X120	粘着テープ		4	
	300	--	Dust Proof Cloth	14X6X0.5	不織布	(V789860)	6	
*		WA082100	Upper Case Assembly		上ケースAss'y			
	U10	--	Upper Case		上ケース塗装印刷品	(WA08200)		
*	U20	WA082500	Speaker Grille		SPグリル塗装品		2	
	U30	--	Dust Proof Cloth		不織布	(V719960)	14	
	U40	--	Dust Proof Cloth	40X40 ROUN	不織布	(V529660)	2	
		--	Lower Case Assembly		下ケースAss'y	(WA08130)		
	L10	--	Keyboard Assembly	16N_LIGHTS-UV	16N－C61鍵盤	(V981200)		
	L20	WA081200	Lower Case		下ケース成形品			
	L30	VI104400	Holder	CH	脚取り付け金具天津製		3	
	L40	EP600250	Bind Head Tapping Screw-B	3.0X8 MFZN2Y	+バインドBタイト		6	01
	L50	V7060500	Spring Terminal	+	接点バネ（＋）			01
	L60	V7060700	Spring Terminal	-	接点バネ（－）			01
	L70	V7060200	Spring Terminal		接点バネ		5	01
	L80	CB043750	Foot Black	T1.6	ゴム脚		5	01
	L100	--	Cushion	360X15X1.0	クッション（PE）	(V642100)	2	
	L110	--	Cushion	885X15X1.0	クッション（PE）	(V642110)		
	L120	--	Connector Assembly	MK-H	MK－H束線Ass'y	(V781580)		
	L130	--	Connector Assembly	Battery	電池束線Ass'y	(V718670)		
	L140	VA126100	Adhesive Tape	12X50	粘着テープ		4	03
	L150	--	Connector Assembly	MK-L	MK－L束線Ass'y	(V781590)		
	L160	--	Connector Assembly	GL-L	GL－L束線Ass'y	(V781560)		
	L170	--	Connector Assembly	GL-H	GL－H束線Ass'y	(V781570)		
	L180	--	Adhesive Tape	12X90	粘着テープ	(V591240)	4	
	L190	--	Dust Proof Cloth	40X13X0.5	不織布	(V771130)	6	
	L200	--	Dust Proof Cloth	13X13X0.5	不織布	(V771140)		
			ACCESSORIES		付属品			
		V2115000	Music Rest		譜面立			06
*		X4022A00	CD-ROM		CD－ROM			
*		WB111100	USB Cable	YAF11-0915	USBケーブル			

*: New parts

RANK: Japan only

■ KEYBOARD ASSEMBLY

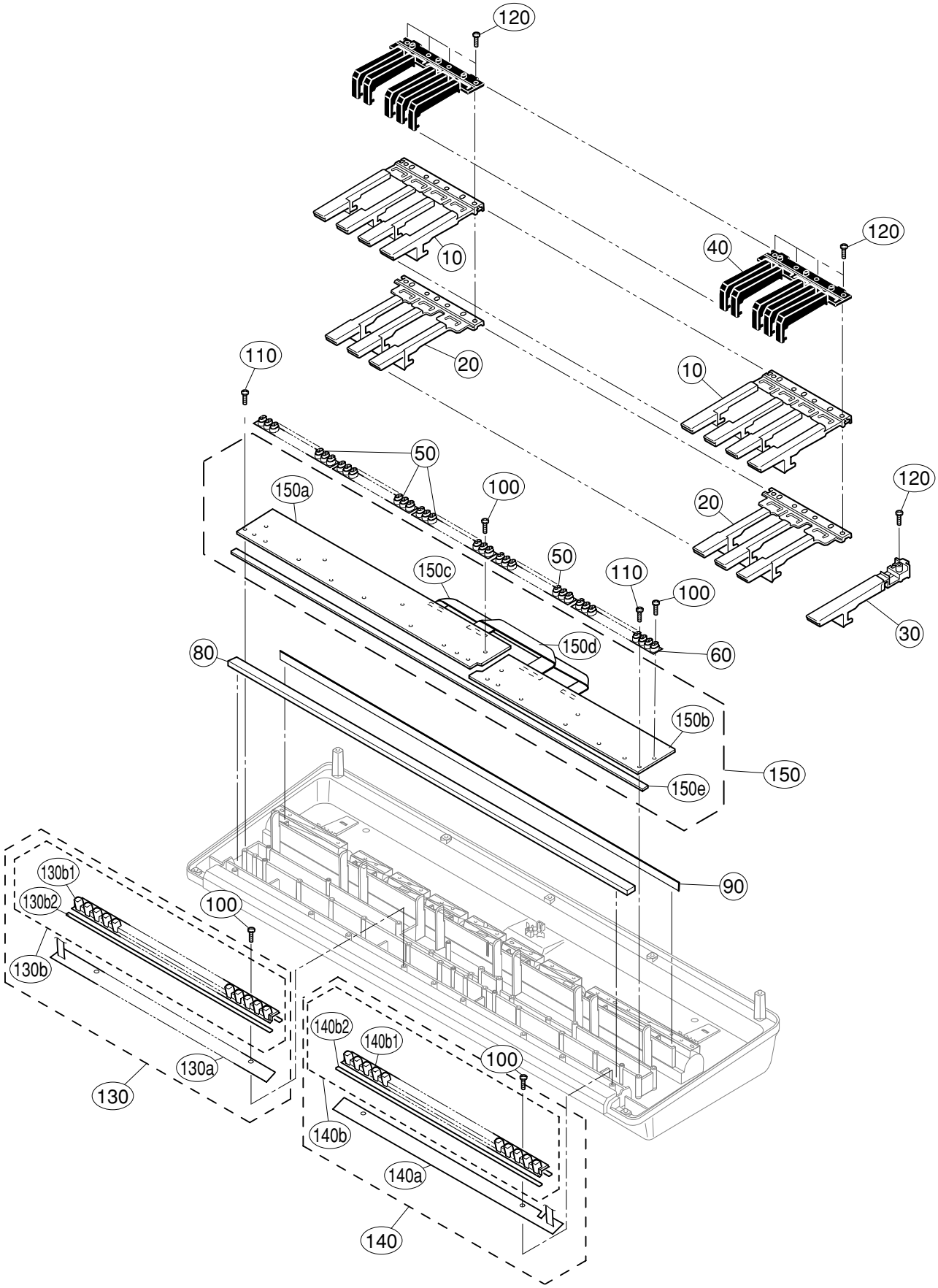

REF NO.	PART NO.	DESCRIPTION		部品名	REMARKS	QTY	RANK
		KEYBOARD ASSEMBLY		鍵盤Ａｓｓ’ｙ	EZ-250i		
	--	Keyboard Assembly	16N LIGHTS-UV	１６Ｎ－Ｃ６１鍵盤	(V981200)		
10	V9808100	White Key	16N CEGB	白鍵ＣＥＧＢ		5	02
10	--	White Key	16N CEGB	白鍵ＣＥＧＢ	(WB12790)	5	
20	V9808200	White Key	16N DFA	白鍵ＤＦＡ		5	02
20	--	White Key	16N DFA	白鍵ＤＦＡ	(WB12800)	5	
30	V9808300	White Key	16N C'	白鍵Ｃ’	C6		01
40	V7760000	Black Key	16N #	黒鍵		5	03
50	V3413600	Rubber Contact	16N-2M OCT 2M	接点ゴム１６Ｎ２Ｍ		4	04
60	V7477400	Rubber Contact	16N-2M 13K 2M	接点ゴム１６Ｎ２Ｍ			04
80	VZ303000	Felt	16N	フェルトＬ			02
90	V7100100	Support Rubber	16N	サポートラバー			03
100	EP600190	Bind Head Tapping Screw-B	3.0X8 MFZN2BL	+バインドＢタイト		16	01
110	VZ313100	Bind Head Tapping Screw-P	SP 3.0X12 MFZNBL	+バインドＰタイト		13	01
120	VT069800	Bind Head Tapping Screw-P	3.0X20 MFZN2	+バインドＰタイト		21	01
130	--	GL-L Unit	16N LIGHTS	ＧＬ－Ｌユニット	(V778710)		
130a	V7756300	Circuit Board	GL-L	ＧＬ－Ｌシート	(V775640)(X0230F0)		11
130b	V7838400	Lamp Cover L Unit		ランプカバーＬユニット			04
130b1	--	Lamp Cover L		ランプカバーＬ	(V776710)		
130b2	--	Adhesive Tape	#500 W= 3	粘着テープ	(VE36240)		
140	--	GL-H Unit	16N LIGHTS	ＧＬ－Ｈユニット	(V778720)		
140a	V7756500	Circuit Board	GL-H	ＧＬ－Ｈシート	(V775660)(X0231E0)		11
140b	V7838500	Lamp Cover H Unit		ランプカバーＨユニット			04
140b1	--	Lamp Cover H		ランプカバーＨ	(V776720)		
140b2	--	Adhesive Tape	#500 W= 3	粘着テープ	(VE36240)		
150	--	Circuit Board Assembly	MK	ＭＫシートＡｓｓ’ｙ	(V783870)		
150a	V7755800	Circuit Board	MK-L	ＭＫ－Ｌシート	(V775610)(X0232E0)		12
150b	V7755900	Circuit Board	MK-H	ＭＫ－Ｈシート	(V775620)(X0233D0)		12
150c	--	Connector Assembly	MK S	ＭＫ中継束線Ｓ	(V776140)		
150d	--	Connector Assembly	MK L	ＭＫ中継束線Ｌ	(V784060)		
150e	VZ302900	Felt	U	フェルトＵ			02

*: New parts

RANK: Japan only

■ LCD UNIT

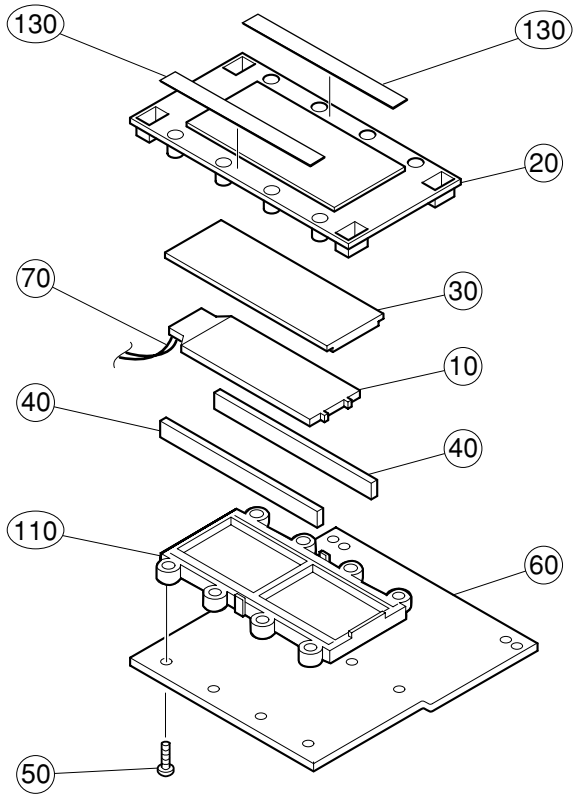

	REF NO.	PART NO.	DESCRIPTION		部品名	REMARKS	QTY	RANK
			LCD UNIT		液晶ユニット	EZ-250i		
		--	LCD Unit		液晶ユニット－０３Ｂ	(WA26720)		
	10	**V5264900**	Back Light Assembly	A	バックライトＡｓｓｙ－Ａ			07
	20	**V5339000**	Panel, LCD	TYPE-A	ＬＣＤパネル成形品			01
*	30	**WA267000**	LCD	TTR7396 TYPE-03B	液晶ディスプレイ			
	40	**V7838000**	Rubber Connector	ZTT-410	ゴムコネクター		2	03
	50	**EP600300**	Bind Head Tapping Screw-P	3.0X12 MFZN2Y	+バインドＰタイト		8	01
*	60	**WA698400**	Circuit Board	DMLCD	ＤＭＬＣＤシート	(WA69830)(X3889C0)		
	70	--	Connector Assembly	LED 2P	ＬＥＤ線材	(V781490)		
	110	**V7172300**	Holder, LCD		ＬＣＤホルダー－ＢＬ			01
	130	--	Dust Proof Cloth	0.5X95X8	不織布	(V706870)	2	

*: New parts

RANK: Japan only

■ ELECTRICAL PARTS

	REF NO.	PART NO.	DESCRIPTION		部品名	REMARKS	QTY	RANK
			ELECTRICAL PARTS		電気部品	EZ-250i		
*		**WA698400**	Circuit Board	DMLCD	DMLCDシート	(WA69830)(X3889C0)		
*		**WA699100**	Circuit Board	VR	VRシート	(WA69890)(X3891C0)		
*		**WA699000**	Circuit Board	PNAM 1/2, 2/2	PNAMシート	(WA69890)(X3891C0)		
		V7756300	Circuit Board	GL-L	GL－Lシート	(V775640)(X0230F0)		11
		V7756500	Circuit Board	GL-H	GL－Hシート	(V775660)(X0231E0)		11
		V7755800	Circuit Board	MK-L	MK－Lシート	(V775610)(X0232E0)		12
		V7755900	Circuit Board	MK-H	MK－Hシート	(V775620)(X0233D0)		12
*		**WA698400**	Circuit Board	DMLCD	DMLCDシート	(WA69830)(X3889C0)		
	C0101	**US062220**	Ceramic Capacitor-SL(chip)	220P 50V J	チップセラ（SL）			01
	C0102	**US063470**	Ceramic Capacitor-B (chip)	4700P 50V K	チップセラ（B）			01
	C0103	**US145100**	Ceramic Capacitor-F (chip)	0.1000 25V Z	チップセラ（F）			01
	C0104	**UF028100**	Electrolytic Cap. (chip)	100 10V	チップケミコン			01
	C0105	**US145100**	Ceramic Capacitor-F (chip)	0.1000 25V Z	チップセラ（F）			01
	-0110	**US145100**	Ceramic Capacitor-F (chip)	0.1000 25V Z	チップセラ（F）			01
	C0111	**US062100**	Ceramic Capacitor-SL(chip)	100P 50V J	チップセラ（SL）			01
	C0112	**US145100**	Ceramic Capacitor-F (chip)	0.1000 25V Z	チップセラ（F）			01
	-0128	**US145100**	Ceramic Capacitor-F (chip)	0.1000 25V Z	チップセラ（F）			01
	C0129	**UF037470**	Electrolytic Cap. (chip)	47 16V	チップケミコン			01
	C0130	**US145100**	Ceramic Capacitor-F (chip)	0.1000 25V Z	チップセラ（F）			01
	C0131	**US145100**	Ceramic Capacitor-F (chip)	0.1000 25V Z	チップセラ（F）			01
	C0132	**UF037470**	Electrolytic Cap. (chip)	47 16V	チップケミコン			01
	C0133	**US145100**	Ceramic Capacitor-F (chip)	0.1000 25V Z	チップセラ（F）			01
	C0134	**US145100**	Ceramic Capacitor-F (chip)	0.1000 25V Z	チップセラ（F）			01
	C0135	**UF037470**	Electrolytic Cap. (chip)	47 16V	チップケミコン			01
	C0136	**US145100**	Ceramic Capacitor-F (chip)	0.1000 25V Z	チップセラ（F）			01
	C0138	**UF037470**	Electrolytic Cap. (chip)	47 16V	チップケミコン			01
	C0201	**US145100**	Ceramic Capacitor-F (chip)	0.1000 25V Z	チップセラ（F）			01
	C0202	**US145100**	Ceramic Capacitor-F (chip)	0.1000 25V Z	チップセラ（F）			01
	C0301	**US145100**	Ceramic Capacitor-F (chip)	0.1000 25V Z	チップセラ（F）			01
	C0302	**US145100**	Ceramic Capacitor-F (chip)	0.1000 25V Z	チップセラ（F）			01
	C0303	**UF037470**	Electrolytic Cap. (chip)	47 16V	チップケミコン			01
	C0304	**US145100**	Ceramic Capacitor-F (chip)	0.1000 25V Z	チップセラ（F）			01
	C0401	**US145100**	Ceramic Capacitor-F (chip)	0.1000 25V Z	チップセラ（F）			01
	C0402	**UF037470**	Electrolytic Cap. (chip)	47 16V	チップケミコン			01
	C0405	**US063220**	Ceramic Capacitor-B (chip)	2200P 50V K	チップセラ（B）			01
	C0406	**US063220**	Ceramic Capacitor-B (chip)	2200P 50V K	チップセラ（B）			01
	C0409	**US062820**	Ceramic Capacitor-B (chip)	820P 50V K	チップセラ（B）			01
	C0410	**US062820**	Ceramic Capacitor-B (chip)	820P 50V K	チップセラ（B）			01
	C0411	**UF066220**	Electrolytic Cap. (chip)	2.2 50V	チップケミコン			01
	C0412	**UF066220**	Electrolytic Cap. (chip)	2.2 50V	チップケミコン			01
	C0413	**US145100**	Ceramic Capacitor-F (chip)	0.1000 25V Z	チップセラ（F）			01
	-0420	**US145100**	Ceramic Capacitor-F (chip)	0.1000 25V Z	チップセラ（F）			01
	C0421	**UF138220**	Electrolytic Cap. (chip)	220 16V UUR1C2	チップケミコン			01
	C0422	**US145100**	Ceramic Capacitor-F (chip)	0.1000 25V Z	チップセラ（F）			01
	C0423	**UF037100**	Electrolytic Cap. (chip)	10 16V	チップケミコン			01
	-0426	**UF037100**	Electrolytic Cap. (chip)	10 16V	チップケミコン			01
	C0501	**US062100**	Ceramic Capacitor-SL(chip)	100P 50V J	チップセラ（SL）			01
	-631	**US062100**	Ceramic Capacitor-SL(chip)	100P 50V J	チップセラ（SL）			01
	C0632	**US145100**	Ceramic Capacitor-F (chip)	0.1000 25V Z	チップセラ（F）			01
	-0638	**US145100**	Ceramic Capacitor-F (chip)	0.1000 25V Z	チップセラ（F）			01
	C0701	**US145100**	Ceramic Capacitor-F (chip)	0.1000 25V Z	チップセラ（F）			01
	C0702	**US145100**	Ceramic Capacitor-F (chip)	0.1000 25V Z	チップセラ（F）			01
	C0703	**US062100**	Ceramic Capacitor-SL(chip)	100P 50V J	チップセラ（SL）			01
	-0725	**US062100**	Ceramic Capacitor-SL(chip)	100P 50V J	チップセラ（SL）			01
	CN001	**VF728200**	Wire Trap	52147 10P TE	ワイヤートラップ			01
	CN002	**VK025500**	Wire Trap	52147 11P TE	ワイヤートラップ			01
	CN003	**VK025700**	Wire Trap	52147 13P TE	ワイヤートラップ			01
	CN004	**VF667600**	Wire Trap	52147 15P TE	ワイヤートラップ			01
	CN005	**VK024900**	Wire Trap	52147 5P TE	ワイヤートラップ			01
	CN007	**VK025500**	Wire Trap	52147 11P TE	ワイヤートラップ			01
	CN008	**VK025600**	Wire Trap	52147 12P TE	ワイヤートラップ			01
	CR101	**WA321100**	Ceramic Resonator	16.9344M CSTCE16M9	セラミック振動子			
*	CR301	**WA698700**	Ceramic Resonator	6M CSTCR6M00G15045	セラミック振動子			
	D0501	**VT332900**	Diode	1SS355 TE-17	ダイオード			01
	-0508	**VT332900**	Diode	1SS355 TE-17	ダイオード			01
	IC101	**X3271A00**	IC	YMW767-V	IC	CPU		
	IC102	**X0165A00**	IC	PST596DNR	IC	SYSTEM RESET		02
*	IC103	**X4076100**	IC	MR27V3202F116TN	IC	P2ROM 32M PROGRAM		
*	IC104	**X2887A00**	IC	CY62126BVLL-70ZI	IC	SRAM 1M		
	IC105	**X2310A00**	IC	MX29LV400BTC-70	IC	FLASH ROM 4M		06
	IC110	**X3679A00**	IC	RH5RZ25CA-T1	IC	REGULATOR +2.5V		
	IC111	**X0638A00**	IC	UPC2933AT-E1	IC	REGULATOR +3.3V		03
	IC112	**XI577A00**	IC	M5233FP	IC	COMPARATOR		01

*: New parts

RANK: Japan only

	REF NO.	PART NO.	DESCRIPTION		部品名	REMARKS	QTY	RANK
	IC201	**XZ987A00**	IC	ML9040A-B01GA	IC	LCD DRIVER		05
*	IC301	**X3921200**	IC	M38K07M4L-303HP	IC	USB		
	IC401	**X3538A00**	IC	PCM1742KE/2K	IC	DAC		
	IC402	**XF634A00**	IC	UPC4572G2-T1	IC	OP AMP		02
	IC601	**XW159A00**	IC	D402117Q	IC	GATE ARRAY		05
	IC602	**X0061A00**	IC	M62742ML	IC	SYSTEM RESET		01
	IC603	**IS013810**	IC	SN74LV138ANSR	IC	DECODER		01
	IC701	**IS013810**	IC	SN74LV138ANSR	IC	DECODER		01
	IC702	**IS013810**	IC	SN74LV138ANSR	IC	DECODER		01
	L0101	**VY657200**	Chip Inductance	600 BK1608HM601	チップインダクタ			01
	L0102	**VY657200**	Chip Inductance	600 BK1608HM601	チップインダクタ			01
	L0301	**VY657200**	Chip Inductance	600 BK1608HM601	チップインダクタ			01
	L0401	**VY657200**	Chip Inductance	600 BK1608HM601	チップインダクタ			01
	-0404	**VY657200**	Chip Inductance	600 BK1608HM601	チップインダクタ			01
	R0104	**RD358100**	Carbon Resistor (chip)	100.0K 63M J	チップ抵抗			01
	R0105	**RD357100**	Carbon Resistor (chip)	10.0K 63M J	チップ抵抗			01
	R0107	**RD357100**	Carbon Resistor (chip)	10.0K 63M J	チップ抵抗			01
	-0109	**RD357100**	Carbon Resistor (chip)	10.0K 63M J	チップ抵抗			01
	R0110	**RD350000**	Carbon Resistor (chip)	0 63M J	チップ抵抗			01
	R0111	**RD357100**	Carbon Resistor (chip)	10.0K 63M J	チップ抵抗			01
	R0112	**RD356100**	Carbon Resistor (chip)	1.0K 63M J	チップ抵抗			01
	R0113	**RD357470**	Carbon Resistor (chip)	47.0K 63M J	チップ抵抗			01
	R0114	**RD357470**	Carbon Resistor (chip)	47.0K 63M J	チップ抵抗			01
	R0115	**RD356470**	Carbon Resistor (chip)	4.7K 63M J	チップ抵抗			01
	-0126	**RD356470**	Carbon Resistor (chip)	4.7K 63M J	チップ抵抗			01
	R0127	**RD357470**	Carbon Resistor (chip)	47.0K 63M J	チップ抵抗			01
	R0128	**RD358100**	Carbon Resistor (chip)	100.0K 63M J	チップ抵抗			01
	R0129	**RD358100**	Carbon Resistor (chip)	100.0K 63M J	チップ抵抗			01
	R0130	**RD357100**	Carbon Resistor (chip)	10.0K 63M J	チップ抵抗			01
	R0131	**RD358100**	Carbon Resistor (chip)	100.0K 63M J	チップ抵抗			01
	R0132	**RD357220**	Carbon Resistor (chip)	22.0K 63M J	チップ抵抗			01
	R0133	**RD357330**	Carbon Resistor (chip)	33.0K 63M J	チップ抵抗			01
	R0134	**RD357470**	Carbon Resistor (chip)	47.0K 63M J	チップ抵抗			01
	R0135	**RD355470**	Carbon Resistor (chip)	470.0 63M J	チップ抵抗			01
	R0136	**RD359100**	Carbon Resistor (chip)	1.0M 63M J	チップ抵抗			01
	R0137	**RD357470**	Carbon Resistor (chip)	47.0K 63M J	チップ抵抗			01
	R0141	**RD356100**	Carbon Resistor (chip)	1.0K 63M J	チップ抵抗			01
	R0142	**RD356100**	Carbon Resistor (chip)	1.0K 63M J	チップ抵抗			01
	-0152	**RD356100**	Carbon Resistor (chip)	1.0K 63M J	チップ抵抗			01
	R0201	**RF457910**	Carbon Resistor (chip)	91.0K : D	チップ抵抗			
	R0202	**RD356220**	Carbon Resistor (chip)	2.2K 63M J	チップ抵抗			01
	-0206	**RD356220**	Carbon Resistor (chip)	2.2K 63M J	チップ抵抗			01
	R0207	**RD356150**	Carbon Resistor (chip)	1.5K 63M J	チップ抵抗			01
	R0208	**RD355220**	Carbon Resistor (chip)	220.0 63M J	チップ抵抗			01
	R0209	**RD354680**	Carbon Resistor (chip)	68.0 63M J	チップ抵抗			01
	R0210	**RD358100**	Carbon Resistor (chip)	100.0K 63M J	チップ抵抗			01
	R0211	**RD358100**	Carbon Resistor (chip)	100.0K 63M J	チップ抵抗			01
	R0212	**RD356100**	Carbon Resistor (chip)	1.0K 63M J	チップ抵抗			01
	R0302	**RD357100**	Carbon Resistor (chip)	10.0K 63M J	チップ抵抗			01
	R0309	**RD357470**	Carbon Resistor (chip)	47.0K 63M J	チップ抵抗			01
	R0310	**RD356150**	Carbon Resistor (chip)	1.5K 63M J	チップ抵抗			01
	R0311	**RD354270**	Carbon Resistor (chip)	27.0 63M J	チップ抵抗			01
	R0312	**RD354270**	Carbon Resistor (chip)	27.0 63M J	チップ抵抗			01
	R0313	**RD356220**	Carbon Resistor (chip)	2.2K 63M J	チップ抵抗			01
	R0314	**RD356270**	Carbon Resistor (chip)	2.7K 63M J	チップ抵抗			01
	R0315	**RD357470**	Carbon Resistor (chip)	47.0K 63M J	チップ抵抗			01
	R0316	**RD357100**	Carbon Resistor (chip)	10.0K 63M J	チップ抵抗			01
	R0317	**RD356100**	Carbon Resistor (chip)	1.0K 63M J	チップ抵抗			01
	R0318	**RD357470**	Carbon Resistor (chip)	47.0K 63M J	チップ抵抗			01
	-0321	**RD357470**	Carbon Resistor (chip)	47.0K 63M J	チップ抵抗			01
	R0403	**RD356470**	Carbon Resistor (chip)	4.7K 63M J	チップ抵抗			01
	R0406	**RD356470**	Carbon Resistor (chip)	4.7K 63M J	チップ抵抗			01
	R0409	**RD356470**	Carbon Resistor (chip)	4.7K 63M J	チップ抵抗			01
	R0411	**RD356470**	Carbon Resistor (chip)	4.7K 63M J	チップ抵抗			01
	R0413	**RD356470**	Carbon Resistor (chip)	4.7K 63M J	チップ抵抗			01
	R0414	**RD356470**	Carbon Resistor (chip)	4.7K 63M J	チップ抵抗			01
	R0415	**RD354680**	Carbon Resistor (chip)	68.0 63M J	チップ抵抗			01
	R0501	**RD357100**	Carbon Resistor (chip)	10.0K 63M J	チップ抵抗			01
	-0505	**RD357100**	Carbon Resistor (chip)	10.0K 63M J	チップ抵抗			01
	R0506	**RD356100**	Carbon Resistor (chip)	1.0K 63M J	チップ抵抗			01
	-0510	**RD356100**	Carbon Resistor (chip)	1.0K 63M J	チップ抵抗			01
	R0511	**RD354470**	Carbon Resistor (chip)	47.0 63M J	チップ抵抗			01
	-0518	**RD354470**	Carbon Resistor (chip)	47.0 63M J	チップ抵抗			01
	R0519	**RD357100**	Carbon Resistor (chip)	10.0K 63M J	チップ抵抗			01
	R0520	**RD354470**	Carbon Resistor (chip)	47.0 63M J	チップ抵抗			01

*: New parts

RANK: Japan only

REF NO.	PART NO.	DESCRIPTION		部品名	REMARKS	QTY	RANK
-0524	**RD357470**	Carbon Resistor (chip)	47.0K 63M J	チップ抵抗			01
R0525	**RD356100**	Carbon Resistor (chip)	1.0K 63M J	チップ抵抗			01
R0609	**RD357470**	Carbon Resistor (chip)	47.0K 63M J	チップ抵抗			01
R0610	**RD357100**	Carbon Resistor (chip)	10.0K 63M J	チップ抵抗			01
R0611	**RD356100**	Carbon Resistor (chip)	1.0K 63M J	チップ抵抗			01
R0612	**RD356100**	Carbon Resistor (chip)	1.0K 63M J	チップ抵抗			01
R0613	**RD357100**	Carbon Resistor (chip)	10.0K 63M J	チップ抵抗			01
R0614	**RD356100**	Carbon Resistor (chip)	1.0K 63M J	チップ抵抗			01
R0615	**RD356100**	Carbon Resistor (chip)	1.0K 63M J	チップ抵抗			01
R0616	**RD357100**	Carbon Resistor (chip)	10.0K 63M J	チップ抵抗			01
R0617	**RD356100**	Carbon Resistor (chip)	1.0K 63M J	チップ抵抗			01
R0618	**RD356100**	Carbon Resistor (chip)	1.0K 63M J	チップ抵抗			01
R0619	**RD357100**	Carbon Resistor (chip)	10.0K 63M J	チップ抵抗			01
R0620	**RD356100**	Carbon Resistor (chip)	1.0K 63M J	チップ抵抗			01
R0621	**RD356100**	Carbon Resistor (chip)	1.0K 63M J	チップ抵抗			01
R0624	**RD354560**	Carbon Resistor (chip)	56.0 63M J	チップ抵抗			01
-0687	**RD354560**	Carbon Resistor (chip)	56.0 63M J	チップ抵抗			01
R0701	**RD355100**	Carbon Resistor (chip)	100.0 63M J	チップ抵抗			01
-0711	**RD355100**	Carbon Resistor (chip)	100.0 63M J	チップ抵抗			01
R6100	**RD357100**	Carbon Resistor (chip)	10.0K 63M J	チップ抵抗			01
-6103	**RD357100**	Carbon Resistor (chip)	10.0K 63M J	チップ抵抗			01
TA601	**V6795400**	Transistor Array	M54585FP	トランジスタアレイ			03
TA602	**V6795400**	Transistor Array	M54585FP	トランジスタアレイ			03
TH201	**V9140600**	Thermistor (chip)	ERTJ1VT152J 1.5K	チップサーミスタ			
TR301	**VV556500**	Transistor	2SA1037AK Q,R,S	トランジスタ			01
TR302	**VV556400**	Transistor	2SC2412K Q,R,S	トランジスタ			01
TR601	**VQ987100**	Transistor	2SB2SB1121 S,T,U	トランジスタ			01
TR602	**VV556500**	Transistor	2SA1037AK Q,R,S	トランジスタ			01
TR603	**VQ987100**	Transistor	2SB2SB1121 S,T,U	トランジスタ			01
TR604	**VV556500**	Transistor	2SA1037AK Q,R,S	トランジスタ			01
TR605	**VQ987100**	Transistor	2SB2SB1121 S,T,U	トランジスタ			01
TR606	**VV556500**	Transistor	2SA1037AK Q,R,S	トランジスタ			01
TR607	**VQ987100**	Transistor	2SB2SB1121 S,T,U	トランジスタ			01
TR608	**VV556500**	Transistor	2SA1037AK Q,R,S	トランジスタ			01
*	**WA699100**	Circuit Board	VR	VR シート	(WA69890)(X3891C0)		
*	**WA699000**	Circuit Board	PNAM 1/2, 2/2	PNAM シート	(WA69890)(X3891C0)		
	EP600190	Bind Head Tapping Screw-B	3.0X8 MFZN2BL	+バインドBタイト			01
	--	Grease	G-746	シリコングリス	(0412125)		
	VA119300	Adhesive Tape	12X25	粘着テープ			01
	--	Jumper Wire	0.55	ジャンパー線	(VA07890)		
C0101	**VU838100**	Monolithic Mylar Capacitor	1.0000 50V J	積層マイラーコン			
C0102	**VU838100**	Monolithic Mylar Capacitor	1.0000 50V J	積層マイラーコン			
C0103	**FG612470**	Ceramic Capacitor-B	470P 50V K	セラコン(B)			01
C0105	**FG612470**	Ceramic Capacitor-B	470P 50V K	セラコン(B)			01
C0107	**UR837470**	Electrolytic Cap.	47.00 16.0V	ケミコン			01
-0109	**UR837470**	Electrolytic Cap.	47.00 16.0V	ケミコン			01
C0110	**UR838100**	Electrolytic Cap.	100.00 16.0V	ケミコン			01
C0111	**VC694800**	Semiconductive Cera. Cap.	0.1000 25V Z	半導体セラコン			01
C0112	**UR838100**	Electrolytic Cap.	100.00 16.0V	ケミコン			01
C0113	**VR168500**	Monolithic Mylar Capacitor	ECQ-V1H154JL3	積層マイラーコン			01
C0114	**VR168500**	Monolithic Mylar Capacitor	ECQ-V1H154JL3	積層マイラーコン			01
C0115	**UR839100**	Electrolytic Cap.	1000 16.0V	ケミコン			01
C0116	**UR839100**	Electrolytic Cap.	1000 16.0V	ケミコン			01
C0117	**UR837470**	Electrolytic Cap.	47.00 16.0V	ケミコン			01
C0118	**UR837470**	Electrolytic Cap.	47.00 16.0V	ケミコン			01
C0119	**UR848470**	Electrolytic Cap.	470.00 25.0V	ケミコン			01
C0120	**VC694800**	Semiconductive Cera. Cap.	0.1000 25V Z	半導体セラコン			01
C0121	**VC694800**	Semiconductive Cera. Cap.	0.1000 25V Z	半導体セラコン			01
C0122	**UR828100**	Electrolytic Cap.	100.00 10.0V	ケミコン			01
C0201	**FG651220**	Ceramic Capacitor-SL	22P 50V J	セラコン(SL)			01
-0203	**FG651220**	Ceramic Capacitor-SL	22P 50V J	セラコン(SL)			01
C0204	**FG613100**	Ceramic Capacitor-B	1000P 50V K	セラコン(B)			01
CN101	**LB918020**	Base Post Connector	XH 2P TE	ベーステキポスト			01
CN102	**VI878800**	Cable Holder	51048 10P TE	ケーブルホルダー			01
CN103	**VI878700**	Cable Holder	51048 9P TE	ケーブルホルダー			01
CN104	**VI878000**	Cable Holder	51048 2P TE	ケーブルホルダー			01
CN105	**VK024900**	Wire Trap	52147 5P TE	ワイヤートラップ			01
CN106	**VI878300**	Cable Holder	51048 5P TE	ケーブルホルダー			01
CN110	**VK024600**	Wire Trap	52147 2P TE	ワイヤートラップ			01
CN201	**VI878300**	Cable Holder	51048 5P TE	ケーブルホルダー			01
CN202	**VI878700**	Cable Holder	51048 9P TE	ケーブルホルダー			01
CN203	**VI879300**	Cable Holder	51048 15P TE	ケーブルホルダー			01
CN204	**VI878000**	Cable Holder	51048 2P TE	ケーブルホルダー			01
D0101	**VV731400**	Diode	2A02M	ダイオード			01

*: New parts

RANK: Japan only

	REF NO.	PART NO.	DESCRIPTION		部品名	REMARKS	QTY	RANK
⚠	D0101	**VY717100**	Diode	LT2A02-E	ダイオード			01
⚠	D0101	**V8603100**	Diode	2A02GM	ダイオード			
⚠	D0102	**VV731400**	Diode	2A02M	ダイオード			01
⚠	D0102	**VY717100**	Diode	LT2A02-E	ダイオード			01
⚠	D0102	**V8603100**	Diode	2A02GM	ダイオード			
	D0201	**VU647200**	Diode	RB441Q-40 T-77	ダイオード			01
	-0204	**VU647200**	Diode	RB441Q-40 T-77	ダイオード			01
	HS001	--	Heat Sink	#2685	放熱板	(V561400)		
	IC101	**XV771A00**	IC	BA5417	IC	POWER AMP 5.0W 2CH		03
	IC102	**XZ999A00**	IC	UPC2905HF	IC	REGULATOR +5V		03
⚠	JK101	**LB302260**	Connector	HEC0470-01-630	電源コネクタ	DC IN 12V		02
⚠	JK101	**V6557600**	Connector	HTJ-020-05AZ	電源コネクタ	DC IN 12V		04
	JK102	**LB101870**	Phone Jack	YKB21-5006	ホーンコネクタ	PHONES/OUTPUT		03
	JK201	**VC687500**	Phone Jack	YKB21-5014	ホーンコネクタ（黒）	SUSTAIN		01
	JK202	**V6802600**	Jack	USB 4P SE	USBジャック	USB		02
	L0101	**VB835000**	Coil	FL5R200QNT 20uH	コイル20U			01
	L0102	**VB835000**	Coil	FL5R200QNT 20uH	コイル20U			01
	L0201	**VB835000**	Coil	FL5R200QNT 20uH	コイル20U			01
	L0204	**VB835000**	Coil	FL5R200QNT 20uH	コイル20U			01
	-0206	**VB835000**	Coil	FL5R200QNT 20uH	コイル20U			01
	R0101	**HF757150**	Carbon Resistor	15.0K 1/4 J	カーボン抵抗			01
	R0102	**HF757150**	Carbon Resistor	15.0K 1/4 J	カーボン抵抗			01
	R0103	**HF756470**	Carbon Resistor	4.7K 1/4 J	カーボン抵抗			01
	R0104	**HF756470**	Carbon Resistor	4.7K 1/4 J	カーボン抵抗			01
	R0107	**HF755470**	Carbon Resistor	470.0 1/4 J	カーボン抵抗			01
	R0108	**HF755470**	Carbon Resistor	470.0 1/4 J	カーボン抵抗			01
	R0111	**HF753220**	Carbon Resistor	2.2 1/4 J	カーボン抵抗			01
	R0112	**HF753220**	Carbon Resistor	2.2 1/4 J	カーボン抵抗			01
	R0113	**HF755100**	Carbon Resistor	100.0 1/4 J	カーボン抵抗			01
	R0114	**HF755100**	Carbon Resistor	100.0 1/4 J	カーボン抵抗			01
	R0117	**HF758100**	Carbon Resistor	100.0K 1/4 J	カーボン抵抗			01
	R0118	**HF757470**	Carbon Resistor	47.0K 1/4 J	カーボン抵抗			01
	R0119	**HF756220**	Carbon Resistor	2.2K 1/4 J	カーボン抵抗			01
	R0120	**HF756220**	Carbon Resistor	2.2K 1/4 J	カーボン抵抗			01
	R0121	**HF757470**	Carbon Resistor	47.0K 1/4 J	カーボン抵抗			01
	R0130	**HF755220**	Carbon Resistor	220.0 1/4 J	カーボン抵抗			01
	-0135	**HF755220**	Carbon Resistor	220.0 1/4 J	カーボン抵抗			01
⚠	TH101	**VU847300**	Poly Switch	RUE185 1.85A 30V	ポリスイッチ			03
	TR101	**VH481100**	Transistor	2SB1416(TA) Q,R	トランジスタ			01
	TR102	**IC174070**	Transistor	2SC1740S R,S	トランジスタ			01
	VR101	**VZ048400**	Rotary Variable Resistor	A10K XV0141GPVN20F	二連ロータリーVR	MASTER VOLUME		02
	WH101	--	Connector Assembly	GND	GND線材	(V759780)		
	WH102	--	Connector Assembly	PNAM1 10P	PNAM1線材	(WB02440)		
	WH103	--	Connector Assembly	PNAM2 9P	PNAM2線材	(WB02450)		
	WH104	--	Connector Assembly	SP 2P	SP線材	(WB06490)		
	WH106	--	Connector Assembly	VR 5P	VR線材	(V719680)		
	WH201	--	Connector Assembly	USB 5P	USB線材	(WB02530)		
	WH203	--	Connector Assembly	PNAM3 15P	PNAM3線材	(WB02470)		
	WH204	--	Connector Assembly	SP 2P	SP線材	(WB06490)		
		V7756300	Circuit Board	GL-L	GL-Lシート	(V775640)(X0230F0)		11
		--	Jumper Wire	0.55	ジャンパー線	(VA07890)		
	CN1	--	Connector Assembly	GL	GL束線	(V775730)		
	LD1	**V7754900**	LED Red	SLI-343URTB7	LED	C1		02
	LD3	**V7754900**	LED Red	SLI-343URTB7	LED	D1		02
	LD5	**V7754900**	LED Red	SLI-343URTB7	LED	E1		02
	LD6	**V7754900**	LED Red	SLI-343URTB7	LED	F1		02
	LD8	**V7754900**	LED Red	SLI-343URTB7	LED	G1		02
	LD10	**V7754900**	LED Red	SLI-343URTB7	LED	A2		02
	LD12	**V7754900**	LED Red	SLI-343URTB7	LED	B2		02
	LD13	**V7754900**	LED Red	SLI-343URTB7	LED	C2		02
	LD15	**V7754900**	LED Red	SLI-343URTB7	LED	D2		02
	LD17	**V7754900**	LED Red	SLI-343URTB7	LED	E2		02
	LD18	**V7754900**	LED Red	SLI-343URTB7	LED	F2		02
	LD20	**V7754900**	LED Red	SLI-343URTB7	LED	G2		02
	LD22	**V7754900**	LED Red	SLI-343URTB7	LED	A3		02
	LD24	**V7754900**	LED Red	SLI-343URTB7	LED	B3		02
	LD25	**V7754900**	LED Red	SLI-343URTB7	LED	C3		02
	LD27	**V7754900**	LED Red	SLI-343URTB7	LED	D3		02
	LD29	**V7754900**	LED Red	SLI-343URTB7	LED	E3		02
	LD30	**V7754900**	LED Red	SLI-343URTB7	LED	F3		02
		V7756500	Circuit Board	GL-H	GL-Hシート	(V775660)(X0231E0)		11
	CN1	--	Connector Assembly	GL	GL束線	(V775730)		
	LD32	**V7754900**	LED Red	SLI-343URTB7	LED	G3		02

∗: New parts

RANK: Japan only

REF NO.	PART NO.	DESCRIPTION		部品名	REMARKS	QTY	RANK
LD34	**V7754900**	LED Red	SLI-343URTB7	LED	A4		02
LD36	**V7754900**	LED Red	SLI-343URTB7	LED	B4		02
LD37	**V7754900**	LED Red	SLI-343URTB7	LED	C4		02
LD39	**V7754900**	LED Red	SLI-343URTB7	LED	D4		02
LD41	**V7754900**	LED Red	SLI-343URTB7	LED	E4		02
LD42	**V7754900**	LED Red	SLI-343URTB7	LED	F4		02
LD44	**V7754900**	LED Red	SLI-343URTB7	LED	G4		02
LD46	**V7754900**	LED Red	SLI-343URTB7	LED	A5		02
LD48	**V7754900**	LED Red	SLI-343URTB7	LED	B5		02
LD49	**V7754900**	LED Red	SLI-343URTB7	LED	C5		02
LD51	**V7754900**	LED Red	SLI-343URTB7	LED	D5		02
LD53	**V7754900**	LED Red	SLI-343URTB7	LED	E5		02
LD54	**V7754900**	LED Red	SLI-343URTB7	LED	F5		02
LD56	**V7754900**	LED Red	SLI-343URTB7	LED	G5		02
LD58	**V7754900**	LED Red	SLI-343URTB7	LED	A6		02
LD60	**V7754900**	LED Red	SLI-343URTB7	LED	B6		02
LD61	**V7754900**	LED Red	SLI-343URTB7	LED	C6		02
	V7755800	Circuit Board	MK-L	MK－Lシート	(V775610)(X0232E0)		12
	--	Masking Tape	W=15	マスキングテープ	(VQ76950)		
CN1	**VK025100**	Wire Trap	52147 7P TE	ワイヤートラップ			01
CN2	**VK025800**	Wire Trap	52147 14P TE	ワイヤートラップ			01
CN3	**VK025500**	Wire Trap	52147 11P TE	ワイヤートラップ			01
CN4	**VE851300**	Wire Trap	52004 12P TE	ワイヤートラッフ゜			
CN5	**VK025600**	Wire Trap	52147 12P TE	ワイヤートラップ			01
D1	**VV437800**	Diode	1N4148(DO-34)	ダイオード			01
-72	**VV437800**	Diode	1N4148(DO-34)	ダイオード			01
LD2	**V7754900**	LED Red	SLI-343URTB7	LED	C#1		02
LD4	**V7754900**	LED Red	SLI-343URTB7	LED	D#1		02
LD7	**V7754900**	LED Red	SLI-343URTB7	LED	F#1		02
LD9	**V7754900**	LED Red	SLI-343URTB7	LED	G#1		02
LD11	**V7754900**	LED Red	SLI-343URTB7	LED	A#1		02
LD14	**V7754900**	LED Red	SLI-343URTB7	LED	C#2		02
LD16	**V7754900**	LED Red	SLI-343URTB7	LED	D#2		02
LD19	**V7754900**	LED Red	SLI-343URTB7	LED	F#2		02
LD21	**V7754900**	LED Red	SLI-343URTB7	LED	G#2		02
LD23	**V7754900**	LED Red	SLI-343URTB7	LED	A#2		02
LD26	**V7754900**	LED Red	SLI-343URTB7	LED	C#2		02
LD28	**V7754900**	LED Red	SLI-343URTB7	LED	D#2		02
LD31	**V7754900**	LED Red	SLI-343URTB7	LED	F#3		02
LD33	**V7754900**	LED Red	SLI-343URTB7	LED	G#3		02
LD35	**V7754900**	LED Red	SLI-343URTB7	LED	A#3		02
	V7755900	Circuit Board	MK-H	MK－Hシート	(V775620)(X0233D0)		12
	--	Masking Tape	W=15	マスキングテープ	(VQ76950)		
CN1	**VK025100**	Wire Trap	52147 7P TE	ワイヤートラップ			01
CN2	**VK025500**	Wire Trap	52147 11P TE	ワイヤートラップ			01
CN4	**VK025800**	Wire Trap	52147 14P TE	ワイヤートラップ			01
CN5	**VE851300**	Wire Trap	52004 12P TE	ワイヤートラップ			
CN6	**VK025700**	Wire Trap	52147 13P TE	ワイヤートラップ			01
D73	**VV437800**	Diode	1N4148(DO-34)	ダイオード			01
-122	**VV437800**	Diode	1N4148(DO-34)	ダイオード			01
LD38	**V7754900**	LED Red	SLI-343URTB7	LED	C#4		02
LD40	**V7754900**	LED Red	SLI-343URTB7	LED	D#4		02
LD43	**V7754900**	LED Red	SLI-343URTB7	LED	F#4		02
LD45	**V7754900**	LED Red	SLI-343URTB7	LED	G#4		02
LD47	**V7754900**	LED Red	SLI-343URTB7	LED	A#5		02
LD50	**V7754900**	LED Red	SLI-343URTB7	LED	C#5		02
LD52	**V7754900**	LED Red	SLI-343URTB7	LED	D#5		02
LD55	**V7754900**	LED Red	SLI-343URTB7	LED	F#5		02
LD57	**V7754900**	LED Red	SLI-343URTB7	LED	G#5		02
LD59	**V7754900**	LED Red	SLI-343URTB7	LED	A#6		02
	X3805A00	Speaker	12.0cm 4ohm 3W	スピーカ		2	
*	**WA267000**	LCD	TTR7396 TYPE-03B	液晶ディスプレイ			
	V5264900	Back Light Assembly	A	バックライトAssy－A			07

*: New parts

RANK: Japan only

■ EZ-250i OVERALL CIRCUIT DIAGRAM 1/2 (DMLCD, MK-H, MK-L)

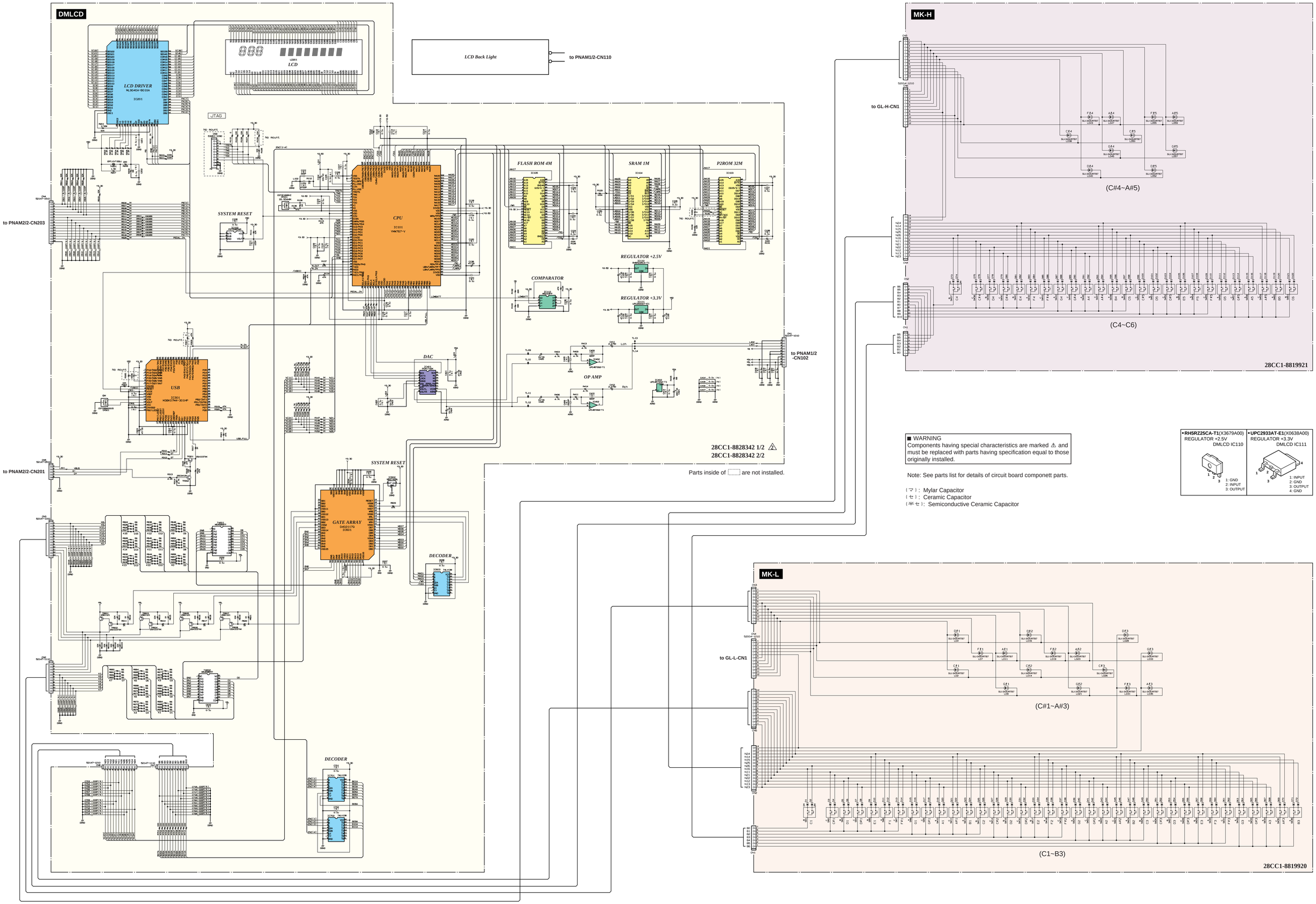

■ WARNING
Components having special characteristics are marked ⚠ and must be replaced with parts having specification equal to those originally installed.

Note: See parts list for details of circuit board componett parts.

(マ): Mylar Capacitor
(セ): Ceramic Capacitor
(半セ): Semiconductive Ceramic Capacitor

• **RH5RZ25CA-T1**(X3679A00)
REGULATOR +2.5V
DMLCD IC110
1: GND
2: INPUT
3: OUTPUT

• **UPC2933AT-E1**(X0638A00)
REGULATOR +3.3V
DMLCD IC111
1: INPUT
2: GND
3: OUTPUT
4: GND

■ EZ-250i OVERALL CIRCUIT DIAGRAM 2/2 (PNAM1/2, PNAM2/2, GL-L, GL-H, VR)

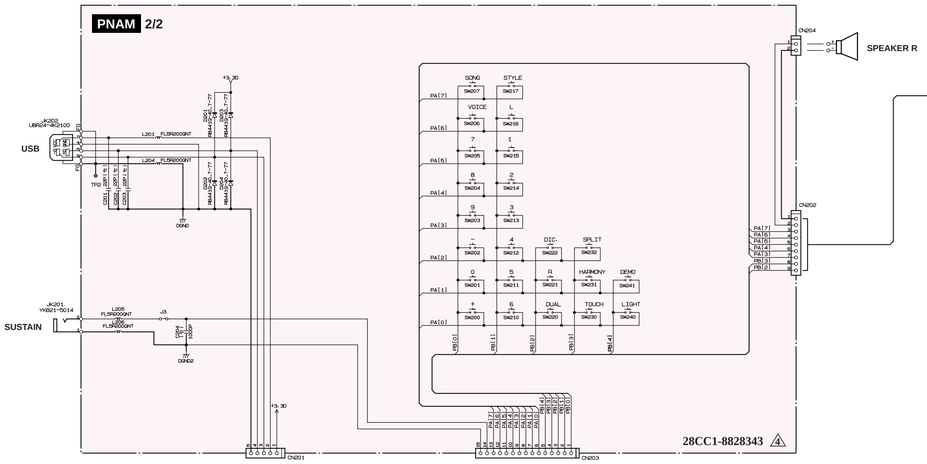

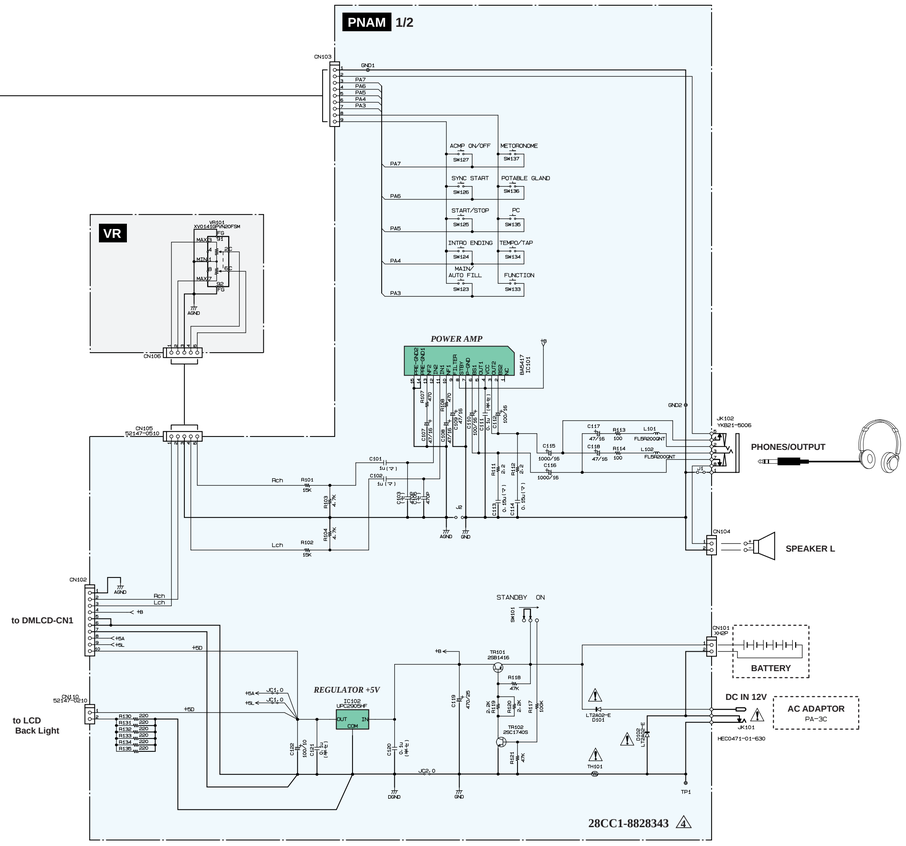

• **UPC2905AHF**(XZ999A00)
REGULATOR +5V
PNAM1/2 IC102

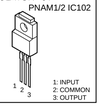

■ WARNING
Components having special characteristics are marked ⚠ and must be replaced with parts having specification equal to those originally installed.

Note: See parts list for details of circuit board componett parts.

〔マ〕: Mylar Capacitor
〔セ〕: Ceramic Capacitor
〔半セ〕: Semiconductive Ceramic Capacitor

