PORTATONE
EZ-20
SERVICE MANUAL



CONTENTS

SPECIFICATIONS 3
PANEL LAYOUT 4
BLOCK DIAGRAM 5
CIRCUIT BOARD LAYOUT & WIRING 6
DISASSEMBLY PROCEDURE 7
LSI PIN DESCRIPTION 10
IC BLOCK DIAGRAM 12
CIRCUIT BOARDS 13
TEST PROGRAM 18
MIDI IMPLEMENTATION CHART 20
OVERALL CIRCUIT DIAGRAM
PARTS LIST

This document is printed on chlorine free (ECF) paper with soy ink.

PK 001655

YAMAHA
HAMAMATSU, JAPAN
1.421K-446 Printed in Japan '01.07

IMPOR TANT NOTICE

This manual has been provided for the use of authorized Yamaha Retailers and their service personnel. It has been assumed that basic service procedures inherent to the industry, and more specifically Yamaha Products, are already known and understood by the users, and have therefore not been restated.

WARNING : Failure to follow appropriate service and safety procedures when servicing this product may result in personal injury, destruction of expensive components and failure of the product to perform as specified. For these reasons, we advise all Yamaha product owners that all service required should be performed by an authorized Yamaha Retailer or the appointed service representative.

IMPORTANT : This presentation or sale of this manual to any individual or firm does not constitute authorization certification, recognition of any applicable technical capabilities, or establish a principal-agent relationship of any form.

The data provided is belived to be accurate and applicable to the unit(s) indicated on the cover. The research engineering, and service departments of Yamaha are continually striving to improve Yamaha products. Modifications are, therefore, inevitable and changes in specification are subject to change without notice or obligation to retrofit. Should any discrepancy appear to exist, please contact the distributor's Service Division.

WARNING : Static discharges can destroy expensive components. Discharge any static electricity your body may have accumulated by grounding yourself to the ground bus in the unit (heavy gauge black wires connect to this bus.)

IMPORTANT : Turn the unit OFF during disassembly and parts replacement. Recheck all work before you apply power to the unit.

WARNING: CHEMICAL CONTENT NOTICE!

The solder used in the production of this product contains LEAD. In addition, other electrical/electronic and/or plastic (Where applicable) components may also contain traces of chemicals found by the California Health and Welfare Agency (and possibly other entities) to cause cancer and/or birth defects or other reproductive harm.

DO NOT PLACE SOLDER, ELECTRICAL/ELECTRONIC OR PLASTIC COMPONENTS IN YOUR MOUTH FOR ANY REASON WHAT SO EVER!

Avoid prolonged, unprotected contact between solder and your skin! When soldering, do not inhale solder fumes or expose eyes to solder/flux vapor!

If you come in contact with solder or components located inside the enclosure of this product, wash your hands before handling food.

■ WARNING

Components having special characteristics are marked ⚠ and must be replaced with parts having specification equal to those originally installed.

SPECIFICATIONS

Keyboards
- 61 standard-size keys (C1 –C6) with Light Guide

Display
- Large multi-function LCD display

Setup
- STANDBY/ON
- MASTER VOLUME : MIN - MAX

Panel Controls
- OVERALL, SONG, VOICE, STYLE, PORTABLE GRAND, METRONOME, DEMO, Dict., L, R, [0] – [9], [+] (ON), [–] (OFF), TEMPO/TAP, LESSON [1]–[3], ABC/DoReMi, LIGHT ON/OFF

Voice
- 100 voices
- Polyphony : 16

Auto Accompaniment
- 100 styles
- Accompaniment Control : ACMP ON/OFF, SYNC START, START/STOP, INTRO/ENDING, MAIN A/B(AUTO FILL)
- Fingering : Multi fingering
- Accompaniment Volume

Yamaha Educational Suite
- Dictionary
- Lesson 1–3

One Touch Setting
- Voice (for each style or song)

Overall controls
- ABC/DoReMi
- Grade
- Talking
- Transpose
- Tuning
- Accompaniment Volume
- Song Volume
- Metronome Volume

Effects
- Dual (Included in Voice)
- Harmony/Echo (Included in Voice)
- Split (Included in Voice)
- Sustain

Preset Song
- 100 Songs

Auxiliary jacks
- PHONES/OUTPUT, DC IN 12V, MIDI IN/OUT, SUSTAIN

Amplifier
- 2 W + 2 W

Speakers
- 12 cm x 2

Power Supply
- Adaptor : Yamaha PA-3B AC power adaptor
- Batteries : Six “D” size, R20P(LR20) or equivalent batteries

Power Consumption
- 10 W (when using PA-3B power adaptor)

Dimensions (W x D x H)
- 931 x 348.8 x 127.9 mm

Weight
- 5.0 kg

Supplied Accessories
- Music Stand
- Owner’s Manual
- Song Book

Optional Accessories
- Headphones : HPE-150
- AC power adaptor : PA-3B
- Footswitch : FC4, FC5
- Keyboard stand : L-2L, L-2C

PANEL LAYOUT

● Front Panel

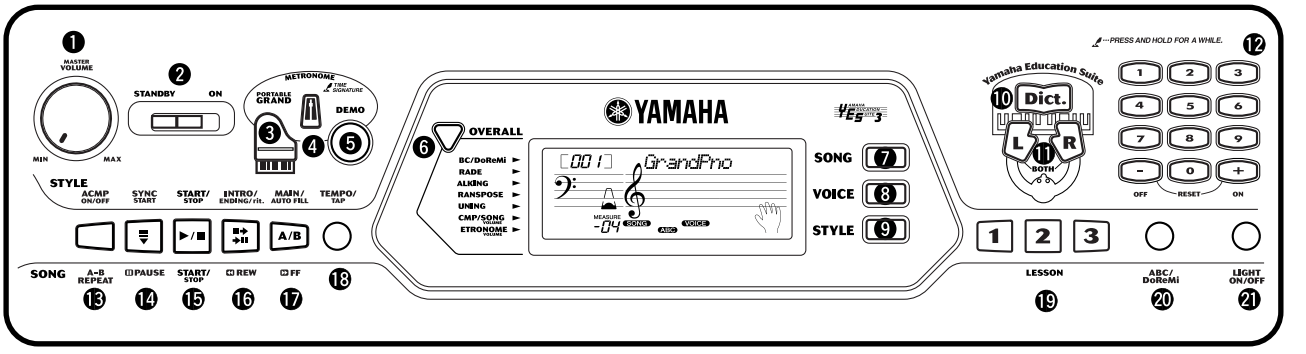

❶ [**MASTER VOLUME**] dial
❷ Power switch ([**STANDBY/ON**])
❸ [**PORTABLE GRAND**] button
❹ [**METRONOME**] button
❺ [**DEMO**] button
❻ [**OVERALL**] button
❼ [**SONG**] button
❽ [**VOICE**] button
❾ [**STYLE**] button
❿ [**Dict.**] (DICTIONARY) button
⓫ **LESSON** [**L**] (Left) and [**R**] (Right) buttons
⓬ Numeric keypad, [**+/ON**] and [**–/OFF**] buttons
⓭ [**ACMP ON/OFF**] / [**A-B REPEAT**] button
⓮ [**SYNC START**] / [**PAUSE**] button
⓯ [**START/STOP**] button
⓰ [**INTRO/ENDING/rit.**] / [**REW**] button
⓱ [**MAIN/AUTO FILL**] / [**FF**] button
⓲ [**TEMPO/TAP**] button
⓳ **LESSON** [**1**]–[**3**] buttons
⓴ [**ABC/DoReMi**] button
㉑ [**LIGHT ON/OFF**] button

● Rear Panel

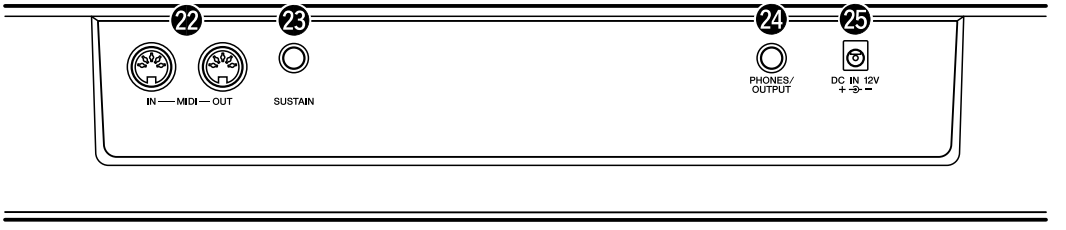

㉒ [**MIDI IN**], [**MIDI OUT**] terminals
㉓ [**SUSTAIN**] jack
㉔ [**PHONES/OUTPUT**] jack
㉕ [**DC IN 12V**] jack

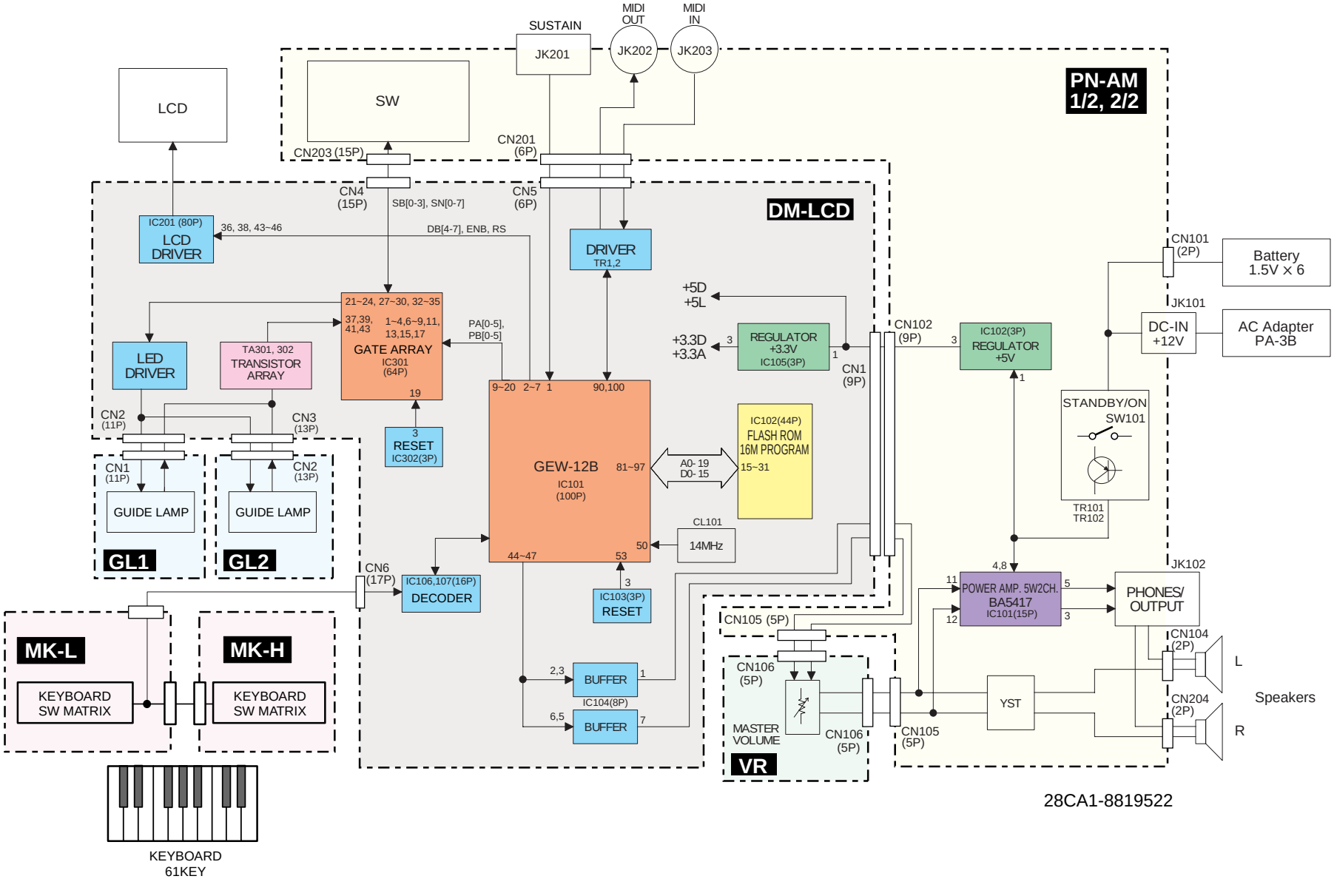

28CA1-8819522

CIRCUIT BOARD LAYOUT & WIRING

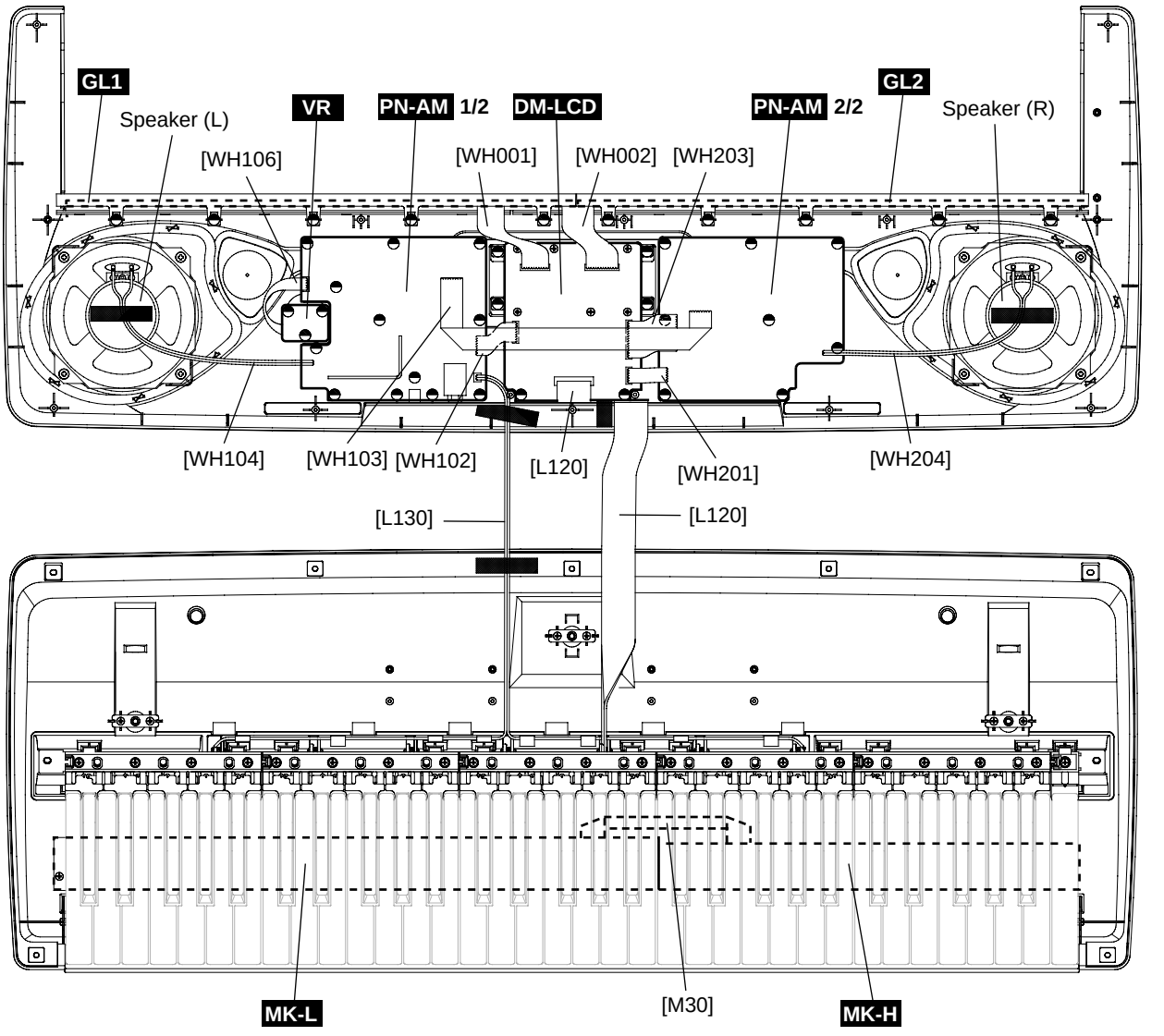

Location	Part No.	Connector Assembly	Destination				Remarks	
WH102	--	AM	PN-AM 1/2-CN102		DM-LCD-CN1	*1	9P L=80	(V744350)
WH103	--	PN2	PN-AM 1/2-CN103		PN-AM 2/2-CN202		9P	(V719710)
WH104	--	SP	PN-AM 1/2-CN104		Speaker L		2P	(V752040)
WH106	--	VR	VR-CN106		PN-AM 1/2-CN105	*1	5P	(V719680)
WH201	--	MIDI	PN-AM 2/2-CN201		DM-LCD-CN5	*1	6P L=70	(V744340)
WH203	--	PN1	PN-AM 2/2-CN203		DM-LCD-CN4	*1	15P L=90	(V744370)
WH204	--	SP	PN-AM 2/2-CN204		Speaker R		2P L=260	(V752040)
WH001	--	GL1	GL1-CN1		DM-LCD-CN2	*1	11P L=100	(V744380)
WH002	--	GL2	GL2-CN2		DM-LCD-CN3	*1	13P L=90	(V744390)
L120	--	MK	MK-L	*1	DM-LCD-CN6	*1	17P	(V718700)
L130	--	BATTRY	PN-AM 1/2-CN101		Battery		2P	(V718670)
M30	--	MK	MK-L		MK-H		11P	(V719030)

* The parts with "--" in "**Part No.**" are not available as spare parts.

*1: Edge mark is adjusted to Pin 1mark (△mark).

DISASSEMBLY PROCEDURE

Caution: Be sure to attach the removed filament tape just as it was before removal.

1. Lower Case Assembly

(Time required: About 5 minutes)

1-1 Remove the battery cover assembly. (Fig. 1)

1-2 Remove the seven (7) screws marked [250] and the five (5) screws marked [260]. The lower case assembly can then be removed. (Fig.1)

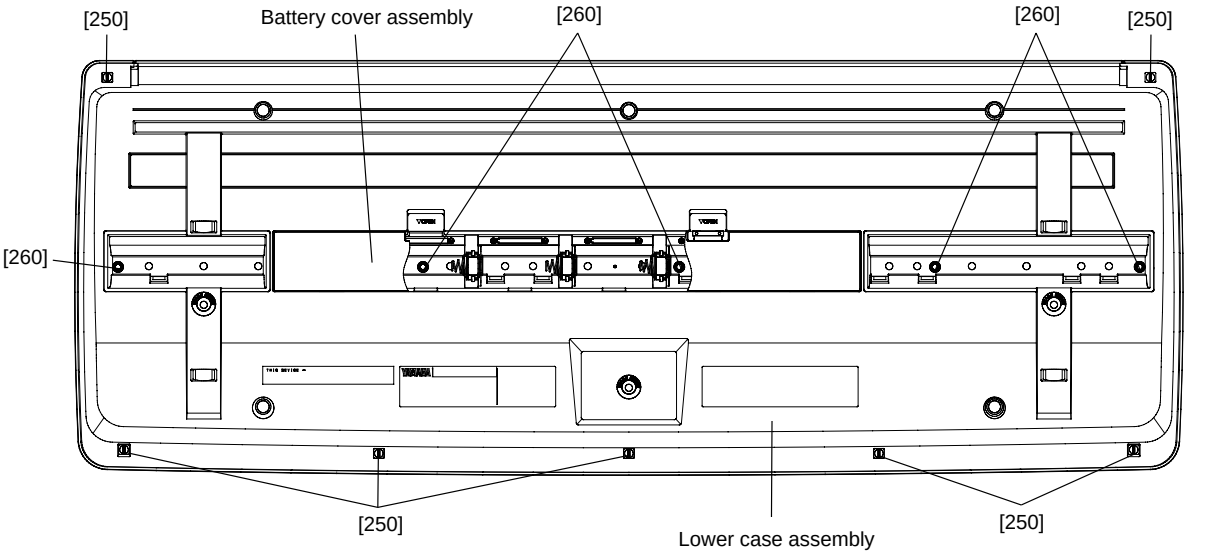

[250]: Bind Head Tapping Screw-B 3.0X12 MFZN2Y (VE683000)
[260]: Bind Head Tapping Screw-B 3.0X30 MFZN2Y (V7213700)

Fig.1

2. Spring Terminal

(Time required : About 10 minutes)

2-1 Remove the lower case assembly. (See procedure 1.)

2-2 Remove the BATTERY connector assembly (red/black) soldered to the spring terminal (+)/(-). (Fig. 2)

2-3 Remove the spring terminal by releasing hooks (2 locations for each). (Fig. 3)

<Top View>

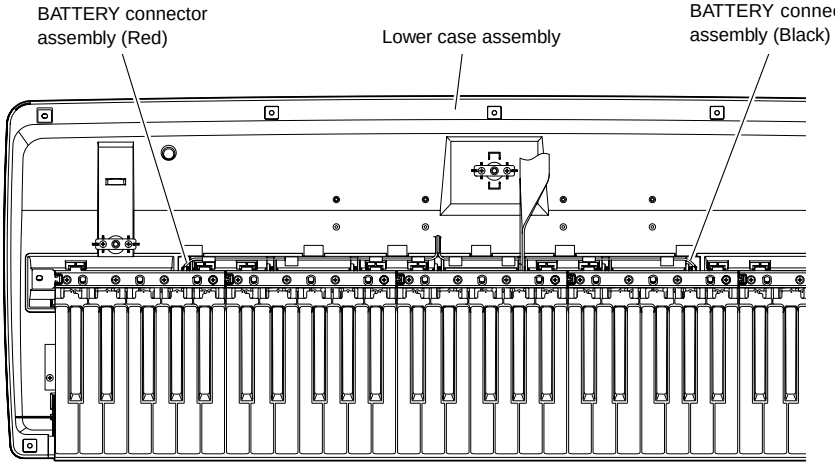

Fig.2

<Bottom View>

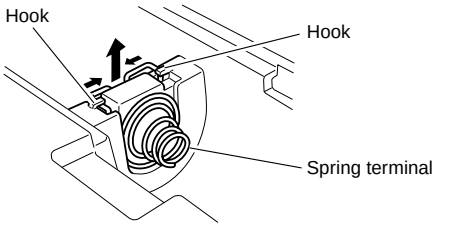

Fig.3

3. PN-AM1/2 and PN-AM2/2 Circuit Boards

(Time required: About 10 minutes each)

3-1 Remove the lower case assembly. (See procedure 1.)

3-2 **PN-AM1/2 Circuit Board:**

3-2-1 Remove the twelve (12) screws marked [240A]. The PN-AM1/2 circuit board can then be removed. (Fig.5)

3-3 **PN-AM2/2 Circuit Board:**

3-3-1 Remove the eight (8) screws marked [240B]. The PN-AM2/2 circuit board can then be removed. (Fig.5)

4. VR Circuit Board

(Time required: About 10 minutes)

4-1 Remove the lower case assembly. (See procedure 1.)

4-2 Remove the volume knob from the control panel side. (Fig.4)

4-3 Remove the three (3) screws marked [240C]. The VR circuit board can then be removed. (Fig.5)

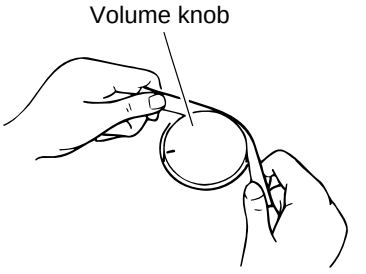

Fig.4

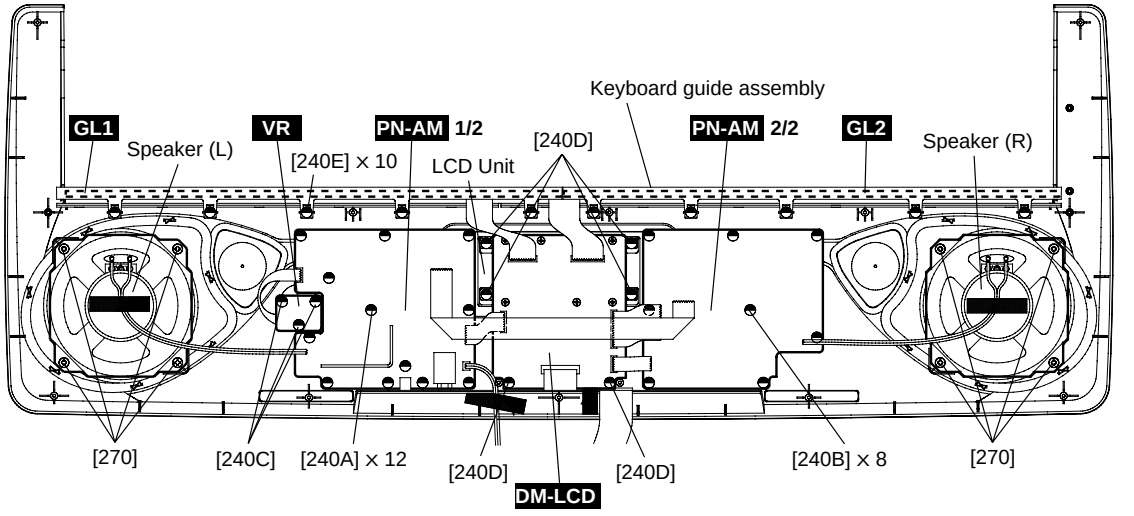

[240]: Bind Head Tapping Screw-B 3.0X8 MFZN2Y (EP600250)
[270]: Bind Head Tapping Screw-B 4.0X8 MFZN2Y (EP640410)

Fig.5

5. LCD Unit and DM-LCD Circuit Board

(Time required: About 10 minutes)

5-1 Remove the lower case assembly. (See procedure 1.)

5-2 Remove the six (6) screws marked [240D]. The LCD unit can then be removed. (Fig.5,6)

5-3 Remove the eight (8) screws marked [D50]. The DM-LCD circuit board can then be removed from the LCD unit. (Fig.5,6)

*** When you install the DM-LCD circuit board, tighten the screws from No.1 to No.8 in order as shown in Figure 6.**

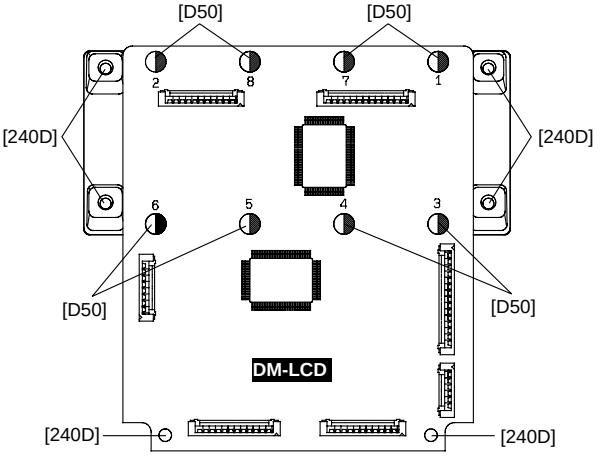

[240D]: Bind Head Tapping Screw-B 3.0X8 MFZN2Y (EP600250)
[D50]: Bind Head Tapping Screw-P 3.0X8 MFZN2Y (EP600280)

Fig.6

6. GL1 and GL2 Circuit Boards

(Time required: About 10 minutes)

6-1 Remove the lower case assembly. (See procedure 1.)

6-2 Remove the ten (10) screws marked [240E]. The keyboard guide assembly can then be removed. (Fig.5)

6-3 Remove the GL1 and GL2 circuit boards from the keyboard guide assembly. (Fig.5)

7. Speakers (Time required: About 10 minutes)

7-1 Remove the lower case assembly. (See procedure 1.)

7-2 Remove the right and left speakers by removing the four (4) screws marked [270] from each speaker. (Fig.5)

8. White key and Black key

(Time required : About 10 minutes each)

8-1 Remove the lower case assembly. (See procedure 1.)

8-2 Remove the four (4) screws marked [110A] fixing the black and white keys for one octave. The black and white keys of each octave can then be removed. (Fig.7) At this time, lift the back of black key with pushing the hooks of it and slide the black key towards you. (Photo 1)

8-3 When removing the C6 key, remove a screw marked [110B] and then lift the back of C6 key with pushing the hook of it and slide it towards you. (Fig.7)

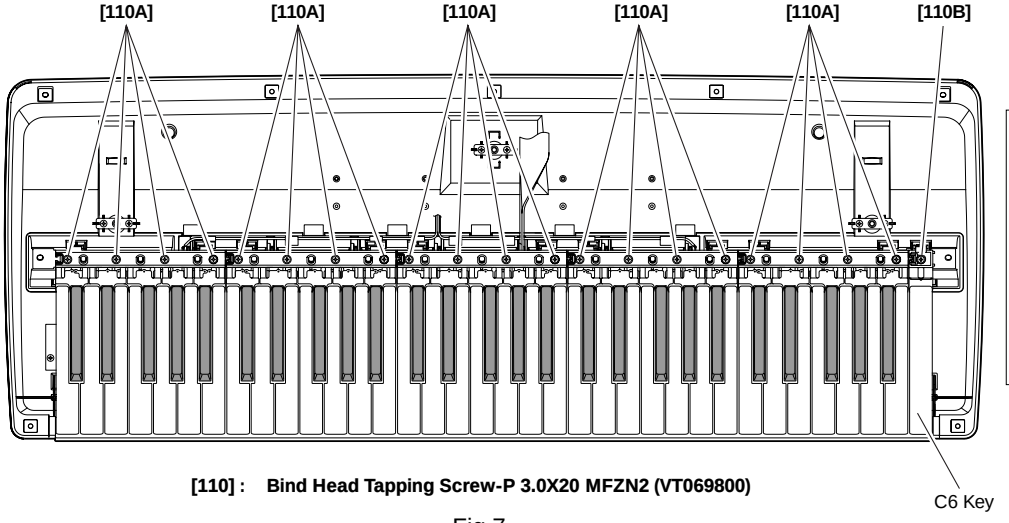

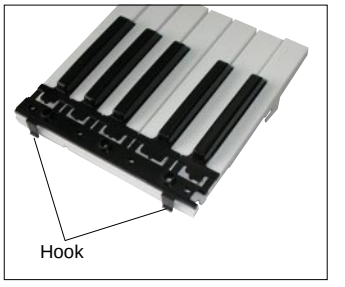

(Photo 1)

[110] : Bind Head Tapping Screw-P 3.0X20 MFZN2 (VT069800)

Fig.7

9. MK-L and MK-H Circuit Boards

(Time required : About 15 minutes each)

9-1 Remove the lower case assembly. (See procedure 1.)

9-2 Remove the black and white keys (C1–B3).(See procedure 8.)
Remove the four (4) screws marked [90A] and the eight (8) screws marked [100A]. The MK-L circuit board can then be removed. (Fig. 8)

9-3 Remove the black and white keys (C4–C6).(See procedure 8.)
Remove the three (3) screws marked [90B] and the five (5) screws marked [100B]. The MK-H circuit board can then be removed. (Fig. 8)

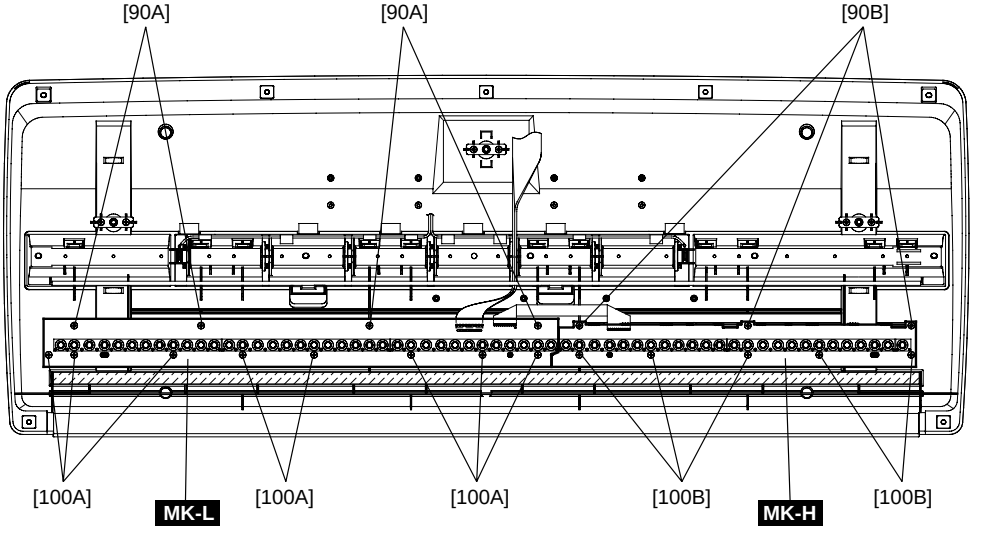

[90]: Bind Head Tapping Screw-B 3.0X8 MFZN2Y (EP600250)
[100]: Bind Head Tapping Screw-P SP 3.0X12 MFZNBL (VZ313100)

Fig.8

■ LSI PIN DESCRIPTION

S6A0069X10-Q0RJ (XV226A00) **LCD DRIVER** 10
YMW728B-F (XV762A00) **GEW12** (AWM Tone Generator) 11
D402117Q (XW159A00) **GATE ARRAY** 12

● **S6A0069X10-Q0RJ** (XV226A00) **LCD DRIVER**

DM-LCD: IC201

PIN No.	NAME	I/O	FUNCTION	PIN No.	NAME	I/O	FUNCTION
1	S22	O	Segment signal output for LCD driving	41	DB2	I/O	Data interface
2	S21	O		42	DB3	I/O	
3	S20	O		43	DB4	I/O	
4	S19	O		44	DB5	I/O	
5	S18	O		45	DB6	I/O	
6	S17	O		46	DB7	I/O	
7	S16	O		47	C1	O	Common signal output for LCD driving
8	S15	O		48	C2	O	
9	S14	O		49	C3	O	
10	S13	O		50	C4	O	
11	S12	O		51	C5	O	
12	S11	O		52	C6	O	
13	S10	O		53	C7	O	
14	S9	O		54	C8	O	
15	S8	O		55	C9	O	
16	S7	O		56	C10	O	
17	S6	O		57	C11	O	
18	S5	O		58	C12	O	
19	S4	O		59	C13	O	
20	S3	O		60	C14	O	
21	S2	O		61	C15	O	
22	S1	O		62	C16	O	
23	Vss		Ground	63	S40	O	Segment signal output for LCD driving
24	osc1	I	Oscillator	64	S39	O	
25	osc	O	Oscillator	65	S38	O	
26	V1		Power supply	66	S37	O	
27	V2			67	S36	O	
28	V3			68	S35	O	
29	V4			69	S34	O	
30	V5			70	S33	O	
31	CLK1	O	Data latch clock	71	S32	O	
32	CLK2	O	Data shift clock	72	S31	O	
33	Vdd		Power supply (5V)	73	S30	O	
34	M	O	Alternated signal for LCD driver output	74	S29	O	
35	D	O	Display data interface	75	S28	O	
36	RS	I		76	S27	O	
37	R/W	I	Read/write	77	S26	O	
38	E	I	Enable	78	S25	O	
39	DB0	I/O		79	S24	O	
40	DB1	I/O		80	S23	O	

● **YMW728B-F** (XV762A00) **GEW12** (AWM Tone Generator) DM-LCD: IC101

PIN NO.	NAME	I/O	FUNCTION	PIN NO.	NAME	I/O	FUNCTION
1	PL0	I/O	Port L	51	DAC_Vdd		Power supply
2	PL1	I/O		52	SYI	I	Synch. signal
3	PL2	I/O		53	ICN	I	Inicial Clear
4	PL3	I/O		54	Vss		Ground
5	PL4	I/O		55	MA19	O	Memory address bus
6	PL5	I/O		56	MA18	O	
7	PL6	I/O		57	MA8	O	
8	Vdd		Power supply	58	Vdd		Power supply
9	PA0	I/O	Port A	59	MA17	O	Memory address bus
10	PA1	I/O		60	MA9	O	
11	PA2	I/O		61	MA7	O	
12	PA3	I/O		62	MA10	O	
13	PA4	I/O		63	MA6	O	
14	PA5	I/O		64	MA11	O	
15	PB0	I/O	Port B	65	Vss		Ground
16	PB1	I/O		66	MA5	O	Memory address bus
17	PB2	I/O		67	MA12	O	
18	PB3	I/O		68	MA4	O	
19	PB4	I/O		69	MA13	O	
20	PB5	I/O		70	MA3	O	
21	Vss		Ground	71	MA14	O	
22	PC0	I/O	Port C	72	Vdd		Power supply
23	PC1	I/O		73	MA2	O	Memory address bus
24	PC2	I/O		74	MA15	O	
25	PC3	I/O		75	MA1	O	
26	PC4	I/O		76	MA16	O	
27	PC5	I/O		77	MA0	O	
28	PD0	I/O	Port D	78	MA20	O	
29	PD1	I/O		79	Vss		Ground
30	PD2	I/O		80	ROMLOEN	O	OEN pin
31	PD3	I/O		81	MD15	I/O	Memory data Input / output
32	PD4	I/O		82	MD0	I/O	
33	PD5	I/O		83	MD7	I/O	
34	Vdd		Power supply	84	MD8	I/O	
35	PE0	I/O	Port E	85	MD14	I/O	
36	PE1	I/O		86	MD1	I/O	
37	PE2	I/O		87	MD6	I/O	
38	PE3	I/O		88	MD9	I/O	
39	PE4	I/O		89	Vdd		Power supply
40	PE5	I/O		90	MD13	I/O	Memory data Input / output
41	TESTE	I	Test Mode E	91	MD2	I/O	
42	TESTD	I	Test Mode D	92	MD5	I/O	
43	Vss		Ground	93	MD10	I/O	
44	DACLMM	O	1bit DAC Output L (-)	94	MD12	I/O	
45	DACLPP	O	1bit DAC Output L (+)	95	MD3	I/O	
46	DACRPP	O	1bit DAC Output R (+)	96	MD4	I/O	
47	DACRMM	O	1bit DAC Output R (-)	97	MD11	I/O	
48	DAC_Vss		Ground	98	Vss		Ground
49	X_O	O	Crystal quarts Output	99	MIDII	I	MIDI Input
50	X_I	I	Crystal quarts Input	100	MIDIO	O	MIDI Output

- **D402117Q** (XW159A00) **GATE ARRAY** DM-LCD: IC301

PIN NO.	NAME	I/O	FUNCTION	PIN NO.	NAME	I/O	FUNCTION
1	DB0	I/O	Two way input/output (Powered)	33	SB1	O	Output
2	DB1	I/O		34	SB2	O	
3	DB2	I/O		35	SB3	O	
4	DB3	I/O		36	VSS11		GND
5	VSS4		GND	37	GB0	O	Output (Open drain)
6	DB4	I/O	Two way input/output (Powered)	38	VSS12		GND
7	DB5	I/O		39	GB1	O	Output (Open drain)
8	DB6	I/O		40	VSS13		GND
9	DB7	I/O		41	GB2	O	Output (Open drain)
10	VSS0		GND	42	VSS2		GND
11	WRH	I	CMOS input (Schmitt trigger, Non-inverted)	43	GB3	O	Output (Open drain)
12	VSS5		GND	44	VSS14		GND
13	WRL	I	CMOS input (Schmitt trigger, Non-inverted)	45	GN0	O	Output
14	VSS6		GND	46	GN1	O	
15	WRB	I	CMOS input (Schmitt trigger, Non-inverted)	47	GN2	O	
16	VSS7		GND	48	GN3	O	
17	RDN	I	CMOS input (Schmitt trigger, Non-inverted)	49	GN4	O	
18	VSS8		GND	50	GN5	O	
19	RESET	I	CMOS input (Schmitt trigger, Non-inverted)	51	VSS15		GND
20	VSS9		GND	52	GN6	O	Output
21	SN0	I	CMOS input (Standard, Non-inverted)	53	GN7	O	
22	SN1	I		54	GN8	O	
23	SN2	I		55	GN9	O	
24	SN3	I		56	GN10	O	
25	VSS1		GND	57	VSS3		GND
26	VDD0		Power supply	58	VDD1		Power supply
27	SN4	I	CMOS input (Standard, Non-inverted)	59	GN11	O	Output
28	SN5	I		60	GN12	O	
29	SN6	I		61	GN13	O	
30	SN7	I		62	GN14	O	
31	VSS10		GND	63	GN15	O	
32	SB0	O	Output	64	VSS16		GND

■ IC BLOCK DIAGRAM

- **HD74LV138AFPEL** (IS013800)
- **SN74LV138ANSR** (IS013810)
  3 to 8 Demultiplexer
  DM-LCD: IC106, 107

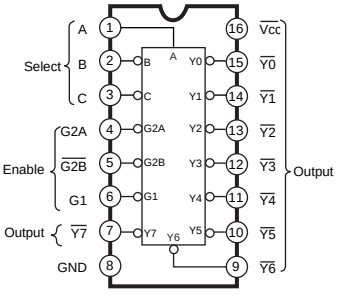

- **µPC4570G2** (XF291A00)
  Dual Operational Amplifier
  DM-LCD: IC104

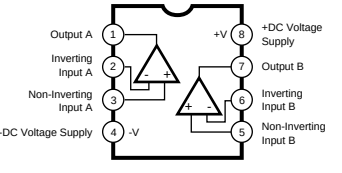

- **BA5417** (XV771A00)
  Power Amplifier
  PN-AM: IC101

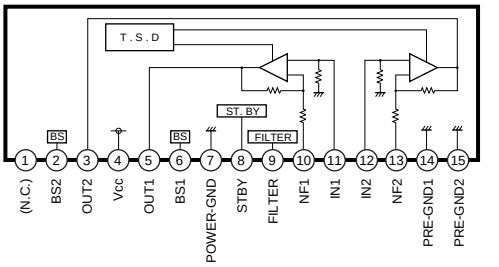

TEST PROGRAM

A. PREPARATION

1) PA-3B (AC adaptor) is used.
2) The volume is usually moved to the use position when no volume change is required.
3) Measuring instruments: frequency counter, level meter (with JIS-C filter)
   Note: Connect a stereo plug to the [PHONES/OUTPUT] jack at 33 ohms.
4) Jigs: foot switch, MIDI cable

B. HOW TO ENTER THE TEST PROGRAM

While pressing the C2#, F2 and G2# keys, turn the [STANDBY/ON] switch on.

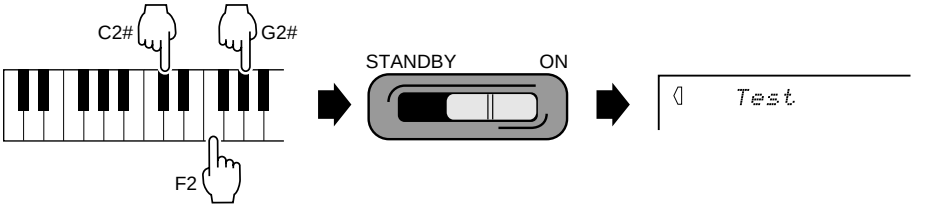

C. PROCEEDING THROUGH THE TEST PROGRAM

1) When the test program is started, “TEST” appears on the LCD.
2) Select the test program item to be executed by pressing the [-/OFF] or [+/ON] button.
3) Press the [START/STOP] button to execute testing.

- When the test result is OK, press the [START/STOP] button to return to the test item name on display.
  Proceed to the next test by pressing the [-/OFF] or [+/ON] button.
  When the test result is OK, a cursor (_) is added under the first character of the test item name on display.

- When the test result is NG, press the lowest (leftmost) white key on the keyboard to return to the test item name on display and then turn off the [STANDBY/ON] switch to end the test program.

D. TEST PROGRAM LIST

TEST No.	LCD (initial)	Test Functions and Judgment Criteria
1	[001] Version	Displays ROM version. ROM (Program) version is displayed on the LCD.
2	[002] Rom Chk1	Checks the ROM. The test results appear on the LCD.
3	[003] Ram Chk1	Checks the RAM. (GEW12) The test results appear on the LCD.
11	[011] TG1 Chk1	Outputs the sine wave by changing the channels in sequence from C2 to D#3. After auto-scaling is finished, individual keys can be played. (If playing two or more keys simultaneously, the first pressed key has priority to make a sound.)
13	[013] Pit Chk	Connect the frequency counter to the [PHONES/OUTPUT] jack. Sets PAN to Center and produces a signal at 440.0 Hz +/- 1.76 Hz Check that the correct signal is produced.
14	[014] Output R	Connect the level meter (with a JIS-C filter) to the [PHONES/OUTPUT] jack. (33 ohm load) Set the [MASTER VOLUME] at maximum and check the output level (1 kHz). PHONES L: less than -60.0 dBm PHONES R: -24.5 dBm +/- 2dB
15	[015] Output L	Connect the level meter (with a JIS-C filter) to the [PHONES/OUTPUT] jack. (33 ohm load) Set the [MASTER VOLUME] at maximum and check the output level (1 kHz). PHONES L: -24.5 dBm +/- 2dB PHONES R: less than -60.0 dBm
19	[019] Noise	Connect the level meter (with a JIS-C filter) to the [PHONES/OUTPUT] jack. (33 ohm load) Set the [MASTER VOLUME] at maximum. Check D/A converter noise. PHONES L/R: less than -75.0 dBm
20	[020] SW Chk	Check the switches on the panel. Press the switches on the LCD as instructed. A pre-assigned note is output when the switch is pressed.(See table 1.) As the check result appears on the LCD when all the switches are pressed as instructed. Check that OK is displayed. (To stop this check before reaching its end, press the [START/STOP] button to return to the test item name on display.)

25	[025] K LED	Check that the all keyboard LEDs are on. The keyboard LEDs from C1 to B1 light up. Make sure that pressing the highest (rightmost) white key on the keyboard causes the all keyboard LEDs to light up in this sequence: LEDs from C2 to B2, LEDs from C3 to B3, LEDs from C4 to B4, LEDs from C5 to B5, LED of C6.
26	[026] K R.LED	Check that the all white key LEDs are on. (Red LED) The white key LEDs from C1 to B1 light up. Make sure that pressing the highest (rightmost) white key on the keyboard causes the all white key LEDs to light up in this sequence: LEDs from C2 to B2, LEDs from C3 to B3, LEDs from C4 to B4, LEDs from C5 to B5, LED of C6.
27	[027] K Y.LED	Check that the all black key LEDs are on. (Yellow LED) The black key LEDs from C1# to A1# light up. Make sure that pressing the highest (rightmost) white key on the keyboard causes the all black key LEDs to light up in this sequence: LEDs from C2# to A2#, LEDs from C3# to A3#, LEDs from C4# to A4#, LEDs from C5# to A5#.
28	[028] LCD On	Check that all LCD dots are on.
29	[029] LCD Off	Check that all LCD dots are off.
31	[031] PD1 Chk	Connect the foot switch (FC-4 or FC-5) to the [SUSTAIN] jack. Check that the C3 note is output when pressing the [START/STOP] button while pressing the pedal and the C4 note is output when releasing the pedal.
37	[037] MIDI Chk	After connecting the [MIDI IN] jack and [MIDI OUT] jack with a MIDI cable, execute the test. Check that the C4 note is output and that the test results appear on the LCD.
41	[041] Rom Chk2	Checks the ROM. The test results appear on the LCD.
42	[042] Ram Chk2	Checks the RAM. (GEW12) The test results appear on the LCD.
48	[048] TestExit	Exit from the test program after executing this test.

* NOTE: Time is required to complete the checks performed by test No. 41, 42.

TABLE 1

ORDER	SWITCH	LCD	NOTE
1	PORTABLE GRAND	GrandPia	C3
2	METRONOME	Metro	C#3
3	DEMO	Demo	D3
4	OVERALL	Overall	D#3
5	SONG	Song	E3
6	VOICE	Voice	F3
7	STYLE	Style	F#3
8	Dict.	Dict.	G3
9	LESSON L	Lesson L	G#3
10	LESSON R	Lesson R	A3
11	Tenkey 1	Tenkey 1	A#3
12	Tenkey 2	Tenkey 2	B3
13	Tenkey 3	Tenkey 3	C4
14	Tenkey 4	Tenkey 4	C#4
15	Tenkey 5	Tenkey 5	D4
16	Tenkey 6	Tenkey 6	D#4
17	Tenkey 7	Tenkey 7	E4

ORDER	SWITCH	LCD	NOTE
18	Tenkey 8	Tenkey 8	F4
19	Tenkey 9	Tenkey 9	F#4
20	Tenkey -	Tenkey -	G4
21	Tenkey 0	Tenkey 0	G#4
22	Tenkey +	Tenkey +	A4
23	ACMP ON/OFF	Accomp	A#4
24	SYNC START	Sync Str	B4
25	START/STOP	Str/Stp	C5
26	INTRO/ENDING	Int/End	C#5
27	MAIN A/B	Main AB	D5
28	TEMPO/TAP	Tempo	D#5
29	LESSON 1	Lesson 1	E5
30	LESSON 2	Lesson 2	F5
31	LESSON 3	Lesson 3	F#5
32	ACB/DoReMi	Doremi	G5
33	LIGHT ON /OFF	L_Guide	G#5

YAMAHA [Portable Keyboard] Date:26-JAN-2001
Model EZ-20 MIDI Implementation Chart Version : 1.0

Function...		Transmitted	Recognized	Remarks
Basic Channel	Default	1 - 7,10	1 - 7,10	
	Changed	x	x	
Mode	Default	3	3	
	Messages	x	x	
	Altered	**********	x	
Note Number	: True voice	0 - 127 **********	0 - 127 0 - 127	
Velocity	Note ON	o 9nH,v=1-127 *1	o 9nH,v=1-127	
	Note OFF	x 9nH,v=0	x 9nH,v=0 or 8nH	
After Touch	Key's	x	x	
	Ch's	x	x	
Pitch Bend		x	x	
Control Change	0,32	o *2	o *2	Bank Select LSB,MSB
	7	o	o	Volume
	10	o	o	Pan
	6,38	x	x	Data Entry
	64	o	o	Sustain
	71-74	x	x	
	84	o	o	Portamento Cntrl
	91,93,94	x	x	
	96-97	x	x	RPN Inc,Dec
	98,99	x	x	NRPN LSB,MSB
	100-101	x	x	RPN LSB,MSB
Prog Change	: True #	o 0 - 127 *3 **********	o 0 - 127 *3 *3	
System Exclusive		o *4	o *4	
Common	: Song Pos.	x	x	
	: Song Sel.	x	x	
	: Tune	x	x	
System Real Time	:Clock	x	x	
	:Commands	x	x	
Aux Mes- sages	:All Sound OFF	x	x	
	:Reset All Cntrls	x	x	
	:Local ON/OFF	x	x	
	:All Notes OFF	x	x	
	:Active Sense	o	o	
	:Reset	x	x	

Mode 1 : OMNI ON , POLY Mode 2 : OMNI ON ,MONO o : Yes
Mode 3 : OMNI OFF, POLY Mode 4 : OMNI OFF,MONO x : No

PORTATONE
EZ-20
PARTS LIST

CONTENTS

OVERALL ASSEMBLY 2
KEYBOARD GUIDE ASSEMBLY 4
KEYBOARD ASSEMBLY 5
ELECTRICAL PARTS 6

Notes : DESTINATION ABBREVIATIONS

A : Australian model	M : South African model
B : British model	O : Chinese model
C : Canadian model	Q : South-east Asia model
D : German model	T : Taiwan model
E : European model	U : U.S.A. model
F : French model	V : General export model (110V)
H : North European model	W: General export model (220V)
I : Indonesian model	N,X: General export model
J : Japanese model	Y : Export model

WARNING

Components having special characteristics are marked ⚠ and must be replaced with parts having specification equal to those originally installed.

- The numbers “QTY” show quantities for each unit.
- The parts with “--” in “**PART NO.**” are not available as spare parts.
- This mark “ } ” in the REMARKS column means these parts are interchangeable.
- The second letter of the shaded (▭) part number is O, not zero.
- The second letter of the shaded (▭) part number is I, not one.

OVERALL ASSEMBLY

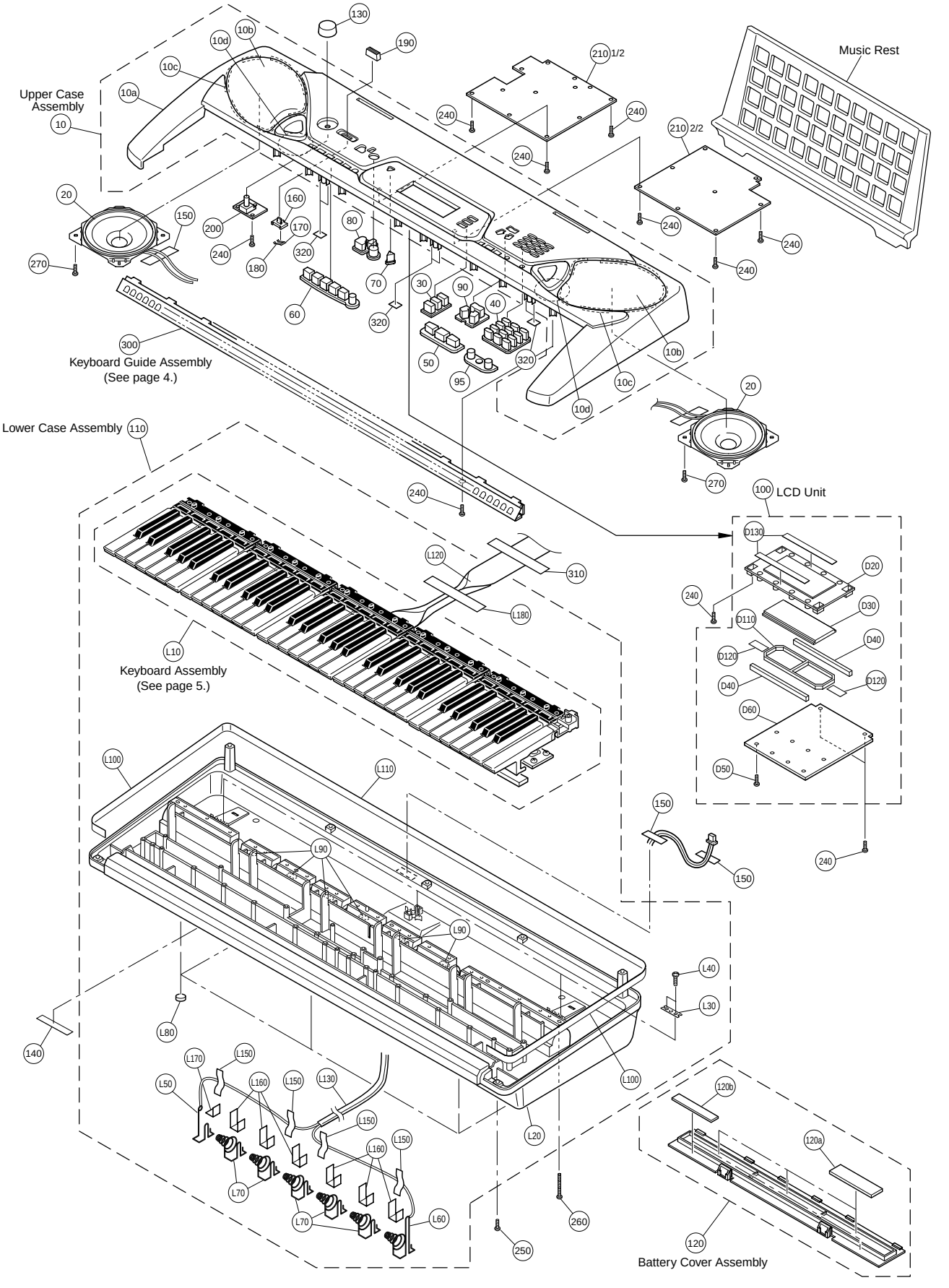

	REF NO.	PART NO.	DESCRIPTION			REMARKS	QTY	RANK
		--	OVERALL ASSEMBLY			EZ-20 (V743510)		
*	10	V7442200	Upper Case Assembly					
	10a	--	Upper Case			(V744180)		
*	10b	V7091300	Speaker Grille				2	
	10c	--	Nonworen Fabric Cloth			(V719960)	14	
	10d	--	Nonworen Fabric Cloth	40		(V529660)	2	
	20	XN789B00	Speaker	12.0cm 4 ohm 5W			2	05
*	30	V7031700	Panel Switch	3 DOME BLACK		SONG,VOICE,STYLE		
*	40	V7202300	Panel Switch	12 DOME WHITE		0-9,OFF/-,ON/+		
*	50	V7032000	Panel Switch	3 DOME		LESSON 1-3		
*	60	V7032200	Panel Switch	6 DOME BLACK		ACMP ON/OFF,SYNC START, START/STOP,INTRO/ENDING/rit., MAIN/AUTO FILL,TEMPO/TAP		
*	70	V7032300	Panel Switch	1 DOME BLACK		OVERALL		
*	80	V7381200	Panel Switch	3 DOME PINK		METRONOME,PORTABLE GRAND, DEMO		
*	90	V7381300	Panel Switch	3 DOME		Dict.,LESSON L,LESSON R		
*	95	V7031800	Panel Switch	2 DOME BLACK		ABC/DoReMi,LIGHT ON/OFF		
	100	--	LCD Unit	V1		(V744190)		
	110	--	Lower Case Assembly			(V702430)		
	120	V7042300	Battery Cover Assembly	BLACK				
	120a	--	Battery Cushion	WHITE		(V710060)	3	
	120b	--	Cushion	PE		(V796870)	2	
	130	VU432400	Knob Black			MASTER VOLUME		01
	140	--	Label	FE		(V744200)		
	150	VA126100	Adhesive Tape	12X50			4	03
	160	VF073800	Slider	LC				01
	170	BB005650	Brush	YCUT-MEH				02
	180	VA010200	Grease	G-902 1kg				40
	190	VV490600	Knob Black			STANDBY/ON		03
*	200	V7372200	Circuit Board	VR				
*	210	V7372000	Circuit Board	PN-AM (1/2,2/2)				
	240	EP600250	Bind Head Tapping Screw-B	3.0X8 MFZN2Y			39	01
	250	VE683000	Bind Head Tapping Screw-B	3.0X12 MFZN2Y			7	01
*	260	V7213700	Bind Head Tapping Screw-B	3.0X30 MFZN2Y			5	
	270	EP640410	Bind Head Tapping Screw-B	4.0X8 MFZN2Y			8	01
	300	--	Keyboard Guide Assembly			(V744230)		
	310	--	Adhesive Tape	12X90		(V591240)	2	
	320	--	Nonworen Fabric Cloth	14X6		(V789860)	6	
		--	LCD Unit			(V744190)		
	D20	V5339000	LCD Panel	TYPE-A				01
*	D30	V6968100	LCD	TTR5442 TYPE-V1				
	D40	V3755900	Rubber Connector	SS-105L			2	01
	D40	V5415400	Rubber Connector	SS-105L			2	
	D50	EP600280	Bind Head Tapping Screw-P	3.0X8 MFZN2Y			8	01
*	D60	V7371800	Circuit Board	DM-LCD				
*	D110	V7172200	LCD Holder	A				
	D120	VA119300	Adhesive Tape	12X25			2	01
	D130	--	Nonworen Fabric Cloth	95X8X0.5		(V706870)	2	
		--	Lower Case Assembly			(V702430)		
	L10	--	Keyboard Assembly	16N C61 P1M		(V709960)		
*	L20	V6997500	Lower Case					
	L30	VI104400	Holder	CH			3	
	L40	EP600250	Bind Head Tapping Screw-B	3.0X8 MFZN2Y			6	01
	L50	V7060500	Terminal	(+)				
	L60	V7060700	Spring Terminal	(-)				
	L70	V7060200	Spring Terminal	(+/-)			5	
	L80	CB043750	Foot Black	T=1.6			5	01
	L90	--	Nonworen Fabric Cloth			(V720600)	6	
	L100	--	Cushion	360X15X1.0		(V642100)	2	
	L110	--	Cushion	885X15X1.0		(V642110)		
	L120	--	Connector Assembly	MK 17P		(V718700)		
	L130	--	Connector Assembly	BATTERY XH 2P		(V718670)		
	L150	VA126100	Adhesive Tape	12X50			4	03
	L160	--	Nonworen Fabric Cloth	40X13		(V771130)	6	
	L170	--	Nonworen Fabric Cloth	13X13		(V771140)		
	L180	--	Adhesive Tape	12X90		(V591240)		
			ACCESSORY					
		V2115000	Music Rest					06

*: New Parts

RANK: Japan only

KEYBOARD GUIDE ASSEMBLY

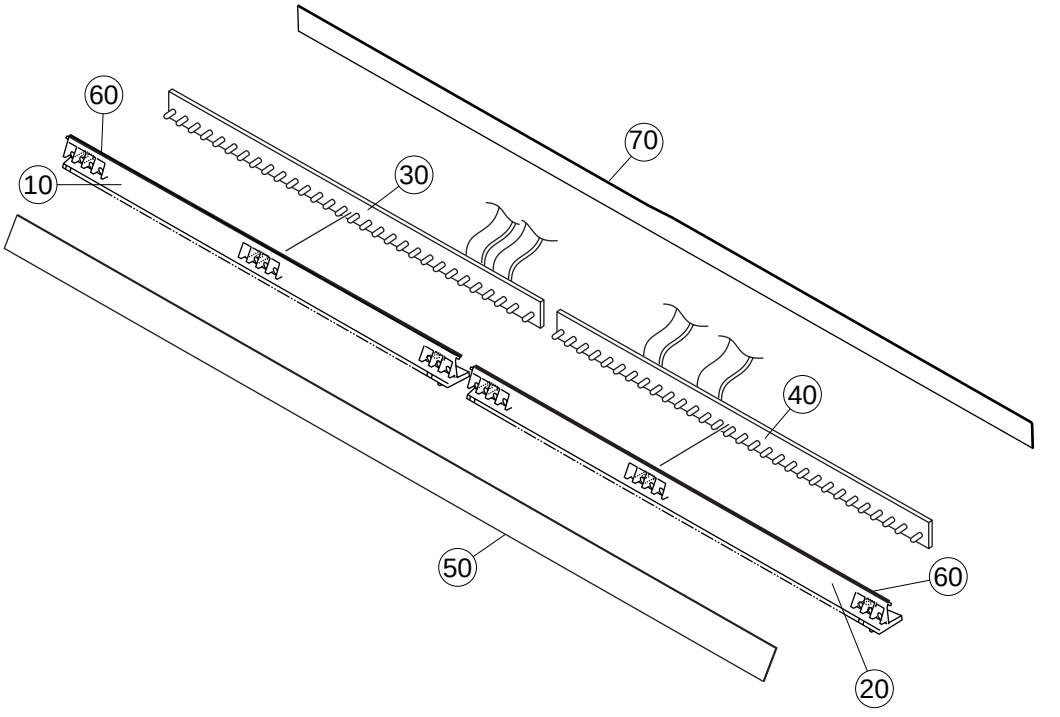

	REF NO.	PART NO.	DESCRIPTION			REMARKS	QTY	RANK
		--	KEYBOARD GUIDE ASSEMBLY			EZ-20 (V744230)		
*	10	**V7418700**	Keyboard Guide L	WHITE				
*	20	**V7418800**	Keyboard Guide R	WHITE				
*	30	**V7384200**	Circuit Board	GL1				
*	40	**V7384400**	Circuit Board	GL2				
*	50	**V7442400**	Panel Sheet					06
	60	--	Nonworen Fabric Cloth			(V775770)	2	
	70	--	Cushion	840X15X1		(V774460)		

*: New Parts

RANK: Japan only

KEYBOARD ASSEMBLY

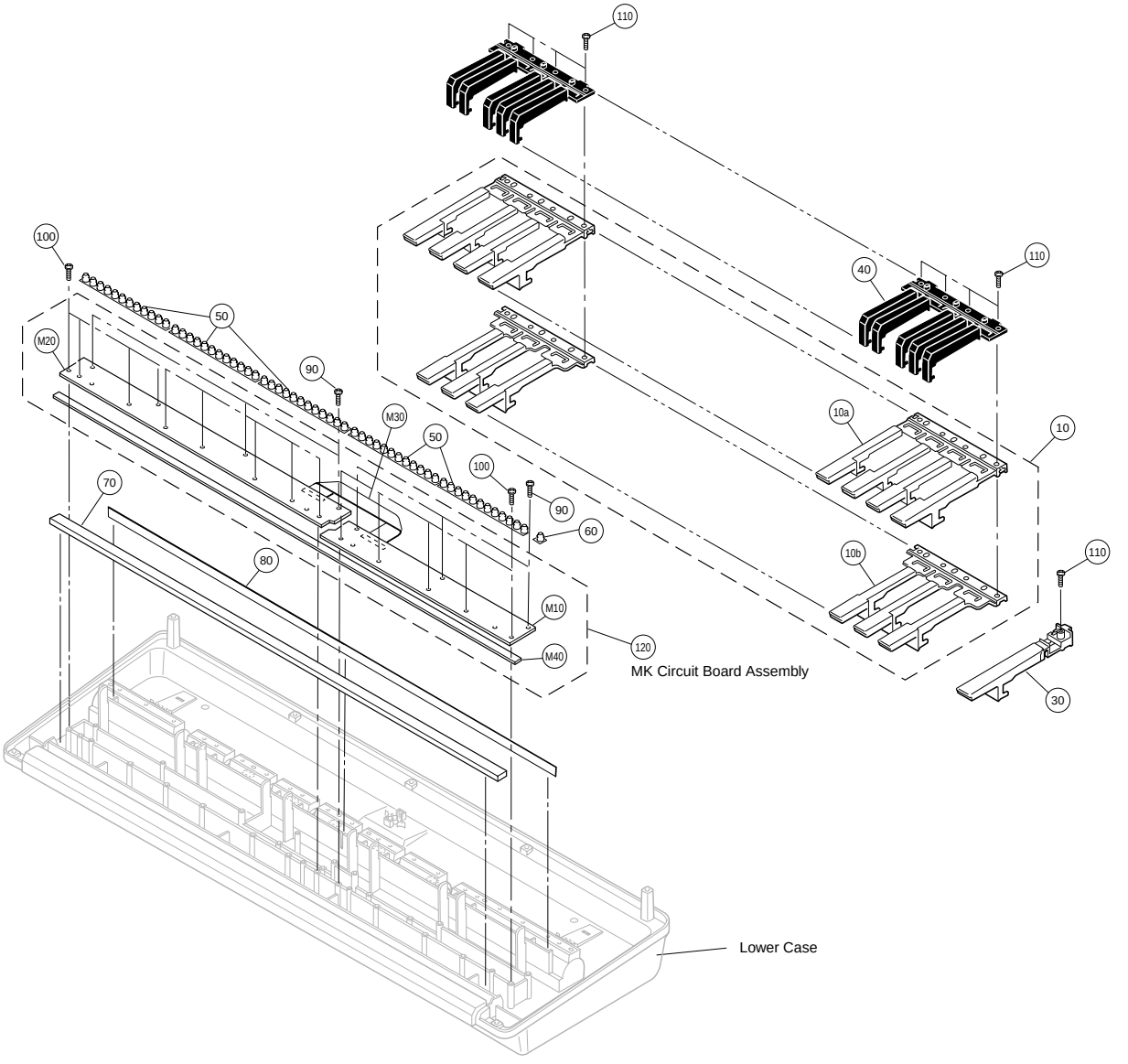

REF NO.	PART NO.	DESCRIPTION			REMARKS	QTY	RANK
	--	KEYBOARD ASSEMBLY	16N C61 P1M		EZ-20 (V709960)		
10	V34107A0	White Keys	16N CEGBDFA			5	04
10a	--	White Keys	16N CEGB		(V341260)	5	
10b	--	White Keys	16N DFA		(V341270)	5	
30	V4760300	White Key	16N C'				
40	VZ271700	Black Key	16N			5	06
50	VZ271800	Rubber Contact	16N-1M OCT 1M			5	05
60	VZ271900	Rubber Contact	16N-1M C' 1M				04
70	VZ303000	Felt L	16N				02
80	V7100100	Rubber Support	16N L832				
90	EP600250	Bind Head Tapping Screw-B	3.0X8 MFZN2Y			7	01
100	VZ313100	Bind Head Tapping Screw-P	SP 3.0X12 MFZNBL			13	01
110	VT069800	Bind Head Tapping Screw-P	3.0X20 MFZN2			21	01
120	--	MK Circuit Board Assembly	16N1M C61 P1		(V718920)		
	--	MK Circuit Board Assembly	16N1M C61 P1		(V718920)		
M10	VZ272400	Circuit Board	MK-H				09
M20	V7189900	Circuit Board	MK-L				
M30	--	Connector Assembly	MK 16N-1M-C61		(V719030)		
M40	VZ302900	Felt U	16N				02

✻: New Parts

RANK: Japan only

■ ELECTRICAL PARTS

	REF NO.	PART NO.	DESCRIPTION			REMARKS	QTY	RANK
			ELECTRICAL PARTS			EZ-20		
*		**V7371800**	Circuit Board	DM-LCD		(XZ645C0)		
*		**V7384200**	Circuit Board	GL1		(XZ990B0)		
*		**V7384400**	Circuit Board	GL2		(XZ991B0)		
		VZ272400	Circuit Board	MK-H		(XT701A0)		09
		V7189900	Circuit Board	MK-L		(XZ850A0)		
*		**V7372000**	Circuit Board	PN-AM (1/2,2/2)		(XZ989B0)		
*		**V7372200**	Circuit Board	VR		(XZ989B0)		
*		**V7371800**	Circuit Board	DM-LCD		(XZ645C0)		
	C0101	**US135100**	Ceramic Capacitor-F (chip)	0.1000 16V Z				01
	-0106	**US135100**	Ceramic Capacitor-F (chip)	0.1000 16V Z				01
	C0107	**UF017220**	Electrolytic Cap. (chip)	22 6.3V				01
	C0108	**US135100**	Ceramic Capacitor-F (chip)	0.1000 16V Z				01
	C0109	**US063150**	Ceramic Capacitor-B (chip)	1500P 50V K				01
	-0114	**US063100**	Ceramic Capacitor-B (chip)	1000P 50V K				01
	C0115	**UF017220**	Electrolytic Cap. (chip)	22 6.3V				01
	C0116	**UR838470**	Electrolytic Cap.	470.00 16.0V				01
	C0117	**UF046470**	Electrolytic Cap. (chip)	4.7 25V				01
	C0118	**UF046470**	Electrolytic Cap. (chip)	4.7 25V				01
	C0119	**US064100**	Ceramic Capacitor-B (chip)	0.0100 50V K				01
	C0120	**US064100**	Ceramic Capacitor-B (chip)	0.0100 50V K				01
	C0121	**US135100**	Ceramic Capacitor-F (chip)	0.1000 16V Z				01
	C0122	**US135100**	Ceramic Capacitor-F (chip)	0.1000 16V Z				01
	C0123	**UF018100**	Electrolytic Cap. (chip)	100 6.3V				01
	C0124	**US135100**	Ceramic Capacitor-F (chip)	0.1000 16V Z				01
	-0129	**US135100**	Ceramic Capacitor-F (chip)	0.1000 16V Z				01
	C0130	**US062100**	Ceramic Capacitor-SL(chip)	100P 50V J				01
	C0131	**US062100**	Ceramic Capacitor-SL(chip)	100P 50V J				01
	C0132	**US135100**	Ceramic Capacitor-F (chip)	0.1000 16V Z				01
	C0139	**US062470**	Ceramic Capacitor-SL(chip)	470P 50V J				01
	-0155	**US062470**	Ceramic Capacitor-SL(chip)	470P 50V J				01
	C0201	**US135100**	Ceramic Capacitor-F (chip)	0.1000 16V Z				01
	C0202	**US135100**	Ceramic Capacitor-F (chip)	0.1000 16V Z				01
	C0301	**US062100**	Ceramic Capacitor-SL(chip)	100P 50V J				01
	-0329	**US062100**	Ceramic Capacitor-SL(chip)	100P 50V J				01
	C0330	**US135100**	Ceramic Capacitor-F (chip)	0.1000 16V Z				01
	-0333	**US135100**	Ceramic Capacitor-F (chip)	0.1000 16V Z				01
	C0334	**US062100**	Ceramic Capacitor-SL(chip)	100P 50V J				01
	C0335	**US062100**	Ceramic Capacitor-SL(chip)	100P 50V J				01
	C0336	**US135100**	Ceramic Capacitor-F (chip)	0.1000 16V Z				01
	C0337	**US135100**	Ceramic Capacitor-F (chip)	0.1000 16V Z				01
	CL101	**V2905100**	Ceramic Resonator	14M CST14.00MXW140		}		01
	CL101	**V3522500**	Ceramic Resonator	14M EFOEX1405E38		}		01
	CN001	**VK025300**	Wire Trap	52147 9P TE				01
	CN002	**VK025500**	Wire Trap	52147 11P TE				01
	CN003	**VK025700**	Wire Trap	52147 13P TE				01
	CN004	**VF667600**	Wire Trap	52147 15P TE				01
	CN005	**VF728300**	Wire Trap	52147 6P TE				01
	CN006	**VG924500**	Wire Trap	52328 17P TE				02
	D0301	**VT332900**	Diode	1SS355 TE-17				01
	-0306	**VT332900**	Diode	1SS355 TE-17				01
	IC101	**XV762A00**	IC	YMW728B-F		GEW12		08
*	IC102	**X0062100**	IC	MX33L1610MC-10		MASK ROM 16M PROGRAM		
*	IC103	**XZ625A00**	IC	M62722ML		SYSTEM RESET		01
	IC104	**XF291A00**	IC	UPC4570G2		OP AMP		03
	IC105	**XU965A00**	IC	UPC29M33T-E1		REGULATOR +3.3V		03
	IC106	**IS013800**	IC	HD74LV138AFPEL		} DECODER		01
	IC106	**IS013810**	IC	SN74LV138ANSR		}		01
	IC107	**IS013800**	IC	HD74LV138AFPEL		} DECODER		01
	IC107	**IS013810**	IC	SN74LV138ANSR		}		01
	IC201	**XV226A00**	IC	S6A0069X10-Q0RJ		LCD DRIVER		05
	IC301	**XW159A00**	IC	D402117Q		GATE ARRAY		05
*	IC302	**X0061A00**	IC	M62742ML		SYSTEM RESET		01
	L0001	**VY657200**	Chip Inductance	600 BK1608HM601		}		01
	L0001	**V3063400**	Chip Inductance	BLM11B601S 1608		}		01
	L0003	**VY657200**	Chip Inductance	600 BK1608HM601		}		01
	L0003	**V3063400**	Chip Inductance	BLM11B601S 1608		}		01
	L0006	**VY657200**	Chip Inductance	600 BK1608HM601		}		01
	L0006	**V3063400**	Chip Inductance	BLM11B601S 1608		}		01

*: New Parts

RANK: Japan only

	REF NO.	PART NO.	DESCRIPTION			REMARKS	QTY	RANK
	L0008	**VY657200**	Chip Inductance	600 BK1608HM601				01
	L0008	**V3063400**	Chip Inductance	BLM11B601S 1608				01
	L0009	**VY657200**	Chip Inductance	600 BK1608HM601				01
	L0009	**V3063400**	Chip Inductance	BLM11B601S 1608				01
	L0011	**VY657200**	Chip Inductance	600 BK1608HM601				01
	L0011	**V3063400**	Chip Inductance	BLM11B601S 1608				01
	L0101	**VY657200**	Chip Inductance	600 BK1608HM601				01
	L0101	**V3063400**	Chip Inductance	BLM11B601S 1608				01
	L0102	**VY657200**	Chip Inductance	600 BK1608HM601				01
	L0102	**V3063400**	Chip Inductance	BLM11B601S 1608				01
	R0101	**RD357470**	Carbon Resistor (chip)	47K 63M J				01
	-0119	**RD357470**	Carbon Resistor (chip)	47K 63M J				01
	R0126	**RD359100**	Carbon Resistor (chip)	1.0M 63M J				01
	R0127	**RD357150**	Carbon Resistor (chip)	15K 63M J				01
	-0130	**RD357150**	Carbon Resistor (chip)	15K 63M J				01
	R0131	**RD357220**	Carbon Resistor (chip)	22K 63M J				01
	R0132	**RD357100**	Carbon Resistor (chip)	10K 63M J				01
	R0133	**RD357220**	Carbon Resistor (chip)	22K 63M J				01
	R0134	**RD357100**	Carbon Resistor (chip)	10K 63M J				01
	R0135	**RD354470**	Carbon Resistor (chip)	47 63M J				01
	R0136	**RD357220**	Carbon Resistor (chip)	22K 63M J				01
	R0137	**RD357100**	Carbon Resistor (chip)	10K 63M J				01
	R0138	**RD357220**	Carbon Resistor (chip)	22K 63M J				01
	R0139	**RD357100**	Carbon Resistor (chip)	10K 63M J				01
	R0140	**RD356220**	Carbon Resistor (chip)	2.2K 63M J				01
	R0141	**RD355680**	Carbon Resistor (chip)	680 63M J				01
	R0142	**RD355150**	Carbon Resistor (chip)	150 63M J				01
	R0143	**RD355150**	Carbon Resistor (chip)	150 63M J				01
	R0144	**RD357100**	Carbon Resistor (chip)	10K 63M J				01
	R0145	**RD357220**	Carbon Resistor (chip)	22K 63M J				01
	R0146	**RD357220**	Carbon Resistor (chip)	22K 63M J				01
	R0148	**RD357100**	Carbon Resistor (chip)	10K 63M J				01
	R0149	**RD357470**	Carbon Resistor (chip)	47K 63M J				01
	R0150	**RD355100**	Carbon Resistor (chip)	100 63M J				01
	-0160	**RD355100**	Carbon Resistor (chip)	100 63M J				01
	R0161	**RD350000**	Carbon Resistor (chip)	0 63M J				01
	-0166	**RD350000**	Carbon Resistor (chip)	0 63M J				01
	R0201	**RD355220**	Carbon Resistor (chip)	220 63M J				01
	R0202	**RD354680**	Carbon Resistor (chip)	68 63M J				01
	R0203	**RD357910**	Carbon Resistor (chip)	91K 63M J				01
	R0204	**RD356220**	Carbon Resistor (chip)	2.2K 63M J				01
	-0208	**RD356220**	Carbon Resistor (chip)	2.2K 63M J				01
	R0301	**RD357470**	Carbon Resistor (chip)	47K 63M J				01
	-0308	**RD357470**	Carbon Resistor (chip)	47K 63M J				01
	R0309	**RD357100**	Carbon Resistor (chip)	10K 63M J				01
	-0313	**RD357100**	Carbon Resistor (chip)	10K 63M J				01
	R0314	**RD356100**	Carbon Resistor (chip)	1.0K 63M J				01
	R0315	**RD356100**	Carbon Resistor (chip)	1.0K 63M J				01
	R0316	**RD357100**	Carbon Resistor (chip)	10K 63M J				01
	R0317	**RD356100**	Carbon Resistor (chip)	1.0K 63M J				01
	R0318	**RD356100**	Carbon Resistor (chip)	1.0K 63M J				01
	R0319	**RD357100**	Carbon Resistor (chip)	10K 63M J				01
	R0320	**RD356100**	Carbon Resistor (chip)	1.0K 63M J				01
	R0321	**RD356100**	Carbon Resistor (chip)	1.0K 63M J				01
	R0322	**RD357100**	Carbon Resistor (chip)	10K 63M J				01
	R0323	**RD356100**	Carbon Resistor (chip)	1.0K 63M J				01
	R0324	**RD356100**	Carbon Resistor (chip)	1.0K 63M J				01
*	R0325	**RD354390**	Carbon Resistor (chip)	39 63M J				01
*	-0388	**RD354390**	Carbon Resistor (chip)	39 63M J				01
	R0389	**RD354470**	Carbon Resistor (chip)	47 63M J				01
	-3103	**RD354470**	Carbon Resistor (chip)	47 63M J				01
*	TA301	**V6795400**	Transistor Array	M54585FP				03
*	TA302	**V6795400**	Transistor Array	M54585FP				03
	TH001	**VR346900**	Thermistor	ERTD2FGJ801S 800				03
	TR001	**VV556400**	Transistor	2SC2412K Q,R,S				01
	TR002	**VV556400**	Transistor	2SC2412K Q,R,S				01
	TR301	**VH481100**	Transistor	2SB1416(TA) Q,R				01
	TR302	**VV556500**	Transistor	2SA1037AK Q,R,S				01
	TR303	**VH481100**	Transistor	2SB1416(TA) Q,R				01
	TR304	**VV556500**	Transistor	2SA1037AK Q,R,S				01

✻: New Parts

RANK: Japan only

	REF NO.	PART NO.	DESCRIPTION			REMARKS	QTY	RANK
	TR305	**VH481100**	Transistor	2SB1416(TA) Q,R				01
	TR306	**VV556500**	Transistor	2SA1037AK Q,R,S				01
	TR307	**VH481100**	Transistor	2SB1416(TA) Q,R				01
	TR308	**VV556500**	Transistor	2SA1037AK Q,R,S				01
*		**V7384200**	Circuit Board	GL1		(XZ990B0)		
		--	Jumper Wire	0.55		(VA07890)		
	LD001	**V6091200**	LED	SLI-343URT32 C1		C1		01
	LD002	**V6091400**	LED	SLI-343YYT32 C#1		C#1		01
	LD003	**V6091200**	LED	SLI-343URT32 D1		D1		01
	LD004	**V6091400**	LED	SLI-343YYT32 D#1		D#1		01
	LD005	**V6091200**	LED	SLI-343URT32 E1		E1		01
	LD006	**V6091200**	LED	SLI-343URT32 F1		F1		01
	LD007	**V6091400**	LED	SLI-343YYT32 F#1		F#1		01
	LD008	**V6091200**	LED	SLI-343URT32 G1		G1		01
	LD009	**V6091400**	LED	SLI-343YYT32 G#1		G#1		01
	LD010	**V6091200**	LED	SLI-343URT32 A1		A1		01
	LD011	**V6091400**	LED	SLI-343YYT32 A#1		A#1		01
	LD012	**V6091200**	LED	SLI-343URT32 B1		B1		01
	LD013	**V6091200**	LED	SLI-343URT32 C2		C2		01
	LD014	**V6091400**	LED	SLI-343YYT32 C#2		C#2		01
	LD015	**V6091200**	LED	SLI-343URT32 D2		D2		01
	LD016	**V6091400**	LED	SLI-343YYT32 D#2		D#2		01
	LD017	**V6091200**	LED	SLI-343URT32 E2		E2		01
	LD018	**V6091200**	LED	SLI-343URT32 F2		F2		01
	LD019	**V6091400**	LED	SLI-343YYT32 F#1		F#2		01
	LD020	**V6091200**	LED	SLI-343URT32 G2		G2		01
	LD021	**V6091400**	LED	SLI-343YYT32 G#2		G#2		01
	LD022	**V6091200**	LED	SLI-343URT32 A2		A2		01
	LD023	**V6091400**	LED	SLI-343YYT32 A#2		A#2		01
	LD024	**V6091200**	LED	SLI-343URT32 B2		B2		01
	LD025	**V6091200**	LED	SLI-343URT32 C3		C3		01
	LD026	**V6091400**	LED	SLI-343YYT32 C#3		C#3		01
	LD027	**V6091200**	LED	SLI-343URT32 D3		D3		01
	WH001	**--**	Connector Assembly	GL1 11P L=100		(V744380)		
*		**V7384400**	Circuit Board	GL2		(XZ991B0)		
		--	Jumper Wire	0.55		(VA07890)		
	LD028	**V6091400**	LED	SLI-343YYT32 D#3		D#3		01
	LD029	**V6091200**	LED	SLI-343URT32 E3		E3		01
	LD030	**V6091200**	LED	SLI-343URT32 F3		F3		01
	LD031	**V6091400**	LED	SLI-343YYT32 F#3		F#3		01
	LD032	**V6091200**	LED	SLI-343URT32 G3		G3		01
	LD033	**V6091400**	LED	SLI-343YYT32 G#3		G#3		01
	LD034	**V6091200**	LED	SLI-343URT32 A3		A3		01
	LD035	**V6091400**	LED	SLI-343YYT32 A#3		A#3		01
	LD036	**V6091200**	LED	SLI-343URT32 B3		B3		01
	LD037	**V6091200**	LED	SLI-343URT32 C4		C4		01
	LD038	**V6091400**	LED	SLI-343YYT32 C#4		C#4		01
	LD039	**V6091200**	LED	SLI-343URT32 D4		D4		01
	LD040	**V6091400**	LED	SLI-343YYT32 D#4		D#4		01
	LD041	**V6091200**	LED	SLI-343URT32 E4		E4		01
	LD042	**V6091200**	LED	SLI-343URT32 F4		F4		01
	LD043	**V6091400**	LED	SLI-343YYT32 F#4		F#4		01
	LD044	**V6091200**	LED	SLI-343URT32 G4		G4		01
	LD045	**V6091400**	LED	SLI-343YYT32 G#4		G#4		01
	LD046	**V6091200**	LED	SLI-343URT32 A4		A4		01
	LD047	**V6091400**	LED	SLI-343YYT32 A#4		A#4		01
	LD048	**V6091200**	LED	SLI-343URT32 B4		B4		01
	LD049	**V6091200**	LED	SLI-343URT32 C5		C5		01
	LD050	**V6091400**	LED	SLI-343YYT32 C#5		C#5		01
	LD051	**V6091200**	LED	SLI-343URT32 D5		D5		01
	LD052	**V6091400**	LED	SLI-343YYT32 D#5		D#5		01
	LD053	**V6091200**	LED	SLI-343URT32 E5		E5		01
	LD054	**V6091200**	LED	SLI-343URT32 F5		F5		01
	LD055	**V6091400**	LED	SLI-343YYT32 F#5		F#5		01
	LD056	**V6091200**	LED	SLI-343URT32 G5		G5		01
	LD057	**V6091400**	LED	SLI-343YYT32 G#5		G#5		01
	LD058	**V6091200**	LED	SLI-343URT32 A5		A5		01
	LD059	**V6091400**	LED	SLI-343YYT32 A#5		A#5		01

*: New Parts

RANK: Japan only

	REF NO.	PART NO.	DESCRIPTION			REMARKS	QTY	RANK
	LD060	**V6091200**	LED	SLI-343URT32 B5		B5		01
	LD061	**V6091200**	LED	SLI-343URT32 C6		C6		01
	WH002	**--**	Connector Assembly	GL2 13P L=90		(V744390)		
		VZ272400	Circuit Board	MK-H		(XT701A0)		09
	2	**VB941200**	Diode	1SS133,1SS176				01
	3	**VK025500**	Wire Trap	52147 11P TE				01
		V7189900	Circuit Board	MK-L		(XZ850A0)		
	2	**VB941200**	Diode	1SS133,1SS176				01
	2	**VV437800**	Diode	1N4148(DO-34)				01
	3	**VK025500**	Wire Trap	52147 11P TE				01
	4	**VG924500**	Wire Trap	52328 17P TE				02
*		**V7372000**	Circuit Board	PN-AM (1/2,2/2)		(XZ989B0)		
*		**V7372200**	Circuit Board	VR		(XZ989B0)		
		EP600190	Bind Head Tapping Screw-B	3.0X8 MFZN2BL			2	01
		VA119300	Adhesive Tape	12X25				01
		--	Jumper Wire	0.55		(VA07890)		
	C0101	**VE327200**	Monolithic Mylar Capacitor	1.0 50V J				02
	C0101	**VU838100**	Monolithic Mylar Capacitor	1.0000 50V J				
	C0102	**VE327200**	Monolithic Mylar Capacitor	1.0 50V J				02
	C0102	**VU838100**	Monolithic Mylar Capacitor	1.0000 50V J				
	C0104	**VE326600**	Monolithic Mylar Capacitor	0.33 50V J				01
	C0104	**VR169000**	Monolithic Mylar Capacitor	ECQ-V1H334JL3				01
	C0106	**VE326600**	Monolithic Mylar Capacitor	0.33 50V J				01
	C0106	**VR169000**	Monolithic Mylar Capacitor	ECQ-V1H334JL3				01
	C0107	**UR837470**	Electrolytic Cap.	47.00 16.0V				01
	-0109	**UR837470**	Electrolytic Cap.	47.00 16.0V				01
	C0110	**UR838100**	Electrolytic Cap.	100.00 16.0V				01
	C0111	**VC694800**	Semiconductive Cera. Cap.	0.1000 25V Z				01
	C0112	**UR838100**	Electrolytic Cap.	100.00 16.0V				01
	C0113	**VE326200**	Monolithic Mylar Capacitor	0.15 50V J				
	C0113	**VR168500**	Monolithic Mylar Capacitor	ECQ-V1H154JL3				01
	C0114	**VE326200**	Monolithic Mylar Capacitor	0.15 50V J				
	C0114	**VR168500**	Monolithic Mylar Capacitor	ECQ-V1H154JL3				01
	C0115	**UR839100**	Electrolytic Cap.	1000 16.0V				01
	C0116	**UR839100**	Electrolytic Cap.	1000 16.0V				01
	C0117	**UR837470**	Electrolytic Cap.	47.00 16.0V				01
	C0118	**UR837470**	Electrolytic Cap.	47.00 16.0V				01
	C0119	**UR848470**	Electrolytic Cap.	470.00 25.0V				01
	C0120	**VC694800**	Semiconductive Cera. Cap.	0.1000 25V Z				01
	C0121	**VC694800**	Semiconductive Cera. Cap.	0.1000 25V Z				01
	C0122	**UR828100**	Electrolytic Cap.	100.00 10.0V				01
	C0201	**FG644100**	Ceramic Capacitor-F	0.0100 50V Z				01
	C0202	**VC694800**	Semiconductive Cera. Cap.	0.1000 25V Z				01
	CN101	**LB918020**	Base Post Connector	XH 2P TE				01
	CN102	**VI878700**	Cable Holder	51048 9P TE				01
	CN103	**VI878700**	Cable Holder	51048 9P TE				01
	CN104	**VI878000**	Cable Holder	51048 2P TE				01
	CN105	**VK024900**	Wire Trap	52147 5P TE				01
	CN106	**VI878300**	Cable Holder	51048 5P TE				01
	CN201	**VI878400**	Cable Holder	51048 6P TE				01
	CN202	**VI878700**	Cable Holder	51048 9P TE				01
	CN203	**VI879300**	Cable Holder	51048 15P TE				01
	CN204	**VI878000**	Cable Holder	51048 2P TE				01
⚠	D0101	**VL723600**	Diode	20E1-FC4				01
⚠	D0101	**VV731400**	Diode	2A02M				01
⚠	D0101	**VY717100**	Diode	LT2A02-E				01
	D0201	**VB941200**	Diode	1SS133,1SS176				01
⚠*	FZ101	**V6979300**	Fuse	3.00A J				
	HS001	**--**	Heat Sink			(V561400)		
	IC101	**XV771A00**	IC	BA5417		POWER AMP. 5W 2CH		03
*	IC102	**XZ999A00**	IC	UPC2905HF		REGULATOR +5V		03
	IC201	**VG181900**	Photo Coupler	PC-900V				03
⚠	JK101	**LB302260**	Connector	HEC0470-01-630		DC IN 12V		02
	JK102	**LB101870**	Phone Jack	YKB21-5006		PHONES/OUTPUT		03
	JK201	**VC687500**	Phone Jack	YKB21-5014 BLACK		SUSTAIN		01
	JK202	**VJ107200**	DIN Connector	5P YKF51-5050		MIDI OUT		01
	JK203	**VJ107200**	DIN Connector	5P YKF51-5050		MIDI IN		01

✻: New Parts

RANK: Japan only

	REF NO.	PART NO.	DESCRIPTION			REMARKS	QTY	RANK
	L0101	**VB835000**	Coil	FL5R200QNT 20uH				01
	L0102	**VB835000**	Coil	FL5R200QNT 20uH				01
	L0201	**VB835000**	Coil	FL5R200QNT 20uH				01
	-0205	**VB835000**	Coil	FL5R200QNT 20uH				01
	R0101	**HF757150**	Carbon Resistor	15.0K 1/4 J				01
	R0102	**HF757150**	Carbon Resistor	15.0K 1/4 J				01
	R0103	**HF756470**	Carbon Resistor	4.7K 1/4 J				01
	R0104	**HF756470**	Carbon Resistor	4.7K 1/4 J				01
	R0105	**HF756560**	Carbon Resistor	5.6K 1/4 J				01
	R0106	**HF756560**	Carbon Resistor	5.6K 1/4 J				01
	R0107	**HF755470**	Carbon Resistor	470.0 1/4 J				01
	R0108	**HF755470**	Carbon Resistor	470.0 1/4 J				01
	R0109	**HF756100**	Carbon Resistor	1.0K 1/4 J				01
	R0110	**HF756100**	Carbon Resistor	1.0K 1/4 J				01
	R0111	**HF753220**	Carbon Resistor	2.2 1/4 J				01
	R0112	**HF753220**	Carbon Resistor	2.2 1/4 J				01
	R0113	**HF755100**	Carbon Resistor	100.0 1/4 J				01
	R0114	**HF755100**	Carbon Resistor	100.0 1/4 J				01
	R0115	**VU317000**	Metal Oxide Film Resistor	0.1 1W J				01
	R0116	**VU317000**	Metal Oxide Film Resistor	0.1 1W J				01
	R0117	**HF758100**	Carbon Resistor	100.0K 1/4 J				01
	R0118	**HF757470**	Carbon Resistor	47.0K 1/4 J				01
	R0119	**HF756180**	Carbon Resistor	1.8K 1/4 J				01
	R0120	**HF756180**	Carbon Resistor	1.8K 1/4 J				01
	R0121	**HF757470**	Carbon Resistor	47.0K 1/4 J				01
	R0202	**HF755220**	Carbon Resistor	220.0 1/4 J				01
	-0204	**HF755220**	Carbon Resistor	220.0 1/4 J				01
	R0205	**HF756100**	Carbon Resistor	1.0K 1/4 J				01
	TR101	**VT459200**	Transistor	2SB1326 Q,R				01
	TR102	**IC174070**	Transistor	2SC1740S R,S				01
	VR101	**VZ048400**	Rotary Variable Resistor	A10.0K XV0141GPVN2		MASTER VOLUME		02
	WH001	**--**	GND Wire	L=110		(V759780)		
	WH102	**--**	Connector Assembly	AM 9P L=80		(V744350)		
	WH103	**--**	Connector Assembly	PN2 9P		(V719710)		
	WH104	**--**	Connector Assembly	SP 2P		(V752040)		
	WH106	**--**	Connector Assembly	VR 5P		(V719680)		
	WH201	**--**	Connector Assembly	MIDI 6P L=70		(V744340)		
	WH203	**--**	Connector Assembly	PN1 15P L=90		(V744370)		
	WH204	**--**	Connector Assembly	SP 2P L=260 RE/WH		(V752040)		
		XN789B00	Speaker	12.0cm 4 ohm 5W			2	05
*		**V6968100**	LCD	TTR5442 TYPE-V1				

✻: New Parts

RANK: Japan only