Clavinova®

CVP-201

SERVICE MANUAL



The CVP-201 service manual provides a listing of only the differences as compared with the CVP-103.
For checking and repairing the CVP-201, be sure to use the service manual for the CVP-103 **CL 001623** together with this one.

This document is printed on chlorine free (ECF) paper with soy ink.

YAMAHA
HAMAMATSU, JAPAN
1.753K-051 K Printed in Japan '01.08

CL 001661
20011001-250000

CVP-201

■ BLOCK DIAGRAM

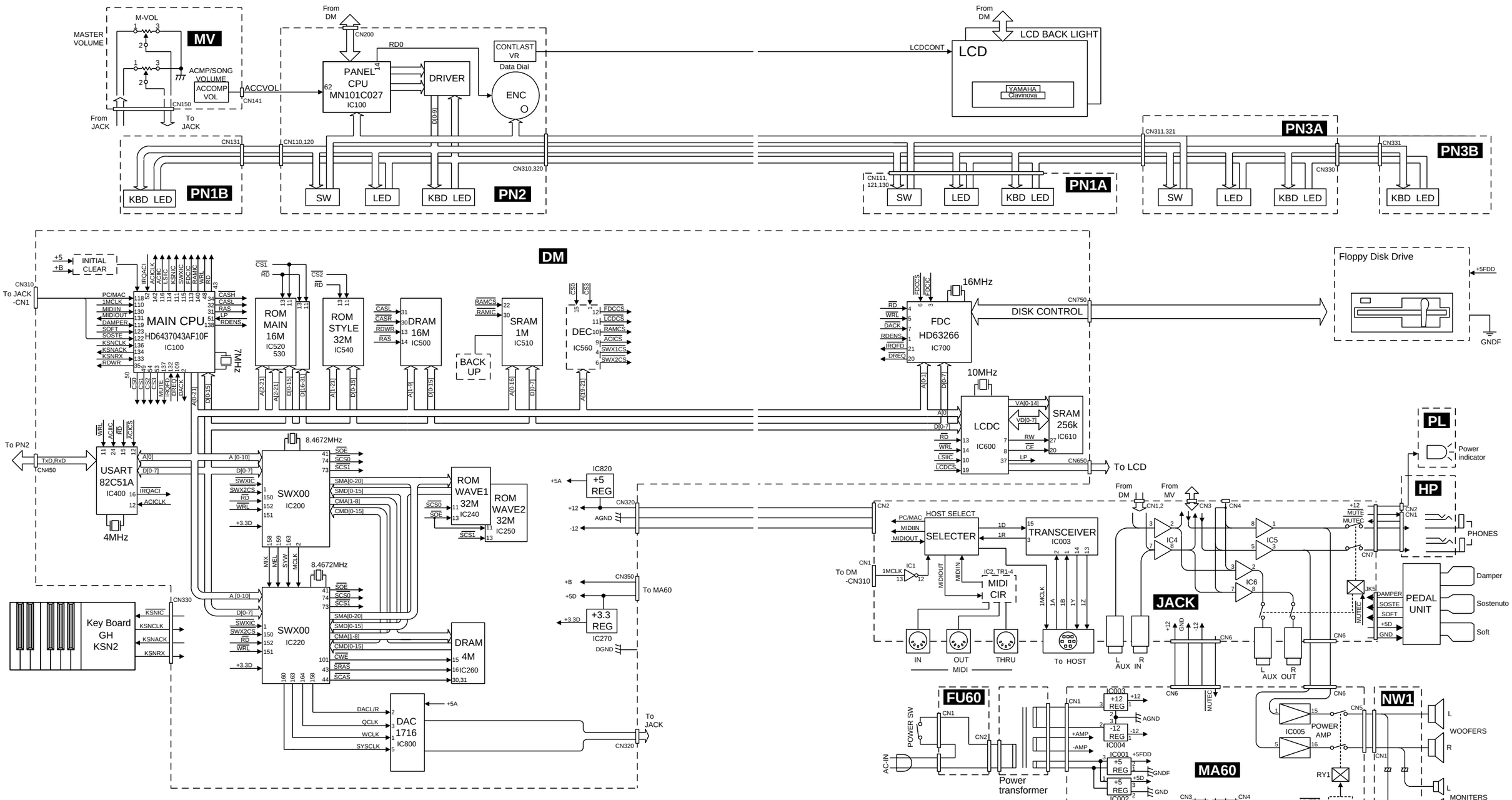

28CA1-8812909⚠

2

PARTS LIST

Notes: DESTINATION ABBREVIATIONS

A: Australian model	J: Japanese model
B: British model	U: U.S.A. model
C: Canadian model	V: General export model (110V)
E: European model	W: General export model (220V)
H: North European model	X: General export model
I: Indonesian model	Y: Export model

- The numbers in “QTY” show quantities for each unit.
- The parts with “--” in “Parts No.” are not available as spare parts.

■ OVERALL ASSEMBLY

	REF NO.	PART NO. CVP-103	PART NO. CVP-201	DESCRIPTION			REMARKS		QTY	RANK
				ACCESSORIES						
*		V3236500	**V7819400**	Floppy Disk	DISK		J			
*		V3239900	**V7819500**	Floppy Disk	DISK		U,B,E,N			
		--	**--**	Bench	BC-100DR		U,N	(V553140)		
			--	Main Unit			J	(V779180)		
			--	Main Unit			U	(V779190)		
			--	Main Unit			B,E	(V779200)		
			--	Main Unit			N	(V779210)		
			--	Common Parts Organization				(V779220)		
	60		**--**	Control Panel Assembly			J,B,E,N	(V780460)		
	60		**--**	Control Panel Assembly			U	(V780920)		
	70		**--**	FDD Assembly			J,B,E,N	(V780970)		
	70		**--**	FDD Assembly			U	(V780980)		
		V3325100	**--**	Common Parts Organization				(V779220)		
*	10	VU431800	**V7420200**	Music Rest Assembly						
*	80	VY664900	**V7803300**	Keyboard Assembly	GHD_CL88					
	190		**--**	Headphones Jack Assembly	HP			(VT15870)		
*		V3325100	**V7420200**	Music Rest Assembly						
	2	VV603100	**VD255900**	Hinge					2	7
	3	VV965900	**CB054920**	Cap Black					2	1
	5	--	**V5782300**	Emblem	BRASS					5
				HEADPHONES JACK ASSEMBLY						
		--	**--**	Headphones Jack Assembly	HP			(VT15870)		
	12	VT478400	**VT089300**	Circuit Board	HP			(XQ390A0)		9
	22	--	**VN631800**	Angle, HP						4
	31	VB508600	**VB508600**	Hexagonal Nut	12.0 14X2 MFZN2BL				2	1
		--	**--**	Control Panel Assembly			J,B,E,N	(V780460)		
		--	**--**	Control Panel Assembly			U	(V780920)		
*	5	V3309400	**V7804700**	Control Panel						
		--	**--**	FDD Assembly			J,B,E,N	(V780970)		
		--	**--**	FDD Assembly	(U)		U	(V780980)		
	1	V2043400	**V6492300**	Floppy Disk Drive	ALPS DF354H					13

*: New parts

RANK: Japan only

■ KEYBOARD ASSEMBLY

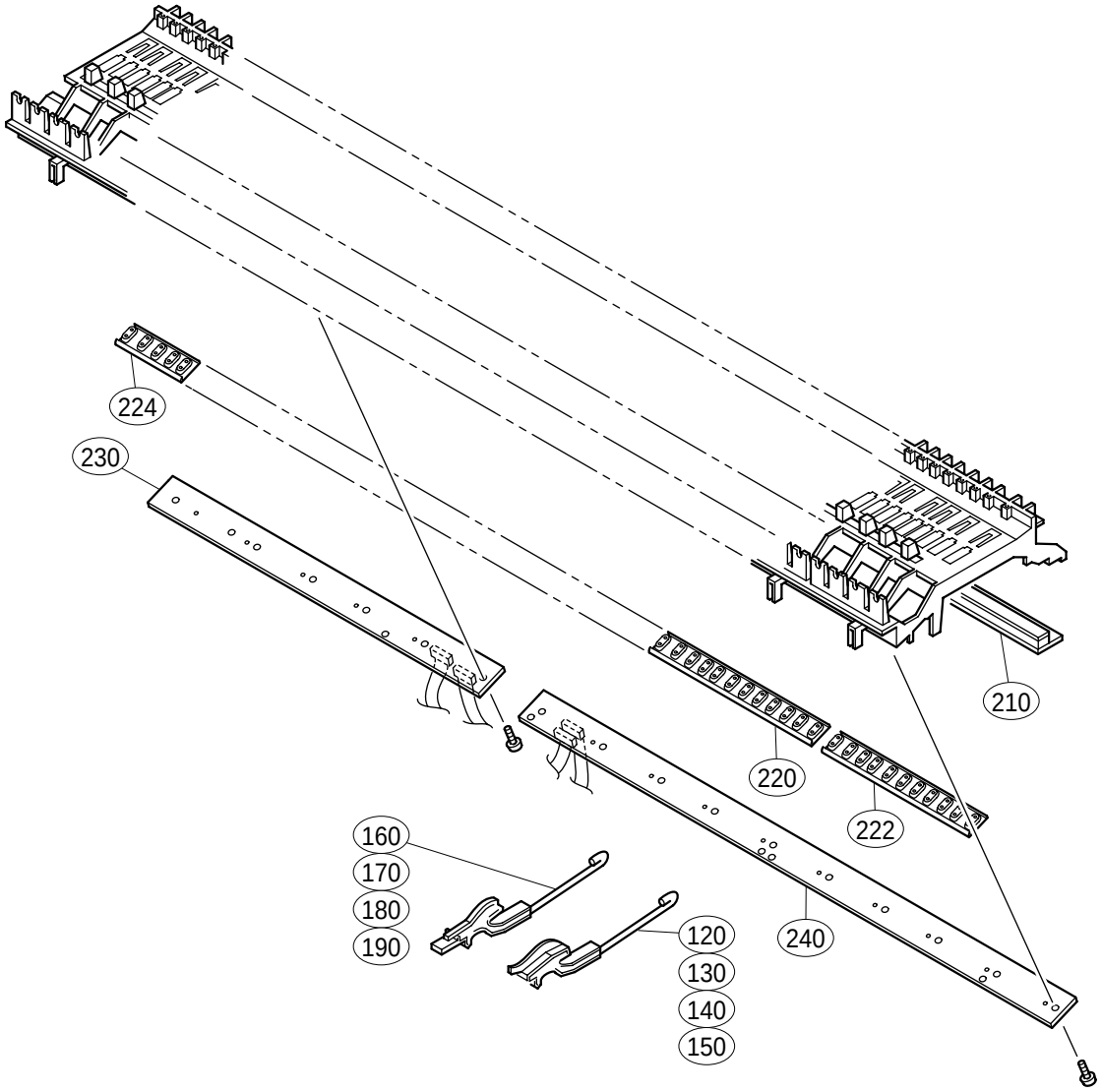

REF NO.	PART NO. CVP-103	PART NO. CVP-201	DESCRIPTION			REMARKS	QTY	RANK
*	VU431800	**V7803300**	Keyboard Assembly	GHD_CL88				
120	VU102200	**VY828500**	Hammer, White Key 1				13	5
130	VU102300	**VY828600**	Hammer, White Key 2				13	5
140	VU102400	**VY828700**	Hammer, White Key 3				13	5
150	VU102500	**VY828800**	Hammer, White Key 4				13	5
160	VU102600	**VY828900**	Hammer, Black Key 1				9	5
170	VU102700	**VY829000**	Hammer, Black Key 2				9	5
180	VU102800	**VY829100**	Hammer, Black Key 3				9	5
190	VU102900	**VY829200**	Hammer, Black Key 4				9	5
210	VU342200	**V7640100**	Stopper					7
220	VY693500	**VY846700**		GH 2M OCT			6	8
222	VY693500	**VY846800**		GH 2M OCT				8
224	VY693500	**VY846900**		GH 2M OCT				8
* 230	VU342300	**V7817100**	Circuit Board	GHDclSW L		(XT240A0)		
240	VU342400	**VZ705300**	Circuit Board	GH-D_SW H		(XT241A0)		13

*: New parts

RANK: Japan only

■ BENCH

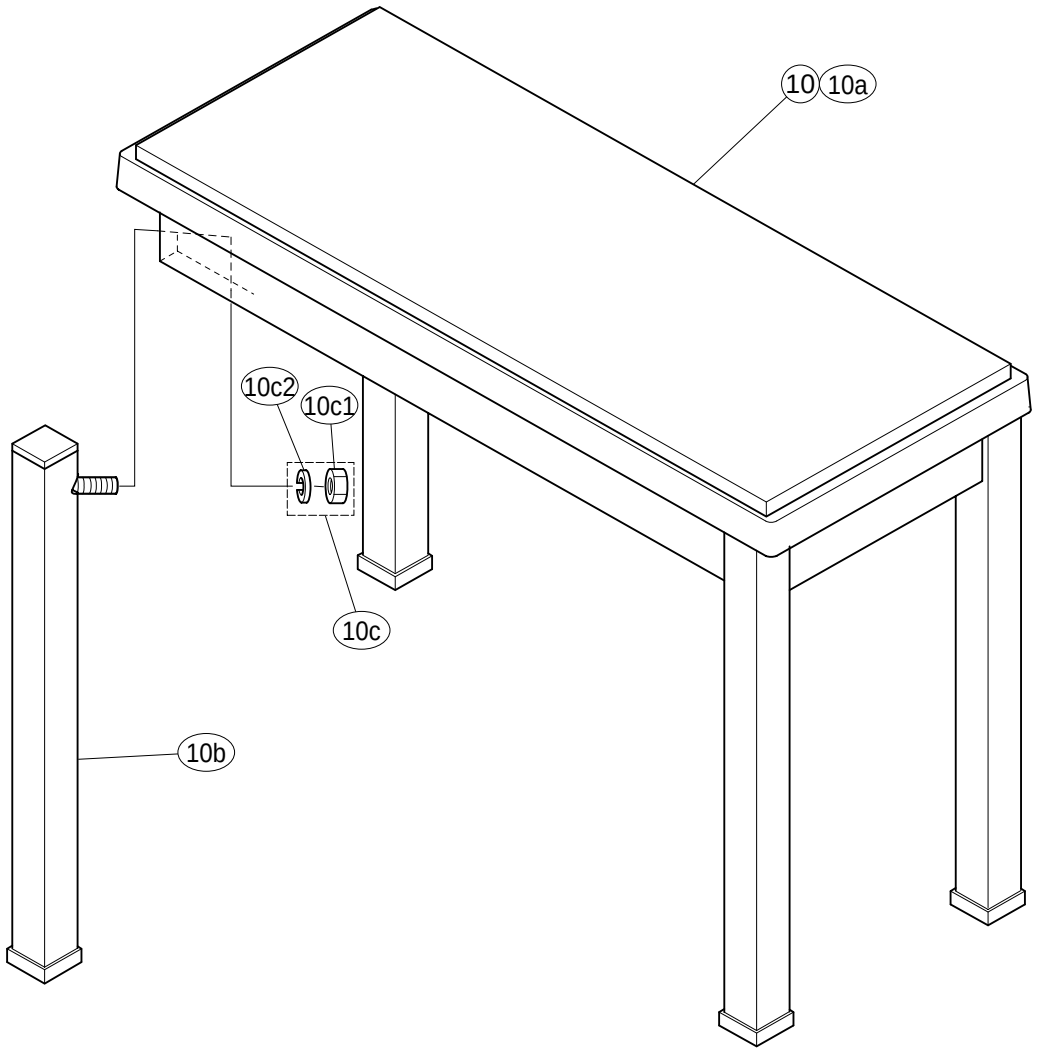

	REF NO.	PART NO. CVP-103	PART NO. CVP-201	DESCRIPTION			REMARKS		QTY	RANK
				BENCH						
		--	--	Bench Set Assembly	BC-100DR		U,N	(V553140)		
	10		--	Bench Assembly Rose	BC-XX		U,N	(V553200)		
	10a	NX817860	**V5532900**	Bench Board Assembly Rose						16
*	10b	AX817680	**V8176300**	Leg Assembly Rose					4	
	10c		**VS530500**	Screw Set	BC-XX					3
	10c1	EX001060	**03761250**	Hexagonal Nut	#1 10.0X1.25 MFZN2				4	1
	10c2	03765820	**03765820**	Spring Washer	#2 10.0 MFZN2Y				4	1

*: New parts

RANK: Japan only

■ ELECTRICAL PARTS

	REF NO.	PART NO. CVP-103	PART NO. CVP-201	DESCRIPTION			REMARKS	QTY	RANK
				ELECTRICAL PARTS					
*		VU342300	**V7817100**	Circuit Board	GHDclSW L		(XT240A0)		
		VU342400	**VZ705300**	Circuit Board	GH-D_SW H		(XT241A0)		13
		VT478400	**VT089300**	Circuit Board	HP		(XQ390A0)		09

*: New parts

RANK: Japan only

■ CIRCUIT DAIGRAM

• HP Circuit Diagram

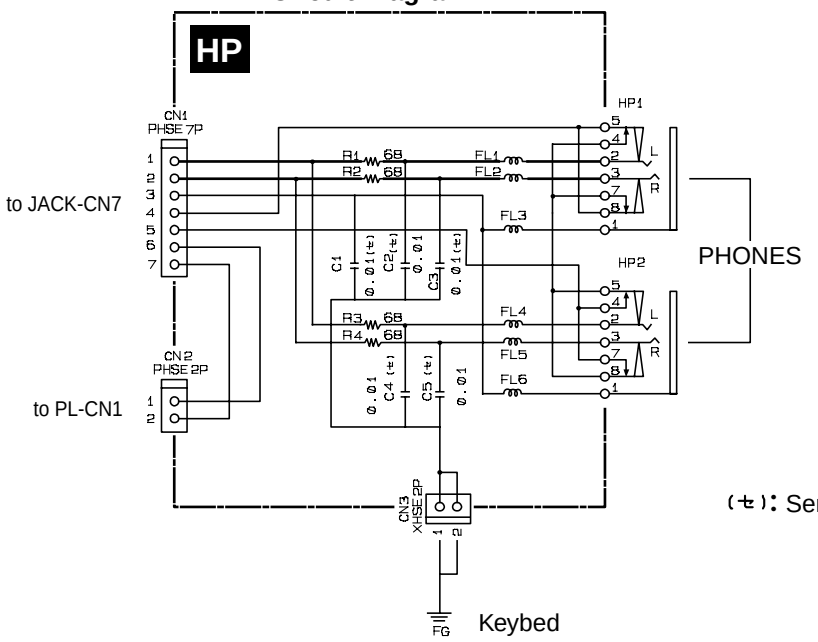

(+): Semiconductive Cera. Cap.

• GH-D_SW H Circuit Diagram

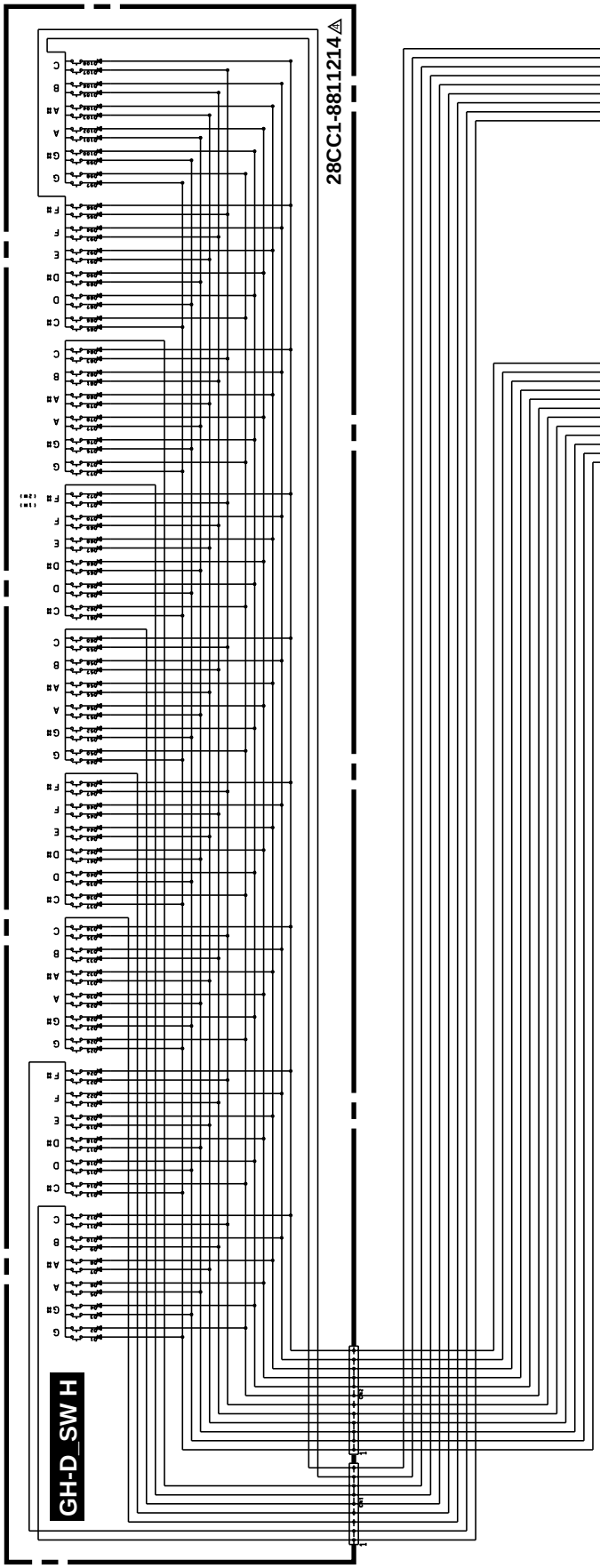

• GHDcl SW L Circuit Diagram

