Clavinova

CVP-35

SERVICE MANUAL



■CONTENTS （目次）

SPECIFICATIONS 2
PANEL LAYOUT 3
CIRCUIT BOARD LAYOUT 5
BLOCK DIAGRAM 7
DISASSEMBLY PROCEDURE 9
LSI PIN DESCRIPTION 17
IC BLOCK DIAGRAM 21
CIRCUIT BOARDS 22
TEST PROGRAM 34
MIDI DATA FORMAT 35
MIDI IMPLEMENTATION CHART 37
PARTS LIST

CVP-35

SK 001447

YAMAHA CORP.
HAMAMATSU, JAPAN
2.497K-754 Printed in Japan '91.5

IMPORTANT NOTICE

This manual has been provided for the use of authorized Yamaha Retailers and their service personnel. It has been assumed that basic service procedures inherent to the industry, and more specifically Yamaha Products, are already known and understood by the users, and have therefore not been restated.

WARNING: Failure to follow appropriate service and safety procedures when servicing this product may result in personal injury, destruction of expensive components and failure of the product to perform as specified. For these reasons, we advise all Yamaha product owners that all service required should be performed by an authorized Yamaha Retailer or the appointed service representative.

IMPORTANT: The presentation or sale of this manual to any individual or firm does not constitute authorization, certification, recognition of any applicable technical capabilities, or establish a principle-agent relationship of any form.

The data provided is believed to be accurate and applicable to the unit(s) indicated on the cover. The research, engineering, and service departments of Yamaha are continually striving to improve Yamaha products. Modifications are, therefore, inevitable and changes in specification are subject to change without notice or obligation to retrofit. Should any discrepancy appear to exist, please contact the distributor's Service Division.

WARNING: Static discharges can destroy expensive components. Discharge any static electricity your body may have accumulated by grounding yourself to the ground buss in the unit (heavy gauge black wires connect to this buss).

IMPORTANT: Turn the unit OFF during disassembly and parts replacement. Recheck all work before you apply power to the unit.

WARNING: CHEMICAL CONTENT NOTICE!

The solder used in the production of this product contains LEAD. In addition, other electrical/electronic and/or plastic (where applicable) components may also contain traces of chemicals found by the California Health and Welfare Agency (and possibly other entities) to cause cancer and/or birth defects or other reproductive harm.

DO NOT PLACE SOLDER, ELECTRICAL/ELECTRONIC OR PLASTIC COMPONENTS IN YOUR MOUTH FOR ANY REASON WHAT SO EVER!

Avoid prolonged, unprotected contact between solder and your skin! When soldering, do not inhale solder fumes or expose eyes to solder/flux vapor!.

If you come in contact with solder or components located inside the enclosure of this product, wash your hands before handling food.

CVP-35

■SPECIFICATIONS

	CVP-35
KEYBOARD	88 KEYS (A-1 — C7)
TONE GENERATOR	AWM (Advanced Wave Memory)
VOICE SELECTORS & CONTROLS	PIANO, CLAVINOVA TONE, E. PIANO, HARPSI, VIBES, GUITAR, STRINGS, ORGAN, CHOIR, UPRIGHT BASS, ELEC BASS, DRUMS, VOICE 13 - 53, SPLIT
TOUCH SENSITIVITY	HARD, MEDIUM, SOFT
PIANO ABC & CONTROLS	SINGLE FINGER, FINGERED, SOLO STYLEPLAY, RHYTHM VOLUME, CHORD 1 VOLUME, CHORD 2 VOLUME, BASS VOLUME
RHYTHM SELECTORS & CONTROLS	POP 1/2, DANCE POP 1/2, 16 BEAT 1/2, ROCK'N', 16 BEAT 3, SLOW ROCK, SHUFFLE, COUNTRY 1/2, SWING 1/2, BIG BAND, BOOGIE, BOSSA, SAMBA, CHA-CHA, RHUMBA, MARCH, MARCH 6/8, WALTZ, J. WALTZ, START/STOP, INTRO/ ENDING, NORMAL/FILL TO NORMAL, VARIATION/ FILL TO VARIATION, TEMPO ▲/▼, TEMPO Display, BEAT LED
KEYBOARD PERCUSSION	BRUSH ROLL, HI-HAT CLOSED HEAVY, CRASH CYMBAL LIGHT, BASS DRUM LIGHT, SNARE DRUM + RIM HEAVY, RIDE CYMBAL CUP, SNARE DRUM + RIM LIGHT, BASS DRUM, RIM SHOT, SNARE DRUM HEAVY, BRUSH SHOT, SNARE DRUM LIGHT, HI-HAT PEDAL, SNARE DRUM ECHO, TOM 4, HI-HAT CLOSED, TOM 3, HI-HAT OPEN, TOM 2, TOM 1, RIDE CYMBAL, CRASH CYMBAL, CONGA LOW, CABASA, CONGA HIGH, METRONOME, BONGO, TIMBALE LOW, CLAVES, TIMBALE HIGH, CASTANETS, CUICA LOW, COWBELL, CUICA HIGH, HAND CLAPS, AGOGO LOW, AGOGO HIGH, BONGO LOW, TAMBOURINE, TRIANGLE CLOSED, TRIANGLE OPEN
PERFORMANCE MEMORY	RECORD 1/2/3, PLAY BACK 1/2/3
PEDAL CONTROLS	DAMPER, SOFT (SOSTENUTO, START/STOP, SOLO STYLEPLAY)
OTHER CONTROLS	MASTER VOLUME, MIDI/TRANSPOSE, DEMO, POWER
JACKS & CONNECTORS	HEADPHONES x 2, AUX. OUT R and L/L + R, OPTIONAL IN R/L, MIDI IN/OUT/ THRU
INPUT & OUTPUT LEVEL/IMPEDANCE	AUX. OUT: 600 - 300 Ω/-4 dBm OPTIONAL IN: 22 kΩ/-10 dBm (for nominal output level)
MAIN AMPLIFIERS	60 W (30 W x 2)
SPEAKERS	13 cm (5-1/8") x 2, 5 cm (2") x 2
DIMENSIONS (W x D x H)	1416 mm x 582 mm x 817 mm (55-3/4" x 23" x 32-1/8")
WEIGHT	60.0 kg (132.3 lbs.)

CVP-35

■PANEL LAYOUT

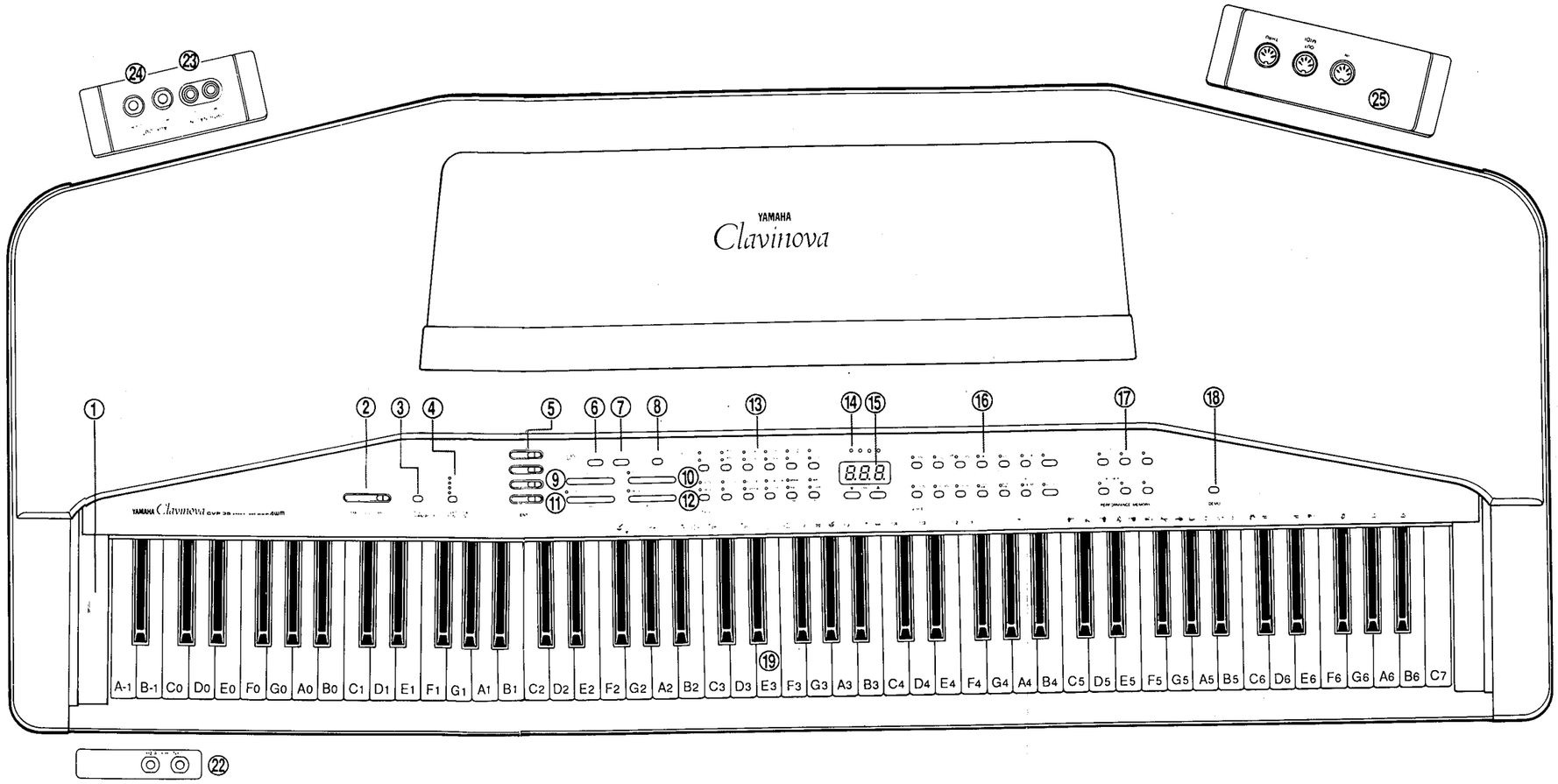

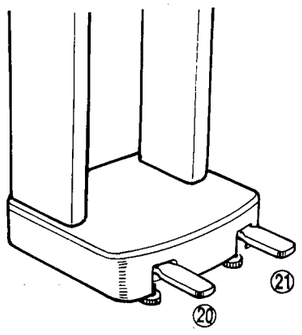

① POWER Switch
② MASTER VOLUME Control
③ [MIDI/TRANSPOSE] Button
④ [LEFT PEDAL FUNCTION] Button
⑤ ACCOMPANIMENT Volume Controls
⑥ PIANO ABC [SINGLE FINGER] Button
⑦ PIANO ABC [FINGERED] Button
⑧ [SOLO STYLEPLAY] Button
⑨ [START/STOP] Button
⑩ [INTRO/ENDING] Button
⑪ [NORMAL/FILL TO NORMAL] Button
⑫ [VARIATION/FILL TO VARIATION] Button
⑬ STYLE Selectors
⑭ BEAT Display
⑮ TEMPO Display and [▲] and [▼] Buttons
⑯ VOICE Selectors
⑰ PERFORMANCE MEMORY Buttons .
⑱ [DEMO] Button
⑲ Keyboard
⑳ Soft Pedal
㉑ Damper Pedal
㉒ HEADPHONES Jacks
㉓ OPTIONAL IN R and L Jacks
㉔ AUX. OUT R and L/L+R Jacks
㉕ MIDI Connectors

CVP-35

■CIRCUIT BOARD LAYOUT

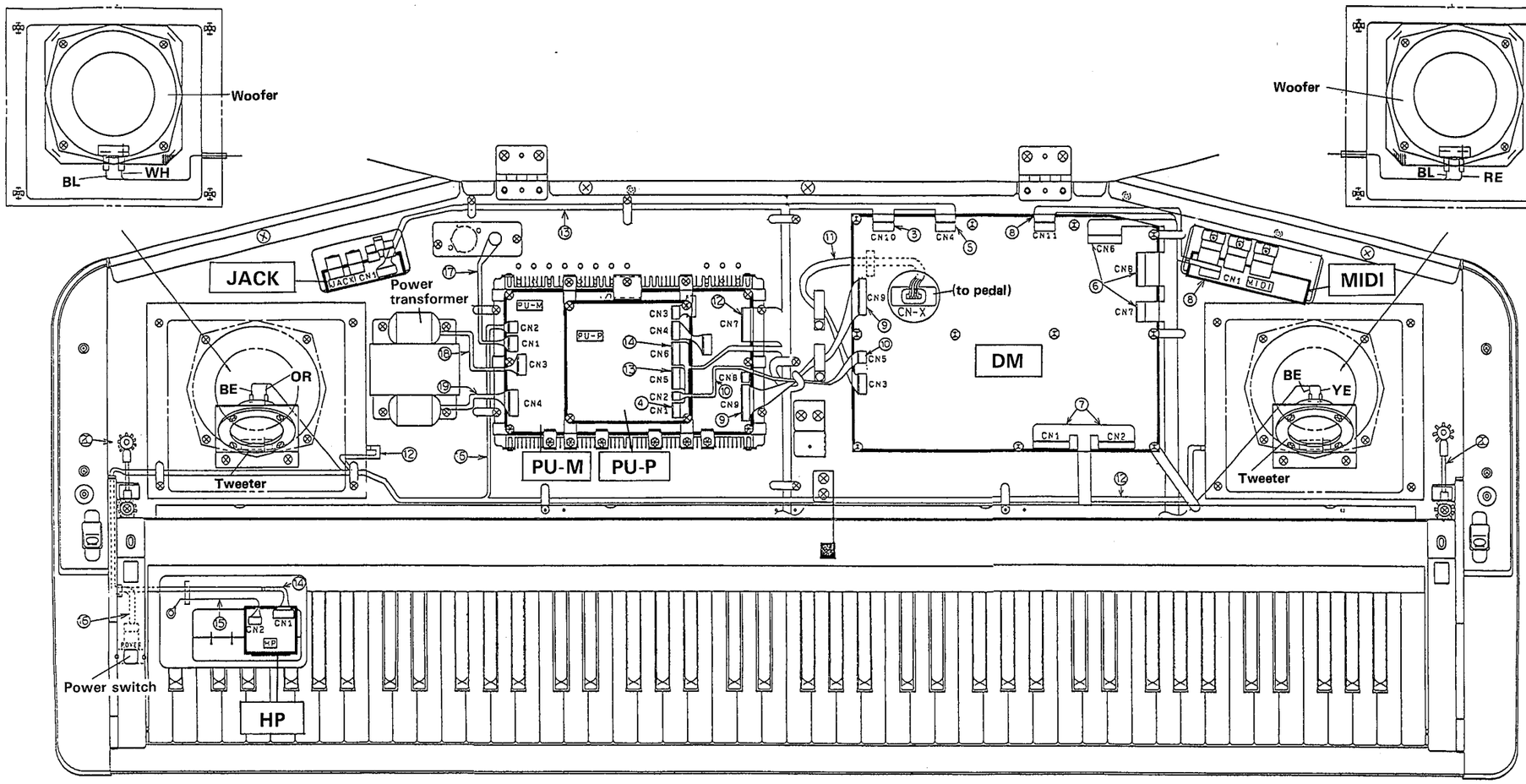

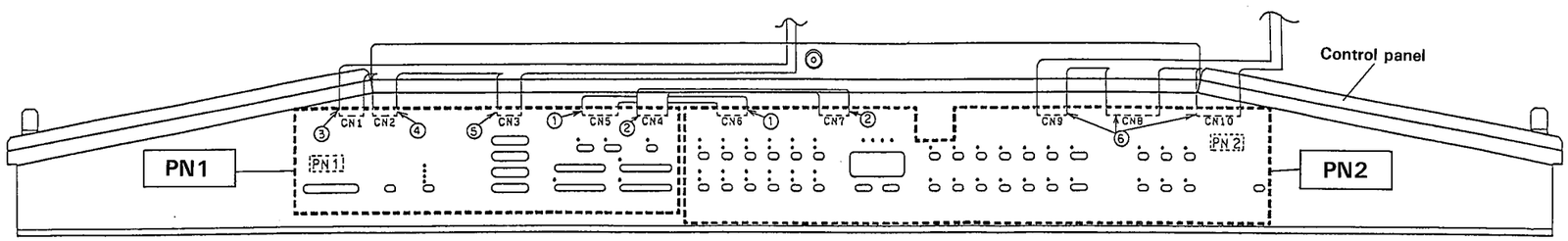

	Destination	
①	PN1-CN5	PN2-CN6
②	PN1-CN4	PN2-CN7
③	PN1-CN1	DM-CN10
④	PN1-CN2	PU.P-CN1
⑤	PN1-CN3	DM-CN4
⑥	PN2-CN8,9,10	DM-CN6,7,8
⑦	Keyboard	DM-CN1,2
⑧	DM-CN11	MIDI-CN1
⑨	DM-CN9	PU.M-CN9
⑩	DM-CN5	PU.P-CN2
⑪	CN-X	DM-CN3
⑫	PU.M-CN7	Speaker
⑬	PU.P-CN5	JACK-CN1
⑭	PU.P-CN6	HP-CN1
⑮	Keybed	HP-CN2
⑯	Power switch	PU.M-CN2
⑰	Keybed	PU.M-CN1
⑱	P.T.primary	PU.M-CN3
⑲	P.T.secondary	PU.M-CN4
⑳	Keybed	Control panel

■DISASSEMBLY PROCEDURE

1 Opening the Top Board

1-1 To open the top board loosen the two (2) screws marked as ㉚ in the figure, one on the right and one on the left side. These screws are located on the under side of the keybed. You should not remove these screws, holders will prevent them from falling out. (Fig. 1)

1-3 Lift the top board from the front and gently lean it against the wall - MAKING SURE THAT IT CAN NOT FALL. This will give you access to the DM circuit board and power amplifier.

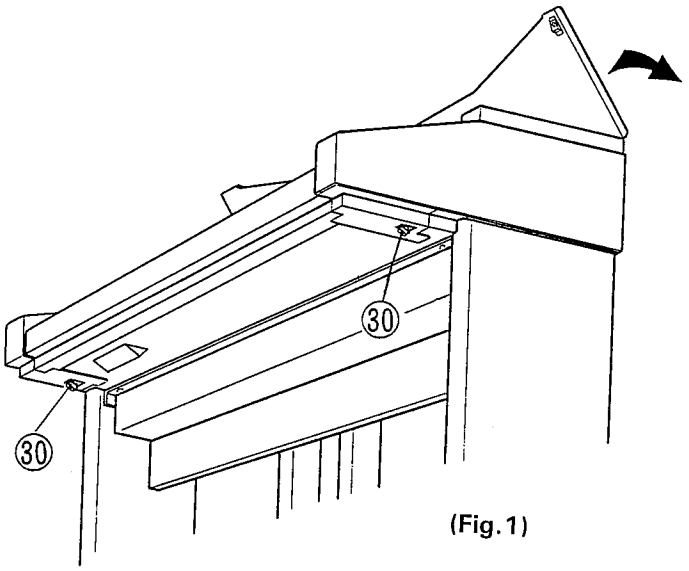

(Fig.1)

2 Control Panel Assembly Removal

2-1 Open the top board. (see procedure 1 - Opening the Top Board)

2-2 Remove the screw marked ㉜ and two (2) screws marked ㊳, then the control panel assembly can be removed with the PN1 and PN2 circuit boards. (Fig. 2)

3 DM Circuit Board Removal

3-1 Open the top board. (see procedure 1)

3-2 Remove the eleven (11) screws marked ㉘, then the DM circuit board can be removed. (Fig. 2)

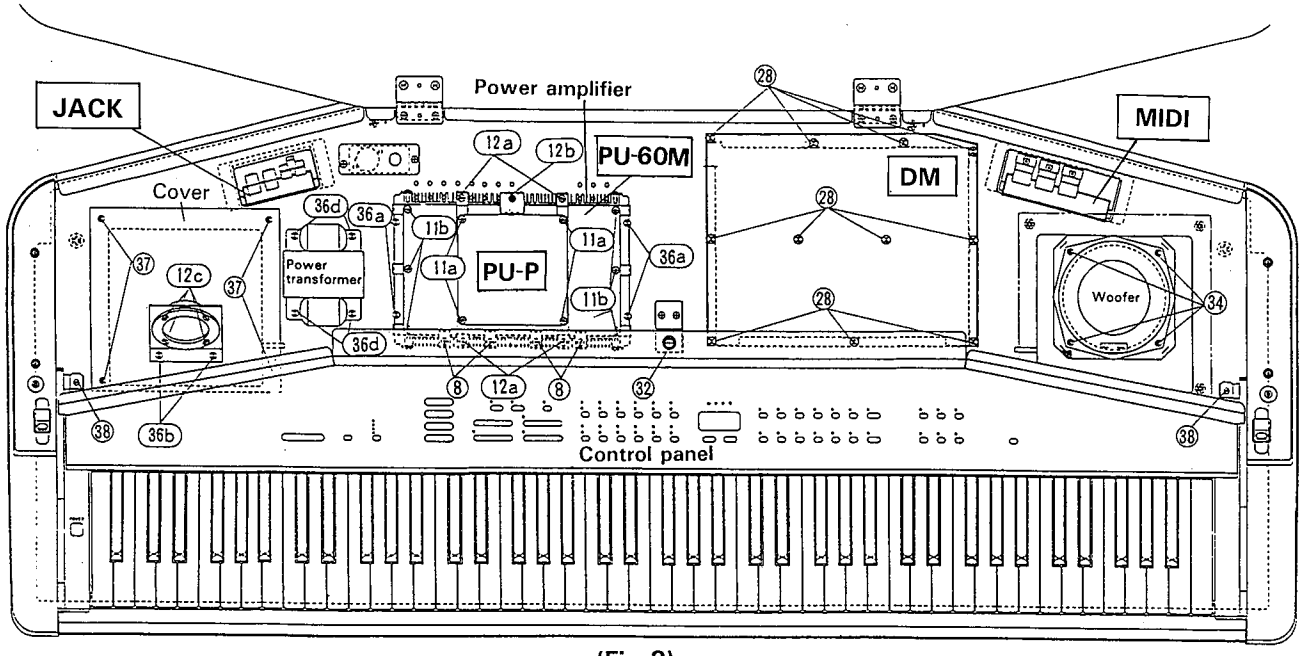

(Fig.2)

4 PN1 Circuit Board Removal

4-1 Open the top board. (see procedure 1)
4-2 Remove the control panel assembly. (see procedure 2)
4-3 Pull out the five (5) level control knobs. (Fig. 3)
4-4 After the nine (9) screws marked (80a) have been removed, then the PN1 circuit board can be removed. (Fig. 3)

5 PN2 Circuit Board Removal

5-1 Open the top board. (see procedure 1)
5-2 Remove the control panel assembly. (see procedure 2)
5-3 After the thirteen (13) screws marked (80b) have been removed, then the PN2 circuit board can be removed. (Fig. 3)

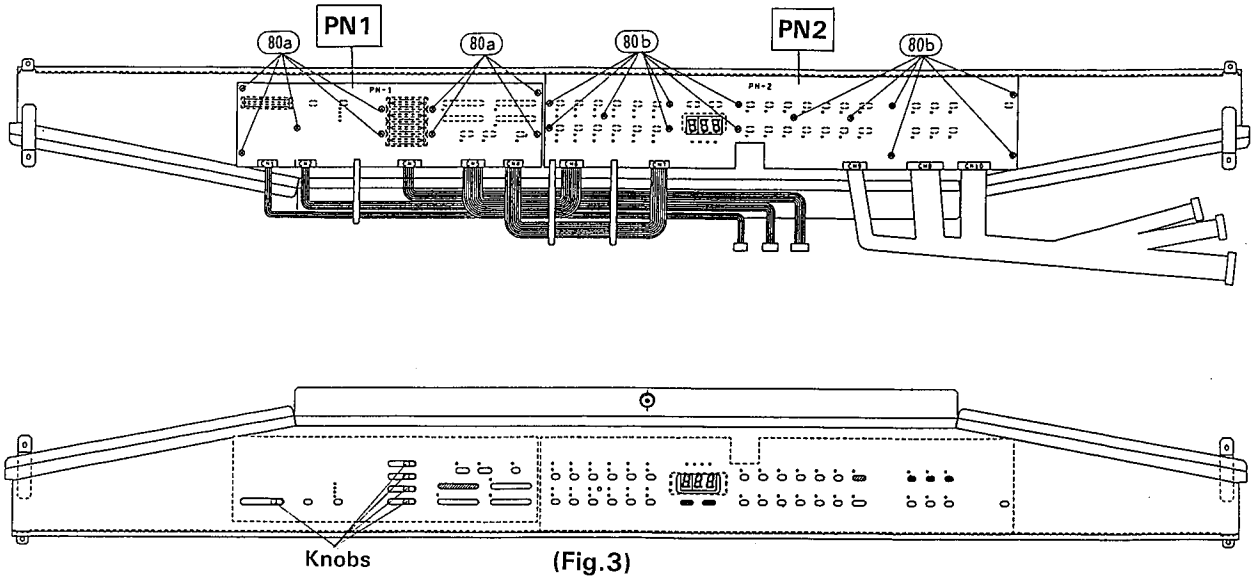

(Fig.3)

6 Power Amplifier Removal

6-1 Open the top board. (see procedure 1)
6-2 For the U.S. model only: Remove the four (4) screws marked (31), then the shield cover can be removed. (Fig. 4)
6-2 Remove the four (4) screws marked (36a), then the power amplifier unit can be removed. (Fig. 2)

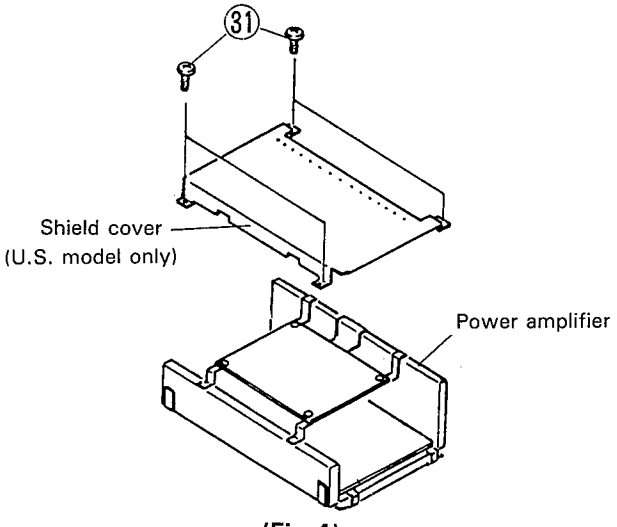

(Fig.4)

7 PU-P Circuit Board Removal

7-1 Open the top board. (see procedure 1)
7-2 Remove the four (4) screws marked(11a), then the PU-P circuit board can be removed. (Fig. 2)

8 PU-60M Circuit Board Removal

8-1 Open the top board. (see procedure 1)
8-2 To remove the PU-P circuit board with brackets, remove the four (4) screws marked(12a). (Fig. 2)
8-3 Remove the screw marked(12b) and four (4) screws marked(8) retaining the holders. (Fig. 2)
8-4 The PU-60M circuit board can be removed by removing the six (6) screws marked(11b). (Fig. 2)

9 Woofer, Speaker Removal

* Left and right woofers can be removed in the same manner as shown below.
9-1 Open the top board. (see procedure 1)
9-2 Remove the four (4) screws marked (37), then the cover can be removed with a tweeter. (Fig. 2)
9-3 After the four (4) screws marked (34) have been removed, then the woofer can be removed. (Fig. 2)

10 Tweeter, Speaker Removal

* Left and right tweeters can be removed in the same manner as shown below.
10-1 Open the top board. (see procedure 1)
10-2 Remove the two (2) screws marked(36b), then remove the four (4) screws marked(12c), you can remove the tweeter. (Fig. 2)

11 Power Transformer Removal

11-1 Open the top board. (see procedure 1)
11-2 For the U.S. model only: To remove the shield cover, remove the four (4) screws marked(36c). (Fig. 5)
11-3 Remove the four (4) screws marked(36d), then the power transformer can be removed. (Fig. 2)

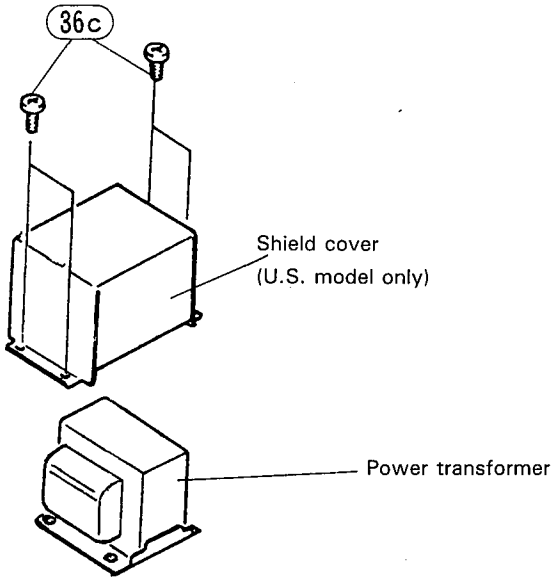

(Fig.5)

12 Power Switch Removal

12-1 Open the top board. (see procedure 1)

12-2 Remove the control panel. (see procedure 2)

12-2 To remove the left end block, remove the screw marked (36e). (Fig. 6)

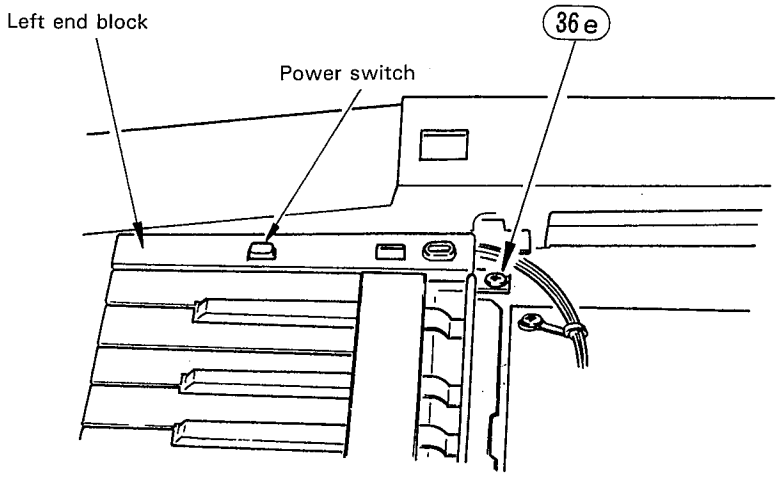

(Fig.6)

12-3 After the two (2) screws marked (23d) have been removed, then the power switch can be removed. You should pull out the knob. (Fig. 7)

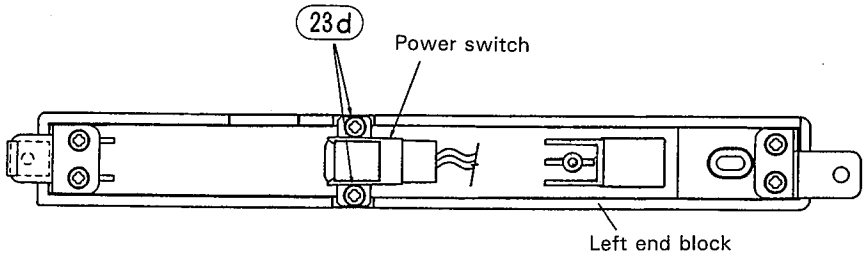

(Fig. 7)

13 HP Circuit Board Removal

13-1 Open the top board. (see procedure 1)

13-2 After the two (2) hexagonal nuts marked Ⓐ have been removed, then the HP circuit board can be removed. (Fig.2 and Fig. 8)

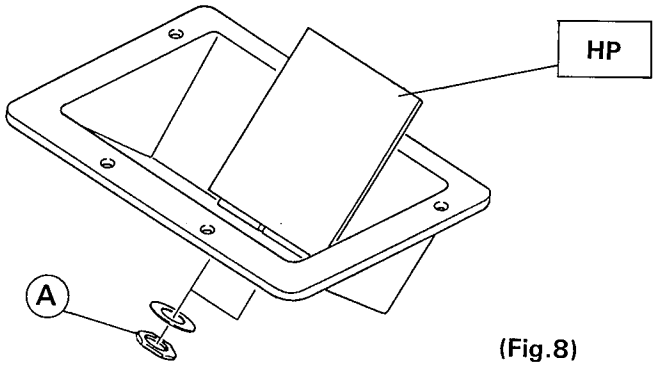

(Fig.8)

14 MIDI Circuit Board Removal

14-1 Open the top board. (see procedure 1)

14-2 Remove the three (3) screws marked Ⓑ, then the MIDI circuit board can be removed. (Fig. 2 and Fig. 9)

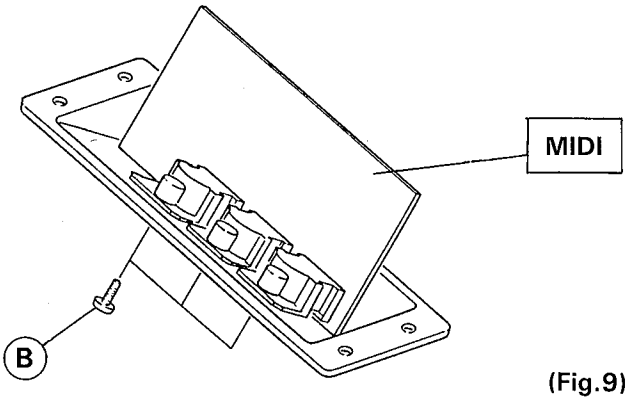

(Fig.9)

15 JACK Circuit Board Removal

15-1 Open the top board. (see procedure 1)

15-2 Remove the screw marked Ⓒ and two (2) hexagonal nuts marked Ⓓ, then the JACK circuit board can be removed. (Fig. 2 and Fig. 10)

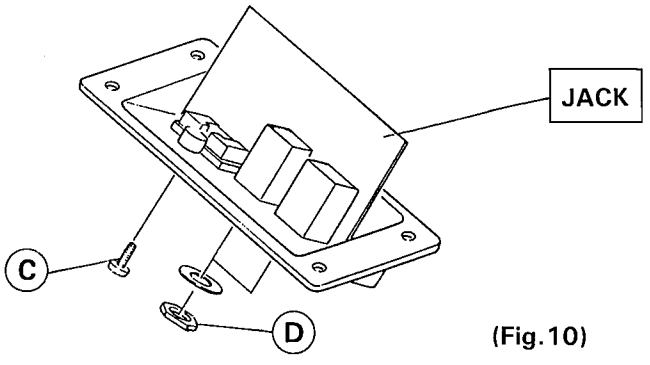

(Fig.10)

16 Keyboard Assembly Removal

16-1 Open the top board. (see procedure 1)

16-2 Remove the left block by removing the screw marked (36e). (Fig. 11)
The right one can be removed in the same manner.

16-3 To remove the support, remove the two (2) screws marked (39). (Fig. 12)

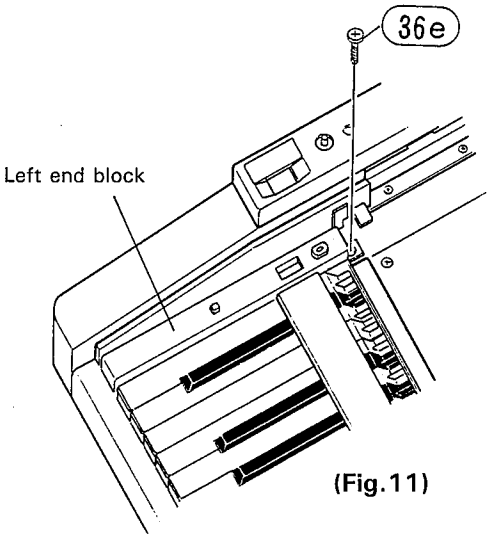

(Fig.11)

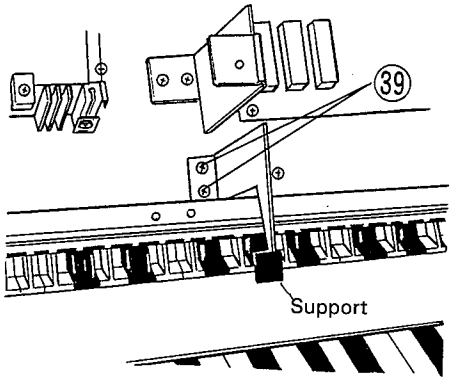

(Fig.12)

16-4 Remove the five (5) screws marked (35) located under the keybed. (Fig. 13)

16-5 After the four (4) screws marked (36f) and four (4) screws marked (39) have been removed, the keyboard assembly can be taken out of the unit. (Fig. 14)

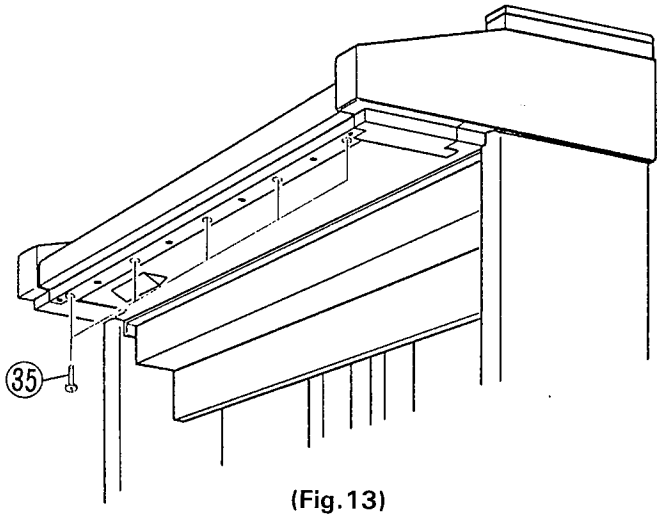

(Fig.13)

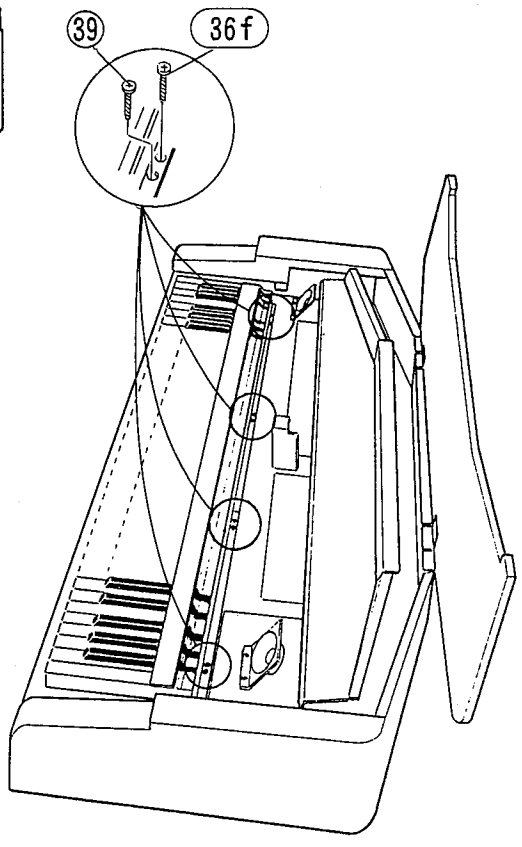

(Fig.14)

17 Pedal Assembly Removal

17-1 Remove the five (5) screws marked (30e), then the pedal assembly can be removed. (Fig. 15)

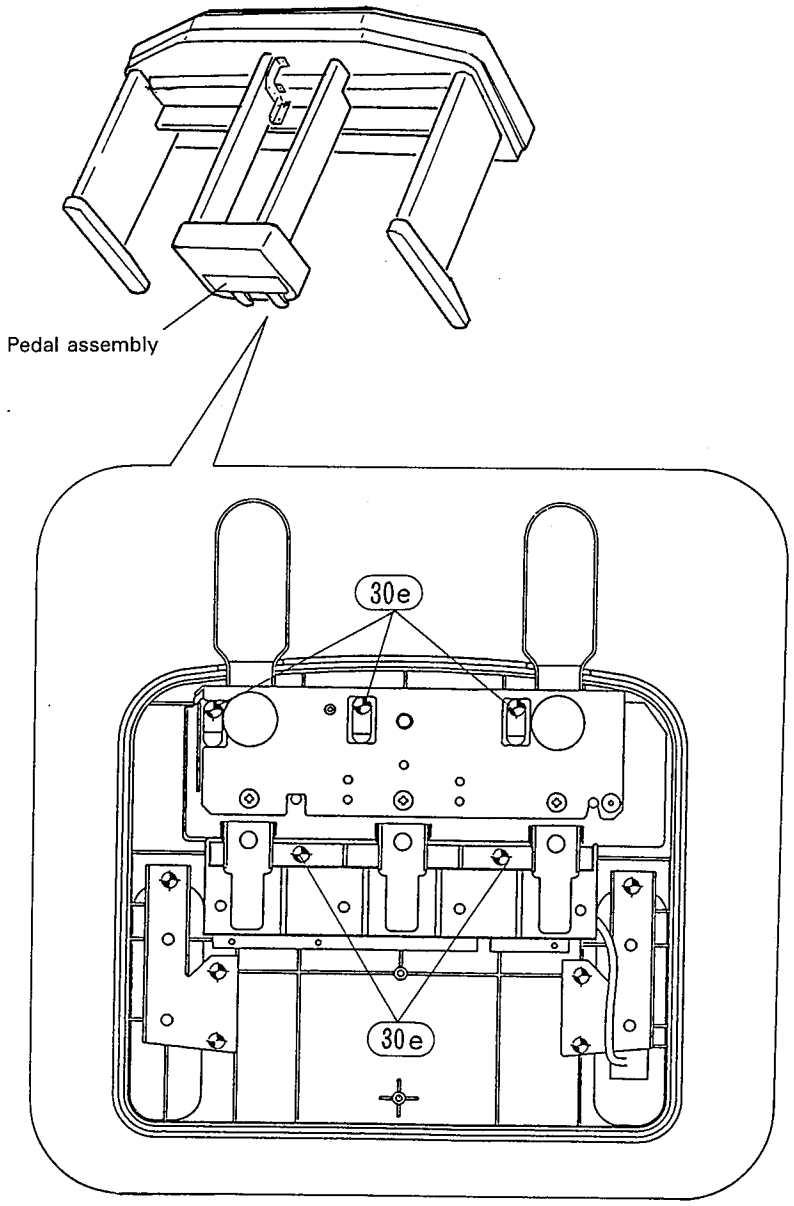

(Fig.15)

18 CVP-35 Main Unit Removal

18-1 Remove the two (2) screws marked (130a), one on the right and one on the left side under the keybed. (Fig. 16)

18-2 Remove the two (2) screws marked (120a), one on the right and one on the left side under the speaker box. (Fig.17)

18-3 Remove the four (4) screws marked (12b) retaining the side board of the pedal. (Fig. 17)

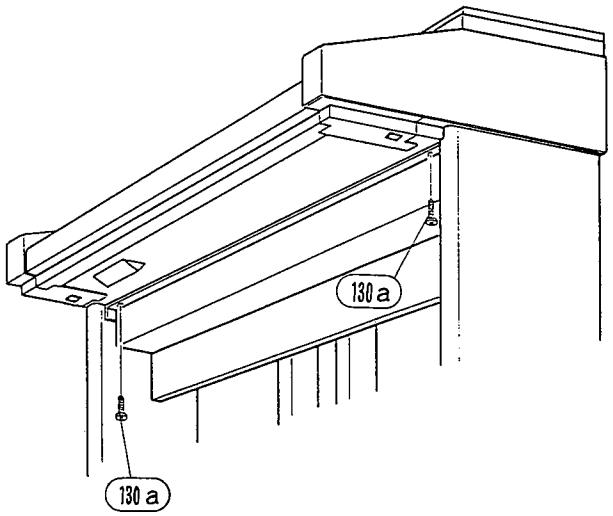

(Fig.16)

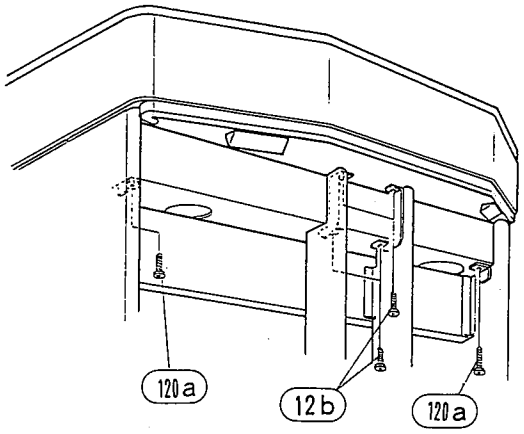

(Fig.17)

18-4 As shown in the illustration, lift the main unit up from the stand assembly. At this time the PK cable connector will be unplugged. (Fig. 18)

* Keep your fingers away from the area near the left and right side boards of the stand assembly.

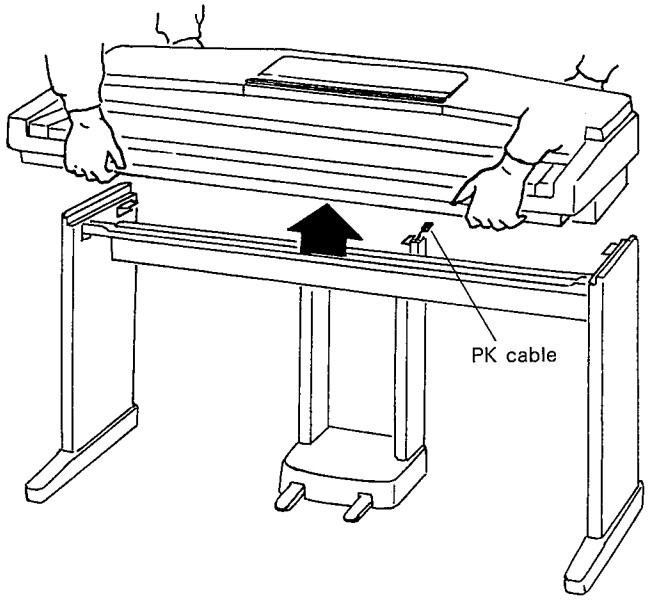

(Fig.18)

■LSI PIN DESCRIPTION

• **HD6475328CP-10** <H8/532> (XJ200A00) CPU (Central Processing Unit)

PIN NO.	NAME	I/O	FUNCTION	PIN NO.	NAME	I/O	FUNCTION
1	XTAL	I	Clock	43	A8	O	Address bus
2	Vss	I	Ground	44	A9	O	
3	P10/ϕ	O	System clock	45	A10	O	
4	P11/E	O	Enable	46	A11	O	
5	P12	I	Port 1	47	A12	O	
6	P13	I		48	A13	O	
7	P14/$\overline{WAIT}$	I	Wait	49	A14	O	
8	P15/$\overline{IRQ0}$	I	Interrupt request 0	50	A15	O	
9	P16/$\overline{IRQ1}$	I	Interrupt request 1	51	A16	O	
10	$\overline{P17}$	I/O	Port 1	52	A17	O	
11	$\overline{AS}$	O	Address strobe	53	A18	O	
12	R/$\overline{W}$	O	Read/Write	54	A19	O	
13	$\overline{DS}$	O	Data strobe	55	Vcc		Power supply
14	$\overline{RD}$	O	Read control	56	P70	I/O	Port 7
15	$\overline{WR}$	O	Write control	57	P71	I/O	
16	Vcc		Power supply	58	P72	I/O	
17	MD0	I	Mode control	59	P73	I/O	
18	MD1	I		60	P74	I/O	
19	MD2	I		61	P75	I/O	
20	$\overline{STBY}$	I	Standby	62	P76	I/O	
21	$\overline{RES}$	I	Reset	63	P77	I/O	
22	NMI	I	Non-maskable interrupt	64	Vss		Ground
23	NC			65	AVss		Analog ground
24	Vss		Ground	66	AN0	I	Port 8
25	D0	I/O	Data bus	67	AN1	I	
26	D1	I/O		68	AN2	I	
27	D2	I/O		69	AN3	I	
28	D3	I/O		70	AN4	I	
29	D4	I/O		71	AN5	I	
30	D5	I/O		72	AN6	I	
31	D6	I/O		73	AN7	I	
32	D7	I/O		74	AVcc		Analog power supply
33	A0	O	Address bus	75	P90	I/O	Port 9
34	A1	O		76	P91	I/O	
35	A2	O		77	P92	I/O	
36	A3	O		78	P93	I/O	
37	A4	O		79	P94	I/O	
38	A5	O		80	P95/TXD	O	Transmit data
39	A6	O		81	P96/RXD	I	Receive data
40	A7	O		82	P97	I/O	
41	Vss		Ground	83	Vss		Ground
42	Vss			84	EXTAL	I	Clock

• YSF206 (XI069B00) AVF1 (Advanced Vector Filter)

Pin No.	Name	I/O	Function	Pin No.	Name	I/O	Function
1	D6	I/O	Data bus	51	VD5	I	Vpp data input
2	NC			52	NC		
3	NC			53	NC		
4	NC			54	NC		
5	NC	I/O		55	VD6	I	
6	D5	I/O		56	VD7	I	
7	D4	I/O		57	VD8	I	
8	D3	I/O		58	VD9	I	
9	D2	I/O		59	VD10	I	
10	D1			60	NC		
11	NC			61	VD11	I	
12	DO	I/O		62	VD12	I	
13	GND		Ground	63	VD13	I	
14	GND			64	NC		
15	NC			65	NC		
16	NC			66	GND		Ground
17	$\overline{CS}$	I	Chip select	67	GND		
18	$\overline{WR}$	I	Write control	68	NC		
19	$\overline{RD}$	I	Read control	69	VD14	I	Vpp data input
20	S/M	I	Slave/Master	70	VD15	I	
21	A4	I	Address bus	71	TEST IN	I	Test pin
22	A3	I		72	TEST OUT	O	
23	A2	I		73	SO0		Serial data output
24	A1	I		74	SO1	O	
25	A0	I		75	HCLKO	O	Half clock output
26	NC			76	NC		
27	NC			77	NC		
28	NC			78	NC		
29	VNP	I	Vpp new parameter	79	$\overline{SYOD}$	O	Synchronizer output with delay
30	VFMO	I	Vpp filter mode	80	SSYO	O	Slow synchronizer
31	VFM1	I		81	$\overline{FS}$	O	Frequency, sampling
32	VGM0	I	Vpp gain mode	82	$\overline{SYWI}$	I	Sychronizer input
33	VGM1	I		83	MCLKI	I	Master clock
34	VE/O	I	Vpp even/odd input	84	RNSI1	I	N-sys mix rear serial input
35	VCHO	I	Vpp channel input	85	NC		
36	NC			86	RNSIO	I	
37	VCH1	I		87	FNSI1	I	N-sys mix front serial input
38	VDD		Power supply	88	NC		
39	NC			89	NC		
40	VDD			90	VDD		
41	NC			91	VDD		
42	VCH2	I	Vpp channel input	92	NSi1	I	N-sys serial data input
43	NC			93	FNSI0	I	N-sys mix front serial input
44	VCH3	I		94	NC		
45	VD0	I	Vpp data input	95	NSI0	I	N-sys serial data input
46	VD1	I		96	$\overline{IC}$	I	Initial clear
47	NC			97	KOI	I	Key on input
48	VD2	I		98	NC		
49	VD3	I		99	KOO	O	Key on output
50	VD4	I		100	D7	I/O	Data bus

(* Vpp : Vector parameter processor)

• YM7132 (XH235B00) OPWZ (AWM Tone Generator)

PIN NO.	NAME	I/O	FUNCTION	PIN NO.	NAME	I/O	FUNCTION
1	MELCK	O	Clock (3.2 MHz)	51	MA19	O	Wave memory address bus
2	CXOUT	O	Clock (6.4 MHz)	52	MA20	O	
3	XTAL		Crystal osc. connection	53	MA21	O	
4	EXTAL			54	MA22	O	
5	$\overline{CS}$	I	Chip select	55	MA23	O	
6	$\overline{RD}$	I	Read control	56	BOE	I	Address bus open enable
7	$\overline{WR}$	I	Write control	57	MD0	I/O	Wave memory data bus
8	$\overline{SYMWR}$	I/O	Register synch write control	58	MD1	I/O	
9	SYI/O	I	$\overline{SYW}$ in/out control	59	MD2	I/O	
10	A0	I	CPU address bus	60	MD3	I/O	
11	A1	I		61	MD4	I/O	
12	A2	I		62	MD5	I/O	
13	A3	I		63	MD6	I/O	
14	A4	I		64	MD7	I/O	
15	Vss		Ground	65	MD8	I/O	
16	D0	I/O	CPU data bus	66	Vss		Ground
17	D1	I/O		67	MD9	I/O	Wave memory data bus
18	D2	I/O		68	MD10	I/O	
19	D3	I/O		69	MD11	I/O	
20	D4	I/O		70	MD12	I/O	
21	D5	I/O		71	MD13	I/O	
22	D6	I/O		72	MD14	I/O	
23	D7	I/O		73	MD15	I/O	
24	TEO1	O	Test pin	74	NSI0	I	N-sys input 0
25	TEO2	O		75	NSO0	O	N-sys output 0
26	TEA2	I/O	Test pin	76	NSI1	I	N-sys input 1
27	NC			77	NSO1	O	N-sys output 1
28	NC			78	KONIN	I	Key on, $\overline{LFO}$ on input
29	NC			79	KONOUT	O	Key on, $\overline{LFO}$ on output
30	TESE	I/O	Test pin	80	SI0	I	Serial data input
31	MA0	O	Wave memory address bus	81	$\overline{SI1}$	I	
32	MA1	O		82	$\overline{CRS}$	O	CD counter reset
33	MA2	O		83	CDO	O	Control data
34	MA3	O		84	SO0	O	Serial data output
35	MA4	O		85	SO1	O	
36	MA5	O		86	SO2	O	
37	MA6	O		87	SO3	O	
38	MA7	O		88	TEAL	I/O	Test pin
39	MA8	O		89	TERE	I/O	
40	VDD		Power supply	90	VDD		Power supply
41	MA9	O	Wave memory address bus	91	TENR	I/O	Test pin
42	MA10	O		92	TEAE	I/O	
43	MA11	O		93	TEAR	I/O	
44	MA12	O		94	TEOE	I/O	
45	MA13	O		95	TEI2	I	Test pin
46	MA14	O		96	TEI1	I	
47	MA15	O		97	$\overline{IC}$	I	Initial clear
48	MA16	O		98	$\overline{IRQ}$	O	Interrupt request
49	MA17	O		99	M/S	I	SYNWR in/out control
50	MA18	O		100	$\overline{SYW}$	I/O	Synch signal

• YM6633 (XH543A00) KSN (Key Scanner)

PIN NO.	NAME	I/O	FUNCTION	PIN NO.	NAME	I/O	FUNCTION
1	XIN	I	Clock	33	DB0	I/O	Data bus
2	XOUT	O		34	DB1	I/O	
3	MK15	I	Keyboard 2nd make contact	35	DB2	I/O	
4	MK14	I		36	DB3	I/O	
5	MK13	I		37	DB4	I/O	
6	MK12	I		38	DB5	I/O	
7	MK11	I		39	DB6	I/O	
8	MK10	I		40	DB7	I/O	
9	MK05	I	Keyboard 1st make contact	41	AD0	I	Address bus
10	MK04	I		42	AD1	I	
11	MK03	I		43	AD2	I	
12	MK02	I		44	$\overline{CS}$	I	Chip select
13	MK01	I		45	$\overline{WR}$	I	Write control
14	MK00	I		46	$\overline{RD}$	I	Read control
15	BK0	O	Keyboard block	47	PA0	O	Port A
16	BK1	O		48	PA1	O	
17	BK2	O		49	PA2	O	
18	BK3	O		50	PA3	O	
19	BK4	O		51	PA4	O	
20	BK5	O		52	PA5	O	
21	BK6	O		53	PA6	O	
22	BK7	O		54	PA7	O	
23	Vss		Ground	55	VSS	I	Ground
24	BK8	O	Keyboard block	56	PB0	O	Port B
25	BK9	O		57	PB1	O	
26	BK10	O		58	PB2	O	
27	BK11	O		59	PB3	O	
28	BK12	O		60	PB4	O	
29	BK13	O		61	PB5	O	
30	BK14	O		62	XCLK	O	Clock for CDO
31	$\overline{IC}$	I	Initial clear	63	CDO	O	Control data
32	Vss		Ground	64	VDD		Power supply

• YM3028A (XE789A00) DAL2 (Digtal Analog Converter Logic)

PIN NO.	NAME	I/O	FUNCTION	PIN NO.	NAME	I/O	FUNCTION
1	VDD		Power supply	13	to Buff	O	Analog output to buffer amp.
2	SYW	I	Synch pulse	14	MP	I	Middle point 1/2 VDD bias
3	DGND		Digital ground	15	RC	O	Bias compensation
4	$\overline{CLK}$	I	Clock	16	RB	O	Bias – R
5	NC	O	Crash detect	17	AGND		Analog ground
6	NC	O	Zero detect	18	AVDD		Analog power supply
7	OUT 4	O	Analog signal output	19	NC	I	Limiter enable
8	OUT 3	O		20	IN 1	I	Digital data input
9	OUT 2	O		21	IN 2	I	
10	OUT 1	O		22	SEL 1	I	Data shift
11	NS	I	Chip test	23	$\overline{SEL\ 2}$	I	
12	COM	I	Analog input from buffer amp.	24	$\overline{IC}$	I	Initial clear

■IC BLOCK DIAGRAM

- **SN74HC00N** (IR000050)
  Quad 2 Input NAND

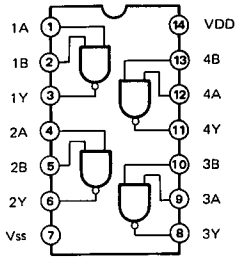

- **TC40H004P** (IG051000)
  Hex Inverter

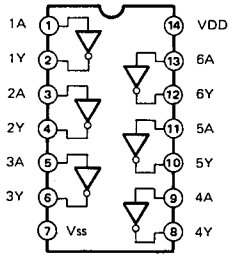

- **SN74HC132N** (IR013250)
  Quad 2-Input NAND Schmitt Trigger

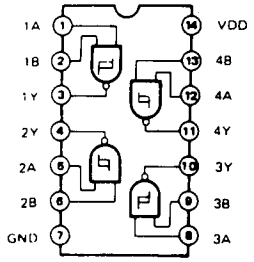

- **SN74HC139N** (IR013950)
  Dual 2 to 4 Demultiplexer

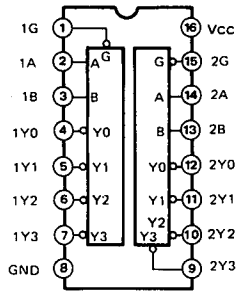

- **μPC4570HA** (XB247A00)
  Dual Operational Amplifier

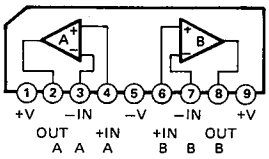

- **NJM4560ED** (IG040000)
  Dual Operational Amplifier

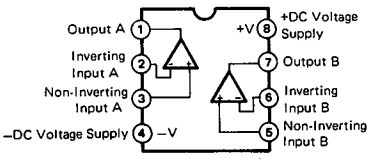

- **M5216L** (XB419A00)
  Dual Operational Amplifier

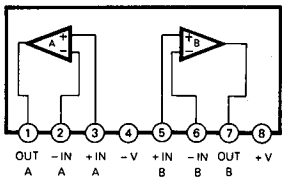

- **M5229P** (XG203A00)
  7 Band Graphic Equalizer

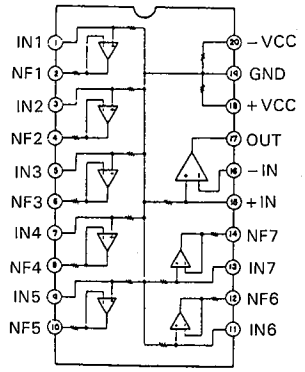

■TEST PROGRAM

1. HOW TO ENTER THE TEST PROGRAM

While pressing [A-1] and [C7] keys of the keyboard turn on the power switch of the CVP35, the version of the MAIN ROM will be displayed and then the system will run the INITIAL TEST routine.

2. INITIAL TEST

The following tests will be performed automatically when the test program is initiated.

A. The 2nd make contact of keyboard switch test
B. Pedal switch off test
C. Panel switch off test

DISPLAY OF TEST RESULTS
If each test checks OK then the test program proceeds to the test program entry mode.

If test A is NG, the system won't enter the test program mode.
If test B is NG, the PIANO 1 LED will blink.
If test C is NG, the CLAVINOVA TONE LED will blink.

3. TEST PROGRAM

3-1 SYSTEM RESET
If you press [B-1] key, you will exit the test mode and return to normal operation.
3-2 PANEL LED TEST
To initiate this test press and hold [D0] key, and check that each LED light once in succession from the left end of the unit.
3-3 EXTERNAL RAM TEST
Pressing [F0] key performs the RAM test. If an error is detected, the E. PIANO LED will blink.
3-4 MIDI TEST
After connecting the MIDI IN to MIDI OUT via MIDI cable, press [G0] key to execute this test. If the proper code is not received, the HARPSICHORD LED will blink to indicate an error occurs.
3-5 1kHz SOUND OUTPUT (OPWZ)
Check that sine waves of 1kHz being output from OPWZ or IC 9.
To initiate this test, press [A0] key.
(L channel: -3dB, R channel: -3dB)
3-6 440kHz SOUND OUTPUT (OPWZ)
Check that sine waves of 440Hz being output from OPWZ or IC 9.
To initiate this test, press [B0] key.
(L channel: -1.5dB, R channel: -4.5dB)
3-7 SOUND DIMINISH
If the F1 key is pressed, the sound will diminish.
3-8 440kHz SOUND OUTPUT (OPWZ)
Check that sine waves of 440Hz being output from OPWZ or IC 9.
To initiate this test, press [C3] key.
(L channel: -0dB, R channel: -∞dB)
3-9 440kHz SOUND OUTPUT (OPWZ)
Check that sine waves of 440Hz being output from OPWZ or IC 9.
To initiate this test, press [G3] key.
(L channel: -∞dB, R channel: -0dB)
3-10 16 SOUND GENERATION TEST (OPWZ)
Check that the 16 notes correctly sound from OPWZ or IC9.
To initiate this test press [C4] key.

INTIALIZATION

While pressing [C7] key of the keyboard turn on the power switch of the CVP35, memorized data will be initialized.

■MIDI DATA FORMAT

1. NOTE ON/OFF

Data format: [9xH] -> [kk] -> [vv]

9xH = Note ON event (x = channel number)
kk = Note number (21 ~ 108 = A-1 ~ C7)
vv = Velocity (Key ON = 1 ~ 127. Key OFF = 0)

* Note OFF event format [8xH] -> [kk] -> [vv] also recognized (reception only, vv = 0 ~ 127).

2. CONTROL CHANGE & MODE MESSAGES

Data format: [BxH] -> [cc] -> [dd]

BxH = Control event (x = channel number)
cc = Control number (or mode message number)
dd = Control value

cc	PARAMETER	dd
01H (01)	Modulation (Vibrato)	00H ~ 0FH = Off 10H ~ 1FH = (±3.3 cent) 20H ~ 2FH = (±6.74 cent) 30H ~ 3FH = (±10.1 cent) 40H ~ 4FH = (±13.5 cent) 50H ~ 5FH = (±20 cent) 60H ~ 6FH = (±40 cent) 70H ~ 7FH = (±80 cent)
07H (07)	Volume	00000000 = -∞ 01101111 = -3 dB 01111111 = ±0 dB
0AH (10)	Pan pot	00H ~ 1FH = left 3 20H ~ 2FH = left 2 30H ~ 3FH = left 1 40H ~ 47H = center 47H ~ 4FH = voice fixed 50H ~ 5FH = right 1 60H ~ 6FH = right 2 70H ~ 7FH = right 3
0BH (11)	Expression	00000000 = -∞ 01101111 = -3 dB 01111111 = ±0 dB
40H (64)	Damper pedal	0 ~ 3FH = OFF; 40H ~ 7FH = ON
42H (66)	Sostenuto pedal	0 ~ 3FH = OFF; 40H ~ 7FH = ON
43H (67)	Soft pedal	0 ~ 3FH = OFF; 40H ~ 7FH = ON
79H (121)	Reset all controllers	0
7AH (122)	Local ON/OFF	0 = OFF; 7FH = ON
7BH (123)	All notes OFF	0
7CH (124)	OMNI OFF/All notes OFF	0
7DH (125)	OMNI ON/All notes OFF	0

* 7AH, 7BH, 7CH and 7DH are receive only.

3. PROGRAM CHANGE

Data format: [CxH] -> [dd]

CxH = program event (x = channel number)
dd = Program number

Panel Voices

dd	VOICE	dd	VOICE
00H	PIANO	06H	STRINGS
01H	CLAVINOVA TONE	07H	ORGAN
02H	E.PIANO	08H	CHOIR
03H	HARPSICHORD	09H	UPRIGHT BASS
04H	VIBES	0AH	ELEC BASS
05H	GUITAR	0BH	DRUMS

Voices 13 — 53

dd	VOICE	dd	VOICE
0CH	BRASS	21H	PIANO BRIGHT
0DH	POP BRASS	22H	PIANO SOFT
0EH	TRUMPET	23H	E. PIANO DX (BRIGHT)
0FH	MUTE TRUMPET	24H	SYNTH CRYSTAL
10H	HORN	25H	CELESTA
11H	SAX	26H	MARIMBA
12H	SAX SOFT	27H	FOLK GUITAR
13H	CLARINET	28H	JAZZ GUITAR 1
14H	OBOE	29H	JAZZ GUITAR 2
15H	FLUTE	2AH	ROCK GUITAR 1
16H	ACCORDION	2BH	ROCK GUITAR 2
17H	HARMONICA	2CH	MUTE GUITAR
18H	STRINGS SOFT	2DH	BANJO
19H	VIOLIN	2EH	PIZZICATO
1AH	VIOLIN HARD	2FH	HARP
1BH	FULL ORGAN	30H	UPRIGHT BASS SOFT
1CH	JAZZ ORGAN	31H	ELEC BASS SOFT
1DH	SYNTH BRASS	32H	ELEC BASS HEAVY
1EH	SYNTH WOOD	33H	SYNTH BASS
1FH	SYNTH STRINGS	34H	TIMPANI
20H	SYNTH VOCAL		

* No voice change is made when dd > 34H.

4. SYSTEM REALTIME MESSAGES

Active Sensing (FEH)

Transmitted every 200 milliseconds. If no data received for more than 400 milliseconds after FEH, a NOTE OFF occurs.

Timing Clock (F8H)
Start (FAH)
Stop (FCH)

5. SYSTEM EXCLUSIVE MESSAGES

(1) Clavinova Messages

Data Format: [F0H] -> [43H] -> [73H] -> [29H] -> [nn] -> [F7H]

43H = YAMAHA ID
73H = CLAVINOVA ID
29H = CVP-35 ID
nn = Substatus

nn	SEND/RECEIVE DATA
02H	Internal clock (receive only)
03H	External MIDI clock (receive only)
06H	Precedes performance bulk data
13H	Multi-Timbre mode OFF
15H	Multi-Timbre mode ON
7nH	Receive channel change (receive only)

(2) Special Messages

Data Format: [F0H] -> [43H] -> [73H] -> [29H] -> [11H] -> [0xH] -> [cc] -> [dd] -> [F7H]

43H = YAMAHA ID
73H = CLAVINOVA ID
29H = CVP-35 ID
11H = CLAVINOVA special control code
0xH = MIDI channel number
cc = Control number
dd = Control value

cc	SEND/RECEIVE DATA	dd
08H	DUAL/SPLIT Balance	00H = lower max. 7FH = upper max.
10H	ABC Mode	00H = OFF 01H = ABC Single Finger 02H = ABC Fingered 03H = Full-Keyboard ABC
11H	Rhythm Variation	00H = OFF 01H = Variation ON
12H	Fill In Switch Event	00H = Fill to normal OFF event 01H = Fill to normal ON event 02H = Fill to variation ON event 03H = Fill to variation OFF event
13H	Intro/Ending Switch Event	00H = INTRO/ENDING OFF 01H = Intro mode on 02H = Ending mode on
14H	Split	[dd] = Split key number
15H	Rhythm Number	[dd] = Rhythm number
19H	Volume	[dd] = Volume value (0xH: x = 2 for BASS, x = 4 for CHORD1, x=5 for CHORD 2)
1AH	Rhythm Volume	[dd] = Volume value
21H	Solo Styleplay Number	00H ~ 18H = Style number
22H	Solo Styleplay	00H ~ 3FH = OFF 40H ~ 7FH = ON
5AH	DUAL SPLIT Mode	00H = OFF 01H = DUAL 02H = SPLIT (upper damper) 03H = SPLIT (lower damper) 04H = SPLIT (upper/lower damper)
5CH	DUAL SPLIT Voice	[dd] = DUAL/SPLIT voice number
5DH	Pedal Function	[dd] = Function number

(4) General Messages

a) Panel Dump Request (receive only)
Data Format: [F0H] -> [43H] -> [2nH] -> [7CH] -> [F7H]

Panel data is transmitted when the above data is received.

2nH = Panel dump request ("n" is channel number).

b) Panel Dump
Data Format: [F0H] -> [43H] -> [0nH] -> [7CH] . . . . . [F7H]

0nH = Panel dump ("n" is channel number).
7CH = Format code.

A bulk dump is performed when the above data is received.

c) Bulk Dump
Data Format: [F0H] -> [43H] -> [73H] -> [1CH] -> [06H] . . . . . [F7H]

06H = Bulk dump code.

YAMAHA [Clavinova]
Model CVP35 MIDI Implementation Chart

Date : 01/24, 1991
Version : 1.0

Function		Transmitted	Recognized	Remarks
Basic	Default	1	1	
Channel	Changed	1-16	1-16	
Mode	Default	3	1	
	Messages	X	OMNIon,OMNIoff	
		**********	X	
Note Number		21-108	21-108	
	True voice	**********	21-108	
Velocity	Note on	0 9nH,v=1-127	0 v=1-127	
	Note off	X 9nH,v=0	X	
After Touch	Key's	X	X	
	Ch's	X	X	
Pitch Bender		0	0	
Control Change	01	0	0	Modulation
	07	0	0	Volume
	10	X	0	Pan pot
	11	0	0	Expression
	64	0	0	Damper
	66	0	0	Sostenuto
	67	0	0	Soft Pedal
	121	X	0	Reset All Controllers
Program Change		0 0-52	0 0-96	
	True #	**********	0-96	
System Exclusive		0	0	
System Common	Song Pos	X	X	
	Song Sel	X	X	
	Tune	X	X	
System Real Time	Clock	0	0	
	Commands	0	0	
Aux Mes-sages	Local ON/OFF	X	0	
	All Notes OFF	X	0 (123-125) *1	
	Active Sense	0	0	
	Reset	X	X	

Notes : *1 = receive (123) if omni off or multi-timbre on

Mode 1 : OMNI ON, POLY Mode 2 : OMNI ON, MONO O : Yes
Mode 3 : OMNI OFF, POLY Mode 4 : OMNI OFF, MONO X : No

CVP-35

■BLOCK DIAGRAM

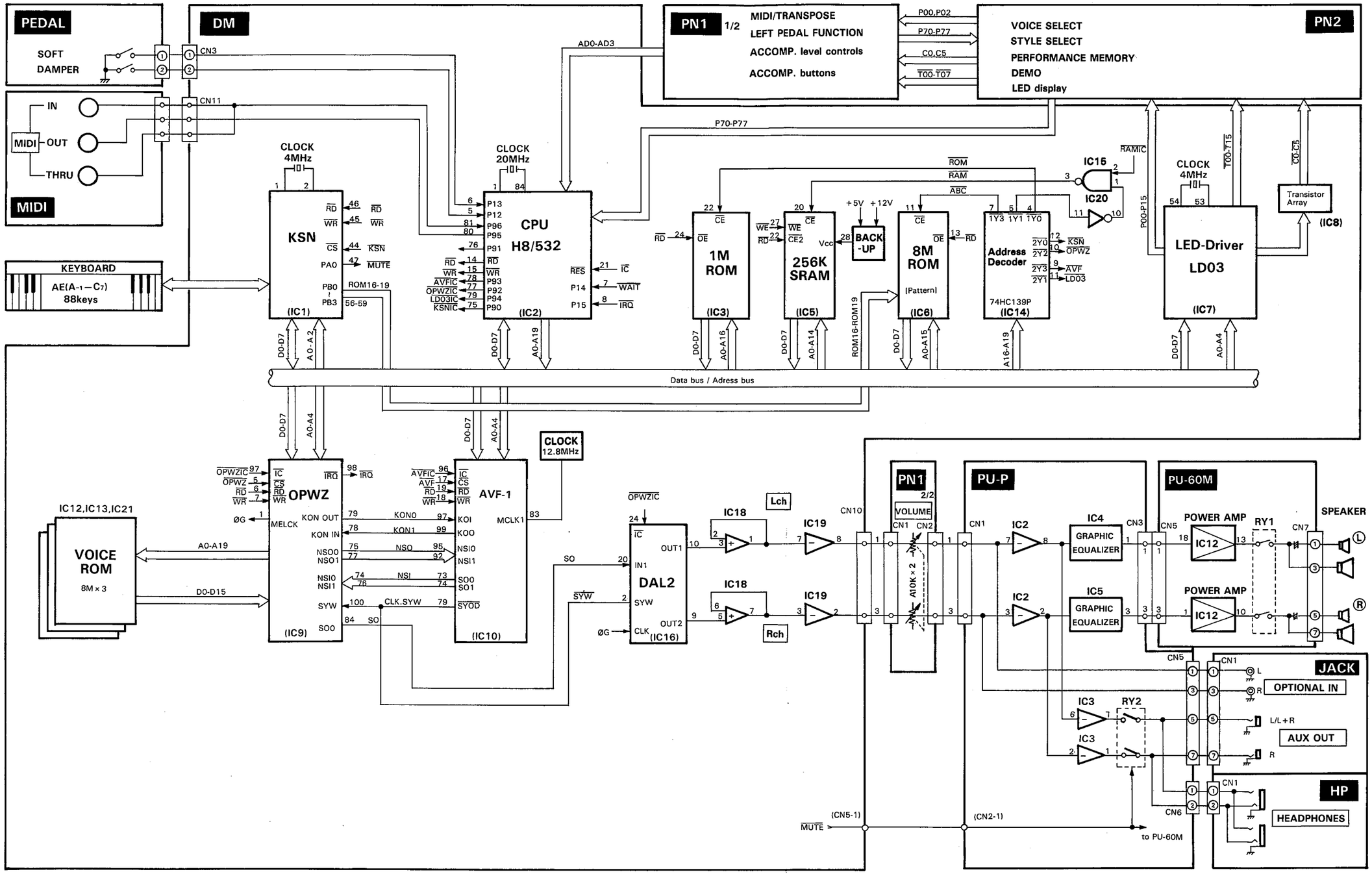

CVP-35

CVP-35

■CIRCUIT BOARDS

●DM Circuit Board

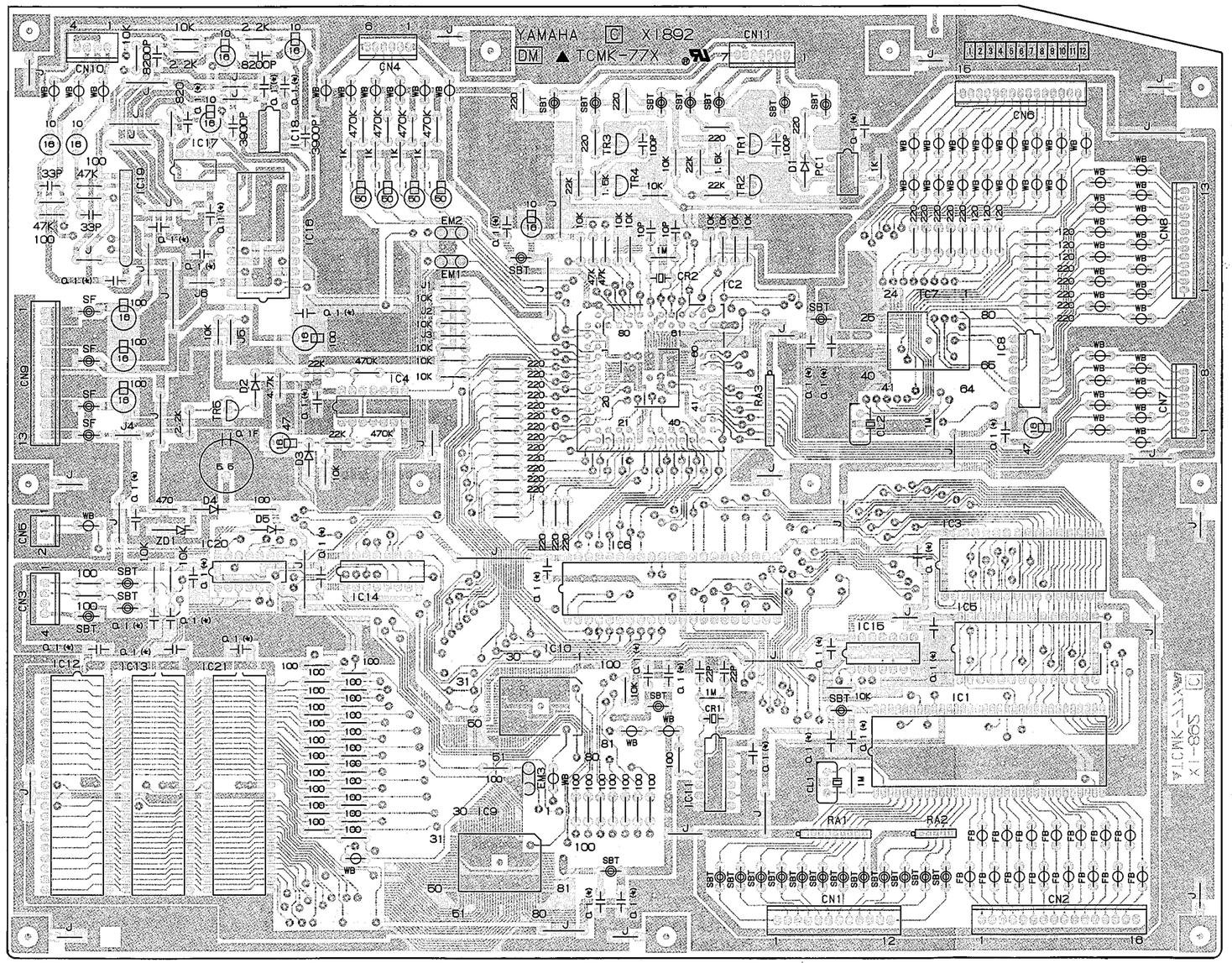

Components side

	Circuit Board :	DM (VK554500) XI892C0
1.	IC	
	IC 1:	YM6633 (XH543A00) KSN
	IC 2:	HD6475328CP10 (XJ200A00) CPU H8
	IC 3:	1M (XJ156A00) EP ROM SUB
	IC 4:	SN74HC132N (IR013250) NAND
	IC 5:	HM62256LP-8 (XI977A00) 256K SRAM or TC55257BPL-85 (XJ313A00) 256K SRAM or μPD43256AC-85L (XJ314A00) 256K SRAM
	IC 6:	LH53805A (XJ203A00) ROM 8M
	IC 7:	LC92018B-500 (XI616A00) LDO3
	IC 9:	YM7132 (XH235B00) OPWZ
	IC10:	YSF206 (XI069B00) AVF-1
	IC11,20:	TC40H004P (IG051000) INVERTER
	IC12:	LH53804A (XJ204A00) ROM 8M
	IC13:	LH53804B (XJ205A00) ROM 8M
	IC14:	SN74HC139N (IR013950) DECODER 2-4
	IC15:	SN74HC00N (IR000050) NAND
	IC16:	YM3028 (XE789A00) DAL2
	IC17,18:	NJM4560ED (IG040000) OP AMP.
	IC19:	μPC4570HA (XB247A00) OP AMP.
	IC21:	HN62408PD73 (XJ452A00) ROM 8M
2.	Photo Coupler	
	PC 1:	6N137 (VD473200)
3.	Transistor	
	TR 1~4:	2SC1740S R,S (IC174070)
	TR 5:	2SA1015 O,Y (IA101590)
4.	Transistor Array	
	IC 8:	TD62703P (VF519600)
5.	Diode	
	D 1~5:	1SS133,1SS176 (VB941200)
6.	Zener Diode	
	ZD 1:	MTZ5.6B 5.6V (VA007600)
7.	Resistor Array	
	RA 1,3:	RGLE8X103J (VF771900)
	RA 2:	RGLE4X103J (VF773500)
8.	Semiconductive Cera. Cap.	
	0.1(ヒ):	0.1μF 16V M (VH740700)
9.	Supper Capacitor	
	0.1F 5.5:	0.1μF5.5VFYD0H (VI055000)
10.	Coil	
	SF:	10μH SF-T3-20-01 (VJ528500)
	SBT:	20μH FL5R200QNT (VB835000) or 20μH SBT-0460T (VD473700) or 60μH SBT-0260TF (VF968800)
11.	Ceramic Resonator	
	CL 1,2:	CST4.00MGW040 (VI653000)
12.	Quartz Crystal Unit	
	CR 1:	12.8M AT-49 (VI460600)
	CR 2:	20.0000M AT-49 (VI927300)
13.	Ferrite Bead	
	FB:	BL02RN1-R62T4 (GE300610)
	WB:	BL02RN2-R62T4 (GE300670)
14.	Jumper Wire	

IC3	J1	J2	J3
O	X	X	X
X	O	O	X

(O:installed X:not installed)

●PN1 Circuit Board

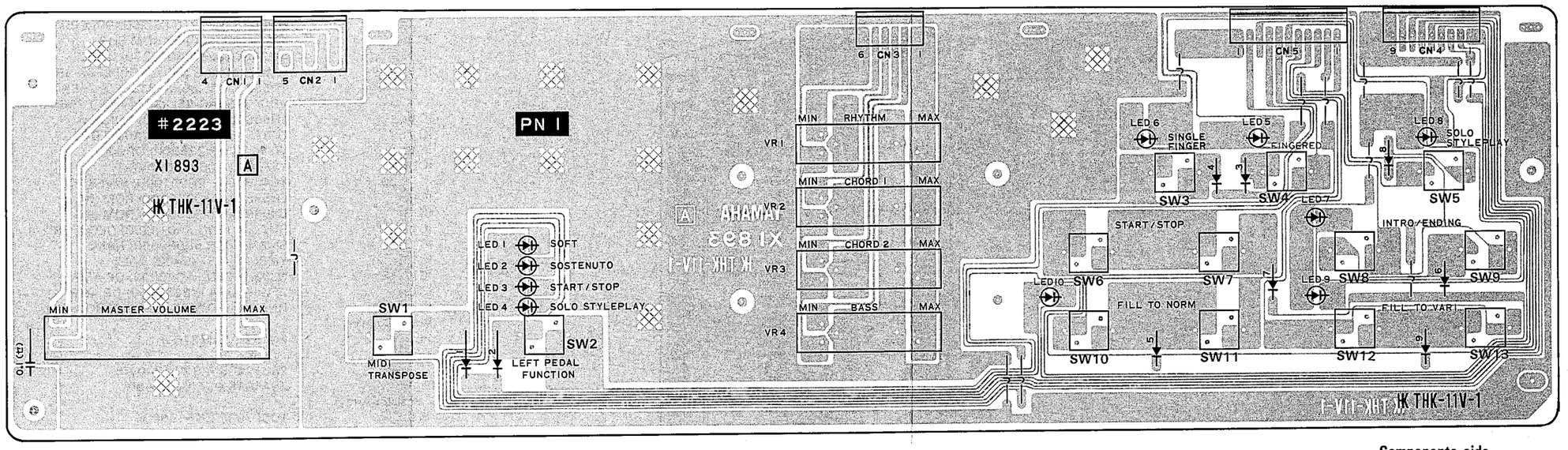

Components side

Circuit Board : PN1 (NX005610) XI893A0

1. Diode
   Marked —▷|— : 1SS133, 1SS176 (VB941200)
2. LED
   LED 1~10: SLZ-190B-03 RE (VD180000) 10pcs

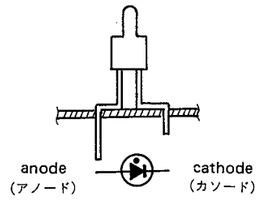

3. Slide Pot.
   VR 1~4: B10K RS15111A9 (VK769700) ACCOMPANIMENT
   MASTER VOLUME: A10K RS30112A9 (VK369000) MASTER VOLUME
4. Push Switch
   SW 1~13: KEC10901 (KA906550) 13pcs

CVP-35

●PN2 Circuit Board

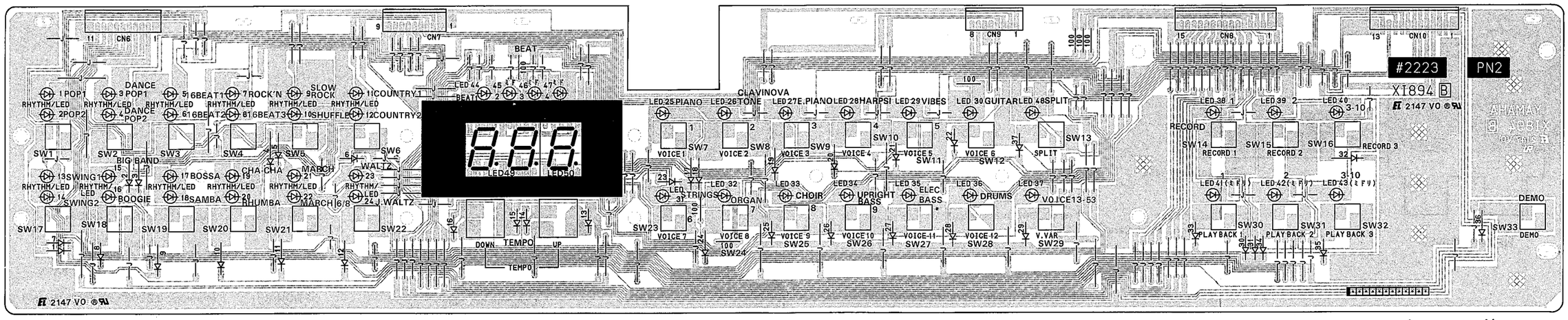

Components side

Circuit Board : PN2 (NX005620) XI894B0

1. Diode
   Marked ⊣◁⊢ : 1SS133,1SS176 (VB941200)
2. LED
   LED 1~40,44,48: SLZ-190B-03 RE (VD180000) 42pcs
   LED41~43,45~47: SLZ290B03T2 GR (VG778600) 6pcs

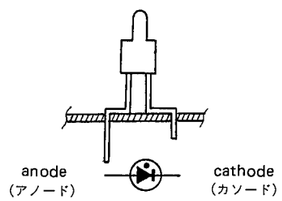

3. Push Switch
   SW 1~33: KEC10901 (KA906550) 33pcs
   SW34,35: SKHFAA (VK793700) TEMPO
4. LED Display
   LED49: SL-1273 (IF009320) 7seg×2
   LED50: SL-1109 (VK843400) 7seg×1

●HP Circuit Board

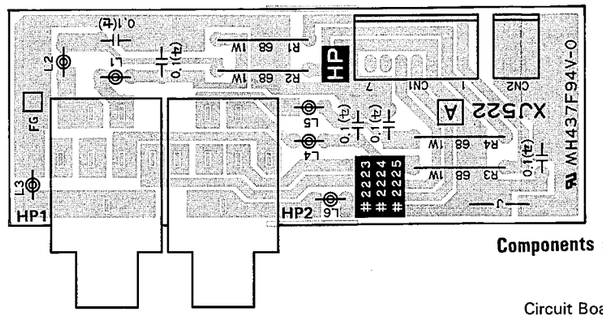

Components side

HEADPHONES

	Circuit Board :	HP (NX005640) XJ522A0
1.	Semiconductive Cera. Cap.	
	0.1(±):	0.1μF 16V Z (FZ004110)
2.	Coil	
	L 1~6:	20μH FL5R200QN (VB971100)
3.	Phone Jack	
	HP 1,2:	YKB21-5006 (LB101870) HEADPHONES

●MIDI Circuit Board

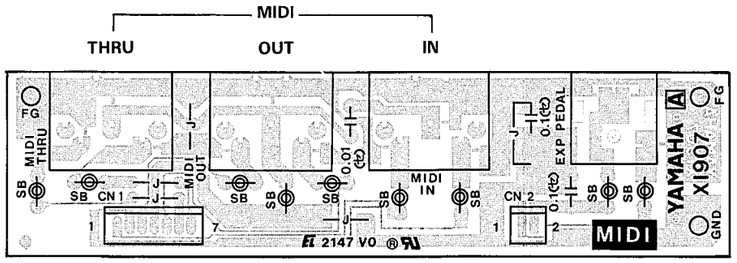

Components side

	Circuit Board :	MIDI (NX005660) XI907A0
1.	Coil	
	SB:	60μH SBT-0260TF (VF968800)
2.	DIN Jack	
	MIDI/IN,OUT,THRU:	5P YKF51-50 (VB312500)

* CN2,EXP pedal jack : not installed

●JACK Circuit Board

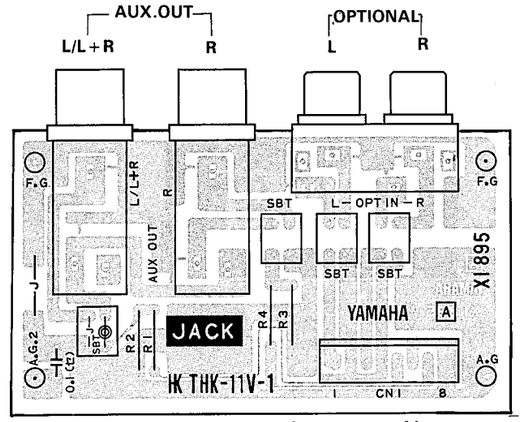

Components side

	Circuit Board :	JACK (NX005630) XI895A0
1.	Coil	
	SBT:	80μH SBT-0180W (VF456600)
	⊖ SBT:	60μH SBT-0460T (VD473700) or 20μH FL5R2000NT (VB835000)
2.	Phone Jack	
	OPTIONAL:	Monaural (LB202330) OPTIONAL IN/L,R
3.	Pin Jack	
	AUXOUT:	YKC21-0188 (VI145300) AUX./L(L+R),R

HP: 2NA-VL33290
MIDI: 2NA-VK55860 ⚠
JACK: 2NA-VK55500 ⚠

CVP-35

●PU60M Circuit Board

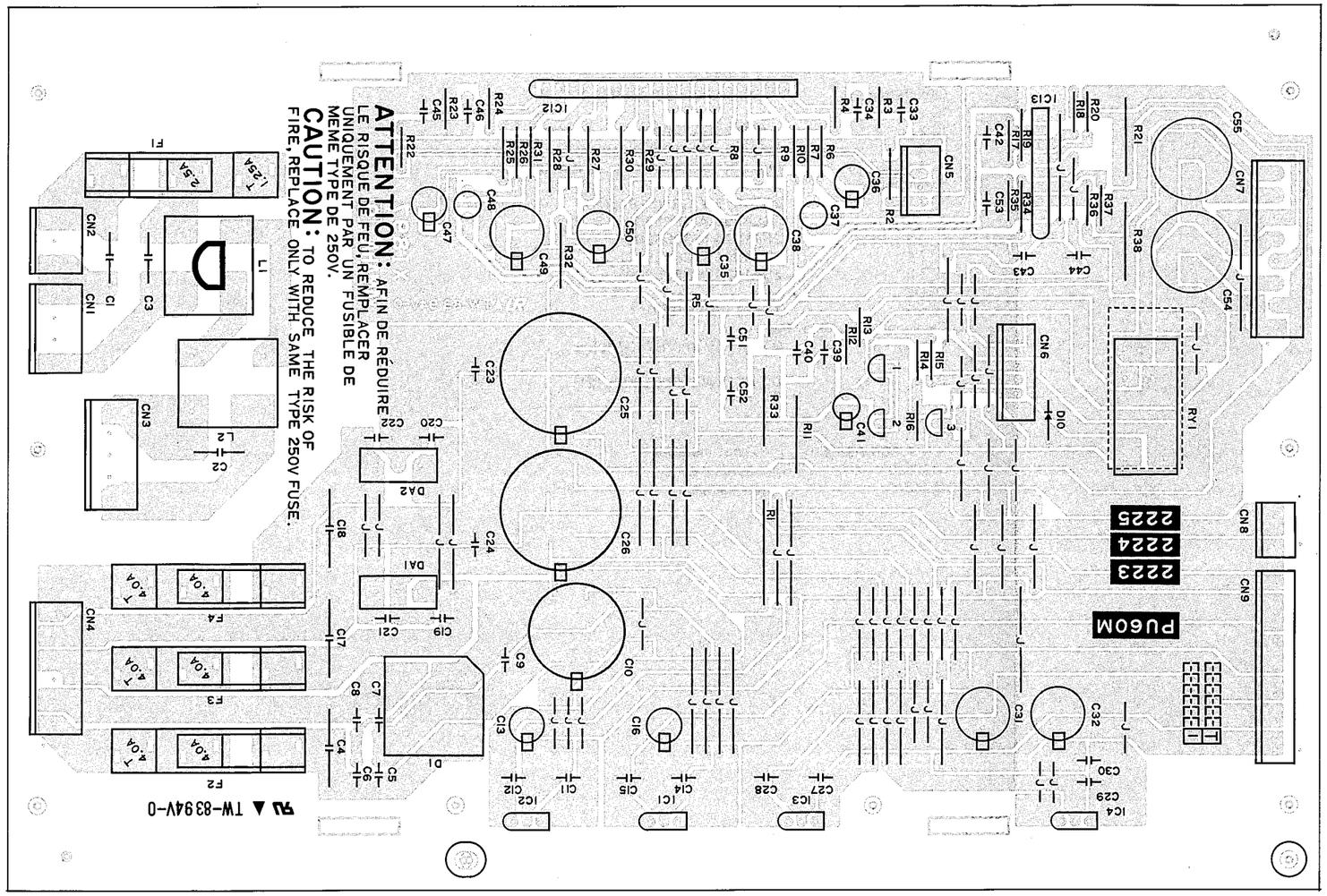

Components side

Circuit Board : PU60M (VK560800) XI897B0 J,X,M
PU60M (VK560900) XI897B0 U,C
PU60M (VK561000) XI897B0 A,B,H

1. IC
   - IC 1,2: NJM7805FA (XC719A00) 5V REGULATOR
   - IC 3: NJM78M12FA (XD341A00) +12V REGULATOR
   - IC 4: NJM79M12FA (XD343A00) -12V REGULATOR
   - IC12: STK4151V (XC038A00) POWER
   - IC13: μPC4570HA (XB247A00) OP AMP.
2. Transistor
   - DD 1,2: 2SC1815 Y,GR (IC1815M0)
   - DD 3: 2SC3616 L,K (VD959200)
3. Diode
   - D10: 11ES4 (VB481900)
4. Diode Stack
   - DA 1: 1D2Z1 2A 200V (VB493300)
   - DA 2: 1D2C1 2A 200V (VB493200)
   - D 1: S4VB20 2.6A200V (IH001090) or 4D4B42 3A 200V (IH001790)
5. Metal Oxide Film Resistor
   - R11,33: 4.7Ω 2W J (VC755500)
   - R21,38: 0.22Ω 2W J (VC751900)
6. Fuse Resistor
   - R30: 100Ω 1/4 J (HW095100)
7. Electrolytic Cap.
   - C10: 6800μF 16V (UJ739680)
   - C25,26: 4700μF 35V (UJ759470)
8. Ceramic Cap.
   - C 1: 0.01μF 400V (FI384100)
   - C 2,3: 4700pF 400V (FI383470)
9. Mylar Cap.
   - C17,18: 0.47μF 100V K (FC085470)
10. Semiconductive Cera. Cap.
    - 0.1μF 50V Z (VD287800)
11. Coil
    - L 1: 10μH SU10V-D20010 (VF790900)
    - L 2: 10mH SU10V-20010 (VD293400)
12. Relay
    - RY 1: DC G5Z-2A (VK881200) 12V or DC DH12D2-OS(M) (VK881300) 12V
13. Fuse
    - F 1: T 2.50A 250V (KB000420) J,X,M
    - F 1: T 2.50A 250V (KB002680) U,C
    - F 1: T 1.25A 250V (KB000680) A,B,H
    - F 2,3,4: T 4.00A 250V (KB000380) J,X,M
    - F 2,3,4: T 4.00A 250V (KB002640) U,C
    - F 2,3,4: T 4.00A 250V (KB000790) A,B,H

●PU-P Circuit Board

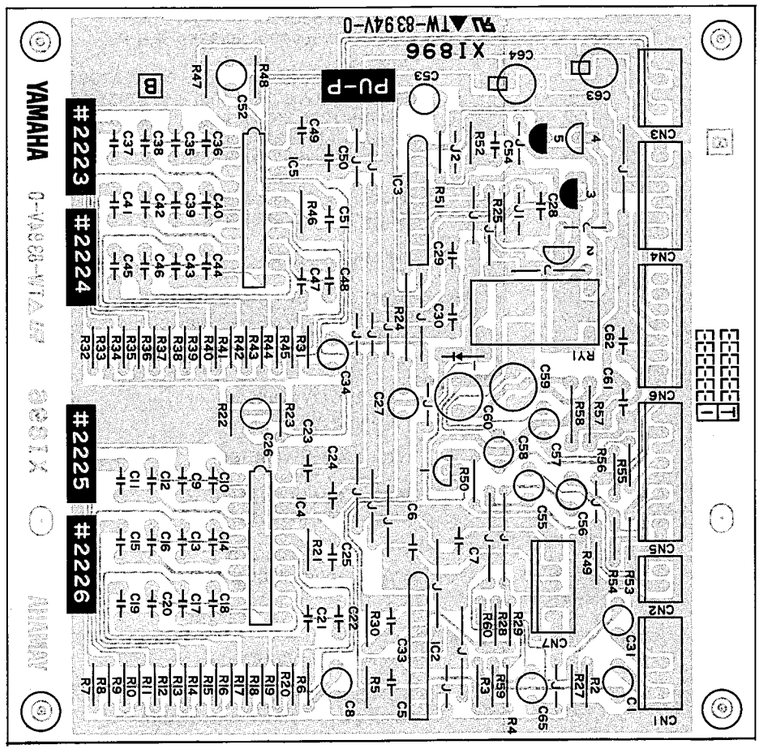

Components side

CVP-35

	Circuit Board :	PU-P (NX005650) XI896B0
1.	IC	
	IC 2:	μPC4570HA (XB247A00) OP AMP.
	IC 3:	M5216L (XB419A00) OP AMP.
	IC 4,5:	M5229P (XG203A00) G. EQUALIZER
2.	Transistor	
	1:	2SC1815 Y,GR (IC1815M0)
	2:	2SC4391 (VG805500)
	3:	2SA1674 (VG805300)
	4:	2SC4391 (VG805500)
	5:	2SA1674 (VG805300)
3.	Diode	
	1:	11ES4 (VB481900)
4.	Semiconductive Cera. Cap.	
	0.1(セ)	0.1μF 16V M (VH740700)
5.	Relay	
	RY 1:	DC RY12W (KC001900) 12V

* CN 7,C65,R59,60 ····· not installed
R57,58 ····· Jumper wire
J 1,2 ····· not installed

Clavinova

CVP-35

PARTS LIST

Notes DESTINATION ABBREVIATIONS

J	: Japanese model	A	: Australian model
U	: U.S. model	E	: European model
C	: Canadian model	D	: German model
X	: General model	B	: British model
M	: South African model	I	: Indonesian model
H	: North European model		

■ELECTRICAL PARTS

	Ref. No.	Part No.	Description		部品名	Remarks	ランク
*		VK554500	Circuit Board	DM	DMシート	CVP35	59
* *		NX005610	Circuit Board	PN1	PN1シート		
* *		NX005620	Circuit Board	PN2	PN2シート		
* *		NX005640	Circuit Board	HP	HPシート		
* *		NX005660	Circuit Board	MIDI	MIDIシート		
*		NX005630	Circuit Board	JACK	JACKシート		
		VF850800	Circuit Board	PDEAL	ペダルシート		05
		VC796500	Circuit Board	AE88L	AE88Lシート		09
		VC796300	Circuit Board	AEC	AE Cシート		10
		VC796600	Circuit Board	AE88H	AE88Hシート		08
*		VK561700	Power Amplifier	PU60	PU60Assy	J,X,M	
* *		VK561800	Power Amplifier	PU60	PU60Assy	U,C	
* *		VK561900	Power Amplifier	PU60	PU60Assy	A,B,H	
* *		VK560800	Circuit Board	PU60M	PU60Mシート	J,X,M	20
* *		VK560900	Circuit Board	PU60M	PU60Mシート	U,C	20
* *		VK561000	Circuit Board	PU60M	PU60Mシート	A,B,H	20
* *		NX005650	Circuit Board	PU-P	PU-Pシート		
*		VK554500	Circuit Board	DM	DMシート		59
		IG040000	IC	NJM4560ED	IC	OP AMP.	04
		XB247A00	IC	μPC4570HA	IC	OP AMP.	01
		IG051000	IC	TC40H004P	IC	INVERTER	03
		IR000050	IC	SN74HC00N	IC	NAND	03
		IR013250	IC	SN74HC132N	IC	NAND	03
		IR013950	IC	SN74HC139N	IC	DECODER 2-4	05
*		XJ200A00	IC	HD6475328CP10	IC	CPU H8	20
* *		XJ203A00	IC	LH53805A	IC	ROM 8M	
* *		XJ204A00	IC	LH53804A	IC	ROM 8M	
* *		XJ205A00	IC	LH53804B	IC	ROM 8M	
* *		XJ156A00	IC	1M	IC	EP ROM SUB	18
*		XJ452A00	IC	HN62408PD73	IC	ROM 8M	
		XE789A00	IC	YM3028	IC	DAL2	10
		XH235B00	IC	YM7132	IC	OPWZ	16
		XH543A00	IC	YM6633	IC	KSN	09
*		XI069B00	IC	YSF206	IC	AVF-1	14
* *		XI616A00	IC	LC92018B-500	IC	LD03	07
* *		XI977A00	IC	HM62256LP-8	IC	256K SRAM	13
* *		XJ313A00	IC	TC55257BPL-85	IC	256K SRAM	13
* *		XJ314A00	IC	μPD43256AC-85L	IC	256K SRAM	13
		VD473200	Photo Coupler	6N137	フォトカプラ		05
*		IA101590	Transistor	2SA1015 O,Y	トランジスタ		01
		IC174070	Transistor	2SC1740S R,S	トランジスタ		01
		VF519600	Transistor Array	TD62703P	トランジスタアレイ		03
*		VB941200	Diode	1SS133,1SS176	ダイオード		01
		VA007600	Zener Diode	MTZ5.6B 5.6V	ツェナーダイオード		01
		VF771900	Resistor Array	RGLE8X103J	抵抗アレイ		01
		VF773500	Resistor Array	RGLE4X103J	抵抗アレイ		01
		VH740700	Semiconductive Cera. Cap.	0.1μF 16V M	半導体セラコン		01
		VI055000	Supper Capacitor	0.1μF5.5VFYD0H	スーパーキャパシタ		04
		VJ528500	Coil	SF-T3-20-01	コイル	10u	03
		VB835000	Coil	FL5R200QNT	コイル	20u	01
		VD473700	Coil	SBT-0460T	コイル	20u	01
		VF968800	Coil	SBT-0260TF	コイル	60u	01
		VI653000	Ceramic Resonator	CST4.00MGW040	セラミック振動子		01
		VI460600	Quartz Crystal Unit	12.8MHz AT-49	水晶振動子		03
		VI927300	Quartz Crystal Unit	20MHz AT-49	水晶振動子		03
		GE300610	Ferrite Bead	BL02RN1-R62T4	フェライトビーズ		01
		GE300670	Ferrite Bead	BL02RN2-R62T4	フェライトビーズ		02
*		NX005610	Circuit Board	PN1	PN1シート		
* *		VB941200	Diode	1SS133,1SS176	ダイオード		01
		VD180000	LED	SLZ-190B-03 RE	LED	10pcs	01
*		VK769700	Slide Pot.	B10K RS15111A9	スライドボリューム	ACCOMP. VOL.	02
		VK369000	Slide Pot.	A10KX2	二連スライドVR	MASTER VOLUME	03
		KA906550	Push Switch	KEC10901	プッシュスイッチ	~~13pcs~~	02
* *		NX005620	Circuit Board	PN2	PN2シート		
* *		VB941200	Diode	1SS133,1SS176	ダイオード		01
		VD180000	LED	SLZ-190B-03 RE	LED	42pcs	01
		VG778600	LED	SLZ290B03T2 GR	LED	6pcs	01
		KA906550	Push Switch	KEC10901	プッシュスイッチ	33pcs	02
*		VK793700	Push Switch	SKHFAA	プッシュスイッチ	TEMPO	03
		IF009320	LED Display	SL-1273	LEDディスプレイ	7seg×2	04
*		VK843400	LED Display	SL-1109	LEDディスプレイ	7seg×1	04
*		NX005640	Circuit Board	HP	HPシート		
		FZ004110	Semiconductive Cera. Cap.	0.1000 16V Z	半導体セラコン		01
		VB971100	Coil	FL5R200QN	コイル	20u	01
		LB101870	Phone Jack	YKB21-5006	ホーンジャック	HEADPHONES	03

＊：New Parts（新規部品） NR

ランク：Japan Only

	Ref. No.	Part No.	Description		部品名	Remarks	ランク
*		NX005660	Circuit Board	MIDI	ＭＩＤＩシート		
		VF968800	Coil	SBT-0260TF	コイル	60u	01
		VB312500	DIN Jack	5P YKF51-50	ＤＩＮジャック	MIDI/IN,OUT,THR	02
*		NX005630	Circuit Board	JACK	ＪＡＣＫシート		
		VB835000	Coil	FL5R200QNT	コイル	20u	01
		VD473700	Coil	SBT-0460T	コイル	60u	01
		VF456600	Coil	SBT-0180W	コイル	30u	03
		VI145300	Pin Jack	YKC21-0188	ピンジャック	AUX./L(L+R),R	01
		LB202330	Phone Jack	HLJ0521 Mono	ホーンジャック	OPTIONAL IN.L,R	02
		VF850800	Circuit Board	PDEAL	ペダルシート		05
		VC796500	Circuit Board	AE88L	ＡＥ８８Ｌシート		09
		VB941200	Diode	1SS133,1SS176	ダイオード		01
		VC796300	Circuit Board	AEC	ＡＥ　Ｃシート		10
		VB941200	Diode	1SS133,1SS176	ダイオード		01
		VC796600	Circuit Board	AE88H	ＡＥ８８Ｈシート		08
		VB941200	Diode	1SS133,1SS176	ダイオード		01
* *		VK560800	Circuit Board	PU60M	ＰＵ６０Ｍシート	J,X,M	20
* * *		VK560900	Circuit Board	PU60M	ＰＵ６０Ｍシート	U,C	20
		VK561000	Circuit Board	PU60M	ＰＵ６０Ｍシート	A,B,H	20
		XC719A00	IC	NJM7805FA	ＩＣ	REGULATOR +5V	02
		XD341A00	IC	NJM78M12FA	ＩＣ	REGULATOR +12V	03
		XD343A00	IC	NJM79M12FA	ＩＣ	REGULATOR -12V	03
		XC038A00	IC	STK4151V	ＩＣ	POWER AMP.	09
		XB247A00	IC	μPC4570HA	ＩＣ	OP AMP.	01
		IC1815M0	Transistor	2SC1815 Y,GR	トランジスタ		01
		VD959200	Transistor	2SC3616 L,K	トランジスタ		01
		VB493300	Diode Stack	1D2111	ダイオードスタック		01
		VB493200	Diode Stack	1D2C1	ダイオードスタック		01
		IH001090	Diode Stack	S4VB20	ダイオードスタック		04
		IH001790	Diode Stack	4D4B42	ダイオードスタック		04
		VB481900	Diode	11ES4	ダイオード		01
		UJ739680	Electrolytic Cap.	6800μF 16.0V	ケミコン		03
		UJ759470	Electrolytic Cap.	4700μF 35.0V	ケミコン		04
		FI384100	Ceramic Cap.	0.01μF 400V	規格認定コン		01
		FI383470	Ceramic Cap.	4700pF 400V	規格認定コン		01
		VD287800	Semiconductive Cera. Cap.	0.1μF 50V Z	半導体セラコン		01
		HW095100	Fuse Resistor	100Ω 1/4 J	ヒューズ抵抗		01
		VC755500	Metal Oxide Film Resistor	4.7Ω 2W J	酸化金属被膜抵抗		01
		VC751900	Metal Oxide Film Resistor	0.22Ω 2W J	酸化金属被膜抵抗		01
		VF790900	Coil	SU10V-D20010	コイル	10u	03
		VD293400	Coil	SU10V20010	コイル	10m	03
* *		VK881200	Relay	DC G5Z-2A	リレー	12V	04
* *		VK881300	Relay	DC DH12D2-OS(M)	リレー	12V	04
		KB000420	Fuse	T 2.50A 250V	ヒューズ	J,X,M	01
		KB000380	Fuse	T 4.00A 250V	ヒューズ	J,X,M	01
		KB002680	Fuse	T 2.50A 250V	ヒューズ	U,C	
		KB002640	Fuse	T 4.00A 250V	ヒューズ	U,C	
*		KB000264	Fuse	T 4.00A 250V	ヒューズ	U,C	
		KB000680	Fuse	T 1.25A 250V	ヒューズ	A,B,H	02
		KB000790	Fuse	T 4.00A 250V	ヒューズ	A,B,H	02
		LB201530	Fuse Holder	PC-FH1	ヒューズホルダ		01
*		NX005650	Circuit Board	PU-P	ＰＵ－Ｐシート		
		XB247A00	IC	μPC4570HA	ＩＣ	OP AMP	01
		XB419A00	IC	M5216L	ＩＣ	OP AMP	03
		XG203A00	IC	M5229P	ＩＣ	G. EQUALIZER	04
		IC1815M0	Transistor	2SC1815 Y,GR	トランジスタ		01
		VG805500	Transistor	2SC4391	トランジスタ		01
		VG805300	Transistor	2SA1674	トランジスタ		01
		VG805500	Transistor	2SC4391	トランジスタ		01
		VG805300	Transistor	2SA1674	トランジスタ		01
		VB481900	Diode	11ES4	ダイオード		01
		VH740700	Semiconductive Cera. Cap.	0.1μF 16V M	半導体セラコン		01
		KC001900	Relay	DC RY12W	リレー	12V	07
		VD173100	Push Switch	SDDLA1	プッシュスイッチ	POWER	03
*		XJ438A00	Speaker	5.0cm 16ohm 60W	スピーカ		
* *		XJ145A00	Speaker	13.0cm 8ohm 30W	スピーカ		09
*		VK857700	PK Cable		ＰＫ束線	DM-KEYBED	07
		VF921900	PK Cable		ＰＫケーブル	PEDAL	05

＊：New Parts (新規部品)　NR　　ランク：Japan Only

	Ref. No.	Part No.	Description		部品名	Remarks	ランク
		VD846400	AC Cord	7A 3.05m	電源コード	J	05
		MG001540	AC Cord	10A 3.05m	電源コード	U,C	06
		MG002070	AC Cord	3.05m	電源コード	A	06
		VH895700	AC Cord	6A 3.05m	電源コード	B	09
		VD846300	AC Cord	2.5A 3.05m	電源コード	H	05
		VE430800	AC Cord	3.5A 3.05m	電源コード	X	05
		MG002080	AC Cord	3.05m	電源コード	M	06
		XE994A00	Power Transformer		電源トランス	J,U,C	14
*		XE999B00	Power Transformer		電源トランス	A,X,M	14
*		XJ146A00	Power Transformer		電源トランス	B,H	15
		LB202280	Voltage Selector	HXW0131-01-910	電圧切替器	A,X,M	03

＊：New Parts (新規部品)　NR　　ランク：Japan Only

■OVERALL ASSEMBLY

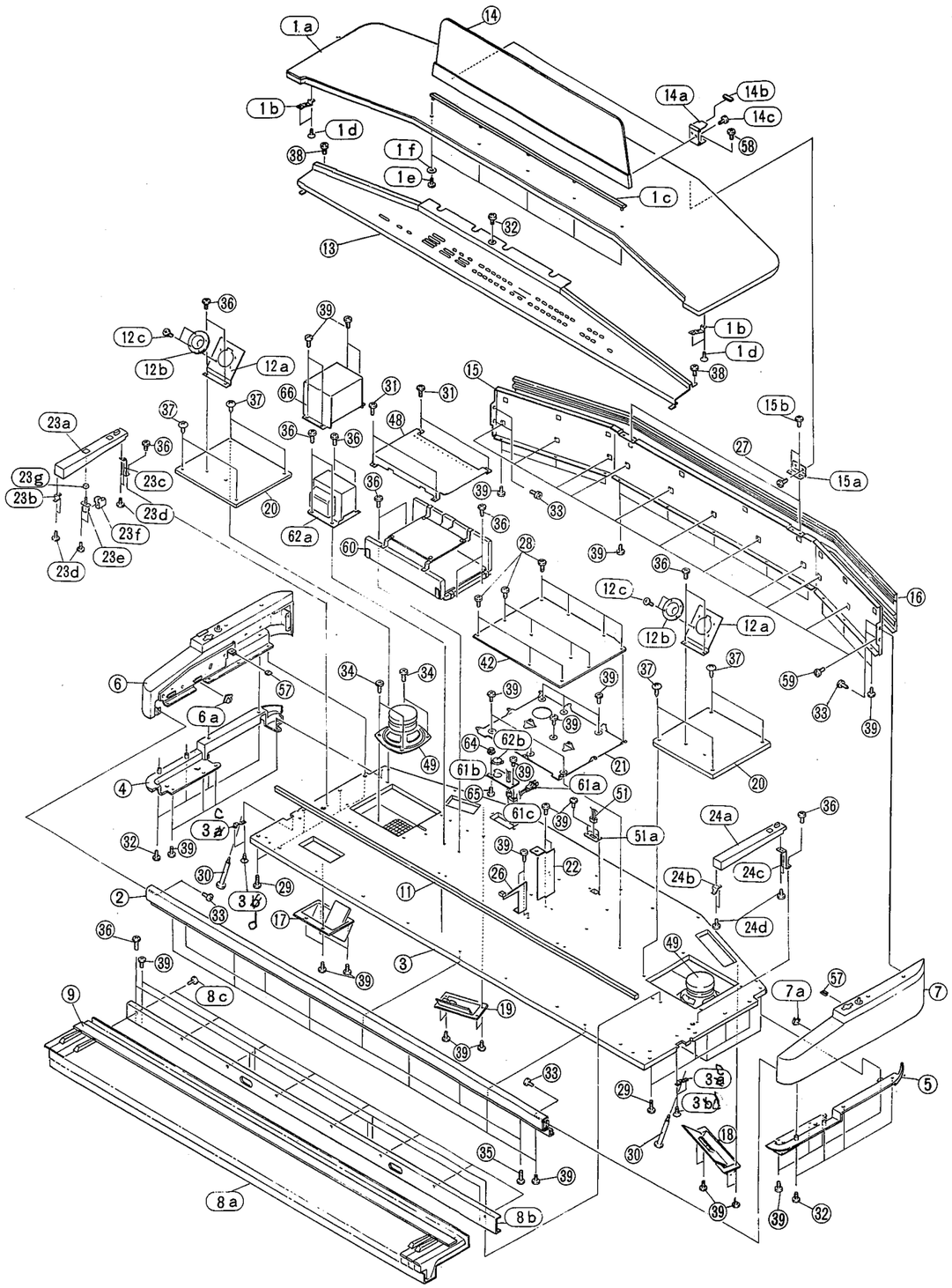

	Ref. No.	Part No.	Description		部品名	Remarks	ランク
*	1 a	VL159900	Top Board Assembly		屋根集成	CVP35	38
	1ab	VH662400	Support, Top Board	UPPER	屋根固定板 上	2pcs	02
*	1bc	VL244500	Rail, Music Stopper		譜面止レール		09
	1cd	EM030340	Flat Head Tapping Screw	3.5X14 ZMC2BL	＋皿ＴＰ１種	4pcs	01
	1de	VB658700	Bind Head Tapping Screw	3.0X14 ZMC2Y	＋バインドＰタイト	5pcs	01
	1ef	VK287600	Flat Washer	4.0X12X1 ZMC2Y	平座金みがき丸	5pcs	01
*	2	VL160900	Front Rail		口金		12
*	3	VL176700	Keybed		棚板集成		29
	3a	VD986100	Nut	B6.0X10.5 ZMC2Y	鬼目ナット	4pcs	01
	3b	ET200070	Nut	B4.0X9.5 ZMC2Y	鬼目ナット	27pcs	01
*	3c	VH662500	Support, Top Board	LOWER	屋根固定板 下	2pcs	01
	3d	VL254700	Flat Head Tapping Screw	3.5X8 ZMC2Y	＋皿ＴＰ１種	4pcs	
*	4	VL256000	Side Case	LEFT	サイドケース塗装品Ｌ		07
*	5	VL256100	Side Case	RIGHT	サイドケース塗装品Ｒ		07
*	6	VL173800	Outer Side Cap Assembly	LEFT	腕木Ａssy Ｌ		15
*	6a	VD185500	Rod Holder		ロッドホルダー	2pcs	01
*	7	VL173900	Outer Side Cap Assembly	RIGHT	腕木Ａssy Ｒ		15
*	7a	VD185500	Rod Holder		ロッドホルダー	2pcs	01
	8a	VC530600	Keyboard Assembly	A88 K6	ＡＥ鍵盤Ａssy		70
	8b	VD526300	Angle Bracket		反り止め金具Ａ８８		07
	8c	EP640490	Bind Head Tapping Screw-C	4.0X6 FCM3BL	＋バインドＣタイト	8pcs	01
	9	VD401700	Felt	1226X40X1 RE	フェルト８８		03
	11	VK020200	Cushion	88keys	クッション材		06
	12	--	Speaker Assembly		スピーカーＡssy		
*	12a	VL205100	Speaker Holder		スピーカー取付板	2pcs	04
*	12b	XJ438A00	Speaker	5.0cm 16ohm 60W	スピーカ	2pcs	
	12c	VL246000	Bind Head Tapping Screw-C	4.0X8 ZMC2BL	＋バインドＣタイト	8pcs	
	13	--	Control Panel Assembly		コンパネＡssy		
*	14	VL174000	Music Rest Assembly		譜面板Ａssy		18
	14a	VD255900	Hinge		譜面板蝶番	2pcs	05
	14b	CB054920	Cap	BL	キャップ	2pcs	01
	14c	VA819100	Bind Head Tapping Screw-P	3.0X6 ZMC2BL	＋バインドＰタイト	4pcs	01
*	15	VL277700	Back Cover Assembly		背面框Ａssy		13
	15a	VH662600	Hinge		蝶番	2pcs	03
	15b	ED040086	Bind Head Screw	4.0X8 ZMC2Y	＋バインド小ネジ	4pcs	01
*	16	VL277800	Back Cover Ornament		背面飾り印刷品		17
	17	--	HP Jack Unit		ＨＰＪユニット		
	18	--	D-Jack Assembly		Ｄ－ＪＡＣＫ Ａssy		
	19	--	A-Jack Assembly		Ａ－ＪＡＣＫ Ａssy		
*	20	VL183100	Speaker Cover Assembly		蓋Ａssy		07
*	21	VK753100	Holder, DM P.C.B.		ＤＭシート固定金具		06
*	22	VL171600	Control Panel Holder		コンパネ取付金具	3pcs	04
	23	--	End Block Assembly	LEFT	拍子木Ａssy Ｌ		
	23a	VL256600	End Block	LEFT	拍子木塗装品 Ｌ		06
*	23b	VL732000	Angle Bracket Assembly	FRONT	拍子木固定金具Ａssy		
	23c	VL256900	Angle Bracket	REAR	拍子木固定金具 Ｒ		03
	23d	EP600280	Bind Head Tapping Screw-P	3.0X8 ZMC2Y	＋バインドＰタイト	6pcs	01
	23e	VD173100	Push Switch	SDDLA1	プッシュスイッチ	POWER	03
	23f	CB049980	Switch Cover	BL	パワースイッチカバー		01
	23g	VF663400	Knob	BL	プッシュツマミ		01
	24	--	End Block Assembly	RIGHT	拍子木Ａssy Ｒ		
*	24a	VL256700	End Block	RIGHT	拍子木塗装品 Ｒ		06
*	24b	VL732000	Angle Bracket Assembly	FRONT	拍子木固定金具Ａssy		
*	24c	VL263500	Angle Bracket	REAR	拍子木固定金具 Ｒ		03
	24d	EP600280	Bind Head Tapping Screw-P	3.0X8 ZMC2Y	＋バインドＰタイト	4pcs	01
*	26	VL473600	Control Panel Holder		コンパネ受金具Ａssy	3pcs	
*	27	EP030250	Bind Head Tapping Screw-1	3.5X14 ZMC2BL	＋バインドＴＰ１種	4pcs	
	28	EP630230	Bind Head Tapping Screw-C	3.0X8 ZMC2BL	＋バインドＣタイト	11pcs	01
*	29	VD703900	Bind Head Tapping Screw-S	4.0X20 FCM3BL	＋バインド Ｓタイト	8pcs	
	30	VD134200	Screw		段付ネジ	2pcs	02
	31	VL047300	Bind Head Tapping Screw-2	4.0X8 ZMC2Y	＋バインドＴＰ２種	4pcs	
	32	VB268100	Bind Head Tapping Screw-C	3.0X8 ZMC2Y	＋バインドＣタイト	9pcs	01
	33	VI693100	Bind Head Tapping Screw-S	4.0X8 ZMC2BL	＋バインドＳタイト	8pcs	01
	34	VK348200	Cup Screw	4.0X18 ZMC2Y	カップスクリュー		01
	35	VB857600	Bind Head Screw	5.0X20 ZMC2BL	＋バインド小ネジ	5pcs	01
	36	EG340210	Bind Head Screw	4.0X14 ZMC2Y	＋バインド小ネジ	22pcs	01
*	37	VL445800	Truss Head Screw	4.0X20 ZMC2Y	＋トラス小ネジ	8pcs	
*	38	VF627200	Bind Head Tapping Screw-S	4.0X10 ZMC2BL	＋バインドＳタイト	2pcs	
	39	EP030340	Bind Head Tapping Screw-1	3.5X12 ZMC2BL	＋バインドＴＰ１種	67/8/4pcs	01
*	42	VK554500	Circuit Board	DM	ＤＭシート		59
*	48	VK895600	Shield Cover		シールドカバーＰＵ		
*	49	XJ145A00	Speaker	13.0cm 8ohm 30W	スピーカ	2pcs	09
*	51	VK857700	PK Cable		ＰＫ束線		07
	51a	VF914000	Connector Panel		コネクターパネル		02
	57	VD255800	Nut	U USN-4001	スピードナット	2pcs	01
*	58	EP030310	Bind Head Tapping Screw-1	3.0X16 ZMC2BL	＋バインドＴＰ１種	4pcs	
*	59	VL454000	Cup Screw-S	3.0X5 ZMC2Y	カップＳタイト	11pcs	
*	60	VK561700	Power Amplifier	PU60	ＰＵ６０Ａｓｓｙ	J,X,M	
*	60	VK561800	Power Amplifier	PU60	ＰＵ６０Ａｓｓｙ	U,C	

＊：New Parts (新規部品)　NR

ランク：Japan Only

	Ref. No.	Part No.	Description		部品名	Remarks	ランク
*	60	VK561900	Power Amplifier	PU60	ＰＵ６０Ａｓｓｙ	A,B,H	
	61a	VD846400	AC Cord	7A 3.05m	電源コード	J	05
	61a	MG001540	AC Cord	10A 3.05m	電源コード	U,C	06
	61a	MG002070	AC Cord	3.05m	電源コード	A	06
	61a	VH895700	AC Cord	6A 3.05m	電源コード	B	09
	61a	VD846300	AC Cord	2.5A 3.05m	電源コード	H	05
	61a	VE430800	AC Cord	3.5A 3.05m	電源コード	X	05
	61a	MG002080	AC Cord	3.05m	電源コード	M	06
*	61b	VL237300	Cord Holder		コード取付板	J,U,C,B,H	03
*	61b	VL237400	Cord Holder		コード取付板	A,X,M	05
	61c	CB032840	Cord Strain Relief	SR-5N-4	コードストッパー	J,U,C,X,M	01
	61c	CB072750	Cord Strain Relief	SR-4N-4	コードストッパー	A,B,H	01
	62	XE994A00	Power Transformer		電源トランス	J,U,C	14
	62	XE999B00	Power Transformer		電源トランス	A,X,M	14
*	62	XJ146A00	Power Transformer		電源トランス	B,H	15
	62a	LB202280	Voltage Selector	HXW0131-01-910	電圧切替器	A,X,M	03
	64	VA211900	Hexagonal Nut	3.0 ZMC2Y	フランジ付六角ナット	A,X,M 2pcs	01
	65	EG330380	Bind Head Screw	3.0X10 ZMC2BL	＋バインド小ネジ	A,X,M 2pcs	01
*	66	VL381100	Cover, P.T.		トランスカバー	U	
	67	--	GND Plate		アース金具	U,C,H	
			<ACCESSORIES>		＜付属品＞		
*		VL236300	Voice List		ボイスリストシート		
		--	Bench	BC-8	椅子	U,C,B	
		--	Top Cover		トップカバー		

＊：New Parts (新規部品)　NR

ランク：Japan Only

■STAND ASSEMBLY

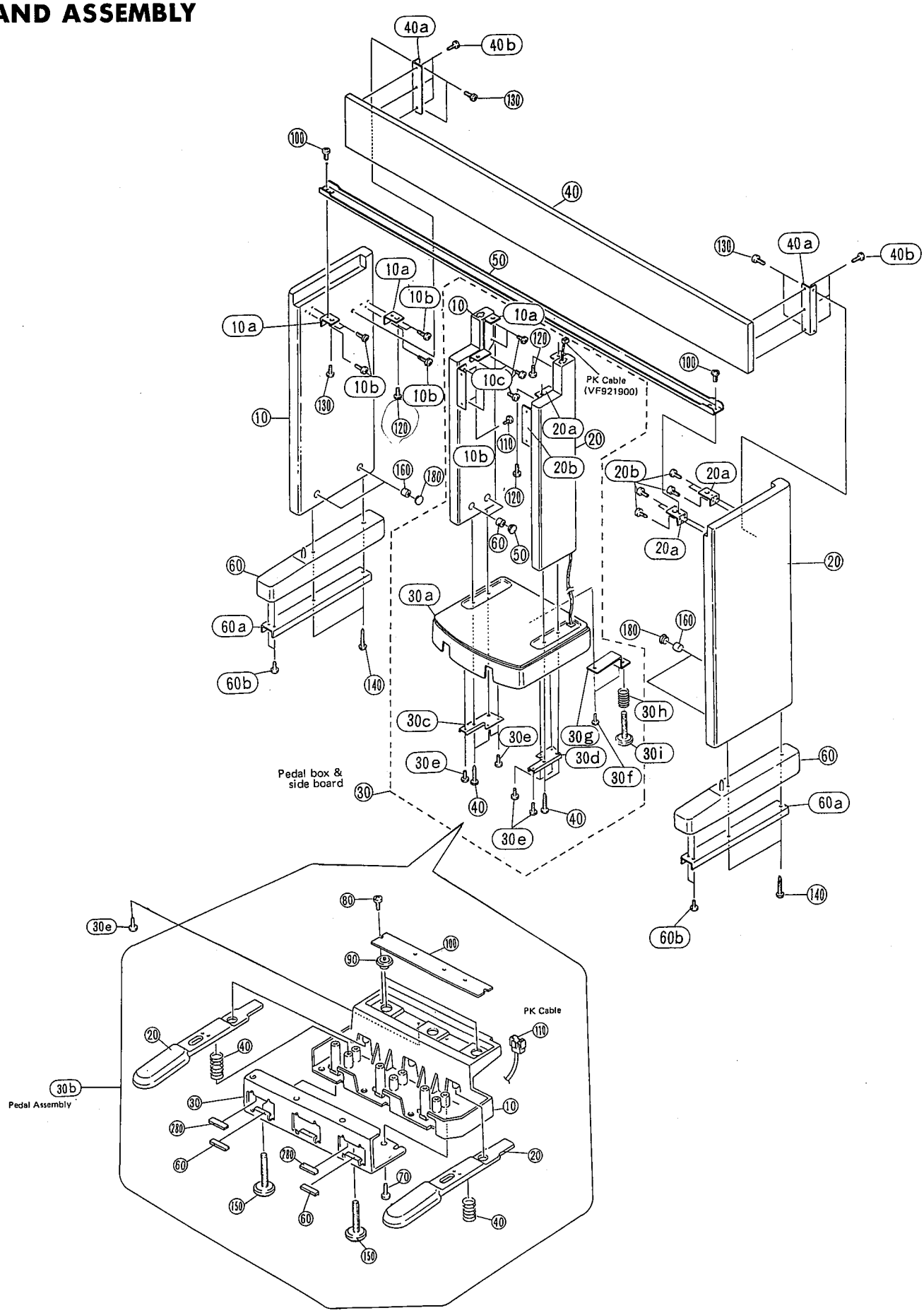

	Ref. No.	Part No.	Description		部品名	Remarks	ランク
	--		Stand Assembly		スタンドAssy	CVP35	
*	10	VL159400	Side Board Assembly	LEFT	側板Assy L		17
	10a	VA880600	Angle Bracket		アングル	2pcs	02
	10b	EP030580	Bind Head Tapping Screw-1	3.5X20 ZMC2BL	+バインドTP1種	6pcs	01
*	20	VL159500	Side Board Assembly	RIGHT	側板Assy R		17
	20a	VA880600	Angle Bracket		アングル	2pcs	02
	20b	EP030580	Bind Head Tapping Screw-1	3.5X20 ZMC2BL	+バインドTP1種	6pcs	01
	30	--	Pedal Box & Side Board		ﾍﾟﾀﾞﾙ側板ﾎﾞｯｸｽAssy		
*	40	VL162300	Back Board Assembly	S	背面框S Assy		12
*	40a	VL171700	Angle Bracket		背面框固定金具	2pcs	04
	40b	EP040250	Bind Head Tapping Screw-1	4.0X16 ZMC2BL	+バインドTP1種	6pcs	01
	50	VG692800	Angle Bracket U		U金具		06
	60	VF945800	Stand Base Assembly		妻土台Assy	2pcs	06
	60a	VA881100	Angle Bracket		妻土台金具	2pcs	03
	60b	EP640500	Bind Head Tapping Screw-P	4.0X10 ZMC2Y	+バインドPタイト	4pcs	01
*	70	VL175700	Screw Set		ネジセットAssy		06
		--	Pedal Box & Side Board		ﾍﾟﾀﾞﾙ側板ﾎﾞｯｸｽAssy		
*	10	VL160300	Side Board Ass'y, Pedal	LEFT	ペダル側板Assy		12
*	10a	VL253700	Angle Bracket	LEFT	ペダル側板取付金具L		05
	10b	VG567700	Angle Bracket	LOWER	ペダル側板取付金具下		03
	10c	EP030580	Bind Head Tapping Screw-1	3.5X20 ZMC2BL	+バインドTP1種	6pcs	01
*	20	VL160500	Side Board Ass'y, Pedal	RIGHT	ペダル側板Assy		12
*	20a	VL253800	Angle Bracket	RIGHT	ペダル側板取付金具R		05
	20b	VG567700	Angle Bracket	LOWER	ペダル側板取付金具下		03
	20c	EP030580	Bind Head Tapping Screw-1	3.5X20 ZMC2BL	+バインドTP1種	6pcs	01
	30	--	Pedal Box Assembly		ペダルボックスAssy		
*	30a	VK753400	Pedal Box		ペダルBOX		09
*	30b	VL713600	Pedal Assembly		ペダルAssy		
*	30c	VK838000	Angle Bracket, Pedal Box	LEFT	ペダルBOX金具 L		04
	30d	VK902000	Angle Bracket, Pedal Box	RIGHT	ペダルBOX金具 R		03
	30e	EP640110	Bind Head Tapping Screw-P	4.0X12 ZMC2Y	+バインドPタイト	11pcs	01
	30f	EP640110	Bind Head Tapping Screw-P	4.0X12 ZMC2Y	+バインドPタイト	2pcs U	01
*	30g	VL791600	Support, Pedal		ペダルサポート	U	
*	30h	VL830300	Pedal Spring		ペダルバネ	U	
	30i	VF851300	Adjuster		丸形アジャスター	U	01
	40	VG024100	Pan Head Screw	6.0X45 ZMC2Y	+ナベ尖り先小ネジ	4pcs	01
	50	VJ009300	Cap		キャップ	4pcs	01
	60	ET400070	Joint Connector	6.0X13 ZMC2BL	ジョイントコネクター	4pcs	01
*		VL713600	Pedal Assembly		ペダルAssy		
	10	VG020900	Pedal Frame	BL	ペダルフレーム		05
	20	VF657600	Pedal		ペダル本体	2pcs	06
	30	VF657700	Angle Bracket, Pedal		ペダル支持金具		04
	40	VF658100	Pedal Spring		ペダルバネ	2pcs	01
	60	--	Felt	36X10X2	フェルト	2pcs	
	70	VD260600	Bind Head Tapping Screw-P	5.0X25 ZMC2BL	+バインドPタイト	3pcs	01
	80	VD964600	BW Head tapping Screw-P	3.0X10 ZMC2Y	+BWHPタイト	4pcs	01
	90	VF815100	Rubber Contact		接点ゴム	2pcs	01
	100	VF850800	Circuit Board	PDEAL	ペダルシート集成		05
	110	VF921900	PK Cable		PKケーブル		05
	110a	VD947800	Data Line Filter	ESD-R-25D-B	データラインフィルタ		05
	150	VF851300	Adjuster	6X45	丸形アジャスター	2pcs	01
	180	VH661100	Felt	36X10X2.5	フェルト	2pcs	02
*		VL175700	Screw Set		ネジセットAssy		06
	100	EG340340	Bind Head Screw	4.0X6 ZMC2BL	+バインド小ネジ	2pcs	01
	110	VB132700	Bind Head Screw	4.0X12 ZMC2BL	+バインド小ネジ	4pcs	01
	120	VF682700	Bind Head Screw	6.0X14 ZMC2BL	+バインド小ネジ	6pcs	01
	130	VB131900	Bind Head Screw	6.0X25 ZMC2BL	+バインド小ネジ	6pcs	01
	140	VD180600	Pan Head Screw	6.0X70 ZMC2Y	+ナベ小ネジ	4pcs	01
	160	ET400070	Joint Connector	6.0X13 ZMC2BL	ジョイントコネクター	4pcs	01
	180	VJ009300	Cap		キャップ	4pcs	01

＊：New Parts（新規部品） NR

ランク：Japan Only

■CONTROL PANEL ASSEMBLY

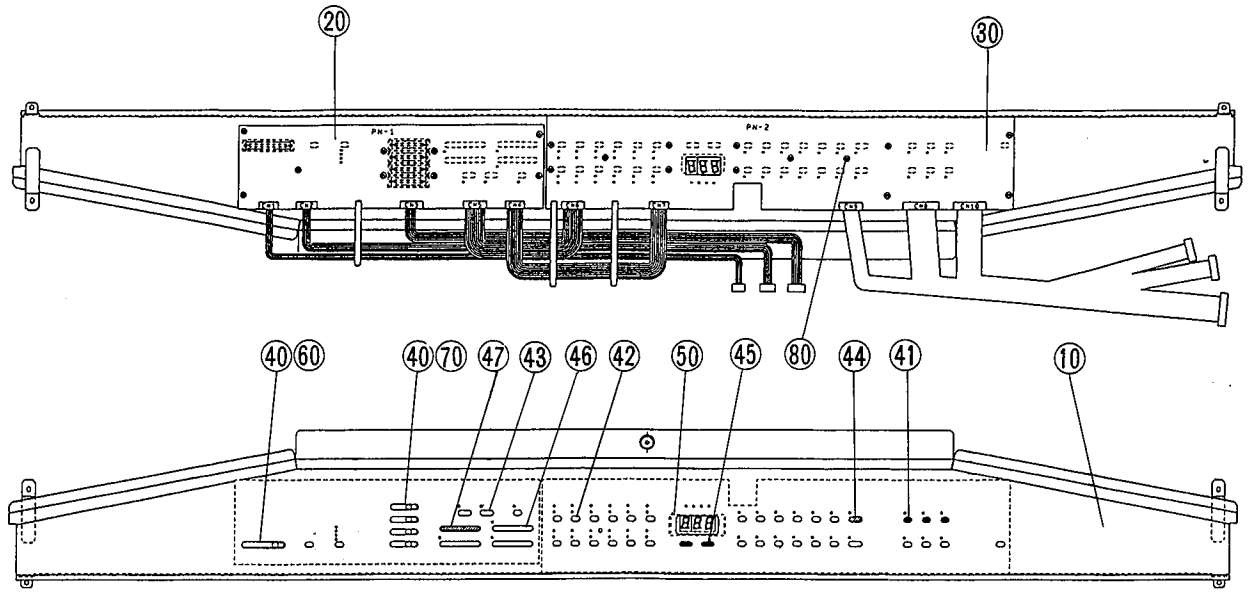

	No. Ref.	Part No.	Description		部品名	Remarks	ランク
		--	Control Panel Assembly		コンパネAssy	CVP35	
*	10	VL173500	Control Panel		コントロールパネル		18
*	20	NX005610	Circuit Board	PN1	PN1シート		
*	30	NX005620	Circuit Board	PN2	PN2シート		
	40	CB059250	Knob	BL-YE	ツマミ	5pcs	01
	41	VA064600	Knob	RE	ツマミ	3pcs	01
	42	CB059240	Knob	BL	ツマミ	31pcs	01
*	43	VK792200	Knob	MS	ツマミ	3pcs	02
* *	44	VK897000	Knob	MS GY	ツマミ	1pc	02
*	45	VK792100	Knob	W	ツマミ	2pcs	02
	46	CB059230	Knob	L	ツマミ	3pcs	01
*	47	VK897500	Knob	L GY	ツマミ	1pcs	02
* *	50	VK753900	LED Filter		数字表示窓		03
*	60	VK323500	Escutcheon Assembly		エスカッションAssy	1pc.	
	60a	VD135000	Escutcheon	BL	エスカッション		01
	60b	VD214900	Spacer		防振スペーサー S		01
	60c	CA016330	Dust Proof Cloth		防塵クロス		01
*	70	VK896800	Escutcheon Assembly	15mm	エスカッションAssy	4pcs	
	70a	VJ334400	Escutcheon	BL	エスカッション		01
	70b	VD214900	Spacer		防振スペーサー S		01
	70c	VJ439300	Dust Proof Cloth		防塵クロス		01
	80	EP630390	Bind Head Tapping Screw-C	3.0X6 ZMC2Y	+バインドCタイト	25pcs	01

＊：New Parts（新規部品） NR

ランク：Japan Only

■JACK ASSEMBLY

●HP Jack Unit

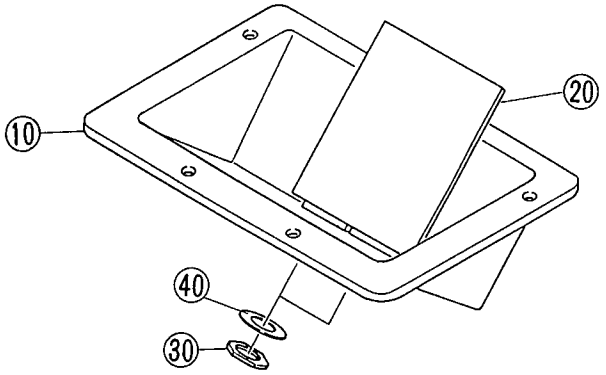

●D-Jack Assembly

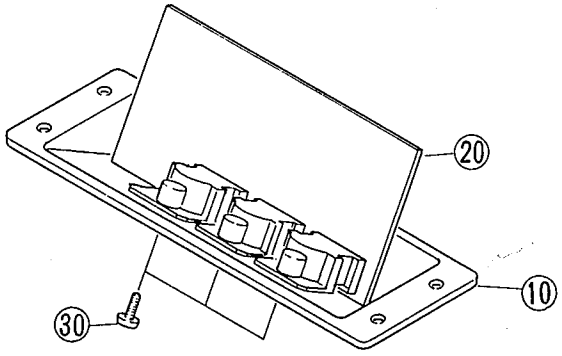

●A-Jack Assembly

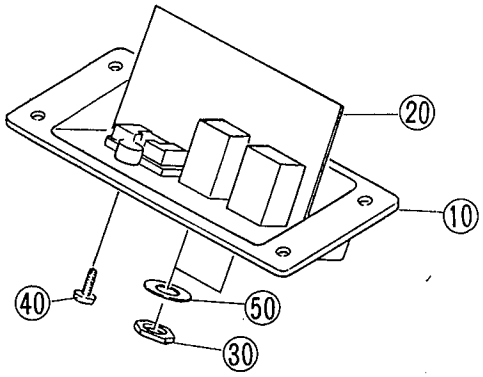

	Ref. No.	Part No.	Description		部品名	Remarks	ランク
		--	HP Jack Unit		HPJユニット	CVP35	
*	10	VL230200	HP Jack Cover		HPJカバー印刷品		06
*	20	NX005640	Circuit Board	HP	HPシート		
	30	ET400040	Nut	12X14X2 FCM3BL	管用ナット	2pcs	01
	40	VJ869400	Washer	BL	ワッシャー	2pcs	02
		--	D-Jack Assembly		D-JACK Assy		
*	10	VL230400	D-Jack Cover		Dジャックカバー印刷		06
*	20	NX005660	Circuit Board	MIDI	MIDIシート		
	30	EP630660	Bind Head Tapping Screw-P	3.0X10 ZMC2BL	+バインドPタイト	3pcs	01
		--	A-Jack Assembly		A-JACK Assy		
*	10	VL230300	A-Jack Cover		Aジャックカバー印刷		06
*	20	NX005630	Circuit Board	JACK	JACKシート		
	30	ET400040	Nut	12X14X2 FCM3BL	管用ナット	2pcs	01
	40	EP630660	Bind Head Tapping Screw-P	3.0X10 ZMC2BL	+バインドPタイト	1pc	01
	50	VJ869400	Washer	BL	ワッシャー	2pcs	02

＊：New Parts（新規部品） NR

ランク：Japan Only

■POWER AMPLIFIER

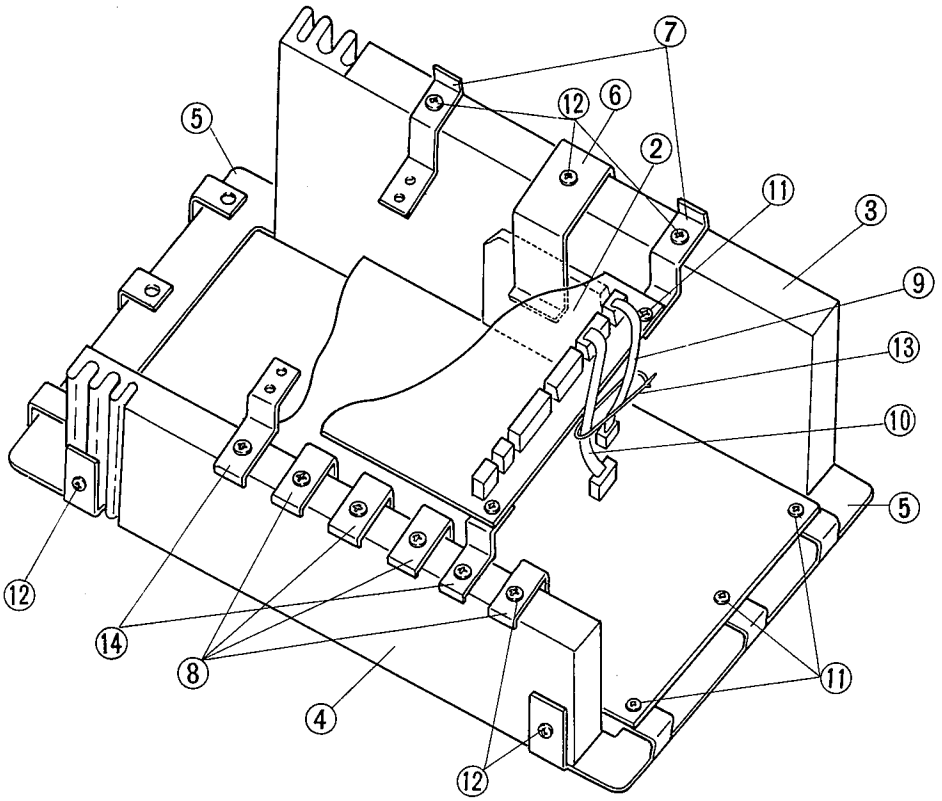

●Transistor holders installation

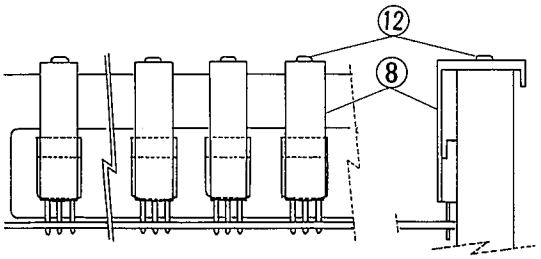

●IC12 installation

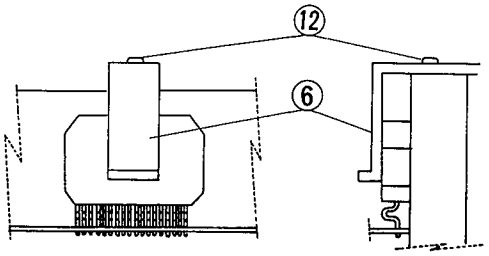

	Ref. No.	Part No.	Description		部品名	Remarks	ランク
*		VK561700	Power Amplifier	PU60	PU60Assy	J,X,M (CVP35)	
*		VK561800	Power Amplifier	PU60	PU60Assy	U,C	
*		VK561900	Power Amplifier	PU60	PU60Assy	A,B,H	
*	1	VK560800	Circuit Board	PU60M	PU60Mシート	J,X,M	20
*	1	VK560900	Circuit Board	PU60M	PU60Mシート	U,C	20
*	1	VK561000	Circuit Board	PU60M	PU60Mシート	A,B,H	20
*	2	NX005650	Circuit Board	PU-P	PU-Pシート		
	3	--	Heat Sink	L=80	放熱板 P		
	4	--	Heat sink	L=50	放熱板 P		
	5	--	Frame	60	電源フレーム	2pcs	
	6	--	Holder, Transistor	A	トランジスターホルダ	1pc	
	7	--	Holder	A	Pシート取付金具	4pcs	
	8	--	Holder, Transistor	B	トランジスターホルダ	2pcs	
	11	EP630390	Bind Head Tapping Screw-C	3.0X6 ZMC2Y	+バインドCタイト	10pcs	01
	12	VL047300	Bind Head Tapping Screw-2	4.0X8 ZMC2Y	+バインドTP2種	13pcs	
	13	CB069250	Cord Clamper	BK-1	束線止め		01
	14	--	Holder	B	Pシート取付金具	2pcs	

＊：New Parts (新規部品)　NR　　ランク：Japan Only

■KEYBOARD ASSEMBLY

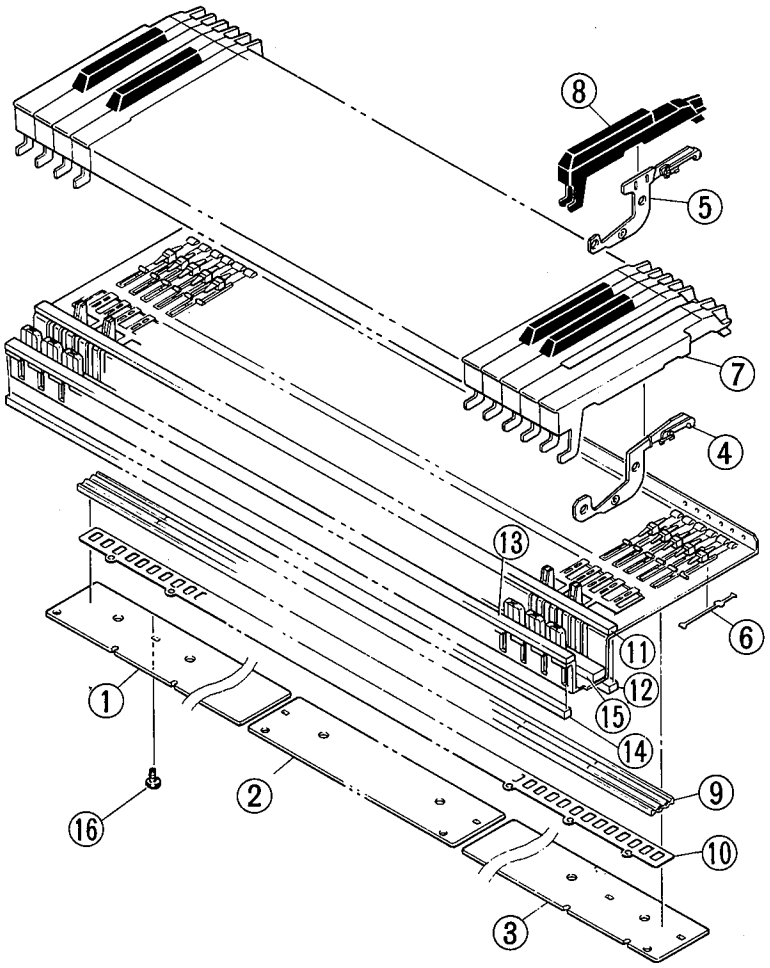

Ref. No.	Part No.	Description		部品名	Remarks	ランク
*	VC530601	Keyboard Assembly	A88 K6	AE鍵盤Assy	CVP35	57
1	VC796500	Circuit Board	AE88L	AE88Lシート		09
2	VC796300	Circuit Board	AEC	AE Cシート		10
3	VC796600	Circuit Board	AE88H	AE88Hシート		08
4	VD317300	Hammer Assembly	White key	ハンマー白鍵Assy	52pcs	04
5	VD317900	Hammer Assembly	Black key	ハンマー黒鍵Assy	36pcs	04
6	VC795100	Key Spring	AE MK	鍵バネ	88pcs	01
7	VC507100	White Key	C	白鍵C	7pcs	03
7	VC507200	White Key	D	白鍵D	7pcs	03
7	VC507300	White Key	E	白鍵E	7pcs	03
7	VC507400	White Key	F	白鍵F	7pcs	03
7	VC507500	White Key	G	白鍵G	7pcs	03
7	VC507600	White Key	A	白鍵A	7pcs	03
7	VC507700	White Key	B	白鍵B	8pcs	03
7	VC507800	White Key	C'	白鍵C'	1pc	03
7	VC508100	White Key	A'	白鍵A'	1pc	03
8	VC508300	Black Key		黒鍵	36pcs	02
9	~~VC799200~~	Rubber Contact	AE88 VS5K 9800	可動導電ゴム S/N 1216 (94.5.11)		08
10	VC799300	Insulation Spacer	AE88	絶縁スペーサ		03
11	VC984900	Felt		フェルト		04
12	VI437200	Cushion		クッション		05
13	VC985100	Felt		フェルト		03
14	VC985200	Felt		フェルト		03
15	VC985300	Felt		フェルト		05
16	EP600270	Bind Head Tapping Screw-P	3.0X10 ZMC2Y	+バインドPタイト	15pcs	01
16	EP630660	Bind Head Tapping Screw-P	3.0X10 ZMC2BL	+バインドPタイト	15pcs	01

＊：New Parts (新規部品)　NR　　ランク：Japan Only

■BENCH BC-8

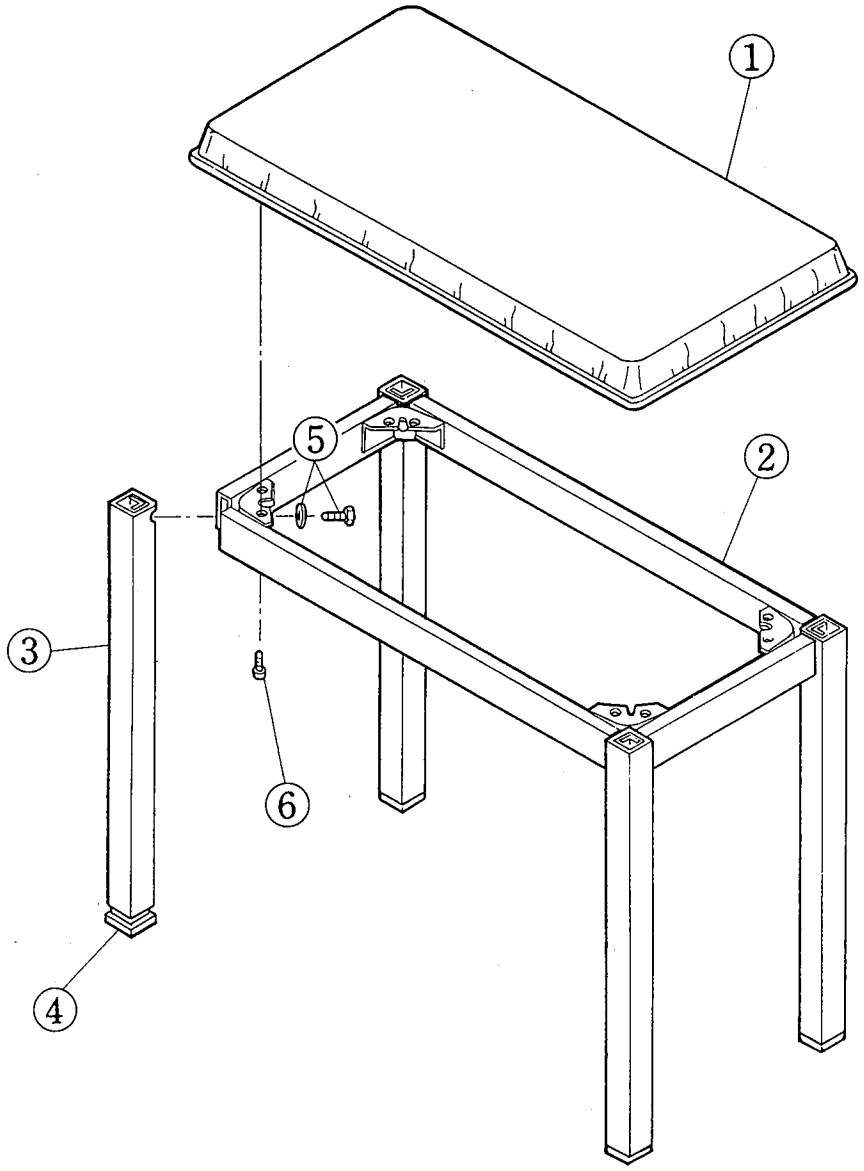

Ref. No.	Part No.	Description		部品名	Remarks	ランク
		<BENCH>	BC-8	<椅子>	CVP35	
1	NX004160	Bench Board Assembly		座板Ass'y	J,U	
1	NX004170	Bench Board Assembly		座板Ass'y	C,X	
1	--	Bench Board Assembly		座板Ass'y	B	
2	AX000350	Bench Frame Assembly		座枠Ass'y		
3	AX000360	Leg Pipe Assembly		脚パイプAss'y	4pcs	
4	CX003630	Leg Cap		脚キャップ	4pcs	
5	EX000450	Hexagonal Nut & SP Washer	5.0X12	バネ座付六角ナット	4pcs	
6	EJ350206	Pan Head Tapping Screw	5.0X20 FCM3BL	ナベタッピングネジ	4pcs	

＊：New Parts (新規部品)　NR　　ランク：Japan Only

■CVP-35 OVERALL CIRCUIT DIAGRAM

1447

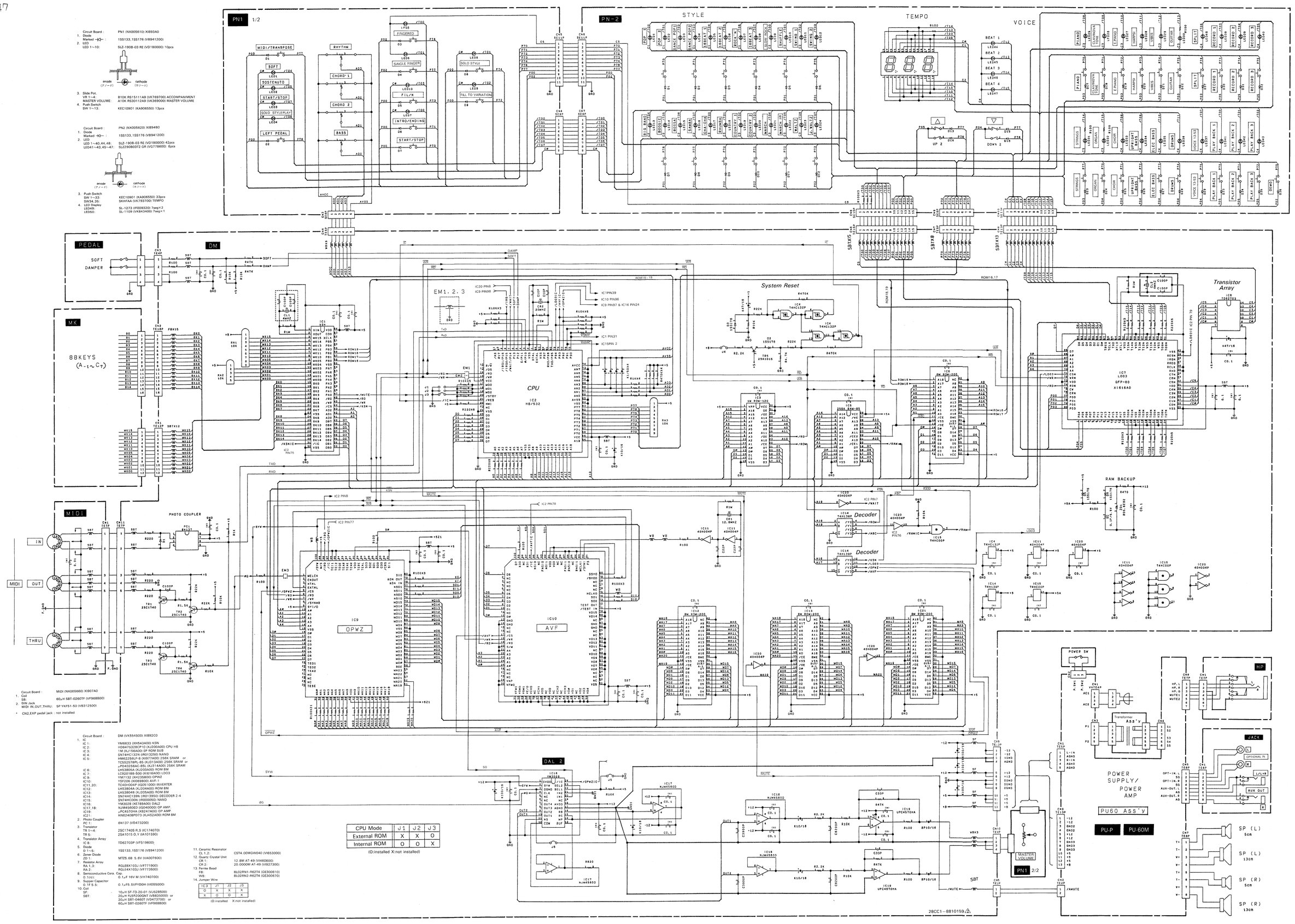

Circuit Board : PN1 (NX005610) XI893A0
1. Diode
Marked ⊣⊢ : 1SS133, 1SS176 (VB941200)
2. LED
LED 1~10: SLZ-190B-03 RE (VD180000) 10pcs

3. Slide Pot.
VR 1~4: B10K RS15111A9 (VK769700) ACCOMPANIMENT
MASTER VOLUME: A10K RS30112A9 (VK369000) MASTER VOLUME
4. Push Switch
SW 1~13: KEC10901 (KA906550) 13pcs

Circuit Board : PN2 (NX005620) XI894B0
1. Diode
Marked ⊣⊢ : 1SS133, 1SS176 (VB941200)
2. LED
LED 1~40,44,48: SLZ-190B-03 RE (VD180000) 42pcs
LED41~43,45~47: SLZ290B03T2 GR (VG778600) 6pcs

3. Push Switch
SW 1~33: KEC10901 (KA906550) 33pcs
SW34,35: SKHFAA (VK793700) TEMPO
4. LED Display
LED49: SL-1273 (IF009320) 7seg×2
LED50: SL-1109 (VK843400) 7seg×1

Circuit Board : MIDI (NX005660) XI907A0
1. Coil
SB: 60μH SBT-0260TF (VF968800)
2. DIN Jack
MIDI IN, OUT, THRU: SP YKF51-50 (VB312500)
* CN2, EXP pedal jack : not installed

Circuit Board : DM (VK554500) XI892C0
1. IC
IC 1: YM6633 (XH543A00) KSN
IC 2: HD6475328CP10 (XJ200A00) CPU H8
IC 3: 1M (XJ156A00) EP ROM SUB
IC 4: SN74HC132N (IR013250) NAND
IC 5: HM62256LP-8 (XI977A00) 256K SRAM or TC552578PL-85 (XJ313A00) 256K SRAM or μPD43256AC-85L (XJ314A00) 256K SRAM
IC 6: LH53805A (XJ203A00) ROM 8M
IC 7: LC92018B-500 (XI616A00) LDO3
IC 9: YM7132 (XH235B00) OPWZ
IC10: YSF206 (XI069B00) AVF-1
IC11,20: TC40H004P (IG051000) INVERTER
IC12: LH53804A (XJ204A00) ROM 8M
IC13: LH53804B (XJ205A00) ROM 8M
IC14: SN74HC139N (IR013950) DECODER 2-4
IC15: SN74HC00N (IR000050) NAND
IC16: YM3028 (XE789A00) DAL2
IC17,18: NJM4560ED (IG040000) OP AMP.
IC19: μPC4570HA (XB247A00) OP AMP.
IC21: HN62408PD73 (XJ452A00) ROM 8M
2. Photo Coupler
PC 1: 6N137 (VD473200)
3. Transistor
TR 1~4: 2SC1740S R,S (IC174070)
TR 5: 2SA1015 O,Y (IA101590)
4. Transistor Array
IC 8: TD62703P (VF519600)
5. Diode
D 1~5: 1SS133, 1SS176 (VB941200)
6. Zener Diode
ZD 1: MTZ5.6B 5.6V (VA007600)
7. Resistor Array
RA 1,3: RGL8X103J (VF771900)
RA 2: RGL6X103J (VF773500)
8. Semiconductive Cera. Cap.
0.1(e): 0.1μF 16V M (VH740700)
9. Supper Capacitor
0.1F 5.5: 0.1μF5.5VFYD0H (VI055000)
10. Coil
SF: 10μH SF-T3-20-01 (VJ528500)
SBT: 20μH FL5R200QNT (VB835000) or 20μH SBT-0460T (VD473700) or 60μH SBT-0260TF (VF968800)
11. Ceramic Resonator
CL 1,2: CST4.00MGW040 (VI653000)
12. Quartz Crystal Unit
CR 1: 12.8M AT-49 (VI460600)
CR 2: 20.0000M AT-49 (VI927300)
13. Ferrite Bead
FB: BL02RN1-R62T4 (GE300610)
WB: BL02RN2-R62T4 (GE300670)
14. Jumper Wire

IC 3	J1	J2	J3
O	X	X	X
X	O	O	X

(O:installed X:not installed)

CPU Mode	J1	J2	J3
External ROM	X	X	O
Internal ROM	O	O	X

(O:installed X:not installed)

■CVP-35 OVERALL CIRCUIT DIAGRAM

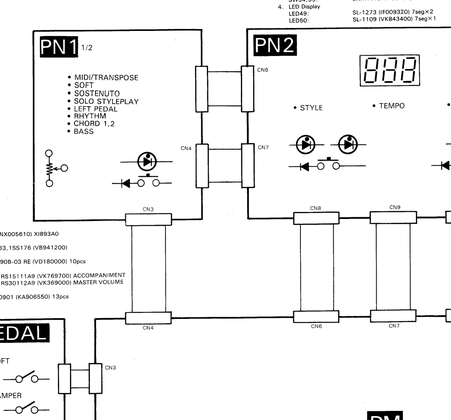

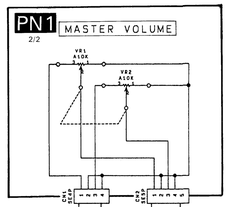

Circuit Board : PN1 (NX005610) XI893A0
1. Diode
Marked :⊣◎⊢ : 1SS133,1SS176 (VB941200)
2. LED
LED 1~10: SLZ-190B-03 RE (VD180000) 10pcs
3. Slide Pot.
VR 1~4: B10K RS15111A9 (VK769700) ACCOMPANIMENT
MASTER VOLUME: A10K RS30112A9 (VK369000) MASTER VOLUME
4. Push Switch
SW 1~13: KEC10901 (KA906550) 13pcs

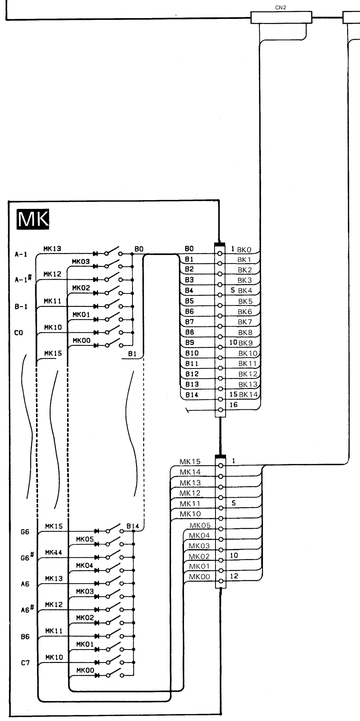

Circuit Board : DM (VK554500) XI892C0
1. IC
IC 1 : YM6633 (XH543A00) KSN
IC 2 : HD6475328CP19 (XJ200A00) CPU H8
IC 3 : 1M (XJ156A00) EF ROM SUB
IC 4 : SN74HC132N (IR013250) NAND
IC 5 : HM62256LP-8 (V0977A00) 256K SRAM or
TC55257BPL-85 (XJ313A00) 256K SRAM or
μPD43256AC-85L (XJ314A00) 256K SRAM
IC 6 : LH53B0SA (XJ203A00) ROM BM
IC 7 : LC35216B-500 (X0616A00) LDO3
IC 9 : YM7132 (XH235B00) GPWZ
IC10 : YSF226 (X0698900) AVF-1
IC11,20 : TC40H004F (IG051000) INVERTER
IC12 : LH53B04A (XJ204A00) ROM BM
IC13 : LH53B04B (XJ205A00) ROM BM
IC14 : SN74HC139N (IR013950) DECODER 2-4
IC15 : SN74HC00N (IR000050) NAND
IC16 : YM3028 (XE789A00) DAL2
IC17,18 : NJM4560ID (IG040000) OP AMP.
IC19 : μPC4570HA (XB247A00) OP AMP.
IC21 : HN62408PD73 (XJ452A00) ROM BM
2. Photo Coupler
PC 1 : 6N137 (VD473200)
3. Transistor
TR 1~4 : 2SC1740S R,S (IC174070)
TR 5 : 2SA1015 O,Y (IA101590)
4. Translator Array
IC 8 : TD62703P (VF519600)
5. Diode
D 1~5 : 1SS133,1SS176 (VB941200)
6. Zener Diode
ZD 1 : MTZ5.6B 5.6V (VA007600)
7. Resistor Array
RA 1,3 : RGLE8X103J (VF771900)
RA 2 : RGLE4X103J (VF773500)
8. Semiconductive Cera. Cap.
0.1(≡) : 0.1μF 16V M (VH740700)
9. Supper Capacitor
0.1F S.5 : 0.1μF5.5VFYD0H (VI055000)
10. Coil
SF : 10μH SF-T9-20-01 (VJ528500)
SBT : 20μH FL5R2000NT (VB835000) or
20μH SBT-0460T (VD473700) or
60μH SBT-0260TF (VF968800)
11. Ceramic Resonator
CL 1,2 : CST4.00MGW040 (VI653000)
12. Quartz Crystal Unit
CR 1 : 12.8M AT-49 (V1460600)
CR 2 : 20.0000M AT-49 (VI927300)
13. Ferrite Bead
FB : BL02RN1-R62T4 (GE300610)
WB : BL02RN2-R62T4 (GE300670)
14. Jumper Wire

I/C 3	J1	J2	J3
O	X	X	X
X	O	O	X

(O:installed X:not installed)

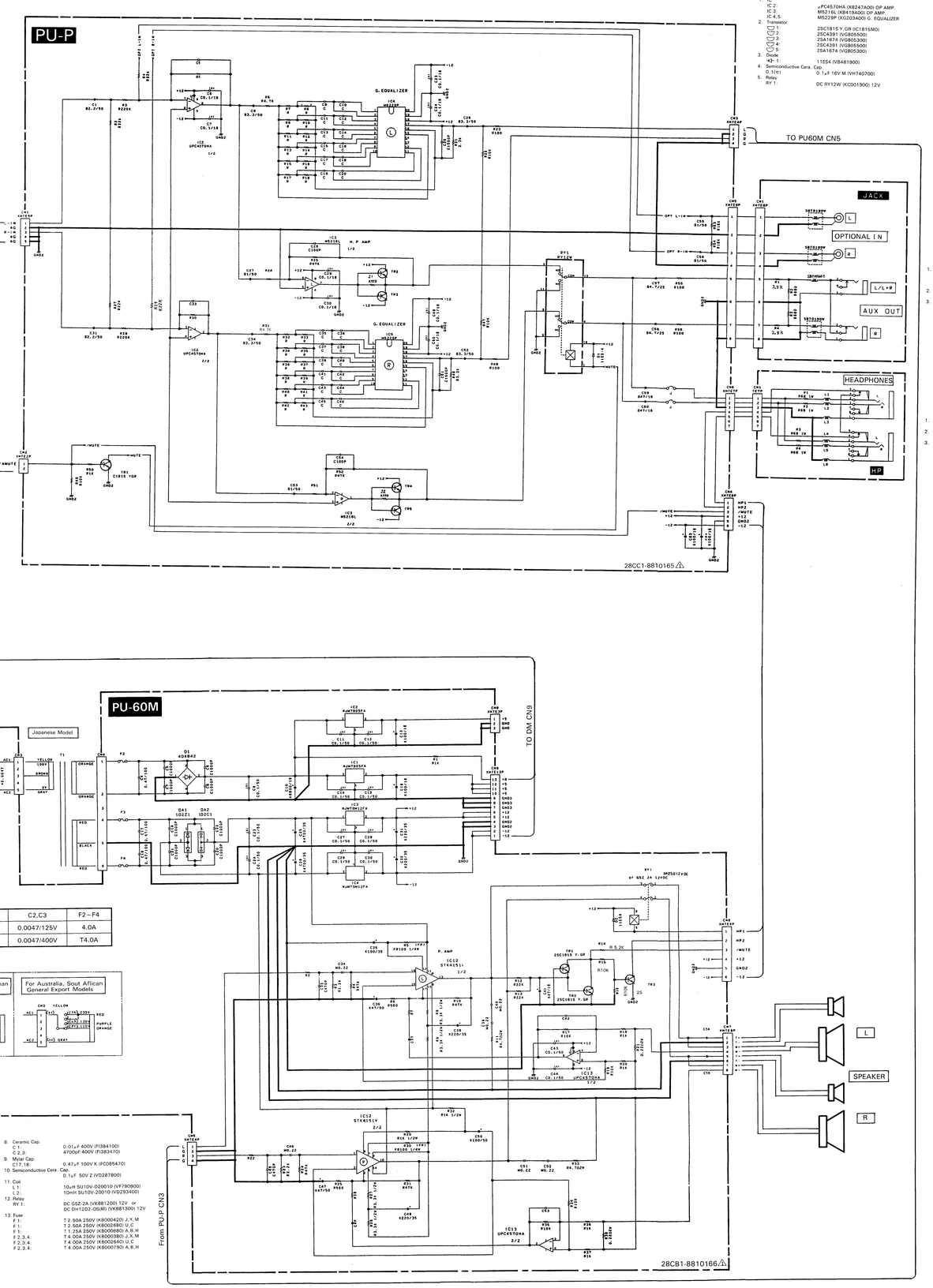

Circuit Board : PU-P (NX005650) XI89680
1. IC
IC 1 : μPC4570HA (XB247A00) OP AMP.
IC 2 : MS216L (XB419A00) OP AMP.
IC 3 : MS229P (XG203A00) G. EQUALIZER
IC 4,5 :
2. Transistor
Q 1 : 2SC1815 Y,GR (IC1815M0)
Q 2 : 2SC4391 (VG805500)
Q 3 : 2SA1974 (VG805300)
Q 4 : 2SC4391 (VG805500)
Q 5 : 2SA1974 (VG805300)
3. Diode
HD-1 : 11ES4 (VB481900)
4. Semiconductive Cera. Cap.
0.1(≡) : 0.1μF 16V M (VH740700)
5. Relay
RY 1 : DC RY12W (KC001900) 12V

Circuit Board : JACK (NX005630) XI895A0
1. Coil
SBT: 80μH SBT-0180W (VF456600)
⊕ SBT: 60μH SBT-0460T (VD473700) or
20μH FL5R2000NT (VB835000)
2. Phone Jack
OPTIONAL: Monaural (LB202330) OPTIONAL IN L R
3. Pin Jack
AUXOUT: YKC21-0188 (VI145300) AUX. L(L+R) R

Circuit Board : HP (NX005640) XJ522A0
1. Semiconductive Cera. Cap.
0.1(≡) : 0.1μF 16V Z (FZ004110)
2. Coil
L 1~6 : 20μH FL5R2000N (VB971100)
3. Phone Jack
HP 1,2 : YKB21-5006 (LB101870) HEADPHONES

Models	C1	C2,C3	F2 – F4
US & Canadian	0.01/125 V	0.0047/125V	4.0A
North European	0.01/400V	0.0047/400V	T4.0A

Circuit Board : PU60M (VK560800) XI89780 J,K,M
PU60M (VK561000) XI89780 L,C
PU60M (VK561000) XI89780 A,B,H
1. IC
IC 1,2 : NJM7805FA (KC719A00) 5V REGULATOR
IC 3 : NJM78M12FA (KD341A00) +12V REGULATOR
IC 4 : NJM79M12FA (KD343A00) -12V REGULATOR
IC12 : STK4151V (KC038A00) POWER
IC13 : μPC4570HA (XB247A00) OP AMP.
2. Transistor
Q 1,2 : 2SC1815 Y,GR (IC1815M0)
Q 3 : 2SC3516 L,K (VD895200)
3. Diode
D10 : 11ES4 (VB481900)
4. Diode Stack
DA 1 : 1D2Z1 2A 200V (VB493300)
DA 2 : 1D2C1 2A 200V (VB493200)
D 1 : S4VB20 2.6A200V (IH001090) or
4D4B42 3A 200V (IH001790)
5. Metal Oxide Film Resistor
R11,33 : 4.7Ω 2W J (VC755500)
R21,38 : 0.22Ω 2W J (VC751900)
6. Fuse Resistor
R30 : 100Ω 1/4 J (HW095100)
7. Electrolytic Cap.
C10 : 6800μF 16V (UJ739680)
C25,26 : 4700μF 35V (UJ759470)
8. Ceramic Cap.
C 1 : 0.01μF 400V (FI384100)
C 2,3 : 4700pF 400V (FI383470)
9. Mylar Cap.
C17,18 : 0.47μF 100V K (FC085470)
10. Semiconductive Cera. Cap.
0.1μF 50V Z (VD287800)
11. Coil
L 1 : 10μH SU10V-020010 (VF790900)
L 2 : 10mH SU10V-20010 (VU293400)
12. Relay
RY 1 : DC G5Z-2A (VK881200) 12V or
DC DH12D2-DSIMI (VK881300) 12V
13. Fuse
F 1 : T 2.50A 250V (KB000420) J,K,M
F 1 : T 2.50A 250V (KB002680) U,C
F 1 : T 1.25A 250V (KB000880) A,B,H
F 2,3,4 : T 4.00A 250V (KB000380) J,K,M
F 2,3,4 : T 4.00A 250V (KB002640) U,C
F 2,3,4 : T 4.00A 250V (KB000790) A,B,H