Clavinova

CVP-303 / CVP-303M / CVP-303C

SERVICE MANUAL



CVP-303



CVP-303M



CVP-303C

CONTENTS

SPECIFICATIONS 3
PANEL LAYOUT 5
DISASSEMBLY PROCEDURE 8
LSI PIN DESCRIPTION 22
IC BLOCK DIAGRAM 27
CIRCUIT BOARDS 29
TEST PROGRAM 52
VERSION UPGRADE 58
DATA BACKUP 61
RESTORING THE FACTORY-PROGRAMMED SETTING. 65
INITIALIZING INTERNET SETTING 67
FACTORY SET 67
SYSTEM BOOTING FLOWCHART 68
MIDI IMPLEMENTATION CHART 70
MIDI DATA FORMAT 71
PARTS LIST
BLOCK DIAGRAM
CIRCUIT BOARD LAYOUT & WIRING
OVERALL CIRCUIT DIAGRAM

CL 001723

YAMAHA
HAMAMATSU, JAPAN

Copyright (c) Yamaha Corporation. All rights reserved. PDF-K4562 '04.06

IMPORTANT NOTICE

This manual has been provided for the use of authorized Yamaha Retailers and their service personnel. It has been assumed that basic service procedures inherent to the industry, and more specifically Yamaha Products, are already known and understood by the users, and have therefore not been restated.

WARNING : Failure to follow appropriate service and safety procedures when servicing this product may result in personal injury, destruction of expensive components and failure of the product to perform as specified. For these reasons, we advise all Yamaha product owners that all service required should be performed by an authorized Yamaha Retailer or the appointed service representative.

IMPORTANT : This presentation or sale of this manual to any individual or firm does not constitute authorization certification, recognition of any applicable technical capabilities, or establish a principal-agent relationship of any form.

The data provided is belived to be accurate and applicable to the unit(s) indicated on the cover. The research engineering, and service departments of Yamaha are continually striving to improve Yamaha products. Modifications are, therefore, inevitable and changes in specification are subject to change without notice or obligation to retrofit. Should any discrepancy appear to exist, please contact the distributor's Service Division.

WARNING : Static discharges can destroy expensive components. Discharge any static electricity your body may have accumulated by grounding yourself to the ground bus in the unit (heavy gauge black wires connect to this bus.)

IMPORTANT : Turn the unit OFF during disassembly and parts replacement. Recheck all work before you apply power to the unit.

WARNING: CHEMICAL CONTENT NOTICE!

The solder used in the production of this product contains LEAD. In addition, other electrical/electronic and/or plastic (Where applicable) components may also contain traces of chemicals found by the California Health and Welfare Agency (and possibly other entities) to cause cancer and/or birth defects or other reproductive harm.

DO NOT PLACE SOLDER, ELECTRICAL/ELECTRONIC OR PLASTIC COMPONENTS IN YOUR MOUTH FOR ANY REASON WHAT SO EVER!

Avoid prolonged, unprotected contact between solder and your skin! When soldering, do not inhale solder fumes or expose eyes to solder/flux vapor!

If you come in contact with solder or components located inside the enclosure of this product, wash your hands before handling food.

IMPORTANT NOTICE FOR THE UNITED KINGDOM

Connecting the Plug and Cord

IMPORTANT : The wires in this mains lead are coloured in accordance with the following code:

BLUE : NEUTRAL
BROWN : LIVE

As the colours of the wires in the mains lead of this apparatus may not correspond with the coloured makings identifying the terminals in your plug proceed as follows:

The wire which is coloured BLUE must be connected to the terminal which is marked with the letter N or coloured BLACK.

The wire which is coloured BROWN must be connected to the terminal which is marked with the letter L or coloured RED.

Making sure that neither core is connected to the earth terminal of the three pin plug.

■ WARNING

Components having special characteristics are marked ⚠ and must be replaced with parts having specification equal to those originally installed.

■ SAVING DATA

Saving and backing up your data



Be sure to perform it

The data of the types listed below are lost when you turn off the power to the instrument. Save the data to the USER tab display, floppy disk, SmartMedia card, or appropriate external media.

- Recorded/Edited Songs
- Created/Edited Styles
- Edited Voices
- Memorized One Touch Settings
- Edited MIDI settings

SPECIFICATIONS

Sound Source			AWM Dynamic Stereo Sampling
Keyboard			GH Keyboard 88 keys
Display			320 x 240 dots QVGA B/W LCD
	Music Score, Lyrics		YES
Voice	Polyphony (max)		96
	Voice Selection		319 voices + 480 XG Voices 14 Drum/SFX Kits + GM2 + GS (GS Voices for GS Song playback)
		Mega Voice	
		Regular Voice	271
		Natural! Voice	21
		Sweet! Voice	11
		Cool! Voice	5
		Live! Voice	1
		Organ Flutes!	10
	Sound Creator		YES
Effects	Effect Blocks	Reverb/Chorus/DSP	6
		Microphone	1
	Effect Types	Reverb/Chorus/DSP	Reverb: 35 Preset + 3 User Chorus: 30 Preset + 3 User DSP 1: 183 Preset + 3 User DSP 2—4: 105 Preset + 10 User
		Master EQ	5 Preset + 2 User
		Part EQ	27 Parts
	Vocal Harmony		61 Preset + 10 User
Accompaniment Style	Accompaniment Styles		258
		Pro Styles	208
		Session Styles	14
		Pianist Styles	36
	Mega Voice Styles		
	Fingering		Single Finger, Fingered, Fingered On Bass, Multi Finger, AI Fingered, Full Keyboard, AI Full Keyboard
	Style Creator		YES
	OTS (One Touch Setting)		4 for Each Style
	OTS Link		YES
	Music Finder	Preset	YES
		Edit	YES
Song	Preset Songs		120
	Guide		Follow Lights, Any Key, Karao-Key,Vocal CueTIME
		Guide Lamp	YES
	performance assistant technology		YES
	Recording		Quick Recording, Multi Recording, Step Recording, Song Editing
		Record Channels	16
Internet Direct Connection			External Adapter (via USB to DEVICE)
Memory Device	Floppy Disk (2HD, 2DD)		External Adapter (via USB to DEVICE)
	Hard Disk		External Adapter (via USB to DEVICE)
	Flash Memory (Internal)		1.5 MB
	SmartMedia Slot		1 (Compatible with SmartMedia FAT 12 or 16 format.)

Tempo	Tempo Range		5 - 500, Tap Tempo
	Metronome		YES
		Sound	Bell on/off, Human Voices (5 Languages)
Registration Memory	Buttons		8
	Regist. Sequence/Freeze		YES
Others	Demo/Help		YES
	Language for Display		6 Languages (English, Japanese, German, French, Spanish, Italian)
	Direct Access		YES
	Piano Button (incl. Piano Lock)		YES
	Transpose		Keyboard/Song/Master
	Scale Type		9
USB Connection	USB to HOST(Computer)		YES
	USB to DEVICE		YES
Other Connectors			PHONES x 2, MIDI (THRU, OUT, IN), AUX PEDAL, AUX IN (L/L+R, R), AUX OUT (L/L+R, R), AUX OUT (LEVEL FIXED) (L, R)
			MIC. (INPUT VOLUME, MIC./LINE IN)
Pedals	Functions		VOLUME, SUSTAIN, SOSTENUTO, SOFT, GLIDE, SONG PLAY/PAUSE, STYLE START/STOP, etc.
Amplifiers/Speakers	Amplifiers		40 W x 2
	Speakers		(16 cm + 5 cm) x 2
Dimensions [W x D x H] (with the Music Rest)			1432 mm x 614 mm x 885 mm [56-3/8" x 24-3/16" x 34-13/16"] (1432 mm x 614 mm x 1044 mm) [56-3/8" x 24-3/16" x 41-1/8"]
Weight			70 kg (154 lbs., 5 oz)
Optional Accessories	Headphones		HPE-160
	Foot Switch		FC 4/FC 5
	Foot Controller		FC 7
	USB-FDD Unit		UD-FD01
Accessories			Guide to Yamaha Online Member Product User Registration "50 greats for the Piano" Music Book, Owner's Manual, Data List **The following items may be included or optional, depending on your locale:** Floppy Disk Drive, SmartMedia card, Bench
Output Impedance			PHONES: 33 Ω (Recommend) AUX OUT (L/L+R,R): 600 Ω AUX OUT (LEVEL FIXED) (L, R): 600 Ω

PANEL LAYOUT

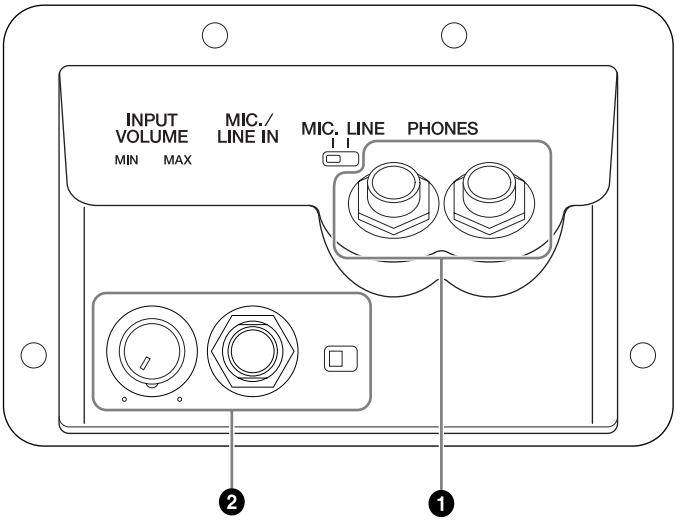

❶ [PHONES] jacks
❷ [MIC./LINE IN] jack

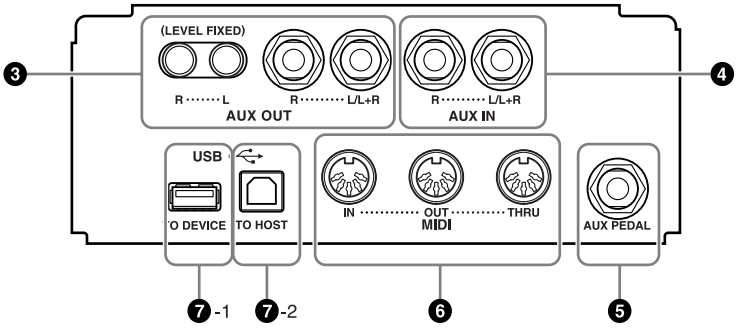

❸ [AUX OUT] jacks
❹ [AUX IN] jacks
❺ [AUX PEDAL] jack
❻ [MIDI] terminals
❼-1 [USB TO DEVICE] terminals
❼-2 [USB TO HOST] terminals

• Front Panel

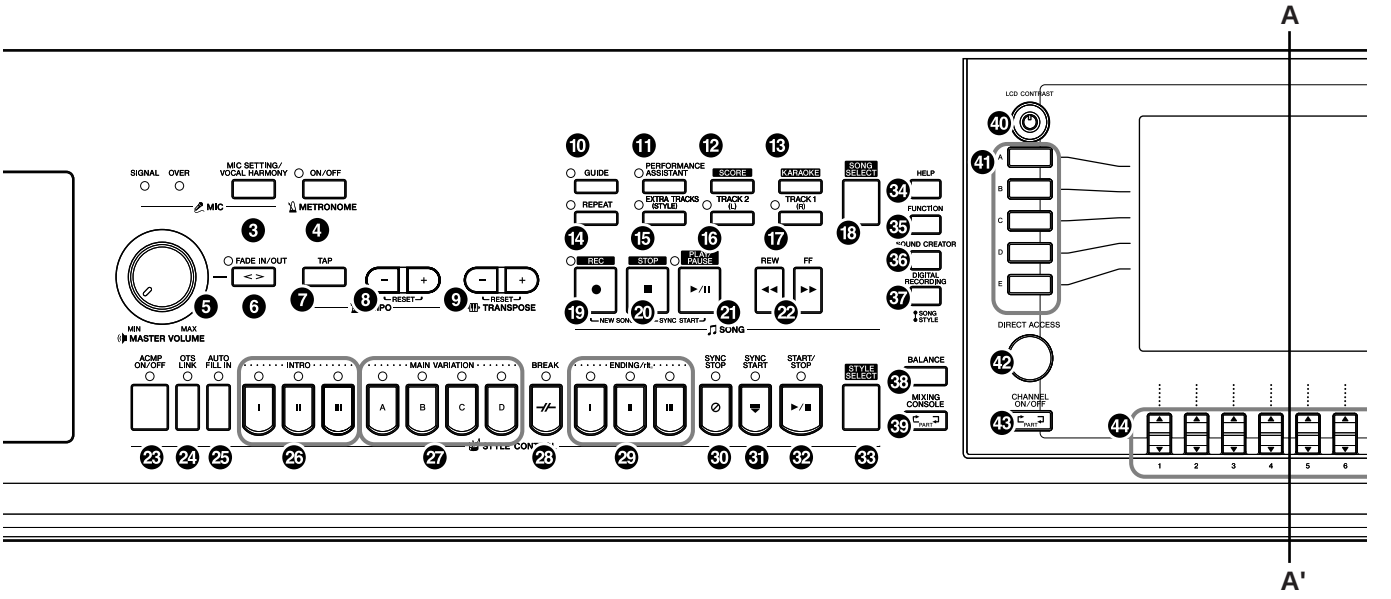



❶ [POWER] switch
❷ SmartMedia slot

MIC.

❸ [MIC SETTING / VOCAL HARMONY] button

METRONOME

❹ [ON/OFF] button

VOLUME

❺ [MASTER VOLUME] dial
❻ [FADE IN / OUT] button

TEMPO

❼ [TAP] button
❽ [–] [+] buttons

TRANSPOSE

❾ [–] [+] buttons

SONG

❿ [GUIDE] button
⓫ [PERFORMANCE ASSISTANT] button
⓬ [SCORE] button
⓭ [KARAOKE] button
⓮ [REPEAT] button
⓯ [EXTRA TRACKS (STYLE)] button
⓰ [TRACK 2 (L)] button
⓱ [TRACK 1 (R)] button
⓲ [SONG SELECT] button
⓳ [REC] button
⓴ [STOP] button
㉑ [PLAY / PAUSE] button
㉒ [REW] / [FF] buttons

STYLE CONTROL

㉓ [ACMP ON / OFF] button
㉔ [OTS LINK] button
㉕ [AUTO FILL IN] button
㉖ INTRO [I] / [II] / [III] buttons
㉗ MAIN VARIATION [A] / [B] / [C] / [D] buttons
㉘ [BREAK] button
㉙ ENDING/rit. [I]/[II]/[III] buttons
㉚ [SYNC STOP] button
㉛ [SYNC START] button
㉜ [START/STOP] button
㉝ [STYLE SELECT] button

㉞ [HELP] button
㉟ [FUNCTION] button
㊱ [SOUND CREATOR] button
㊲ [DIGITAL RECORDING] button
㊳ [BALANCE] button
㊴ [MIXING CONSOLE] button

㊵ [LCD CONTRAST] knob
㊶ [A]–[J] buttons
㊷ [DIRECT ACCESS] button
㊸ [CHANNEL ON/OFF] button
㊹ [1 ▲▼]–[8 ▲▼] buttons

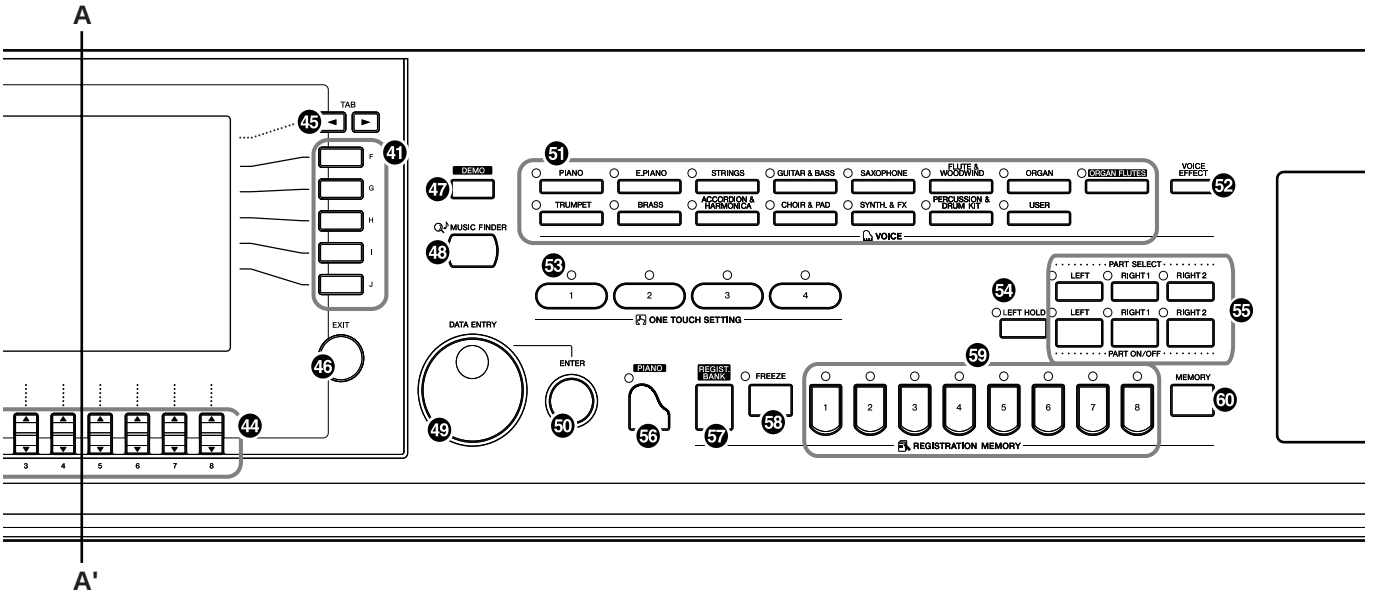

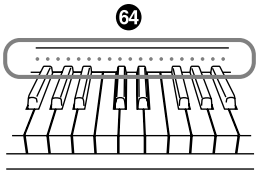

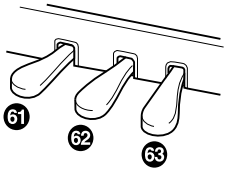

㊺ TAB [◄][►] buttons
㊻ [EXIT] button
㊼ [DEMO] button
㊽ [MUSIC FINDER] button
㊾ [DATA ENTRY] dial
㊿ [ENTER] button

VOICE

(51) VOICE buttons
(52) [VOICE EFFECT] button

ONE TOUCH SETTING

(53) [1] – [4] buttons

(54) [LEFT HOLD] button

PART

(55) PART buttons

PIANO Setting

(56) [PIANO] button

REGISTRATION MEMORY

(57) [REGIST. BANK] button
(58) [FREEZE] button
(59) [1] - [8] buttons
(60) [MEMORY] button

Pedals

(61) Left pedal
(62) Sostenuto pedal
(63) Damper pedal

(64) Keyboard guide lamps

■ DISASSEMBLY PROCEDURE

1. Headphone Hanger

(Time required : About 1 minute)

Remove the two (2) screws marked [28b]. The headphone hanger can then be removed. (Fig. 1)

2. Mic. & Phones Unit, MIC and HP Circuit Boards (Time required : About 3 minutes each)

2-1. Remove the four (4) screws marked [37]. The mic. & phones unit can then be removed. (Fig. 1)

2-2. **MIC Circuit Board**

2-2-1. Remove the input volume knob, the hexagonal nut marked [N1] and the washer marked [W1]. (Fig. 2)

2-2-2. Remove the hexagonal nut marked [40A] and the washer marked [50A]. The MIC circuit board can then be removed. (Fig. 2)

* ***When installing the INPUT VOLUME knob, set it to the VOL. MIN position, that is, align the bar on the knob with the point on the case as shown in the figure. (Fig. 2)***

2-3. **HP Circuit Board**

Remove the two (2) hexagonal nuts marked [40B] and the two (2) washers marked [50B]. The HP circuit board can then be removed. (Fig. 2)

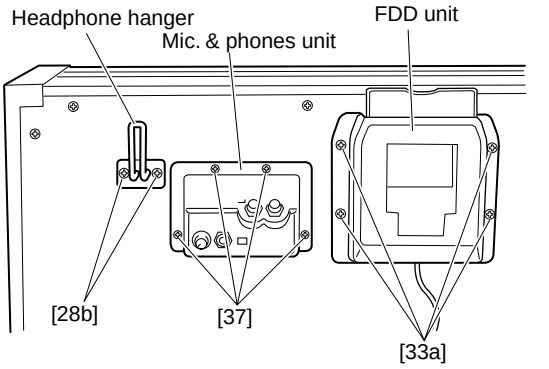

[28b]: Truss Head Screw 4.0x10 MFZN2BL (VT196400)
[33a]: Truss Head Screw 4.0x10 MFZN2BL (VT196400)
[37]: Bind Head Tapping Screw-1 3.5x14 MFZN2BL (EP030250)

(Fig. 1)

● **Mic. & Phones Unit**

<Front view>

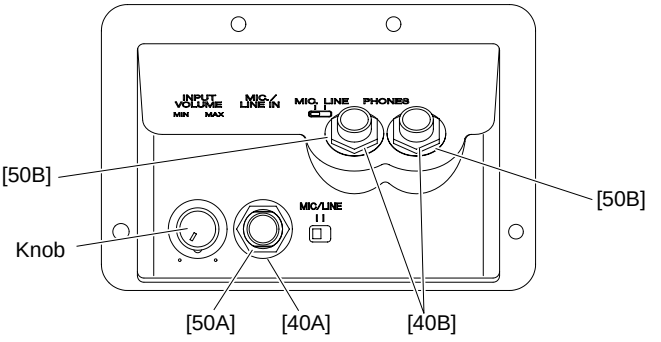

<Side view>

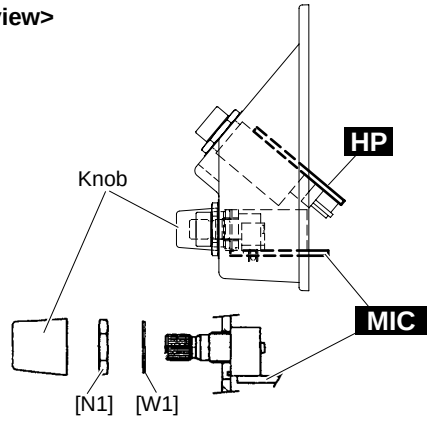

[40]: Hexagonal Nut 12.0x14x2 MFZN2BL (VB508600)
[50]: Washer (VJ869400)
[N1]: Hexagonal Nut
[W1]: Washer

(Fig. 2)

3. Floppy Disk Drive (U, E, B models only)

(Time required : About 3 minutes)

3-1. Disconnect the USB connector.

3-2. Remove the four (4) screws marked [33a]. The FDD unit can then be removed. (Fig. 1)

3-3. Remove the USB-3.5FDD attached by the double-sided tapes from the FDD holder assembly. (Fig. 3)

* ***Note that once you remove the double-sided tape (FDD cushion), you cannot use it again. In the replacing of USB-3.5 FDD, use new double-sided tapes (FDD cushions) to install the FDD.***

● **FDD Unit**

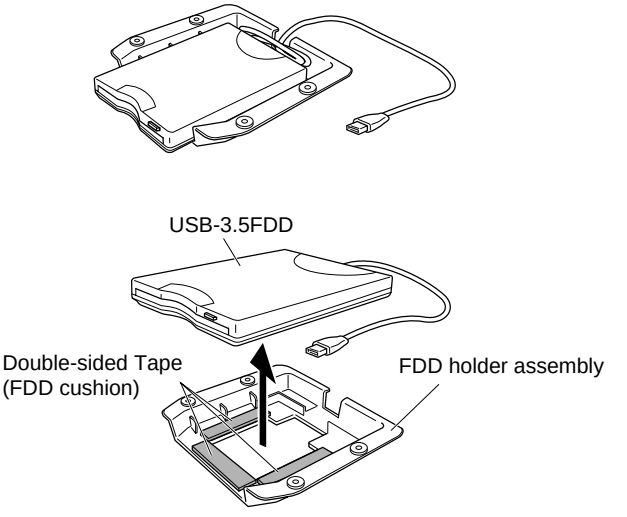

(Fig. 3)

4. Music Rest Assembly

(Time required : About 1 minute)

Remove the two (2) screws marked [12A] from both sides of the assembly. The music rest assembly can then be removed. (Fig. 4)

5. Back Board Assembly

(Time required : About 1 minute)

5-1. Disconnect the AC cord and the PK-LF cable. (Fig. 5-1)

5-2. Remove the two (2) screws marked [13b] and the four (4) screws marked [13d]. The back board assembly can then be removed. (Fig. 5)

6. Top Board Assembly

(Time required : About 1 minute)

6-1. Close the key cover.

6-2. Remove the three (3) screws marked [32]. The top board assembly can then be removed by moving forward and lifting up. (Fig. 5)

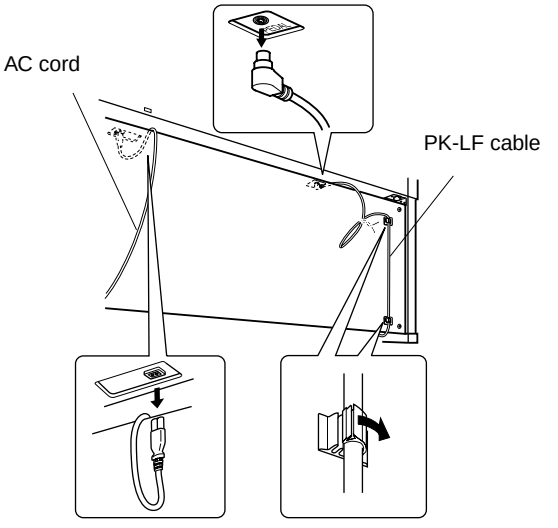

(Fig. 5-1)

7. Circuit Boards and Assembles (Main Unit Section)

(Time required: About 5 minutes each)

7-1. Remove the top board assembly. (See procedure 6)

7-2. Slide the key cover rearward, remove its guide pin of the back key cover from the opening for the arm. Then the back key cover can be opened. (Fig. 6)

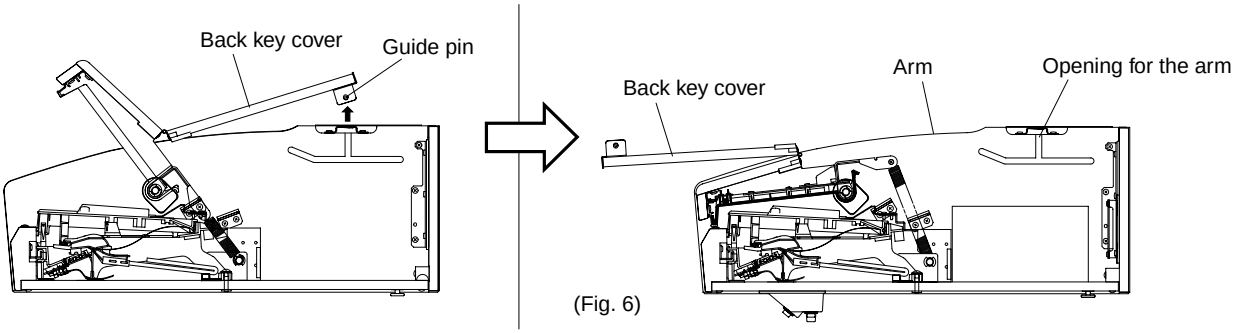

(Fig. 6)



[12A]: Bind Head Tapping Screw-1 3.5x16 MFZN2BL (EP030260)

(Fig. 4)

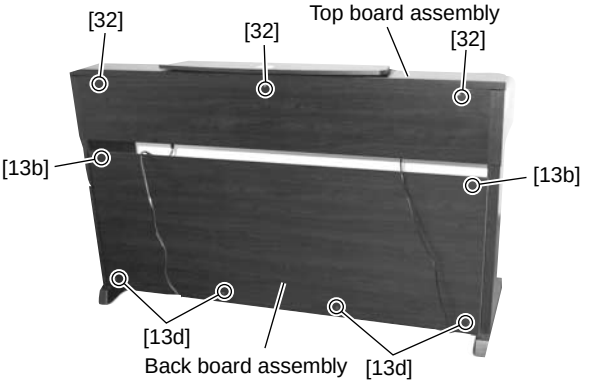

CVP-303/CVP-303M

[13b]: Truss Head Screw 4.0x12 MFZN2BL (VP367300)

[13d]: Truss Head Tapping Screw-1 4.0x20 MFZN2BL (03747290)

[32]: Truss Head Screw 4.0x16 MFZN2BL (V6207400)

CVP-303C

[13b]: Truss Head Screw 4.0x12 MFC2BR (V6135000)

[13d]: Truss Head Tapping Screw-1 4.0x20 MFC2BR (VB164600)

[32]: Truss Head Screw 4.0x16 MFC2BR (V9446400)

(Fig. 5)

7-3. Each circuit board and assembly can be removed by removing its fixing screws as listed below.

Circuit board and Assembly	Ref. No.	Screw			QTY	Fig.
PK Connector	40C	Bind Head Tapping Screw-1	3.5x12 MFZN2Y	(EP030240)	2	7
PJK Circuit Board	19c	Bind Head Tapping Screw-B	3.0x8 MFZN2BL	(EP600190)	2	7
EQ Circuit Board	38A	Bind Head Tapping Screw-1	3.5x20 MFZN2Y	(EP030470)	4	7
DAC1A Circuit Board	12B	Bind Head Tapping Screw-B	3.0x8 MFZN2Y	(EP600250)	4	7
FU Cover (U.S.A. model only)	106A	Bind Head Tapping Screw-1	3.5x12 MFZN2Y	(EP030240)	2	7
FU60 Assembly	40D	Bind Head Tapping Screw-1	3.5x12 MFZN2Y	(EP030240)	2	7
MA Cover (U.S.A. model only)	106B	Bind Head Tapping Screw-1	3.5x12 MFZN2Y	(EP030240)	2	7
MA80S Assembly	40E	Bind Head Tapping Screw-1	3.5x12 MFZN2Y	(EP030240)	2	7
Jack Assembly	40F	Bind Head Tapping Screw-1	3.5x12 MFZN2Y	(EP030240)	4	7
DM Circuit Board	39A	Bind Head Tapping Screw-B	3.0x8 MFZN2Y	(EP600250)	6	7
Woofer (L or R)	45	Truss Head Tapping Screw-1	4.0x23 MFZN2Y	(WD225900)	4	7
Power Transformer	103	Bind Head Screw	4.0x14 MFZN2Y	(EG340210)	4	7
	120	Flat Wsher (U.S.A. model only)	4.0x12x1.0 MFZN2Y	(VK287600)	4	7
Wire Rail	39B	Bind Head Tapping Screw-B	3.0x8 MFZN2Y	(EP600250)	6	7
NET1 Circuit Board	38B	Bind Head Tapping Screw-1	3.5x20 MFZN2Y	(EP030470)	4	7

DM circuit board has internal DIP switch for switching the display in Japanese or in English (SW3).

DIP switch (SW3)	ON	OFF
LCD display language	Japanese	English
Demonstration music	For Japan	For other than Japan
Access home page to	Server in Japan	Server in U.S.A.

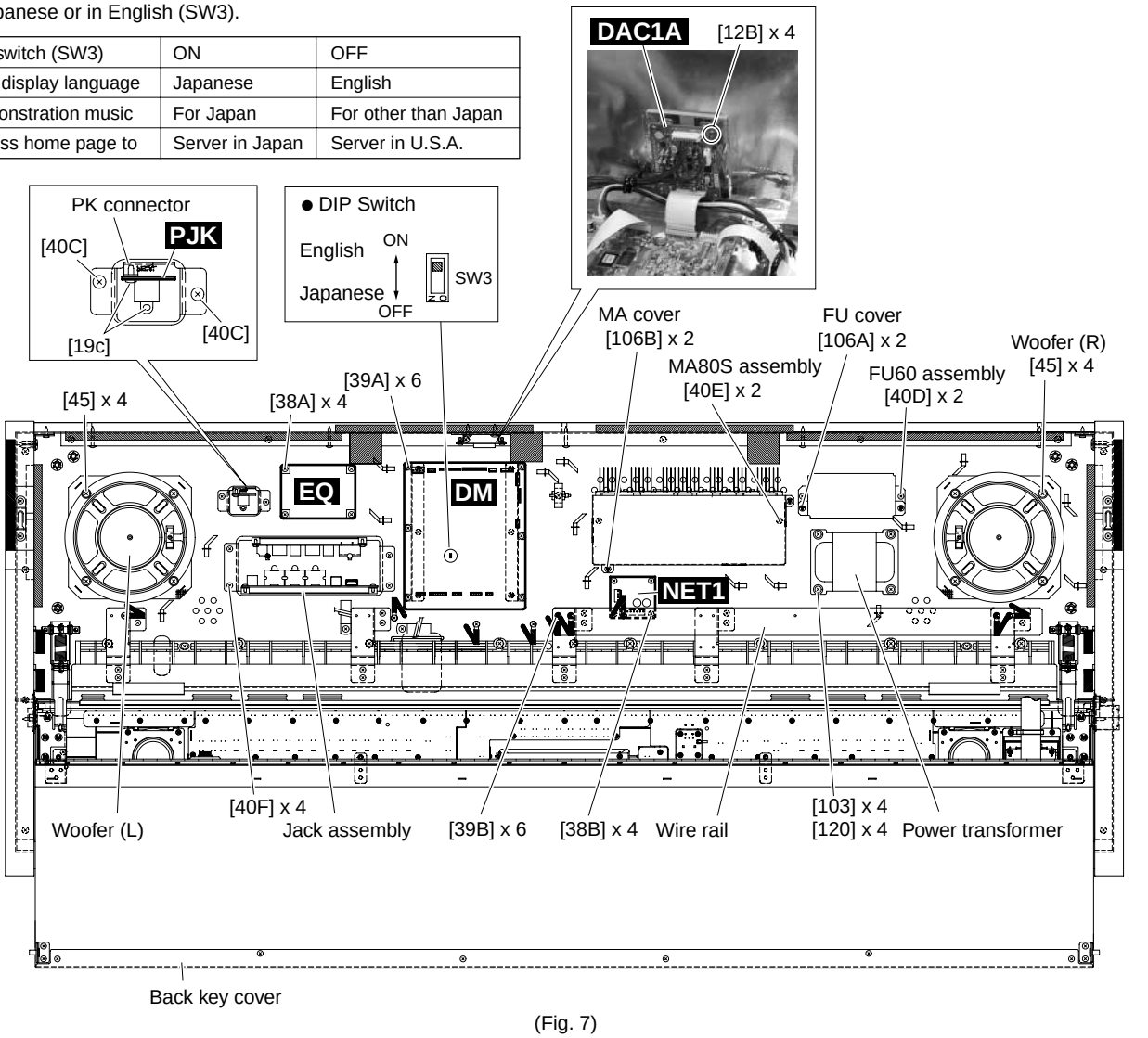

(Fig. 7)

8. AJACK Circuit Board, DJACK Circuit Board

(Time required : About 10 minutes each)

8-1. Remove the top board assembly. (See procedure 6)
8-2. Open the back key cover. (See procedure 7-2)
8-3. Remove the jack assembly. (See procedure 7-3)
8-4. **DJACK Circuit Board**
Remove the two (2) screws marked [7A], the three (3) screws marked [4A], the heagonal nut marked [6A] and the washer marked [5A]. The DJACK circuit board can then be removed. (Fig. 8)
8-5. **AJACK Circuit Board**
Remove the two (2) screws marked [7B], the screw marked [4B], the four (4) heagonal nuts marked [6B] and the four (4) washers marked [5B]. The AJACK circuit board can then be removed. (Fig. 8)

9. White Key, Black Key

(Time required : About 10 minutes)

9-1. Remove the top board assembly. (See procedure 6)
9-2. Open the back key cover. (See procedure 7-2)
9-3. Remove the wire rail. (See procedure 7-3)
9-4. Remove the ten (10) screws marked [40G]. The MT angle assembly and angle can then be removed. (Fig. 9)
9-5. Remove the nine (9) screws marked [30] and the two (2) screws marked [31], move the keyboard assembly rearward. (Fig. 9)

● **Jack Assembly**

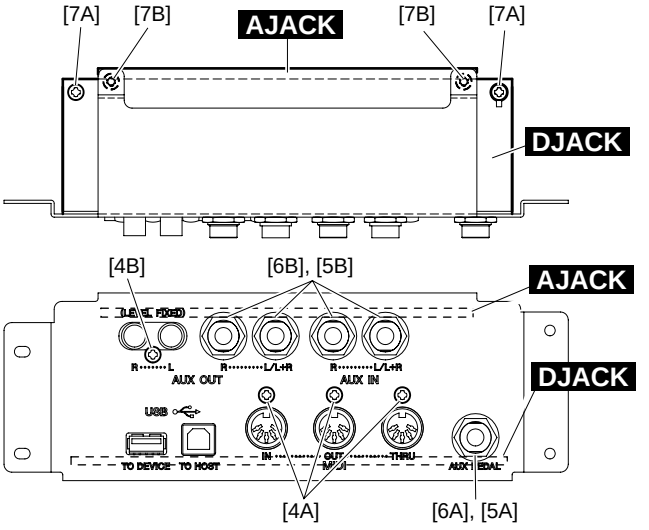

[4]: Bind Head Tapping Screw-B 3.0x8 MFZN2BL (EP600190)
[5]: Washer (VJ869400)
[6]: Hexagonal Nut 12.0x14x2 MFZN2BL (VB508600)
[7]: Bind Head Tapping Screw-B 3.0x8 MFZN2Y (EP600250)

(Fig. 8)

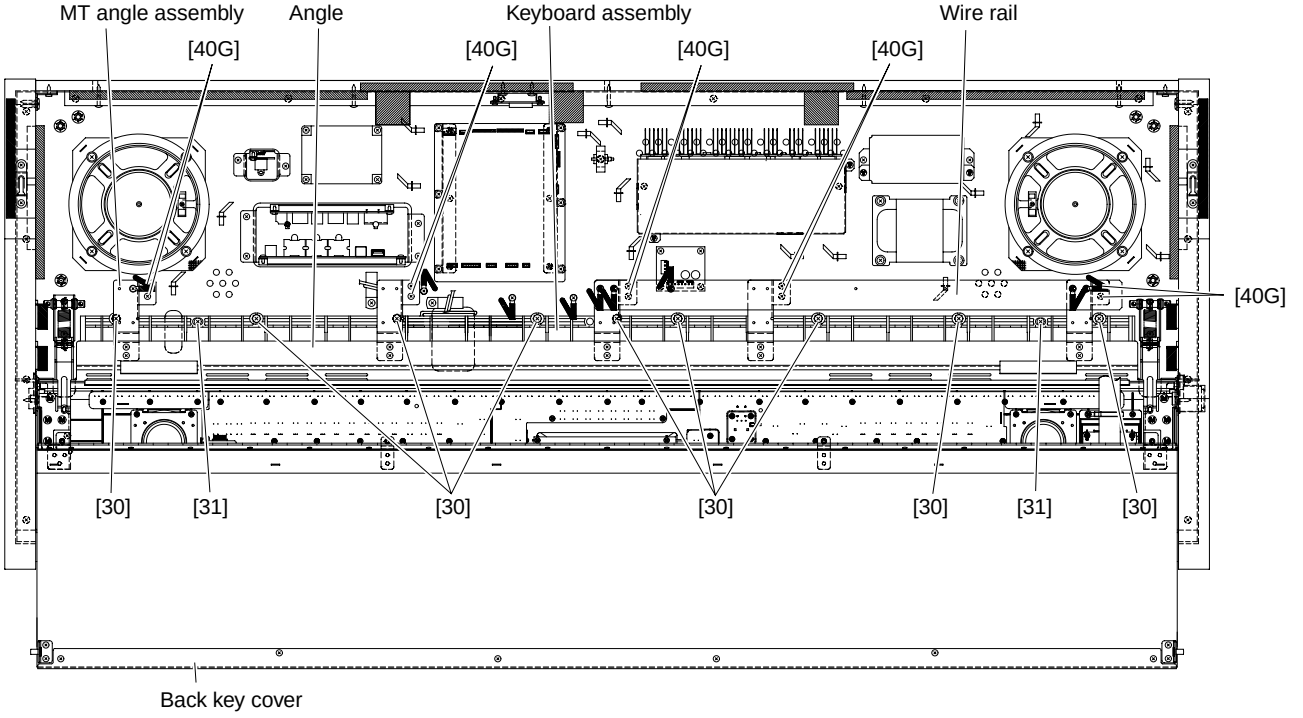

[30]: Pan Head Screw PW5.0x25 MFZN2Y (VV040700)
[31]: Bind Head Tapping Screw-1 4.0x14 MFZN2Y (EP040230)
[40G]: Bind Head Tapping Screw-1 3.5x12 MFZN2Y (EP030240)

(Fig. 9)

9-6. **White key**

In order to release the white key from the stopper, insert a thin plate between the white keys (gap in the direction indicated by the triangle mark, near the fulcrum of the key), press down the stopper marked [A] and move the white key forward. Then the white key being released from the stopper lifts up. (Fig. 10, 11, 12)

* ***Use special care not to move the white key forward so much as to cause damage to the key spring.***

9-7. Hold the key cover assembly under your arm. In this state, move the white key rearward a little. Then the white key can be removed. (Fig. 13)

9-8. **Black key**

The black key can be removed after the white keys on either side have been removed.



If the illustration of a camera is clicked, an animation will flow.

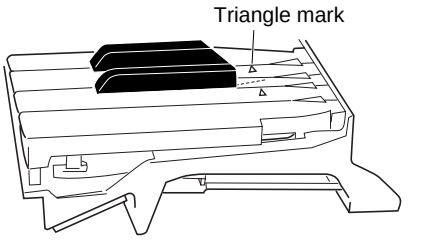

(Fig. 10)

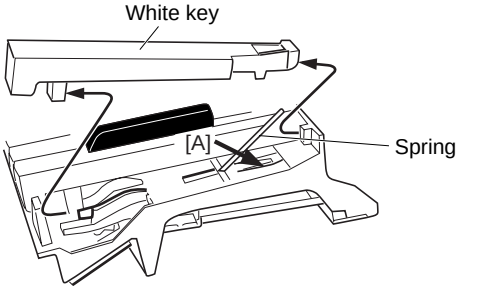

(Fig. 11)

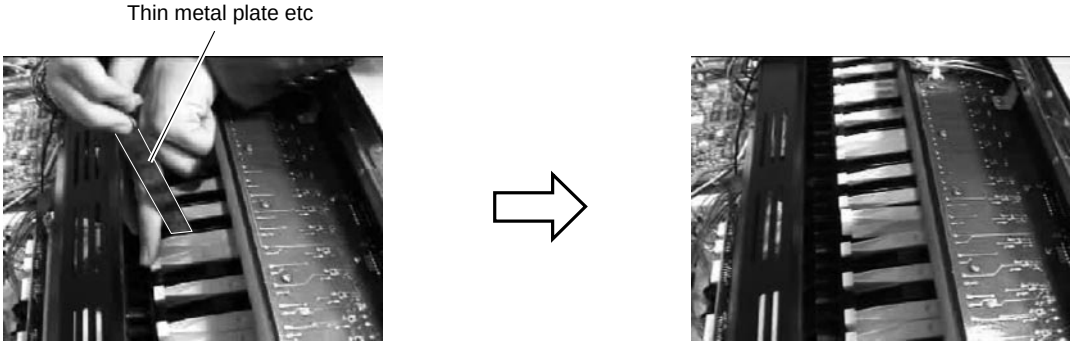

(Fig. 12)

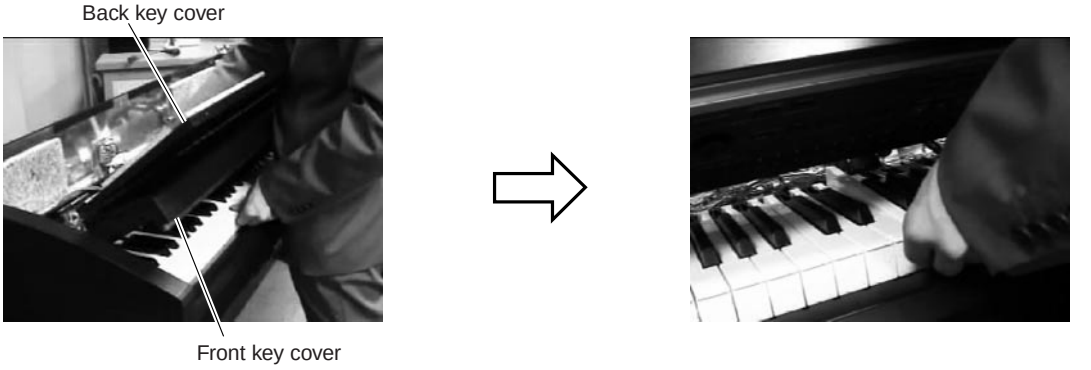

(Fig. 13)

9-9. **Assembling the White Key (Black Key)**

After a key has been fit to part [C] and key guide, make sure that the spring is fixed to the key and then press down part [B] of the key. (Fig. 14)



If the illustration of a camera is clicked, an animation will flow.

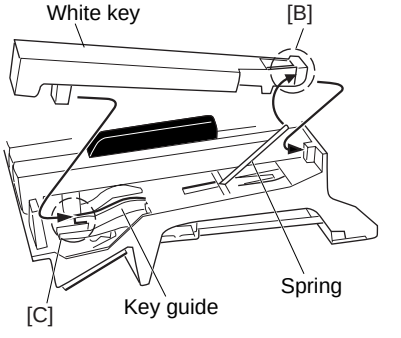

(Fig. 14)

10. Key Cover Assembly

(Time required: About 5 minutes)

10-1. Remove the top board assembly. (See procedure 6)
10-2. Open the back key cover. (See procedure 7-2)
10-3. Remove the screw marked [43], pull off the rod from the spring holder and remove the spring R. (Fig. 15)
* ***Remove the spring L in the same manner.***
10-4. Remove the four (4) screws marked [3]. (Fig. 15)
10-5. Using the tip end of the panel as the fulcrum, pull up the key cover assembly to remove it. (Fig. 16)

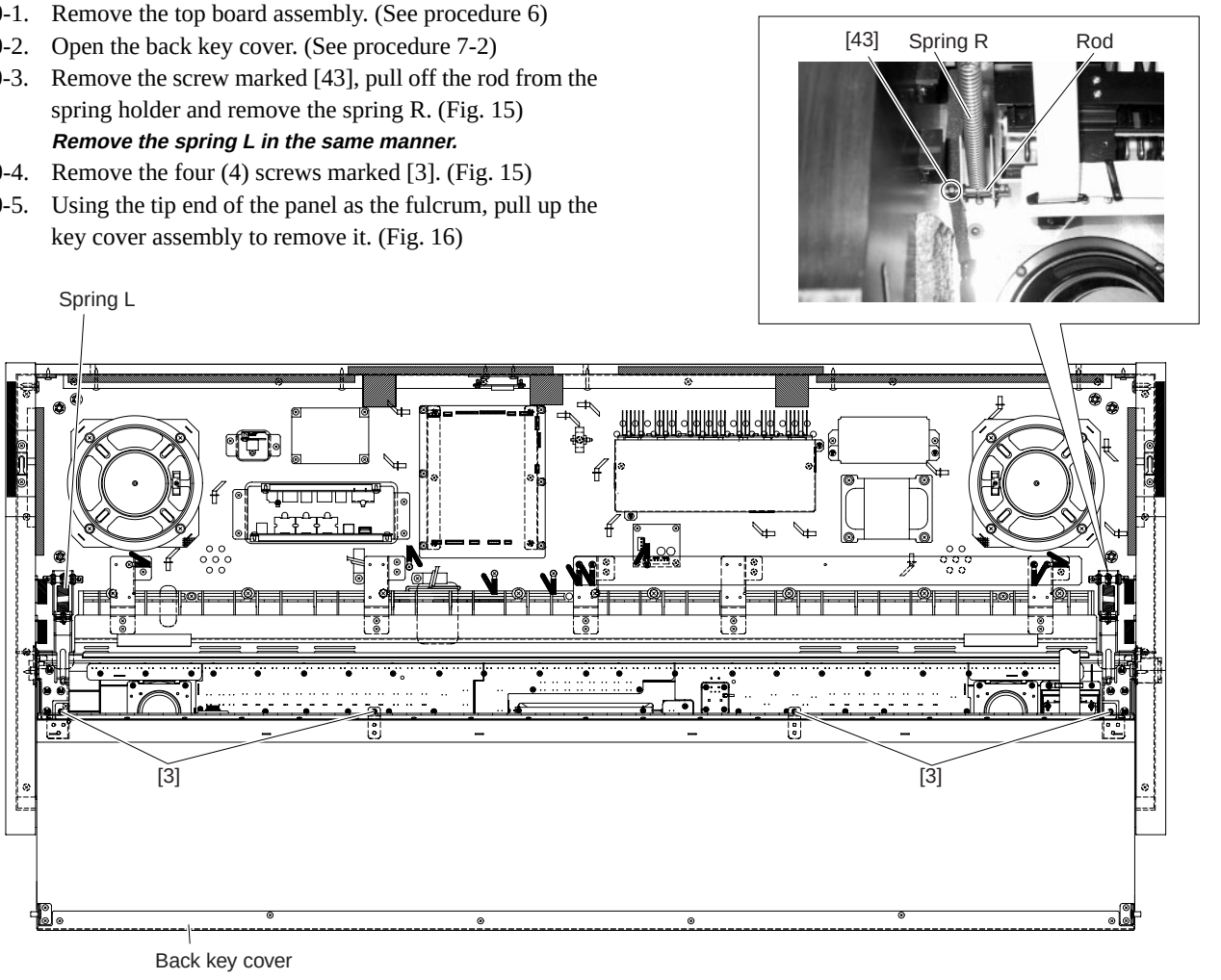

[3]: Bind Head Tapping Screw-B 3.0x10 MFZN2Y (EP600220) [43]: Bind Head Screw 3.0x8 MFZN2Y (VD976600)

(Fig. 15)

Installation of Key Cover

Fit the sash of the key cover over the tip end of the panel and install the key cover, using care for the balance between right and left. When the key cover is installed properly, lugs of the panel (CP holders) at 6 locations should fit in the groove in the key cover. If there is a lug (CP holder) that is not fitted in the groove, push around it so that it will fit in the groove. (Fig. 16, Fig. 17)

● **Key Cover & Panel Assembly**

<Side view>

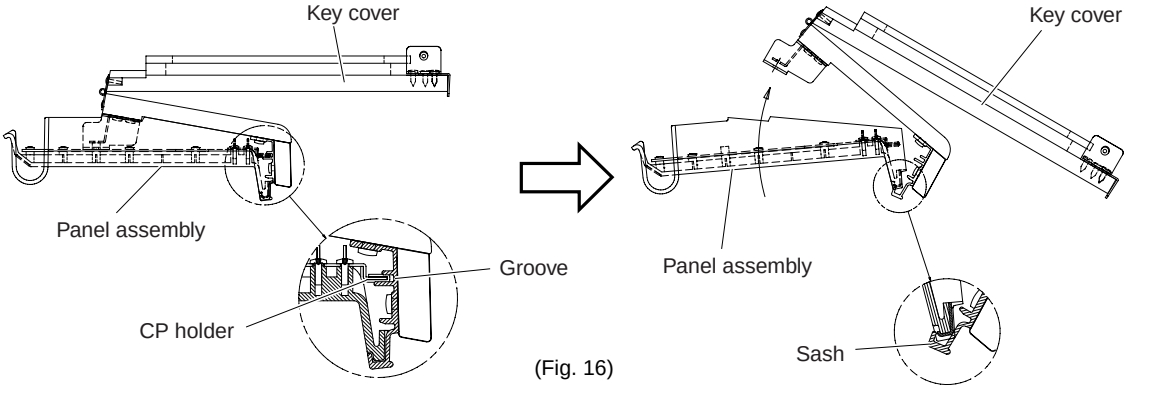

(Fig. 16)

11. Circuit Boards and Assembles (Panel Assembly Section)

(Time required: About 10 minutes each)

11-1. Remove the top board assembly. (See procedure 6)
11-2. Open the back key cover. (See procedure 7-2)
11-3. Remove the key cover assembly. (See procedure 10)
11-4. Put cloth or the like between the panel assembly and keyboard to prevent the panel assembly from being distorted.
11-5. Remove the screws listed below. Then the circuit board and assembly can be removed.

Circuit board and Assembly	Ref. No.	Screw			QTY	Fig.
Speaker Assembly (L or R)	620A	Bind Head Tapping Screw-B	3.0x8 MFZN2Y	(EP600250)	4	17
Speaker (L or R)	80c	Bind Head Tapping Screw-B	3.0x8 MFZN2BL	(EP600190)	4	17
SM *1	625	Bind Head Tapping Screw-B	3.0x6 MFZN2BL	(EP600230)	2	17
INV	620B	Bind Head Tapping Screw-B	3.0x8 MFZN2Y	(EP600250)	4	17
LCD	620C	Bind Head Tapping Screw-B	3.0x8 MFZN2Y	(EP600250)	4	17
MV2		Knob (MASTER VOLUME)			1	17
	620D	Bind Head Tapping Screw-B	3.0x8 MFZN2Y	(EP600250)	4	17
ENC		Encoder Knob (DATA ENTRY)			1	17
	620E	Bind Head Tapping Screw-B	3.0x8 MFZN2Y	(EP600250)	4	17
PNL (PNL1 *2, PNL2) + PNC *3 + PNR (PNR1 *4, PNR2)	620F	Bind Head Tapping Screw-B	3.0x8 MFZN2Y	(EP600250)	70	17

***1** **Before replacing the SM circuit board, check to ensure that Smart Media is not inserted.**

***2** **To remove the PNL1 circuit board, be sure to remove the MV2 circuit board first.**

***3** **The PNL1 circuit board (CN103) and PNC circuit board (CN103) are connected directly using connectors.**
When removing the PNL1 circuit board and PNC circuit board, use care not to cause damage to the connector (CN103).

***4** **To remove the PNR1 circuit board, be sure to remove the ENC circuit board first.**

● **Panel Assembly**

<Top view>

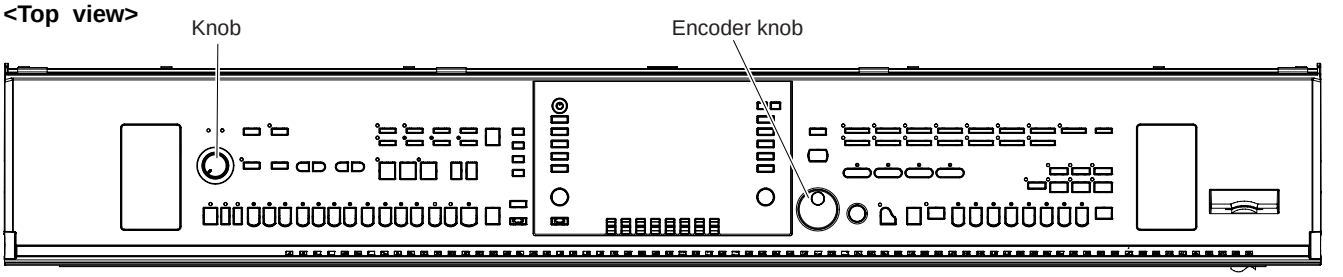

<Bottom view>

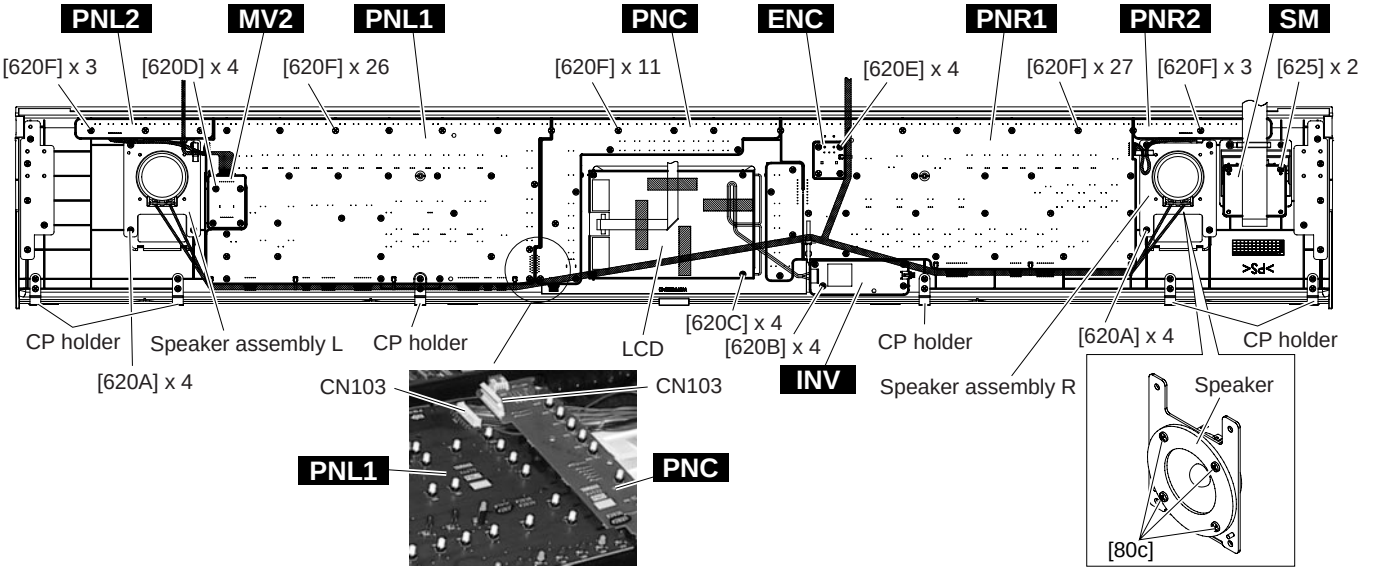

(Fig. 17)

12. Panel Assembly

(Time required: About 10 minutes)

12-1. Remove the top board assembly. (See procedure 6)
12-2. Open the back key cover. (See procedure 7-2)
12-3. Remove the key cover assembly. (See procedure 10)
12-4. Put cloth or the like between the panel assembly and keyboard.
12-5. Remove the four (4) screws marked [44] and then remove the turning axle assembly R from the panel assembly. (Fig. 18)

* ***When installing the turning axle assembly R, carefully check for the direction of the damper (turning axle) on the side of the arm assembly R. The turning axle assembly R should be installed in such direction that letters ("TH") stamped on the damper (turning axle) is upside down. Installation otherwise will damage the damper.***

12-6. Remove the turning axle assembly L in the same manner. (Fig. 18)

* ***Be sure to remove the turning axle assembly R first.***

12-7. Remove the panel assembly. (Fig. 18)

13. Key Cover & Panel Assembly

(Time required: About 10 minutes)

13-1. Remove the top board assembly. (See procedure 6)
13-2. Open the back key cover. (See procedure 7-2)
13-3. Remove the spring L and R. (See procedure 10-3)
13-4. Put cloth or the like between the panel assembly and keyboard.
13-5. Remove the turning axle assembly R from the panel assembly. (See procedure 12-5)
13-6. Remove the turning axle assembly L from the panel assembly. (See procedure 12-6)
13-7. Remove the key cover and panel assembly. (Fig. 18)

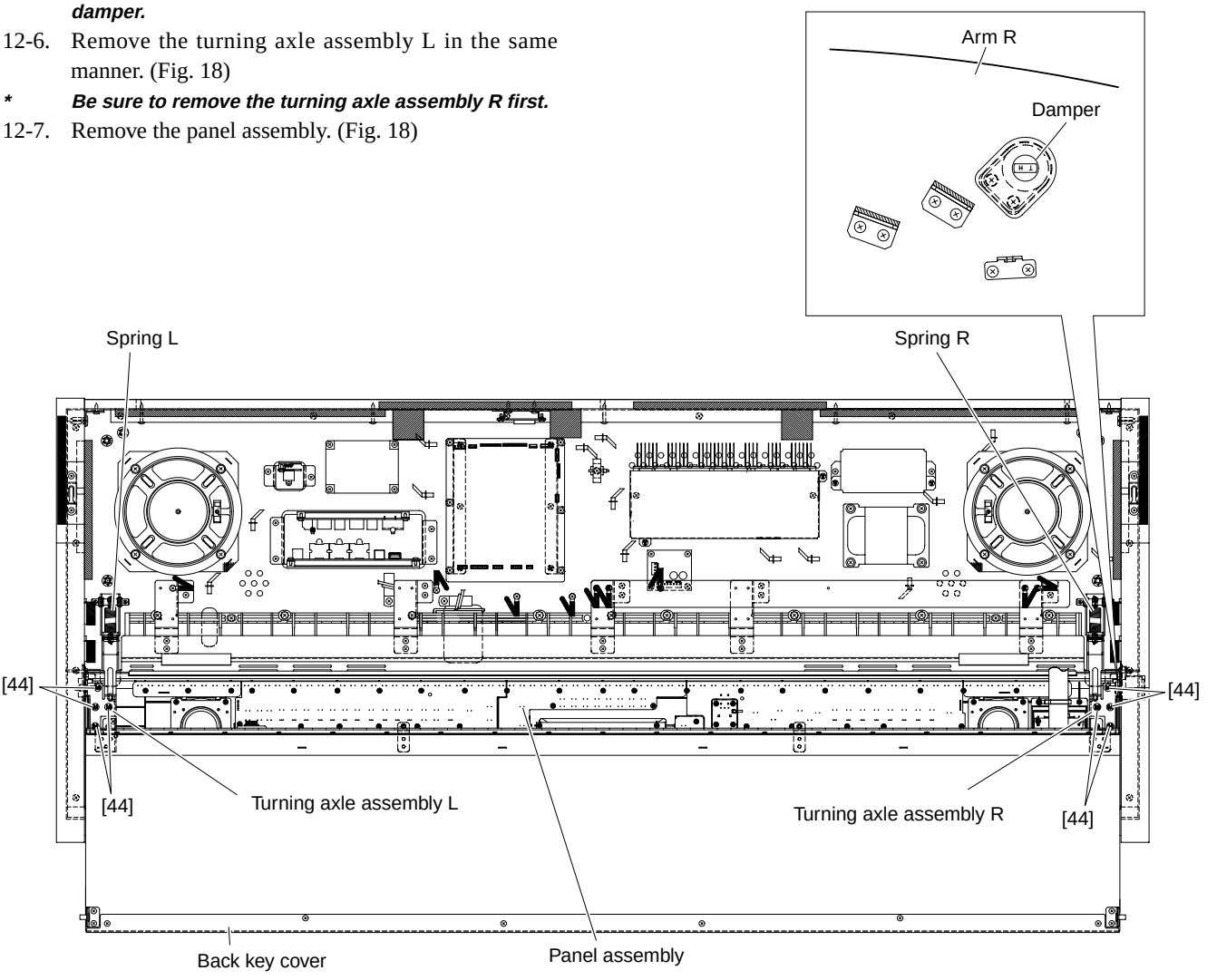

[44]: Bind Head Tapping Screw-B 3.0x10 MFZN2Y (EP600220)

(Fig. 18)

14. End Block Assembly (L, R)

(Time required : About 15 minutes)

14-1. Remove the top board assembly. (See procedure 6)
14-2. Open the back key cover. (See procedure 7-2)
14-3. Remove the key cover and panel assembly. (See procedure 13)
14-4. Remove the screw marked [41]. The end block assembly can then be removed. (Fig. 19)

* ***The left and right end block assembly can then be removed in the same manner.***

15. Keyboard Assembly

(Time required : About 20 minutes)

15-1. Remove the top board assembly. (See procedure 6)
15-2. Open the back key cover. (See procedure 7-2)
15-3. Remove the key cover and panel assembly. (See procedure 13)
15-4. Remove the end block assembly L and R. (See procedure 14)
15-5. Remove the wire rail. (See procedure 7-3)
15-6. Remove the MT angle assembly and angle. (See procedure 9-4)
15-7. Remove the keyboard assembly. (See procedure 9-5)

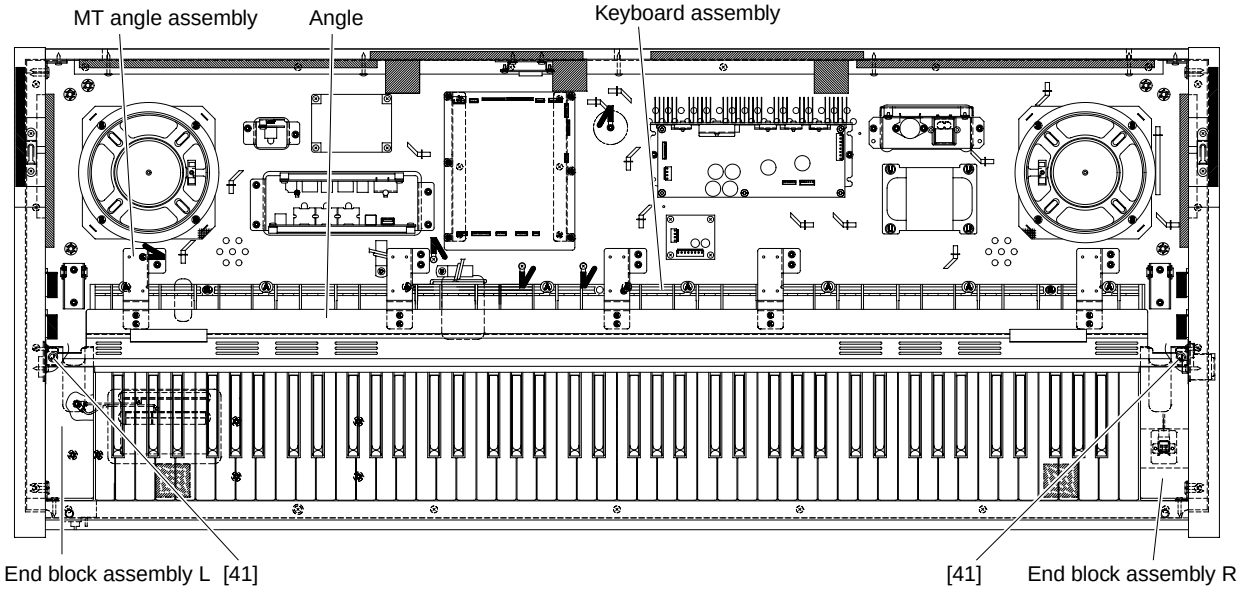

[41]: Bind Head Tapping Screw-B 4.0x20 MFZN2BL (VS205900)

(Fig. 19)

16. Power Switch Assembly

(Time required : About 20 minutes each)

16-1. Remove the top board assembly. (See procedure 6)
16-2. Open the key cover assembly (See procedure 7-2)
16-3. Remove the key cover and panel assembly. (See procedure 13)
16-4. Remove the end block assembly R. (See procedure 14)
16-5. Remove the two (2) screws marked [8]. The power switch assembly can then be removed from the end block assembly R. (Fig. 20)
16-6. Remove the two (2) screws marked [6C]. The power switch assembly can then be removed from the angle. (Fig. 20)

● **End Block Assembly R**

<Side view>

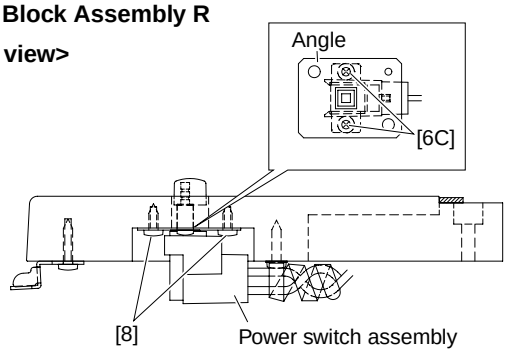

[6C]: Bind Head Tapping Screw-B 3.0x6 MFZN2BL (EP600230)
[8]: Bind Head Tapping Screw-1 3.5x10 MFZN2BL (EP030320)

(Fig. 20)

17. PL Circuit Board

(Time required : About 25 minutes)

17-1. Remove the top board assembly. (See procedure 6)
17-2. Open the back key cover. (See procedure 7-2)
17-3. Remove the key cover and panel assembly. (See procedure 13)
17-4. Remove the end block assembly L and R. (See procedure 14)
17-5. Remove the keyboard assembly. (See procedure 15)
17-6. Remove the screw marked [6D]. The PL circuit board can then be removed. (Fig. 21)

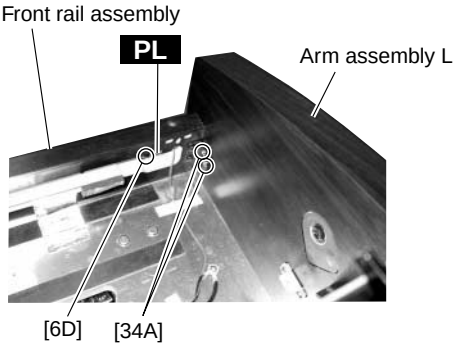

[6D]: Bind Head Tapping Screw-1 3.5x12 MFZN2BL (EP030340)
[34A]: Bind Head Tapping Screw-1 3.5x16 MFZN2Y (EP030190)
(Fig. 21)

18. Front Rail Assembly

(Time required : About 25 minutes)

18-1. Remove the FDD unit. (See procedure 3) (U, E, B models only)
18-2. Remove the top board assembly. (See procedure 6)
18-3. Open the back key cover. (See procedure 7-2)
18-4. Remove the key cover and panel assembly. (See procedure 13)
18-5. Remove the end block assembly L and R. (See procedure 14)
18-6. Remove the keyboard assembly. (See procedure 15)
18-7. Remove the two (2) screws marked [34A] from both sides of the assembly. (Fig. 21)
18-8. Remove the seven (7) screws marked [33A]. The front rail assembly can then be removed. (Fig. 23)

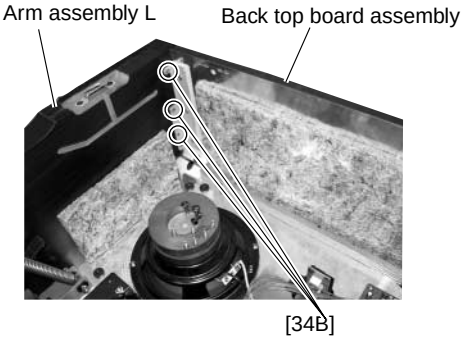

[34B]: Bind Head Tapping Screw-1 3.5x16 MFZN2Y (EP030190)
(Fig. 22)

19. Back Top Board Assembly

(Time required : About 10 minutes)

19-1. Remove the top board assembly. (See procedure 6)
19-2. Open the back key cover. (See procedure 7-2)
19-3. Remove the three (3) screws marked [34B] from both sides of the assembly. (Fig. 22)
19-4. Remove the six (6) screws marked [33B]. The back top board assembly can then be removed. (Fig. 23)

<Bottom view>

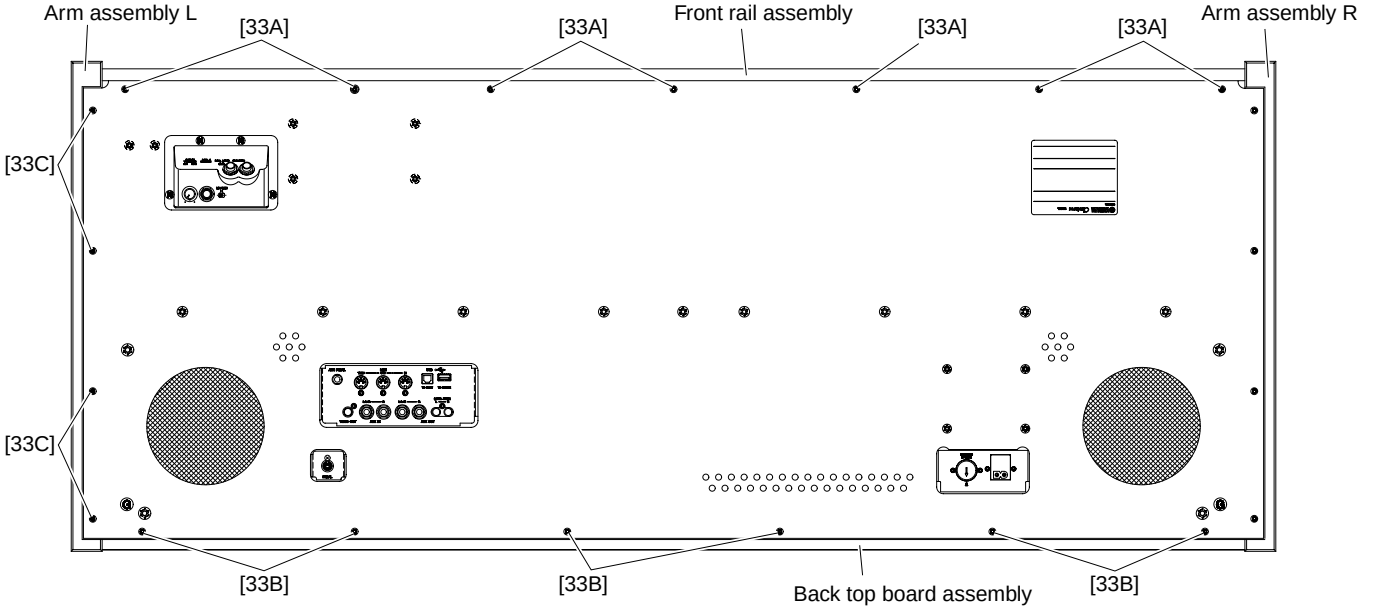

[33]: Truss Head Tapping Screw-1 3.5x25 MFZN2BL (EN630190)

(Fig. 23)

20. Main Unit (Time required : About 15 minutes)

20-1. Disconnect the AC cord and the PK-LF cable. (Fig. 5-1)
20-2. Remove the headphone hanger. (See procedure 1)
20-3. Remove the mic. and phones unit. (See procedure 2)
20-4. Remove the FDD unit. (See procedure 3) (U, E, B models only)
20-5. Spread a soft cloth like a blanket on the floor where the main unit is to be placed in advance.
20-6. Remove the four (4) screws marked [13a]. (Fig. 24)
20-7. Move the main unit rearward, lift it and place it on the cloth gently.

* ***For safety, this work should be done by two persons.***
* ***When removing the main unit from the stand, use care not to have your finger caught.***

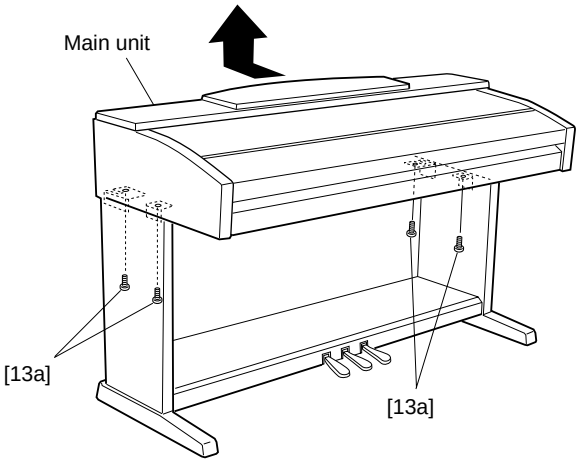

[13a]: Bind Head Screw 6.0x16 MFZN2BL (EG360020)

(Fig. 24)

21. Arm Assembly (L, R)

(Time required : About 40 minutes)

21-1. Remove the top board assembly. (See procedure 6)
21-2. Open the back key cover. (See procedure 7-2)
21-3. Remove the key cover and panel assembly. (See procedure 13)
21-4. Remove the end block assembly L and R. (See procedure 14)
21-5. Remove the keyboard assembly. (See procedure 15)
21-6. Remove the main unit. (See procedure 20)
21-7. Remove the two (2) screws marked [34A], the three (3) screws marked [34B] and the four (4) screws marked [33C]. The arm assembly L can then be removed. (Fig. 21, 22, 23)

* ***The arm assembly R can then be removed in the same manner.***

22. Side Board Assembly (L, R)

(Time required : About 15 minutes)

22-1. Remove the main unit. (See procedure 20)
22-2. Remove the screw marked [13b] and the two (2) screws marked [13c]. The side board assembly R can then be removed. (Fig. 25)

* ***The side board assembly L can then be removed in the same manner.***

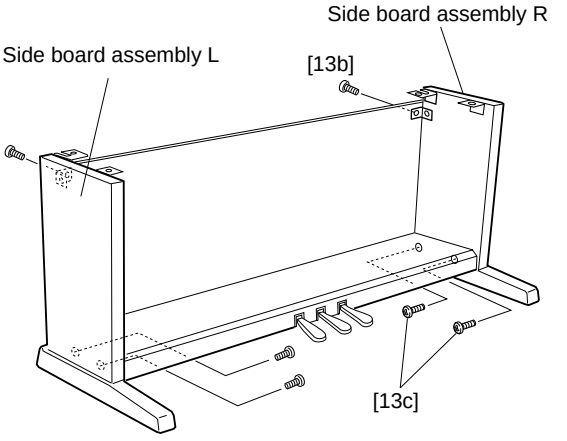

CVP-303/CVP-303M

[13b]: Truss Head Screw 4.0x12 MFZN2BL (VP367300)
[13c]: Truss Head Screw 6.0x25 MFZN2BL (VQ448400)

CVP-303C

[13b]: Truss Head Screw 4.0x12 MFC2BR (V6135000)
[13c]: Truss Head Screw 6.0x25 MFZN2BL (VQ448400)

(Fig. 25)

23. Stand Base (L, R)

(Time required : About 10 minutes)

23-1. With a soft cloth like a blanket placed on the floor, place the main unit on its back board gently.

* ***For safety, this work should be done by two persons.***

23-2. Put thick books or the like under the main unit at both sides.
23-3. Remove the three (3) screws marked [7C]. The stand base L can then be removed. (Fig. 26)

* ***The stand base R can then be removed in the same manner.***

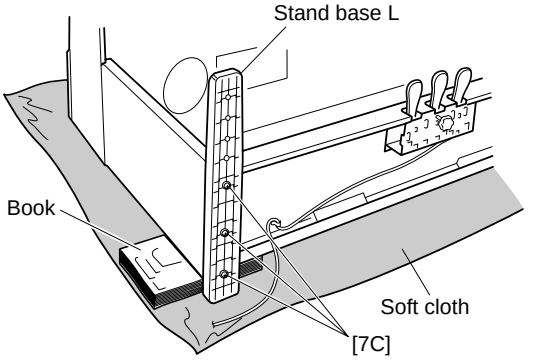

[7C]: Pan Head Tapping Screw-1 4.0x65 MFZN2Y (VV444000)

(Fig. 26)

24. Pedal Box Assembly, Pedal Assembly

(Time required : About 15 minutes)

24-1. Disconnect the PK-LF cable. (Fig. 5-1)

24-2. Remove the back board assembly. (See procedure 5)

24-3. With a soft cloth like a blanket placed on the floor, place the main unit on its back board gently.

* ***For safety, this work should be done by two persons.***

24-4. Remove the four (4) screws marked [13c]. The pedal box assembly can then be removed. (Fig. 27)

24-5. Remove the eight (8) screws marked [6E] and the screw marked [7D]. The pedal assembly can then be removed. (Fig. 28)

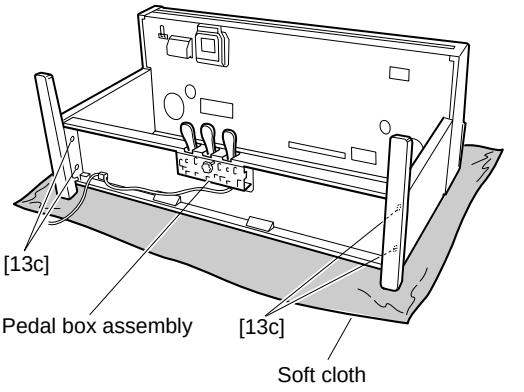

[13c]: Truss Head Screw 6.0x25 MFZN2BL (VQ448400)
(Fig. 27)

● **Pedal Box Assembly**

<Bottom view>

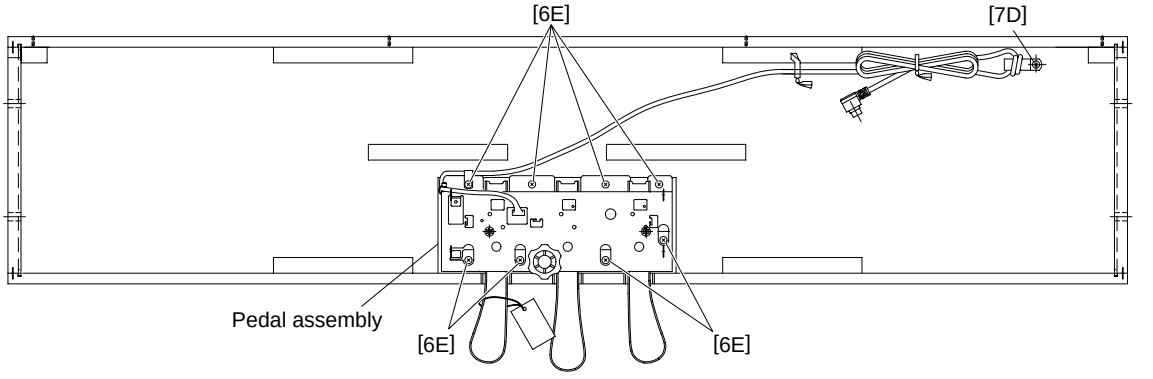

[6E]: Bind Head Tapping Screw-1 4.0x14 MFZN2Y (EP040230)
[7D]: Truss Head Tapping Screw-1 4.0x12 MFZN2BL (03747270)
(Fig. 28)

25. Disassembling the Keyboard

* ***After inserting a round stick (Rod: TX000670) between the frame and the keys, remove the circuit boards. (Fig. 29)***

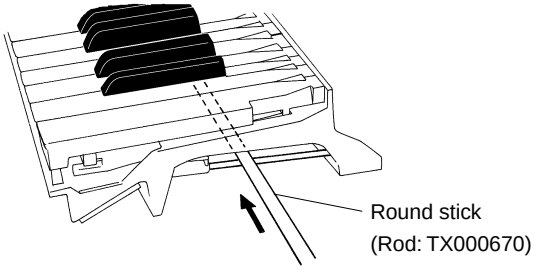

(Fig. 29)

25-1. **GHD EBUS L, MK SUB Circuit Board**
Remove the seven (7) screws marked [260A]. The GHD EBUS L and MK SUB circuit boards can then be removed. (Fig. 30, 30-1)

25-2. **GHD M Circuit Board**
Remove the five (5) screws marked [260B] and the screw marked [262]. The GHD M circuit board can then be removed. (Fig. 30)

25-3. **GHD H Circuit Board**
Remove the four (4) screws marked [260C] and the screw marked [262]. The GHD H circuit board can then be removed. (Fig. 30)

* ***Keys can be removed without removing the circuit boards.***
* ***After removing the GHD EBUS L, GHD M and GHD H circuit boards, and the rubbers can then be removed.***

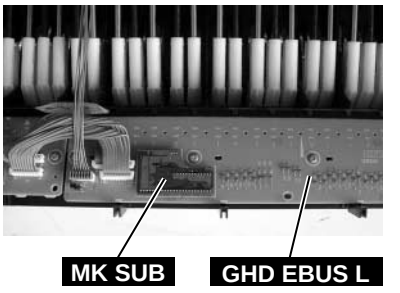

(Fig. 30-1)

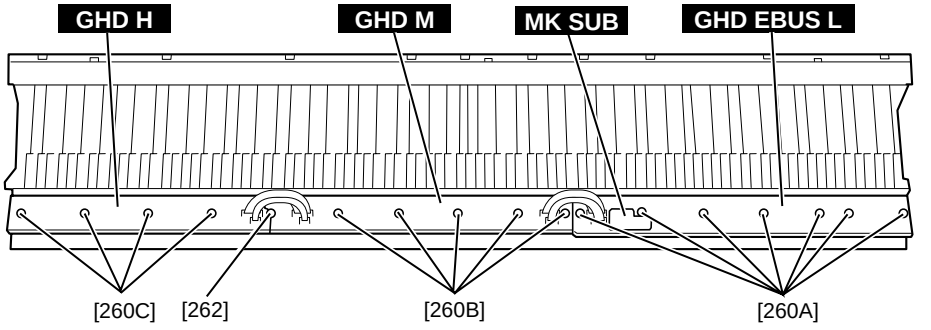

[260]: Bind Head Tapping Screw-P 3.0x10 MFZN2Y (EP600270) or
Bind Head Tapping Screw-P 3.0x10 MFZN2 (VT413400)
[262]: PW Head Tapping Screw-P 3.0x10-10 ZMC2Y (V8833200)

(Fig. 30)

25-4. **Rubber contact**
Remove the GHD circuit board for the involved key. The rubber contacts can then be removed. (Fig. 31, 32)

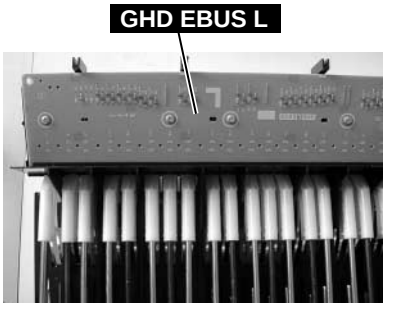

(Fig. 31)

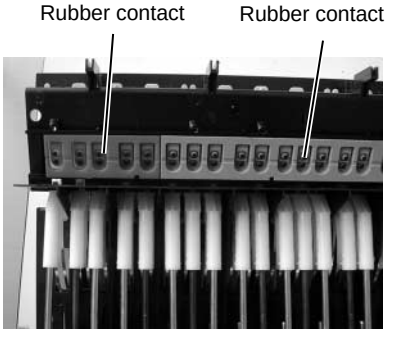

(Fig. 32)

25-5. **White Key (Black Key)**
See procedure 9-6

25-6. **Hammer, White Key**

After a key has been removed, push a key spring down once to take it out of the hook. (Fig. 33)

Place the keyboard assembly upside-down and peel the stopper away. The hammer of the white key can then be removed. (Fig. 34)

* ***The hammer of the black key can then be removed in the same manner.***

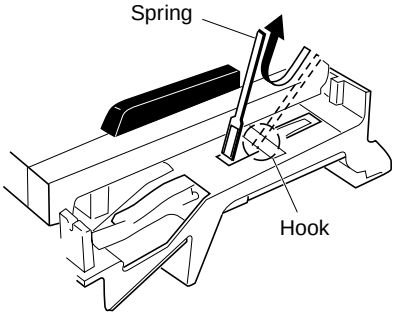

(Fig. 33)

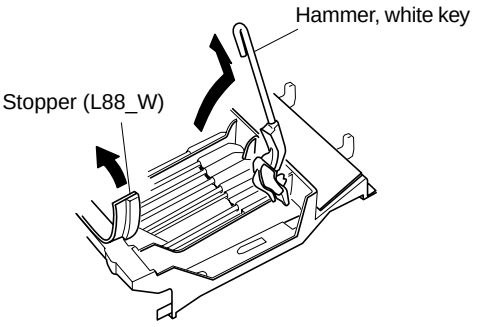

(Fig. 34)

26. Assembling the Keyboard

26-1. **Hammer, White Key (Hammer, Black Key)**

Place the keyboard assembly upside-down, insert a hammer assembly into the frame, and put the stopper (L88_W) on. (Fig. 35)

* ***There are four (4) kinds of hammers that differ in weight.***

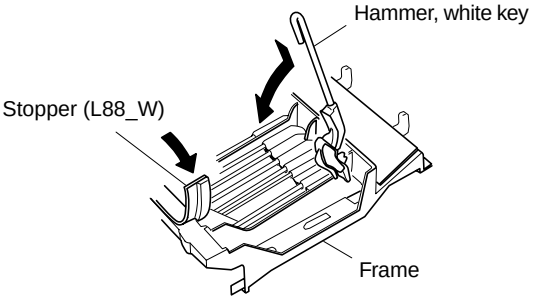

(Fig. 35)

26-2. **Spring**

Place the keyboard assembly rightside up. Fix key springs on the frame by setting one at each slit and pushing down once on each key spring. (Fig. 36)

* ***Be careful of the direction of the spring.***

26-3. **White Key (Black Key)**

See procedure 9-9

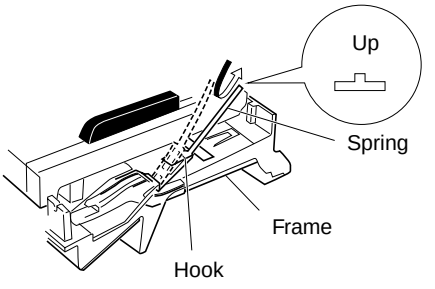

(Fig. 36)

26-4. **GHD EBUS L, MK SUB Circuit Board**

Tighten the seven (7) screws marked [260A] to fix the GHD EBUS L, MK SUB circuit boards. (Fig. 30)

26-5. **GHD M Circuit Board**

Tighten the five (5) screws marked [260B] and the screw marked [262] to fix the GHD M circuit board. (Fig. 30)

26-6. **GHD H Circuit Board**

Tighten the four (4) screws marked [260C] and the screw marked [262] to fix the GHD H circuit board. (Fig. 30)

* ***When installing the circuit boards, set it under hooks to align the triangle marks of the circuit board and projection parts of the frame as shown in figure 37.***

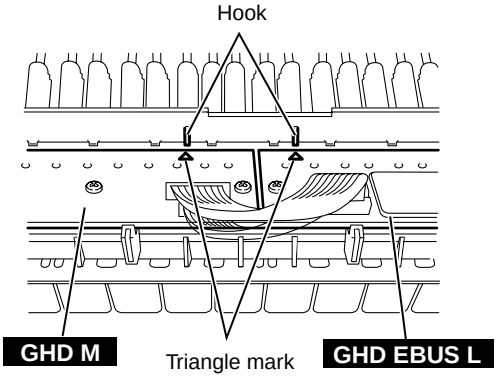

(Fig. 37)

■ LSI PIN DESCRIPTION

AK4393VF-E2 (XW092A00) **DAC** (Digital to Analog Converter) 22
AK5381VT-E2 (X5219A00) **DAC** (Digital to Analog Converter) 22
HD6417727F160C (X2890B00) **CPU** 23
T8F02TB-0102 (X0060A00) **SWP50** (Tone Generator) 24/25
M38044M4-C16FP (X4406100) **LED DRIVER/SWITCH SCAN** 26
μ**PD780031AYGK-N04** (X0031200) **LKS** 26
MPD6S004S (X4404A00) **DC-DC CONVERTER** 27

● **AK4393VF-E2** (XW029A00) **DAC** (Digital to Analog Converter)

DAC1A: IC301

PIN NO.	NAME	I/O	FUNCTION	PIN NO.	NAME	I/O	FUNCTION
1	DVSS	-	Digital ground	15	BVSS	-	Substrate ground
2	DVDD	-	Digital power supply	16	VREFL	I	Low level voltage reference
3	MCLK	I	Master clock	17	VREFH	I	High level voltage reference
4	/PD	I	Power down mode	18	AVDD	-	Analog power supply +5 V
5	BICK	I	Audio serial data clock	19	AVSS	-	Analog ground
6	SDATA	I	Audio serial data input	20	AOUTR-	O	Rch negative analog output
7	LRCK	I	L/R clock	21	AOUTR+	O	Rch positive analog output
8	SMUTE//CS	I	Soft mute	22	AOUTL-	O	Lch negative analog output
9	DFS	I	Double speed sampling mode	23	AOUTL+	O	Lch positive analog output
10	DEM0/CCLK	I	De-emphasis enable	24	VCOM	O	Common voltage output
11	DEM1/CDTI	I		25	P//S	I	Parallel/serial select
12	DIF0	I	Digital input format	26	CKS0	I	Master clock select
13	DIF1	I		27	CKS1	I	
14	DIF2	I		28	CKS2	I	

● **AK5381VT-E2** (X5219A00) **DAC** (Digital to Analog Converter)

DAC1A: IC401

PIN NO.	NAME	I/O	FUNCTION	PIN NO.	NAME	I/O	FUNCTION
1	AINR	I	Rch Analog input pin	9	SDTO	O	Audio serial data output pin
2	AINL	I	Lch Analog input pin	10	LRCK	I/O	Output channnel clock pin
3	CKS1	I	Mode select 1 pin	11	MCLK	I	Master clock input pin
4	VCOM	O	Common voltage output pin	12	SCLK	I/O	Audio serial data clock pin
5	AGND	-	Analog ground	13	PDN	I	Power down mode pin
6	VA	-	Analog power supply	14	DIF	I	Audio interface format pin
7	VD	-	Digital power supply	15	CKS2	I	Mode select 2 pin
8	DGND	-	Digital ground	16	CKS0	I	Mode select 0 pin

● HD6417727F160C (X2890B00) CPU

DM: IC007

PIN NO.	NAME	I/O	FUNCTION
1	Vcc-RTC	-	Power supply for RTC (1.9V)
2	XTAL2	-	Not in use (XTAL for internal RTC)
3	EXTAL2	-	
4	Vss-RTC	-	Power supply for RTC (0V)
5	MD1	-	Clock mode setting
6	MD2	-	
7	NMI	-	Not in use (Non-maskable interrupt request)
8	IRQ0/IRL0_/PTH[0]	I	External interrupt request
9	IRQ1/IRL1_/PTH[1]	I	
10	IRQ2/IRL2_/PTH[2]	I	
11	IRQ3/IRL3_/PTH[3]	I	
12	IRQ4/PTH[4]	I	
13	VEPWC	O	VEE control pin for LCD panel
14	VCPWC	-	VCC control pin for LCD panel
15	MD5	-	Big endian setting
16	/BREQ	-	Not in use (bus request)
17	/BACK	-	Bus acknowledge
18	VssQ	-	VssQ
19	CKIO2	-	System clock output
20	VccQ	-	VccQ
21	D31/PTB[7]	I/O	Data bus
22	D30/PTB[6]	I/O	
23	D29/PTB[5]	I/O	
24	D28/PTB[4]	I/O	
25	D27/PTB[3]	I/O	
26	D26/PTB[2]	I/O	
27	D25/PTB[1]	I/O	
28	D24/PTB[0]	I/O	
29	VssQ	-	VssQ
30	D23/PTA[7]	I/O	Data bus
31	VccQ	-	VccQ
32	D22/PTA[6]	I/O	Data bus
33	D21/PTA[5]	I/O	
34	D20/PTA[4]	I/O	
35	Vss	-	Vss
36	D19/PTA[3]	I/O	Data bus
37	Vcc	-	Vcc
38	D18/PTA[2]	I/O	Data bus
39	D17/PTA[1]	I/O	
40	D16/PTA[0]	I/O	
41	D15	-	Data bus
42	VssQ	-	VssQ
43	D14	-	Data bus
44	VccQ	-	VccQ
45	D13	-	Data bus
46	D12	-	
47	D11	-	
48	D10	-	
49	D9	-	
50	D8	-	
51	D7	-	
52	D6	-	
53	VssQ	-	VssQ
54	D5	-	Data bus
55	VccQ	-	VccQ
56	D4	-	Data bus
57	D3	-	
58	D2	-	
59	D1	-	
60	D0	-	
61	A0	-	Address bus
62	A1	-	
63	A2	-	
64	VssQ	-	VssQ
65	A3	-	Address bus
66	VccQ	-	VccQ
67	A4	-	Address bus
68	A5	-	
69	A6	-	
70	A7	-	
71	A8	-	
72	A9	-	
73	A10	-	
74	A11	-	
75	VssQ	-	VssQ
76	A12	-	Address bus
77	VccQ	-	VccQ
78	A13	-	Address bus
79	A14	-	
80	A15	-	
81	A16	-	
82	A17	-	
83	A18	-	
84	A19	-	
85	A20	-	
86	VssQ	-	VssQ
87	A21	-	Address bus
88	VccQ	-	VccQ
89	A22	-	Address bus
90	A23	-	
91	Vss	-	Vss
92	A24	-	Address bus
93	Vcc	-	Vcc
94	A25	-	Address bus
95	BS_/PTK[4]	O	Not connected (bus cycle start signal)
96	RD_	-	Read strobe
97	WE0_/DQMLL	O	Write 0 signal
98	WE1_/DQMLU/WE	O	Write 1 signal
99	WE2_/DQMUL/ICIORD_/PTK[6]	O	Write 2 signal
100	VssQ	-	VssQ
101	WE3_/DQMUU/ICIOWR_/PTK{7}	O	Write 3 signal
102	VccQ	-	VccQ
103	RD/WR_	O	Read/Write
104	PTE[7]/PCC0RDY/AUDSYNC_	O	I/O
105	/CS0	-	Chip Select 0
106	/CS2	-	Chip Select 2
107	/CS3	-	Chip Select 3
108	/CS4/PTK[2]	O	Chip Select 4
109	/CS5/CE1A_/PTK{3}	O	Chip Select 5
110	/CS6/CE1B_	O	Chip Select 6
111	CE2A_/PTE[4]	O	Output port (SWP50 Reset)
112	CE2B_/PTE[5]	O	Output port (PLG Board Reset)
113	AFE_HC1/USB1d_DPLS/PTK[0]	O	SPD DATA
114	AFE_RLYCNT_/USB1d_DMNS/PTK[1]	O	SPD CL
115	VssQ	-	VssQ
116	AFE_SCLK/USB1d_TXDPLS	I	Not in use (USB1 D+ transmission)
117	VccQ	-	VccQ
118	PTM[7]/PTINT[7]/AFE_FS/USB1d_RCV	I	Not in use
119	PTM[6]/PTINT[6]/AFE_RXIN/USB1d_SPEED	I	
120	PTM[5]/PTINT[5]/AFE_TXOUT/USB1d_TXSE0	I	
121	PTM[4]/PINT[4]/AFE_RDET_/USB1d_TXDMNS	I	Not in use
122	Reserved/USB1d_SUSPEND	O	
123	USB1_ovr_crnt/USBF_VBUS	I	USB function VBUS
124	USB2_ovr_crnt_	-	USB2_HOST2 over current detection
125	RTS2_/USB1d_TXENL	O	Not in use
126	PTE[2]/USB1_pwr_en	O	USB1 voltage control
127	PTE[1]/USB2_pwr_en	O	USB2 voltage control
128	CKE/PTK[5]	O	Enable (SDRAM)
129	/RAS3/PTJ[0]	O	RAS for SDRAM
130	Reserved/PTJ[1]	O	Not in use
131	Reserved//CAS/PTJ[2]	O	CAS for SDRAM
132	VssQ	-	VssQ
133	Reserved/PTJ[3]	O	Output port (DAC Reset)
134	VccQ	-	VccQ
135	Reserved/PTJ[4]	O	Output port (SIO Reset)
136	Reserved/PTJ[5]	O	Output port (DAC Mute)
137	Vss	-	Vss
138	PTD[5]/CL1	O	LCD line clock
139	Vcc	-	Vcc
140	PTD[7]/DON	O	LCD DISPLAY ON
141	PTE[6]/M_DISP	O	LCD alternater
142	PTE[3]/FLM	O	LCD frame line marker
143	PTE[0]/TDO	O	JTAG (test data output)
144	PCC0RESET/DRACK0	O	DMA request acceptance
145	PCC0DRV_/DACK0_	O	DMA acknowledge
146	/WAIT	-	Hardware wait request
147	/RESETM	-	Manual reset request
148	/ADTRG/PTH[5]	I	Analog A/D trigger
149	/IOIS16/PTG[7]	I	Not in use
150	/ASEMD0	-	
151	PTG[5]/ASEBRKAK_	-	
152	PTG[4]	I	
153	PCC0BVD2/PTG[3]/AUDATA[3]	I	
154	PCC0BVD1/PTG[2]/AUDATA[2]	I	
155	Vss	-	Vss
156	PCC0CD2/PTG[1]/AUDATA[1]	I	Not in use
157	Vcc	-	Vcc
158	PCC0CD1/PTG[0]/AUDATA[0]	I	Not in use
159	VssQ	-	VssQ
160	PTF[7]/PINT[15]/TRST_	I	Not in use
161	VccQ	-	VccQ
162	PTF[6]/PINT[14]/TMS	I	Not in use
163	PTF[5]/PINT[13]/TDI	I	
164	PTF[4]/PINT[12]/TCK	I	
165	PTF[3]/PINT[11]/Reserved	I	
166	PCCREG_/PTF[2]/Reserved	I	
167	PCC0VS1_/PTF[1]/Reserved	I	
168	PCC0VS2_/PTF[0]/Reserved	I	
169	MD0	-	Clock mode setting
170	Vcc-PLL1	-	Power supply for Vcc_PLL1 - PLL1(1.9V)
171	CAP1	-	External capacitance for CAP1 _ PLL1
172	Vss-PLL1	-	Power supply for Vss_PLL1 _ PLL1(0V)
173	Vss-PLL2	-	Power supply for Vss_PLL2 _ PLL2 (0V)
174	CAP2	-	External capacitance for CAP2 _ PLL2
175	Vcc-PLL2	-	Power supply for Vcc_PLL2 _ PLL2 (1.9V)
176	PCC0WAIT_/PTH[6]/AUDCK	I	Not in use
177	Vss	-	Vss
178	Vcc	-	Vcc
179	XTAL	-	Clock oscillator
180	EXTAL	-	External clock
181	LCD15/PTM[3]/PINT[10]	I	Not in use
182	LCD14/PTM[2]/PINT[9]	I	
183	LCD13/PTM[1]/PINT[8]	I	
184	LCD12/PTM[0]	I	Input port (Flash ROM RY/BY)
185	STATUS0/PTJ[6]	O	Output port (Flash ROM write protect)
186	STATUS1/PTJ[7]	O	Output port (Flash ROM ACC)
187	CL2/PTH[7]	O	LCD clock output
188	VssQ	-	VssQ
189	CKIO	-	System clock input/output (for SDRAM)
190	VccQ	-	VccQ
191	TxD0/SCPT[0]	O	Output port for SCI
192	SCK0/SCPT[1]	O	Not in use
193	TxD_SIO/SCPT[2]	O	
194	SIOMCLK/SCPT[3]	O	
195	TxD2/SCPT[4]	O	Output port for SCI
196	SCK_SIO/SCPT[5]	O	Not in use
197	SIOFSYNC/SCPT[6]	O	
198	RxD0/SCPT[0]	i	Receiving data 0
199	RxD_SIO/SCPT[2]	i	Not in use
200	Vss	-	Vss
201	RxD2/SCPT[4]	i	Receiving data 2
202	Vcc	-	Vcc
203	SCPT[7]/CTS2_/IRQ5	I	Not in use
204	LCD11/PTC[7]/PINT[3]	O	Output port (PLG CLOCK ON/OFF)
205	LCD10/PTC[6]/PINT[2]	O	Not in use
206	LCD9/PTC[5]/PINT[1]	O	
207	VssQ	-	VssQ
208	LCD8/PTC[4]/PINT[0]	O	Not in use
209	VccQ	-	VccQ
210	LCD7/PTD[3]	O	LCD DATA7
211	LCD6/PTD[2]	O	LCD DATA6
212	LCD5/PTC[3]	O	LCD DATA5
213	LCD4/PTC[2]	O	LCD DATA4
214	LCD3/PTC[1]	O	LCD DATA3
215	LCD2/PTC[0]	O	LCD DATA2
216	LCD1/PTD[1]	O	LCD DATA1
217	LCD0/PTD[0]	O	LCD DATA0
218	DREQ0_/PTD[4]	I	DMA request
219	LCK/UCLK/PTD[6]	I	USB clock
220	/RESETP	-	Power on reset request
221	CA	-	Hardware standby request
222	MD3	-	Bus width setting for area0
223	MD4	-	
224	/Scan_testen	-	Test pin (fixed to 3.3V)
225	Avcc_USB	-	USB analog power supply (3.3V)
226	USB1_P	IO	USB1 data input/output (+)
227	USB1_M	IO	USB1 data input/output (-)
228	Avss_USB	-	USB analog power supply (0V)
229	USB2_P	IO	USB2 data input/output (+)
230	USB2_M	IO	USB2 data input/output (-)
231	Avcc_USB	-	USB analog power supply (3.3V)
232	Avss	-	A/D analog power supply (0V)
233	AN[2]/PTL[2]	I	AD converter input
234	AN[3]/PTL[3]	I	
235	AN[4]/PTL[4]	I	
236	AN[5]/PTL[5]	I	
237	Avcc	-	A/D analog power supply (3.3V)
238	AN[6]/PTL[6]/DA[1]	I	AD converter input
239	AN[7]/PTL[7]/DA[0]	O	DA converter output (LCD contrast)
240	Avss	-	A/D analog power supply (0V)

● **T8F02TB-0102** (X0060A00) **SWP50** (Tone Generator)

DM: IC035

PIN NO.	OUTER NO.	NAME	I/O	FUNCTION	PIN NO.	OUTER NO.	NAME	I/O	FUNCTION
1	E5	VSS2	-	Ground	106	E22	VSS2	-	Ground
2	D4	VDDC	-	Power supply +1.5 V	107	D23	VDDC	-	Power supply +1.5 V
3	C3	CD15	I/O	Data bus of internal register	108	C24	HMA15	O	Wave memory address bus
4	B2	CD13	I/O		109	B25	HMA16	O	
5	A1	CD14	I/O		110	A26	HMA22	O	
6	D5	CD6	I/O		111	E23	HMA25	O	
7	E6	CD2	I/O		112	F22	VDDS	-	Power supply +3 V
8	C4	CD9	I/O		113	D24	HMA27	O	Wave memory address bus
9	B3	CD11	I/O		114	C25	HMA0	O	
10	A2	CD12	I/O		115	B26	HMA23	O	
11	A3	CD10	I/O		116	C26	HMA24	O	
12	D6	CD1	I/O		117	F23	VDDS	-	Power supply +3 V
13	E7	VSS	-	Ground	118	G22	HMA26	O	Wave memory address bus
14	C5	CD5	I/O	Data bus of internal register	119	E24	HMA30	O	
15	B4	CD8	I/O		120	D25	HMA28	O	
16	A4	CD7	I/O		121	D26	HMA29	O	
17	D7	VSS2	-	Ground	122	G23	LMA17	O	Wave memory address bus (Lower data memory)
18	C6	CD0	I/O	Data bus of internal register	123	F24	LMA19	O	
19	E8	VSS	-	Ground	124	H22	VSS	-	Ground
20	D8	VDDS	-	Power supply +3 V	125	H23	VDDS	-	Power supply +3 V
21	B5	CD4	I/O	Data bus of internal register	126	E25	LMA20	O	Wave memory address bus (Lower data memory)
22	A5	CD3	I/O		127	E26	LMA21	O	
23	C7	CA2	I	Address bus of internal regisuter	128	G24	LMA9	O	
24	B6	CA0	I		129	F25	LMA18	O	
25	E9	CA8	I		130	J22	LMA12	O	
26	D9	CA9	I		131	J23	LMA4	O	
27	C8	CA5	I		132	H24	LMA6	O	
28	A6	CA1	I		133	F26	LMA8	O	
29	B7	CA3	I		134	G25	LMA7	O	
30	A7	CA4	I		135	G26	LMA10	O	
31	E10	VSS2	-	Ground	136	K22	VSS2	-	Ground
32	D10	VDDC	-	Power supply +1.5 V	137	K23	VDDC	-	Power supply +1.5 V
33	C9	CA10	I	Address bus of internal regisuter	138	J24	LMA13	O	Wave memory address bus (Lower data memory)
34	B8	CA6	I		139	H25	LMA11	O	
35	A8	CA7	I		140	H26	LMA5	O	
36	B9	CA11	I		141	J25	LMA3	O	
37	E11	CA14	I		142	L22	LMA16	O	
38	D11	CA15	I		143	L23	LMA0	O	
39	C10	CA13	I		144	K24	LMA2	O	
40	A9	CA12	I		145	J26	LMA14	O	
41	B10	CSN0	I	Chip select	146	K25	LMA15	O	
42	A10	CSN1	I		147	K26	LMA1	O	
43	E12	VSS	-	Ground	148	M22	VSS	-	Ground
44	D12	VDDS	-	Power supply +3 V	149	M23	VDDS	-	Power supply +3 V
45	C11	WRN	I	Write strobe	150	L24	LMA22	O	Wave memory address bus (Lower data memory)
46	B11	RDN	I	Read strobe	151	L25	LMA23	O	
47	A11	WAIT0	O	Hardware wait request	152	L26	LMA24	O	
48	C12	IRQ0	O	Interrupt request	153	M24	LMA27	O	
49	B12	DREQ0	O		154	M25	LMA28	O	
50	E13	TCK	I	Test pin	155	N22	LMA25	O	
51	D13	TRST	I		156	N23	LMA26	O	
52	C13	VSS	-	Ground	157	N24	LMA30	O	
53	A12	XO	O	Crystal osc. output	158	M26	LMA29	O	
54	B13	XI	I	Crystal osc. input	159	N25	MOEN	O	Wave memory output enable
55	A13	VDDS	-	Power supply +3 V	160	N26	MWEN	O	Wave memory write enable
56	A14	SLAVE	I	Master/Slave select	161	P26	LMD15	I/O	Wave memory data bus (Lower 16 bit)
57	E14	TMS	I	Test pin	162	P22	VSS	-	Ground
58	D14	TDO	O		163	P23	VDDS	-	Power supply +3 V
59	C14	ICN	I	Initial clear	164	P24	LMD13	I/O	Wave memory data bus (Lower 16 bit)
60	B14	RFCLK0	O	PLL Clock	165	P25	LMD14	I/O	
61	B15	PLL_TSTN	I	Power supply	166	R25	LMD11	I/O	
62	C15	PLL_BP	I		167	R24	LMD10	I/O	
63	D15	VDDS	-	Power supply +3 V	168	R23	VDDS	-	Power supply +3 V
64	E15	VSS	-	Ground	169	R22	VSS	-	Ground
65	A15	RFCLK1	I	PLL Clock	170	R26	LMD12	I/O	Wave memory data bus (Lower 16 bit)
66	A16	VDDC	-	Power supply +1.5 V	171	T26	LMD9	I/O	
67	B16	TMODE	I	Test pin	172	T25	LMD8	I/O	
68	C16	PLL_AVD	-	Power supply (PLL)	173	T24	LMD7	I/O	
69	D16	NC	-	Not used	174	T23	VSS2	-	Ground
70	E16	NC	-	Not used	175	T22	VSS	-	Ground
71	A17	PLL_AVS	-	Power supply (PLL)	176	U26	LMD6	I/O	Wave memory data bus (Lower 16 bit)
72	B17	TEST1	I	Test pin	177	U25	LMD5	I/O	
73	A18	VSS	-	Ground	178	V26	LMD3	I/O	
74	C17	SY1	I	Sync. clock	179	U24	LMD4	I/O	
75	D17	VDDC	-	Power supply +1.5 V	180	U23	VDDC	-	Power supply +3 V
76	E17	VSS2	-	Ground	181	U22	VSS2	-	Ground
77	B18	KONTRG0	O	Key on data	182	V25	LMD2	I/O	Wave memory data bus (Lower 16 bit)
78	A19	KONTRG1	I		183	W26	LMD0	I/O	
79	C18	CK512	O		184	V24	LMD1	I/O	
80	B19	CK128	O	Master clock (256 Fs)	185	W25	DCSL0	O	
81	D18	BCLK	O	Master clock (64 Fs)	186	V23	VDDS	-	Power supply +3 V
82	E18	SY0	O	Sync. clock	187	V22	VDDC	-	Power supply +1.5 V
83	C19	HMA20	O	Wave memory address bus	188	W24	DCSL1	O	
84	A20	HMA21	O		189	Y26	DQML3	O	MASK signal
85	B20	HMA19	O		190	Y25	DQML1	O	
86	C20	HMA18	O		191	Y24	DMAL14	O	Address bus (DIMM, SDRAM)
87	D19	VDDS	-	Power supply +1.5 V	192	W23	VDDS	-	Power supply +3 V
88	E19	VSS	-	Ground	193	W22	VSS	-	Ground
89	A21	HMA9	O	Wave memory address bus	194	AA26	DMAL13	O	Address bus (DIMM, SDRAM)
90	B21	HMA7	O		195	AA25	DMAL12	O	
91	A22	HMA6	O		196	AB26	DMAL9	O	
92	D20	HMA8	O		197	Y23	VSS	-	Ground
93	C21	HMA10	O		198	AA24	DMAL11	O	Address bus (DIMM, SDRAM)
94	E20	HMA17	O		199	Y22	VSS	-	Ground
95	D21	VDDS	-	Power supply +1.5 V	200	AA23	DMAL10	O	Address bus (DIMM, SDRAM)
96	B22	HMA11	O	Wave memory address bus	201	AB25	DMAL8	O	
97	A23	HMA4	O		202	AC26	DMAL6	O	
98	C22	HMA5	O		203	AB24	DMAL7	O	
99	B23	HMA13	O		204	AC25	DMAL5	O	
100	E21	VSS	-	Ground	205	AA22	VSS2	-	Ground
101	D22	HMA12	O	Wave memory address bus	206	AB23	VSS	-	Ground
102	C23	HMA3	O		207	AC24	DMAL4	O	Address bus (DIMM, SDRAM)
103	A24	HMA14	O		208	AD26	DMAL3	O	
104	B24	HMA2	O		209	AD25	DMAL2	O	
105	A25	HMA1	O		210	AE26	DMAL0	O	

PIN NO.	OUTER NO.	NAME	I/O	FUNCTION
211	AB22	VSS2	-	Ground
212	AC23	VDDC	-	Power supply +1.5 V
213	AD24	DMAL1	O	Address bus (DIMM, SDRAM)
214	AE25	DCSL2	O	
215	AF26	DRAS0	O	
216	AC22	DCAS0	O	
217	AB21	VDDS	-	Power supply +3 V
218	AD23	DCLKIN	I	
219	AE24	DQML2	O	MASK signal
220	AF25	DCSL3	O	
221	AF24	DQML0	O	MASK signal
222	AC21	VDDS	-	Power supply +3 V
223	AB20	VSS	-	Ground
224	AD22	DWEN0	O	
225	AE23	DCLK0	O	
226	AF23	DCLK1	O	
227	AC20	DCLKE	O	
228	AD21	HMD13	I/O	Wave memory data bus (Upper data memory)
229	AB19	VSS	-	Ground
230	AC19	VDDS	-	Power supply +3 V
231	AE22	HMD15	I/O	Wave memory data bus (Upper data memory)
232	AF22	HMD14	I/O	
233	AD20	HMD10	I/O	
234	AE21	HMD12	I/O	
235	AB18	VDDC	-	Power supply +1.5 V
236	AC18	VDDS	-	Power supply +3 V
237	AD19	HMD7	I/O	Wave memory data bus (Upper data memory)
238	AF21	HMD11	I/O	
239	AE20	HMD9	I/O	
240	AF20	HMD8	I/O	
241	AB17	VSS2	-	Ground
242	AC17	VDDC	-	Power supply +1.5 V
243	AD18	HMD4	I/O	Wave memory data bus (Upper data memory)
244	AE19	HMD6	I/O	
245	AF19	HMD5	I/O	
246	AE18	HMD3	I/O	
247	AB16	VSS	-	Ground
248	AC16	VSS2	-	Ground
249	AD17	HMD1	I/O	Wave memory data bus (Upper data memory)
250	AF18	HMD2	I/O	
251	AE17	HMD0	I/O	
252	AF17	DCSH0	O	
253	AB15	VSS	-	Ground
254	AC15	VDDS	-	Power supply +3 V
255	AD16	DCSH1	O	
256	AE16	DQMH3	O	MASK signal
257	AF16	DQMH1	O	
258	AD15	DMAH14	O	Address bus (DIMM, SDRAM)
259	AE15	DMAH13	O	
260	AB14	VSS	-	Ground
261	AC14	VSS2	-	Ground
262	AD14	DMAH11	O	Address bus (DIMM, SDRAM)
263	AF15	DMAH12	O	
264	AE14	DMAH10	O	
265	AF14	DMAH9	O	
266	AF13	DMAH8	O	
267	AB13	VDDS	-	Power supply +3 V
268	AC13	VDDS	-	Power supply +3 V
269	AD13	DMAH6	O	Address bus (DIMM, SDRAM)
270	AE13	DMAH7	O	
271	AE12	DMAH4	O	
272	AD12	DMAH3	O	
273	AC12	VDDS	-	Power supply +1.5 V
274	AB12	VSS	-	Ground
275	AF12	DMAH5	O	Address bus (DIMM, SDRAM)
276	AF11	DMAH2	O	
277	AE11	DMAH1	O	
278	AD11	DMAH0	O	
279	AC11	VSS	-	Ground
280	AB11	VSS	-	Ground
281	AF10	DRAS1	O	
282	AE10	DCSH2	O	
283	AF9	DQMH2	O	MASK signal
284	AD10	DCSH3	O	
285	AC10	VDDC	-	Power supply +1.5 V
286	AB10	VSS2	-	Ground
287	AE9	DQMH0	O	MASK signal
288	AF8	DWEN1	O	
289	AD9	DCAS1	O	
290	AE8	DCLK2	O	
291	AC9	VDDS	-	Power supply +3 V
292	AB9	VDDC	-	Power supply +1.5 V
293	AD8	DCLK3	O	
294	AF7	MELO0	O	MEL wave data output
295	AE7	MELO1	O	
296	AD7	MELO2	O	
297	AC8	VDDS	-	
298	AB8	VSS	-	Ground
299	AF6	MELO3	O	MEL wave data output
300	AE6	MELO4	O	
301	AF5	MELO5	O	
302	AC7	MELO6	O	
303	AD6	MELO7	O	
304	AB7	WCLK0	O	For DAC LR clock
305	AC6	WCLK1	O	
306	AE5	EIRQ	O	
307	AF4	EICN	O	
308	AD5	ESDA	I/O	
309	AE4	ESCL	I/O	
310	AB6	MELI0	I	MEL wave data input
311	AC5	MELI1	I	
312	AD4	MELI2	I	
303	AF3	MELI3	I	
314	AE3	MELI4	I	
315	AF2	MELI5	I	

PIN NO.	OUTER NO.	NAME	I/O	FUNCTION
316	AB5	VSS2	-	Ground
317	AC4	VDDC	-	Power supply +1.5 V
318	AD3	MELI6	I	MEL wave data input
319	AE2	MELI7	I	
320	AF1	ADLR	O	Power supply +3 V
321	AB4	DITO	O	
322	AA5	VSS	-	Ground
323	AC3	AFRM	I/O	
324	AD2	ACLK	I/O	
325	AE1	ADIR	O	
326	AD1	ADAT0	I/O	Data bus (ABUS)
327	AA4	VDDS	-	Power supply +3 V
328	Y5	ADAT9	I/O	Data bus (ABUS)
329	AB3	ADAT3	I/O	
330	AC2	ADAT1	I/O	
331	AC1	ADAT2	I/O	
332	Y4	ADAT10	I/O	
333	AA3	ADAT6	I/O	
334	W5	VSS	-	Ground
335	W4	VDDS	-	Power supply +3 V
336	AB2	ADAT4	I/O	Data bus (ABUS)
337	AB1	ADAT5	I/O	
338	Y3	ADAT11	I/O	
339	AA2	ADAT7	I/O	
340	V5	ADAT14	I/O	
341	V4	ADAT15	I/O	
342	W3	ADAT13	I/O	
343	AA1	ADAT8	I/O	
344	Y2	ADAT12	I/O	
345	Y1	TDI	I	
346	U5	VSS2	-	Ground
347	U4	VDDC	-	Power supply +1.5 V
348	V3	HRD13	I/O	DRAM data bus
349	W2	HRD15	I/O	
350	W1	HRD14	I/O	
351	V2	HRD12	I/O	
352	T5	HRD7	I/O	
353	T4	HRD6	I/O	
354	U3	HRD10	I/O	
355	V1	HRD11	I/O	
356	U2	HRD9	I/O	
357	U1	HRD8	I/O	
358	R5	VSS	-	Ground
359	R4	VDDS	-	Power supply +3 V
360	T3	HRD5	I/O	DRAM data bus
361	T2	HRD4	I/O	
362	T1	HRD3	I/O	
363	R3	HRD2	I/O	
364	R2	HRD1	I/O	
365	P5	VDDS	-	Power supply +3 V
366	P4	HRD0	I/O	DRAM data bus
367	P3	RWEN	O	DRAM write enable
368	R1	RQML	O	
369	P2	RCAS	O	DRAM column address strobe (RAS signal)
370	P1	RRAS	O	DRAM row address strobe (RAS signal)
371	N1	RA13	O	DRAM address bus
372	N5	VDDS	-	Power supply +3 V
373	N4	VDDS	-	Power supply +3 V
374	N3	RA10	O	DRAM address bus
375	N2	RA12	O	
376	M2	RA1	O	
377	M3	RA2	O	
378	M4	VDDS	-	Power supply +3 V
379	M5	VSS	-	Ground
380	M1	RA0	O	DRAM address bus
381	L1	RA3	O	
382	L2	RA4	O	
383	L3	RA5	O	
384	L4	VSS2	-	Ground
385	L5	VSS	-	Ground
386	K1	RA6	O	DRAM address bus
387	K2	RA7	O	
388	J1	RA9	O	
389	K3	RA8	O	
390	K4	VDDC	-	Power supply +1.5 V
391	K5	VSS2	-	Ground
392	J2	RA11	O	DRAM address bus
393	H1	RCLK	O	
394	J3	RCLKE	O	
395	H2	RCLKIN	I	
396	J4	VDDS	-	Power supply +3 V
397	J5	VDDC	-	Power supply +1.5 V
398	H3	RQMH	O	
399	G1	LRD15	I/O	DRAM data bus (Lower data)
400	G2	LRD14	I/O	
401	G3	LRD13	I/O	
402	H4	VDDS	-	Power supply +3 V
403	H5	VSS	-	Ground
404	F1	LRD12	I/O	DRAM data bus (Lower data)
405	F2	LRD11	I/O	
406	E1	LRD8	I/O	
407	G4	VDDS	-	Ground
408	F3	LRD10	I/O	DRAM data bus (Lower data)
409	G5	VDDS	-	Ground
410	F4	LRD9	I/O	DRAM data bus (Lower data)
411	E2	LRD7	I/O	
412	D1	LRD5	I/O	
413	E3	LRD6	I/O	
414	D2	LRD4	I/O	
415	F5	VSS2	-	Ground
416	E4	VSS	-	Ground
417	D3	LRD3	I/O	DRAM data bus (Lower data)
418	C1	LRD2	I/O	
419	C2	LRD1	I/O	
420	B1	LRD0	I/O	

● M38044M4-C16FP (X4406100) LED DRIVER/SWITCH SCAN

PNL1: IC100

PIN NO.	NAME	I/O	FUNCTION	PIN NO.	NAME	I/O	FUNCTION
1	P62/AN2	I/O	Port6 / A-D converter input	33	P17	I/O	Port1
2	P61/AN1	I/O		34	P16	I/O	
3	P60/AN0	I/O		35	P15	I/O	
4	P57/INT3	I/O	Port5 / Interrupt input	36	P14	I/O	
5	P56/PWM	I/O	Port5 / PWM output	37	P13	I/O	
6	P55/CNTR1	I/O	Port5 / Timer Y	38	P12	I/O	
7	P54/CNTR0	I/O	Port5 / Timer X	39	P11/INT01	I/O	Port1 / Interrupt input
8	P53/SRDY2	I/O	Port5 / Serial ready	40	P10/INT41	I/O	
9	P52/SCLK2	I/O	Port5 / Serial clock	41	P07/AN15	I/O	Port0 / A-D converter input
10	P51/SOUT2	I/O	Port5 / Serial output	42	P06/AN14	I/O	
11	P50/SIN2	I/O	Port5 / Serial input	43	P05/AN13	I/O	
12	P47/SRDY1/CNTR2	I/O	Port4 / Serial ready / Timer Z	44	P04/AN12	I/O	
13	P46/SCLK1	I/O	Port4 / Serial clock	45	P03/AN11	I/O	
14	P45/TxD1	I/O	Port4 / Transmit data	46	P02/AN10	I/O	
15	P44/RxD1	I/O	Port4 / Receive data	47	P01/AN9	I/O	
16	P43/INT2	I/O	Port4 / Interrupt input	48	P00/AN8	I/O	
17	P42/INT1	I/O		49	P37/SRDY3	I/O	Port3 / Serial ready
18	CNVSS	I	Ground	50	P36/SCLK3	I/O	Port3 / Serial clock
19	RESET	I	Reset input	51	P35/TxD3	I/O	Port3 / Transmit data
20	P41/INT00/XCIN	I/O	Port4 / Interrupt input / Sub-clock generating input	52	P34/RxD3	I/O	Port3 / Receive data
21	P40/INT40/XCOUT	I/O	Port4 / Interrupt input / Sub-clock generating output	53	P33/SCL	I/O	Port3 / Serial clock
22	XIN	I	Clock input	54	P32/SDA	I/O	Port3 / Serial data
23	XOUT	O	Clock output	55	P31/DA2	I/O	Port3 / D-A converter output
24	VSS	-	Ground	56	P30/DA1	I/O	
25	P27(LED7)	I/O	Port2	57	VCC	-	Power supply +5V
26	P26(LED6)	I/O		58	VREF	I	Reference voltage
27	P25(LED5)	I/O		59	AVSS	I	Analog ground
28	P24(LED4)	I/O		60	P67/AN7	I/O	Port6 / A-D converter input
29	P23(LED3)	I/O		61	P66/AN6	I/O	
30	P22(LED2)	I/O		62	P65/AN5	I/O	
31	P21(LED1)	I/O		63	P64/AN4	I/O	
32	P20(LED0)	I/O		64	P63/AN3	I/O	

● μPD780031AYGK-NO4 (X0031200) LKS

MK SUB: IC001

PIN NO.	NAME	I/O	FUNCTION	PIN NO.	NAME	I/O	FUNCTION
1	P50/A8	I/O	Port 5 / Higher address bus	33	P10/ANI0	I	Port 1 / A/D converter analog input
2	P51/A9	I/O		34	AVREF	I	A/D converter reference voltage input
3	P52/A10	I/O		35	AVDD	-	Analog power supply
4	P53/A11	I/O		36	RESET	I	System reset input
5	P54/A12	I/O		37	XT2	-	Subsystem clock oscillation
6	P55/A13	I/O		38	XT1	I	
7	P56/A14	I/O		39	IC	-	Internally connected
8	P57/A15	I/O		40	X2	-	Main system clock oscillation
9	Vss0	-	Ground	41	X1	I	
10	VDD0	-	Power supply	42	Vss1	-	Ground
11	P30	I/O	Port 3	43	P00/INTP0	I/O	Port 0 / External interrupt request input
12	P31	I/O		44	P01/INTP1	I/O	
13	P32/SDA0	I/O	Port 3 / Serial data input/output	45	P02/INTP2	I/O	
14	P33/SCL0	I/O	Port 3 / Serial clock input/output	46	P03/INTP3/ADTRG	I/O	Port 0 / External interrupt request input / Trigger signai input
15	P34	I/O	Port 3	47	P70/TI00/TO0	I/O	Port 7 / External count clock input / 16-bit timer/event counter 0 output
16	P35	I/O		48	P71/TI01	I/O	Port 7 / Capture trigger input
17	P36	I/O		49	P72/TI50/TO50	I/O	Port 7 / External count clock input / 8-bit timer/event counter 50 output
18	P20/SI30	I/O	Port 2 / Serial data input	50	P73/TI51/TO51	I/O	Port 7 / External count clock input / 8-bit timer/event counter 51 output
19	P21/SO30	I/O	Port 2 / Serial data output	51	P74/PCL	I/O	Port 7 / Clock output
20	P22/SCK30	I/O	Port 2 / Serial clock input/output	52	P75/BUZ	I/O	Port 7 / Buzzer output
21	P23RxD0	I/O	Port 2 / Serial data input	53	P64/RD	I/O	Port 6 / Strobe signal output for reading
22	P24/TxD0	I/O	Port 2 / Serial data output	54	P65/WR	I/O	Port 6 / Strobe signal output for writing
23	P25/ASCK0	I/O	Port 2 / Serial clock input/output	55	P66/WAIT	I/O	Port 6 / Wait insertion
24	VDD1	-	Power supply	56	P67/ASTB	I/O	Port 6 / Strobe output
25	AVss	-	Ground	57	P40/AD0	I/O	Port 4 / Lower address/data bus
26	P17/ANI7	I	Port 1 / A/D converter analog input	58	P41/AD1	I/O	
27	P16/ANI6	I		59	P42/AD2	I/O	
28	P15/ANI5	I		60	P43/AD3	I/O	
29	P14/ANI4	I		61	P44/AD4	I/O	
30	P13/ANI3	I		62	P45/AD5	I/O	
31	P12/ANI2	I		63	P46/AD6	I/O	
32	P11/ANI1	I		64	A47/AD7	I/O	

● **MPD6S004S** (X4404A00) **DC-DC CONVERTER** MA80S: IC007

PIN NO.	NAME	I/O	FUNCTION	PIN NO.	NAME	I/O	FUNCTION
1	VIN	I	Input voltage	17	GND	-	Ground
2	VIN	I		18	GND	-	
3	VIN	I		19	GND	-	
4	GND	-	Ground	20	VOUT5	O	Output voltage +5V
5	GND	-		21	VOUT5	O	
6	GND	-		22	VOUT5	O	
7	GND	-		23	VOUT5	O	
8	VOUT33	O	Output voltage +3.3V	24	VOUT5	O	
9	VOUT33	O		25	GND	-	Ground
10	VOUT33	O		26	GND	-	
11	VOUT33	O		27	GND	-	
12	VOUT33	O		28	GND	-	
13	No. pin	-		29	VIN	I	Input voltage
14	GND	-	Ground	30	VIN	I	
15	GND	-		31	VIN	I	
16	GND	-					

■ IC BLOCK DIAGRAM

● **TC74VHC14FT** (XV890A00)
Hex Inverter
DM: IC049

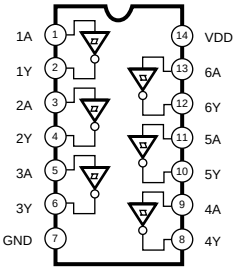

● **HD74LV21ATELL** (X0010A00)
Dual 4 Input AND
DM: IC027

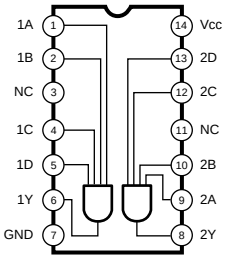

● **TC74VHC32FT** (XY945A00)
Quad 2 Input OR
DM: IC044, 048

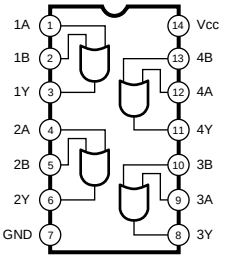

● **HD74LV126ATELL** (X3123A00)
Bus Buffer
DM: IC011

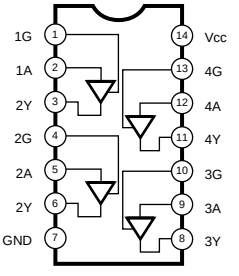

● **TC74VHC138FT** (XZ495A00)
3 to 8 Demultiplexer
DM: IC032

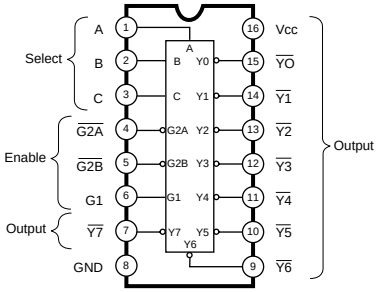

● **TC74VHC139FT** (XV893A00)
Dual 2 to 4 Demultiplexer
DM: IC033

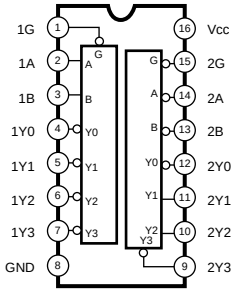

- **SN74LV174APWR** (X5189A00)
  Hex D-Type Flip-Flop
  DM: IC039

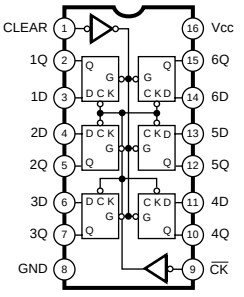

- **HD74LVC245ATELL** (XW148A00)
  HD74LV245ATELL (XW744A00)
  Octal 3-State Bus Transceiver
  DM: IC023 - 026, 030, 031, 046, 047, 055

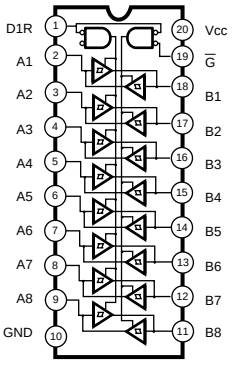

- **HD74LV273ATELL** (X2689A00)
  Octal D-Type Flir Flop
  DM: IC045

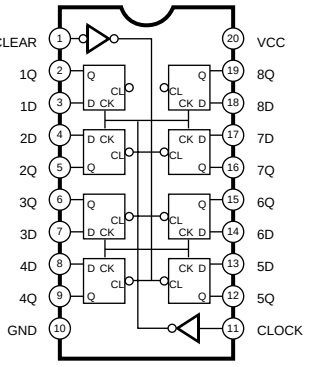

- **TC7W14FU** (XN883A00)
  TC7WH14FU (XY806A00)
  Triple Inverter
  DM: IC004 - 006, 008, 010

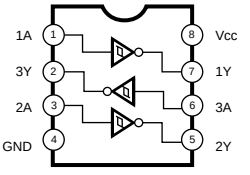

- **TC7W32FU(TE12L)** (XQ173A00)
  Dual 2 Input OR Gate
  DM: IC003, 041

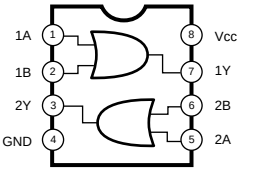

- **M5233FP-600D** (X0506A00)
  Comparator
  DM: IC009

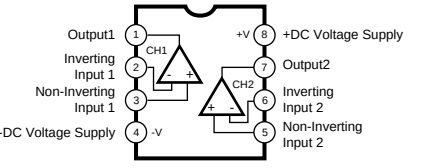

- **LT1945EMS#TR** (5154A00)
  DC-DC Converter
  DM: IC017

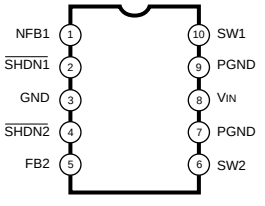

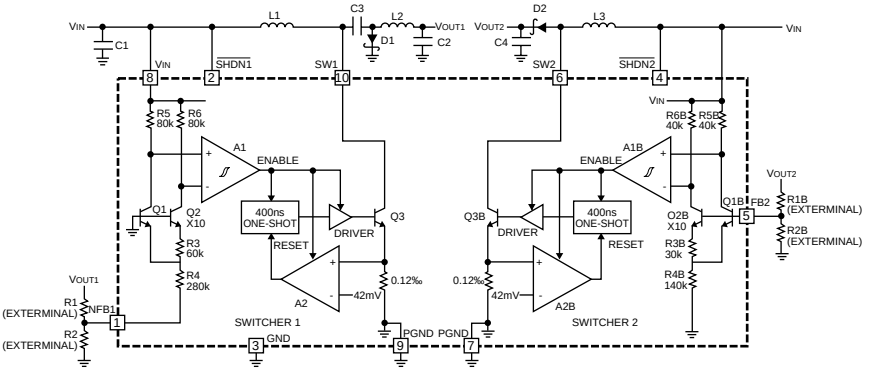

● **LM3525MX-H** (X3119A00)
USB Power Switch
DM: IC014

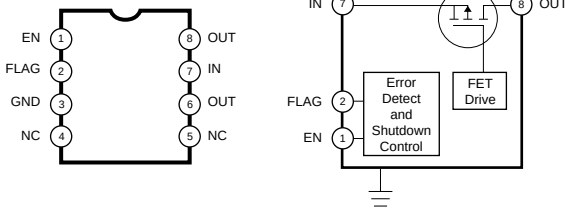

Pin No.	Pin Name	Pin Function
1	EN (LM3525-L) EN (LM3525-H)	Enable (Input): Logic-compatible enable input.
2	FLG	Fault Flag (Output): Active-low, open-drain output. Indicates overcurrent, UVLO, and thermal shutdown.
3	GND	Ground
4, 5	NC	Not internally connected.
7	IN	Supply Input: Input to the power switch and the supply voltage for the IC.
6, 8	OUT	Switch Output: Output of the high side switch. Pins 6 and 8 must be tied together.

● **SN75240P** (X5108A00)
USB Transient Suppressor
DJACK: IC101

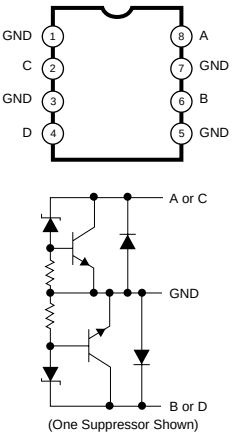

(One Suppressor Shown)

● ***μ*PC4574G2** (XE518A00)
Quad Operational Amplifier
EQ: IC002-005

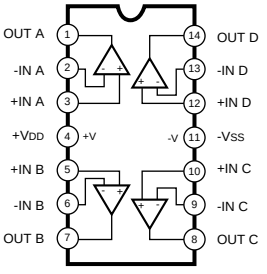

● ***μ*PC4570G2** (XF291A00)
Dual Operational Amplifier
AJACK: IC001, 002
DAC1A: IC302, 402-404
EQ: IC001
MIC: IC100

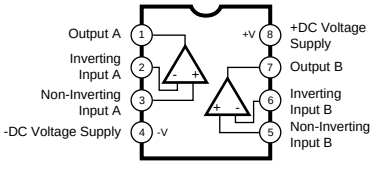

● **LA6517M-TE-R** (XT131A00)
Dual Power Operational Amplifier
AJACK: IC003
DM: IC011

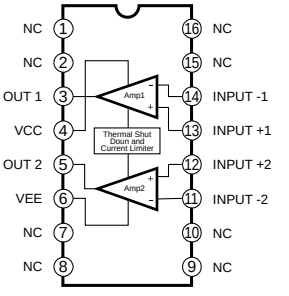

■ CIRCUIT BOARDS

AJACK Circuit Board (X4469B0) **32**
DAC1A Circuit Board (X5174B0) **33**
DJACK Circuit Board (X4470D0) **33**
DM Circuit Board (X4405D0) **30/31**
ENC Circuit Board (X4531C0) **32**
EQ Circuit Board (X4413A0) **41**
FU60 Circuit Board (XQ395A0) **34**
GHD EBUS L Circuit Board (XZ138D0) **36**
GHD H Circuit Board (X2218A0) **35**
GHD M Circuit Board (X2217A0) **37**
HP Circuit Board (XQ795A0) **41**
INV Circuit Board (X4532D0) **34**
MA80S Circuit Board (X4384D0) **38/39**
MIC Circuit Board (XV507D0) **40**
MK SUB Circuit Board (XZ142B0) **40**
MV2 Circuit Board (X4532D0) **40**
NET1 Circuit Board (XT123B0) **34**
PEDAL (SW) Circuit Board (XR780C0) **51**
PEDAL VR Circuit Board (XR780C0) **51**
PJK Circuit Board (X5143A0) **41**
PL Circuit Board (XR898A0) **41**
PNC Circuit Board (X4532D0) **42**
PNL1 Circuit Board (X4479D0) **44/46**
PNL2 Circuit Board (X4479D0) **50**
PNR1 Circuit Board (X4531C0) **48**
PNR2 Circuit Board (X4531C0) **50**
SM Circuit Board (X4511C0) **50**

Note: See parts list for details of circuit board component parts.

• DM Circuit Board

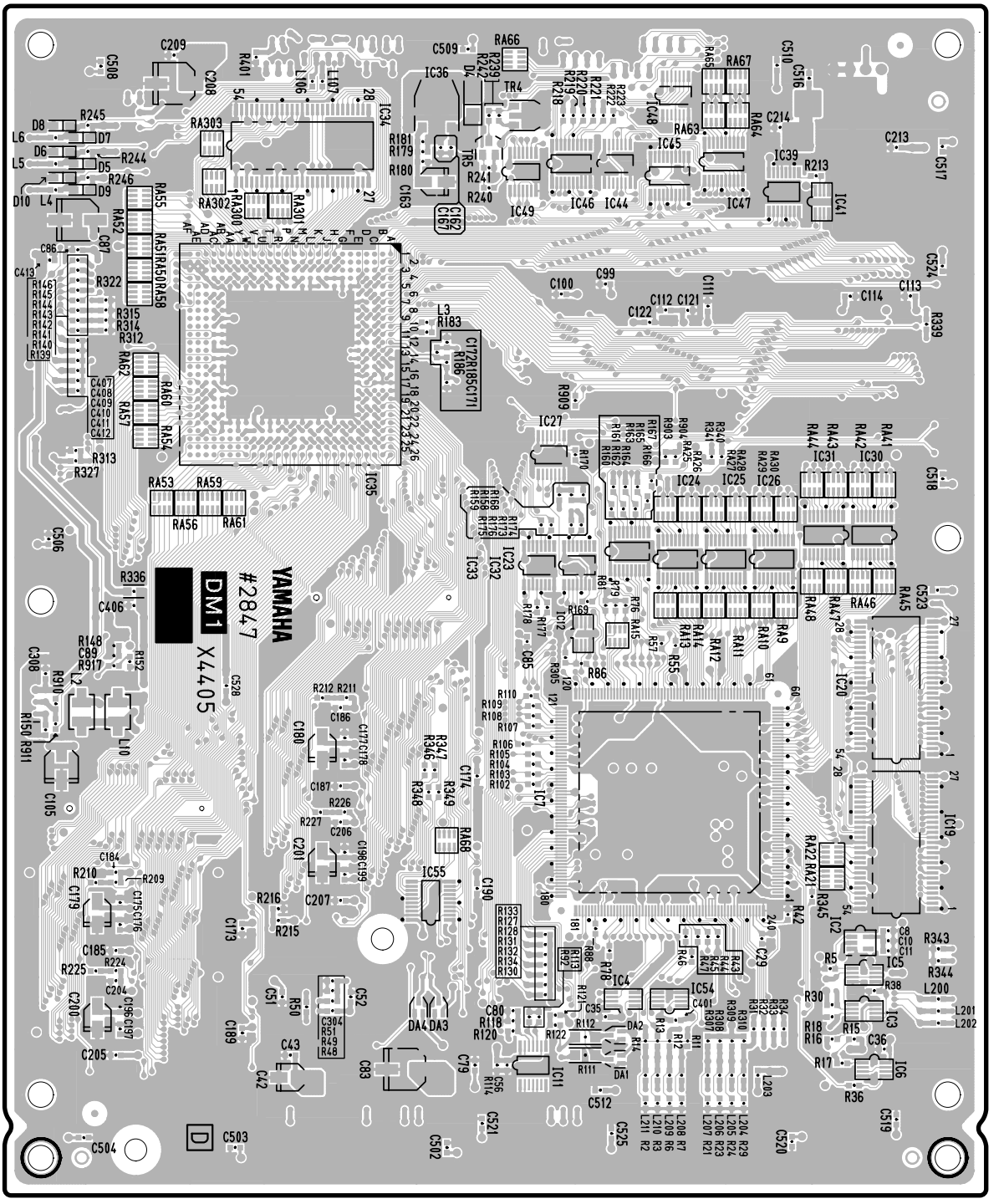

Component side

• DM Circuit Board

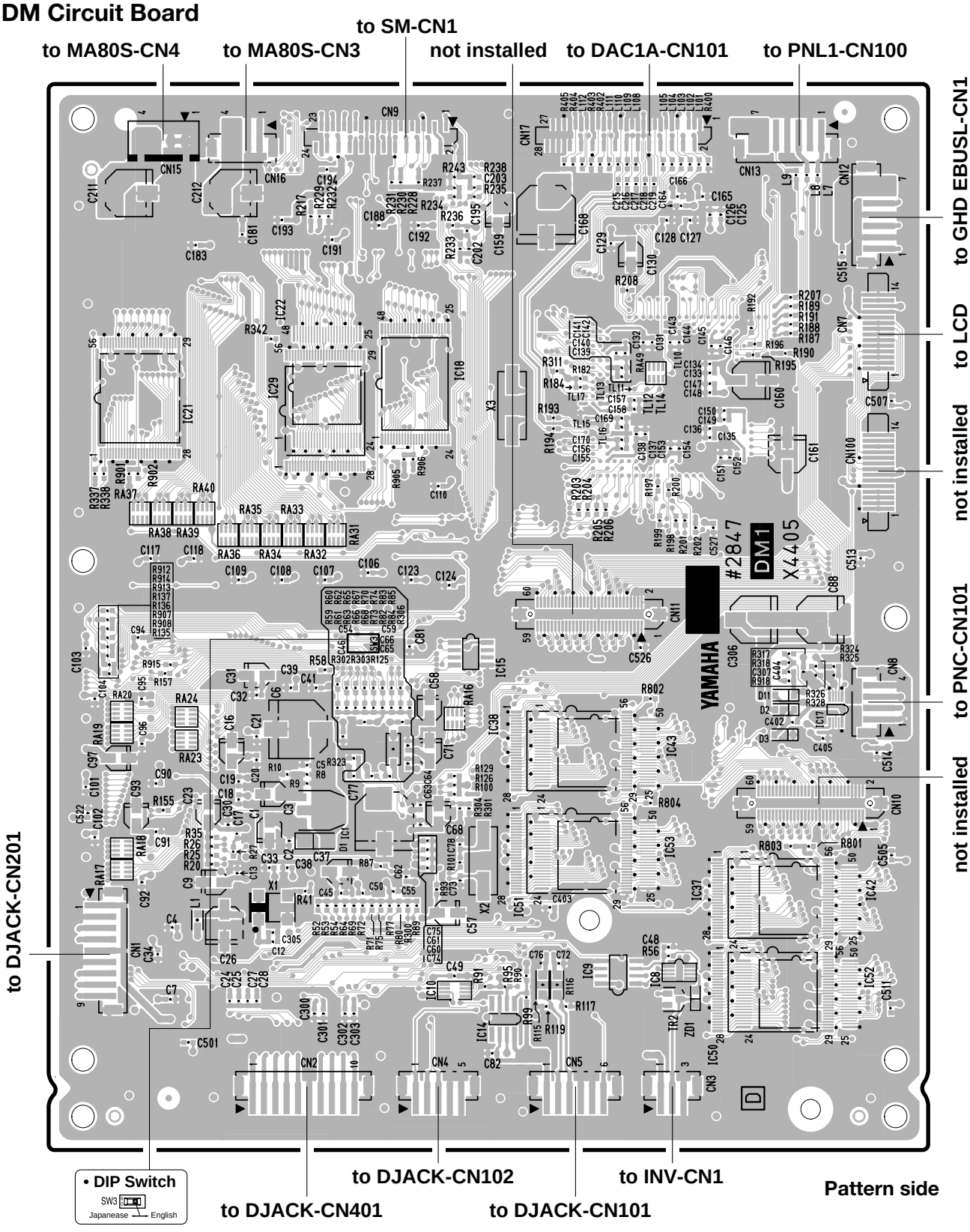

• AJACK Circuit Board

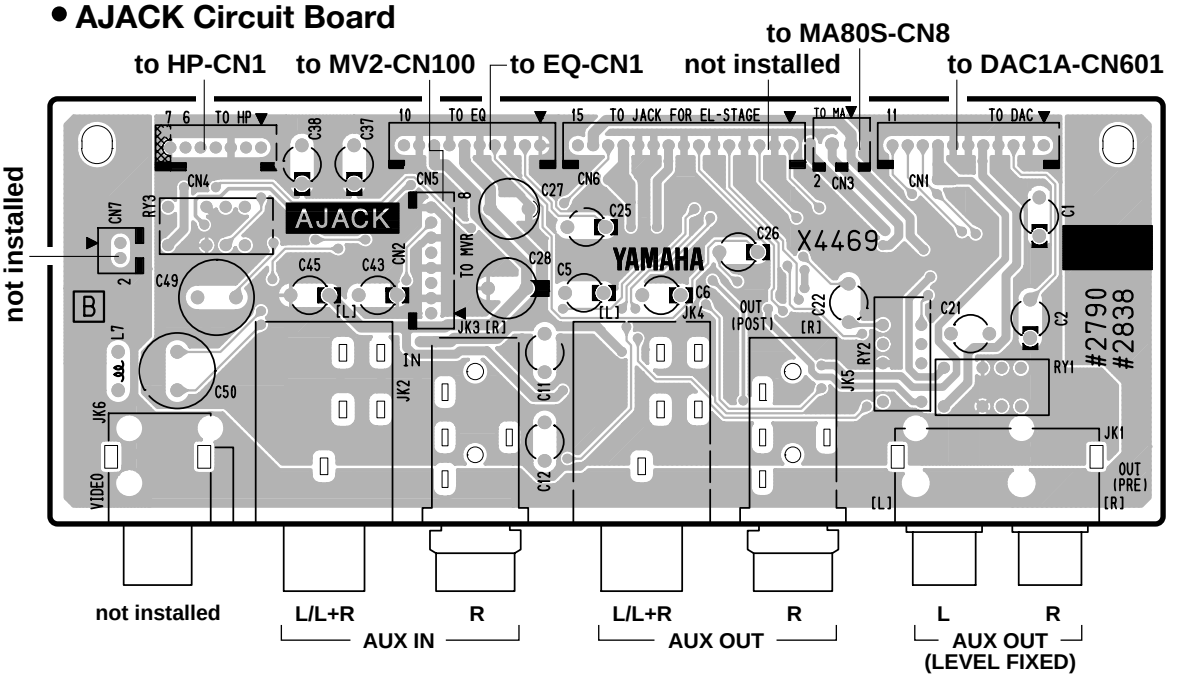

Component side

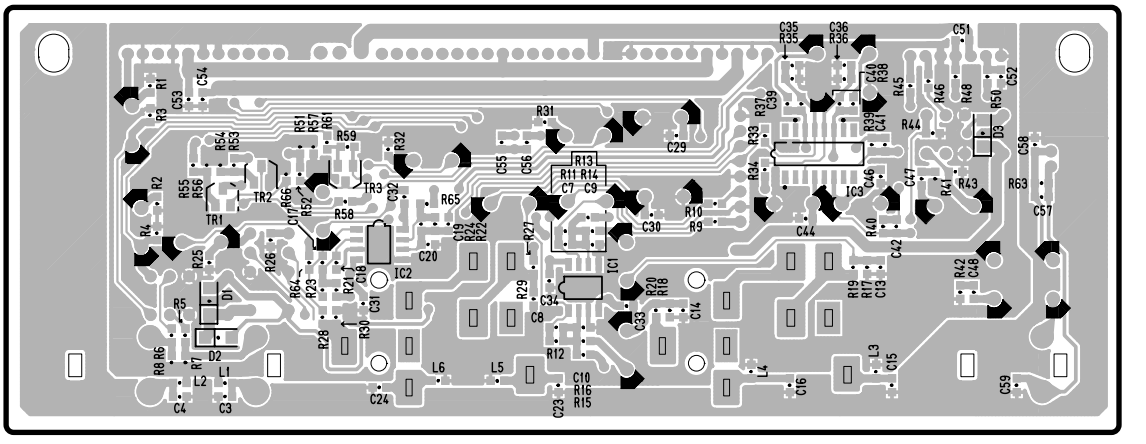

Pattern side

• ENC Circuit Board

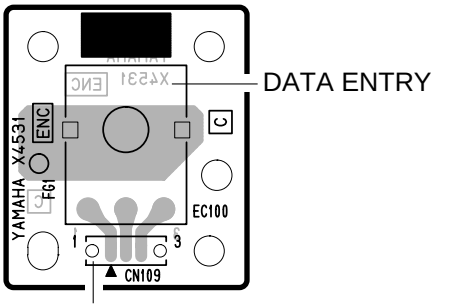

Component side

AJACK: 2NA-WB55550
ENC: 2NA-WB94150 ⚠1

• DJACK Circuit Board

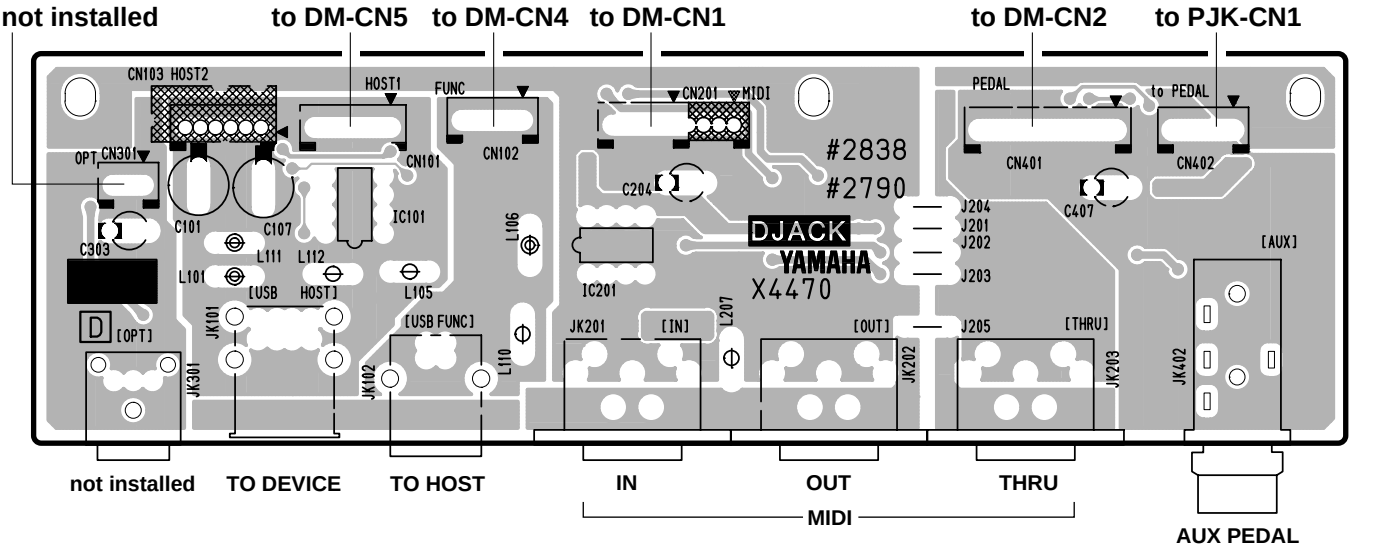

Component side

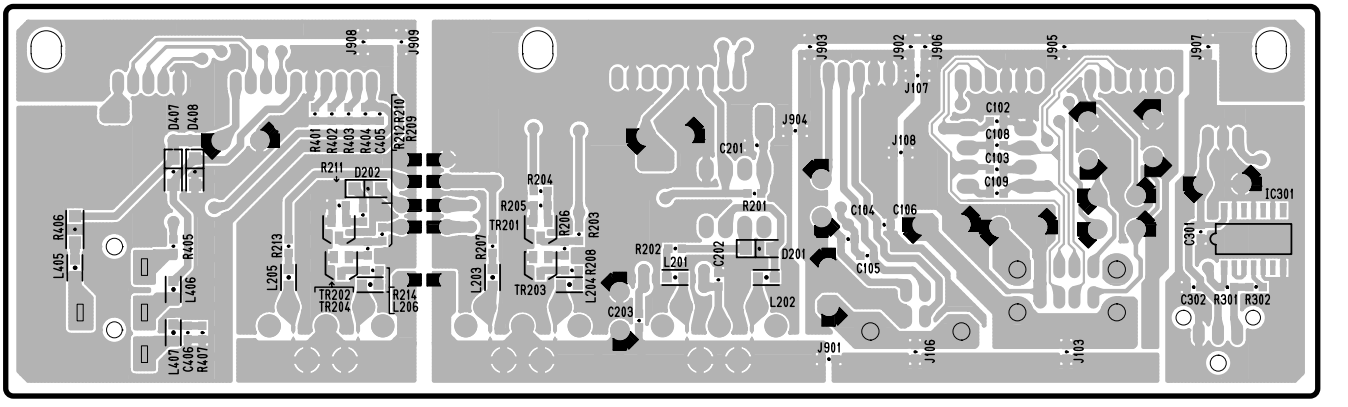

Pattern side

• DAC1A Circuit Board

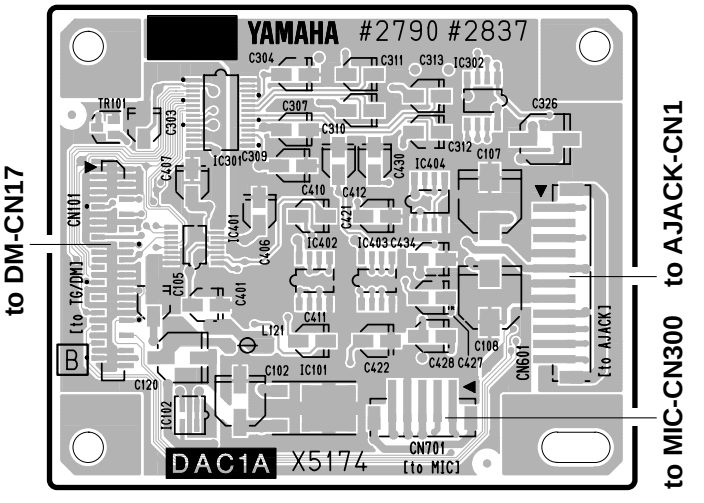

Component side

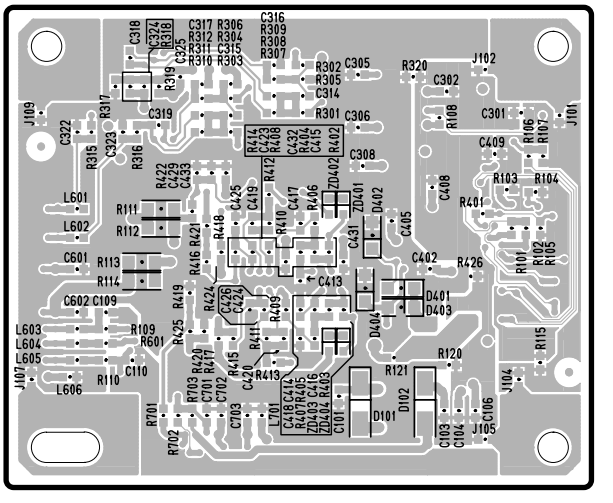

Pattern side

DJACK: 2NA-WB55590 ⚠2
DAC1A: 2NA-WC74790

• FU60 Circuit Board

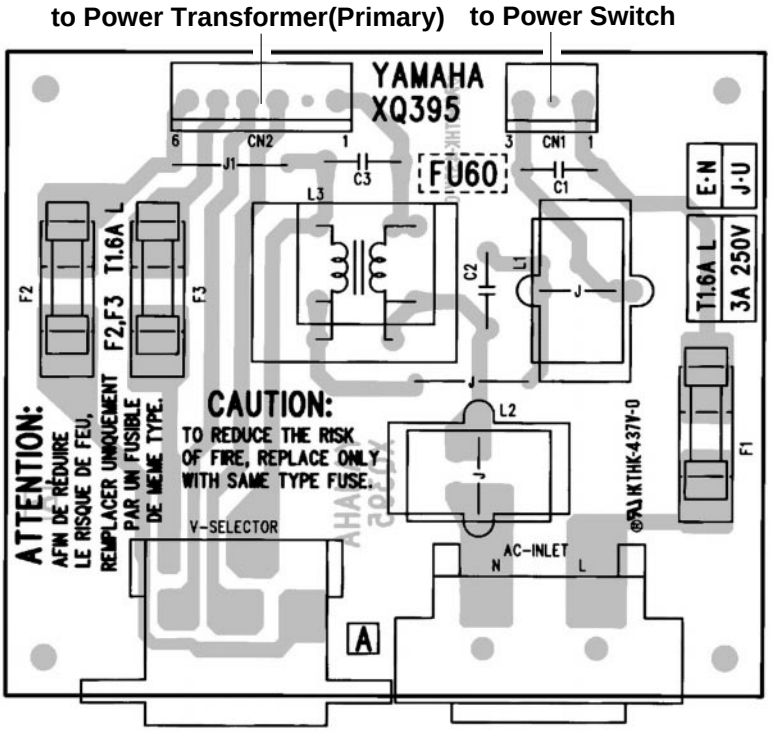

PARTS SPECIFICATIONS

		U	E,B,K	N
C1		0.01uF/125V	0.01uF/400V	0.01uF/400V
C2, C3		0.0047uF/125V	0.0047uF/400V	0.0047uF/400V
J1		○	○	×
FU60	F1	3A	T 1.6A L	3A
	F2	×	×	T 1.6A L
	F3	×	×	T 1.6A L
V-SEL		×	×	○

○: installed ×: not installed

• INV Circuit Board

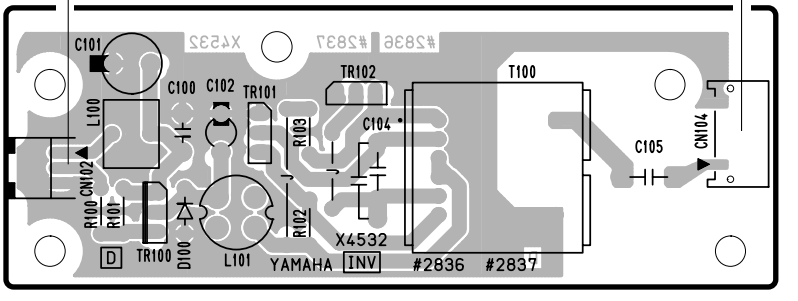

• NET1 Circuit Board

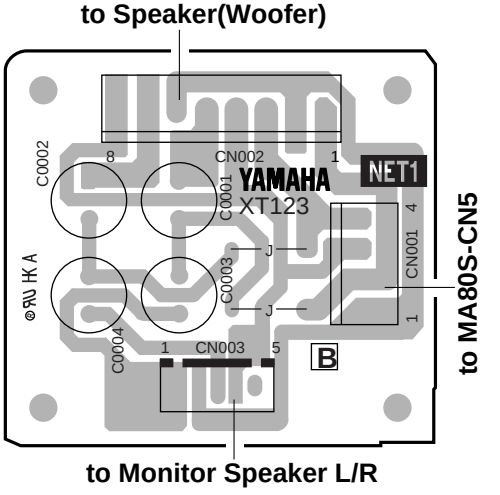

FU60: 2NA-VT47830
INV: 2NA-WB94300 △4
NET1: 2NA-VY64290 △1

• GHD H Circuit Board

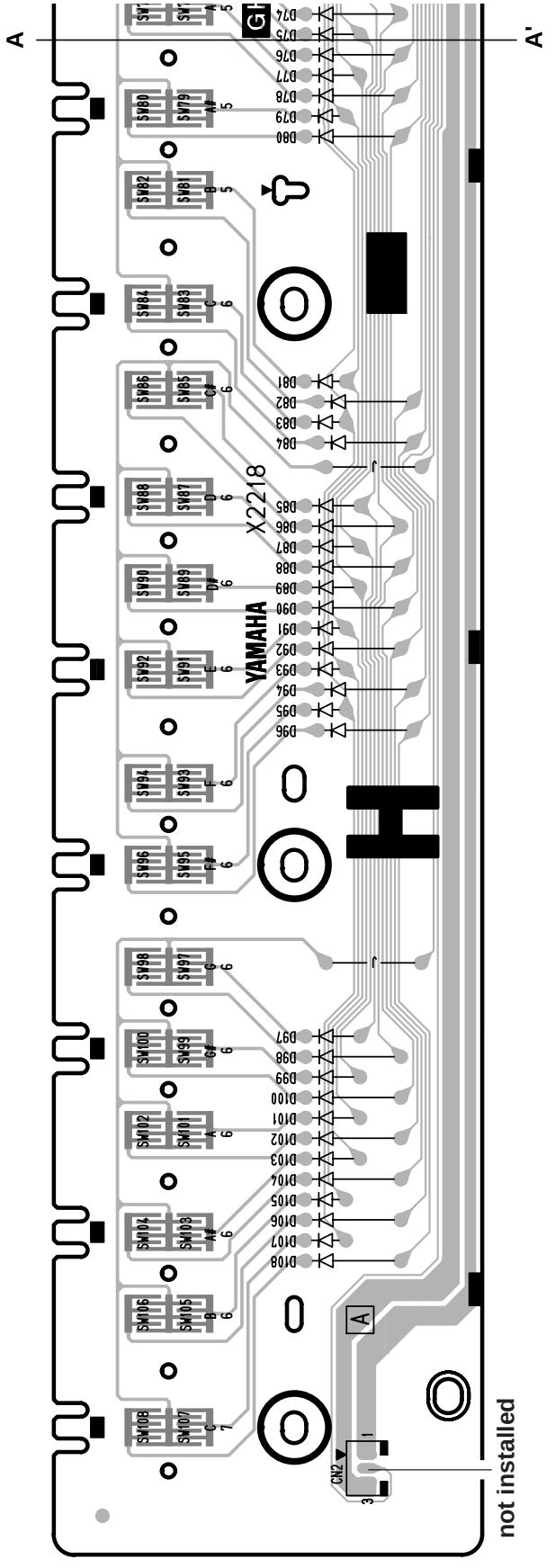

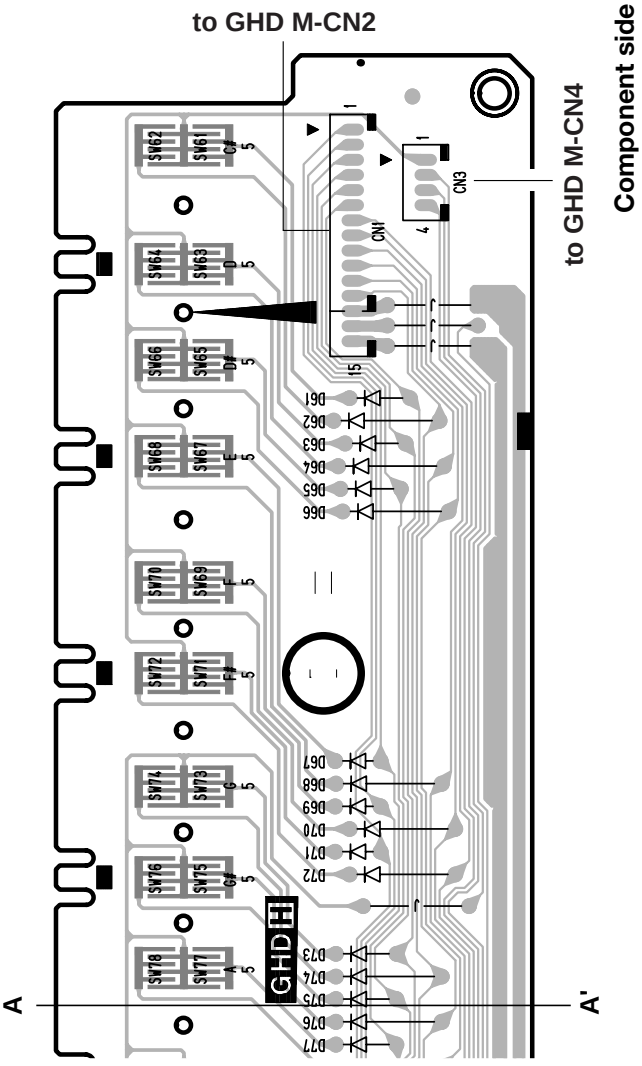

• GHD EBUS L Circuit Board

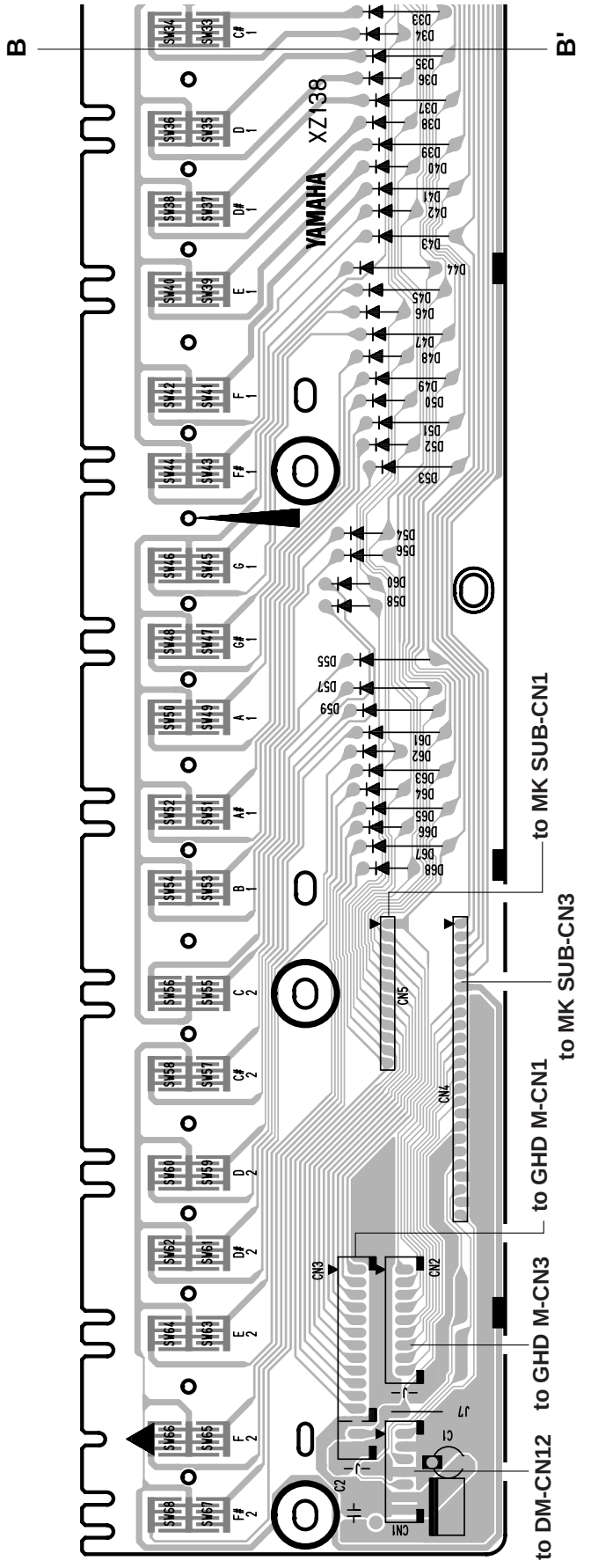

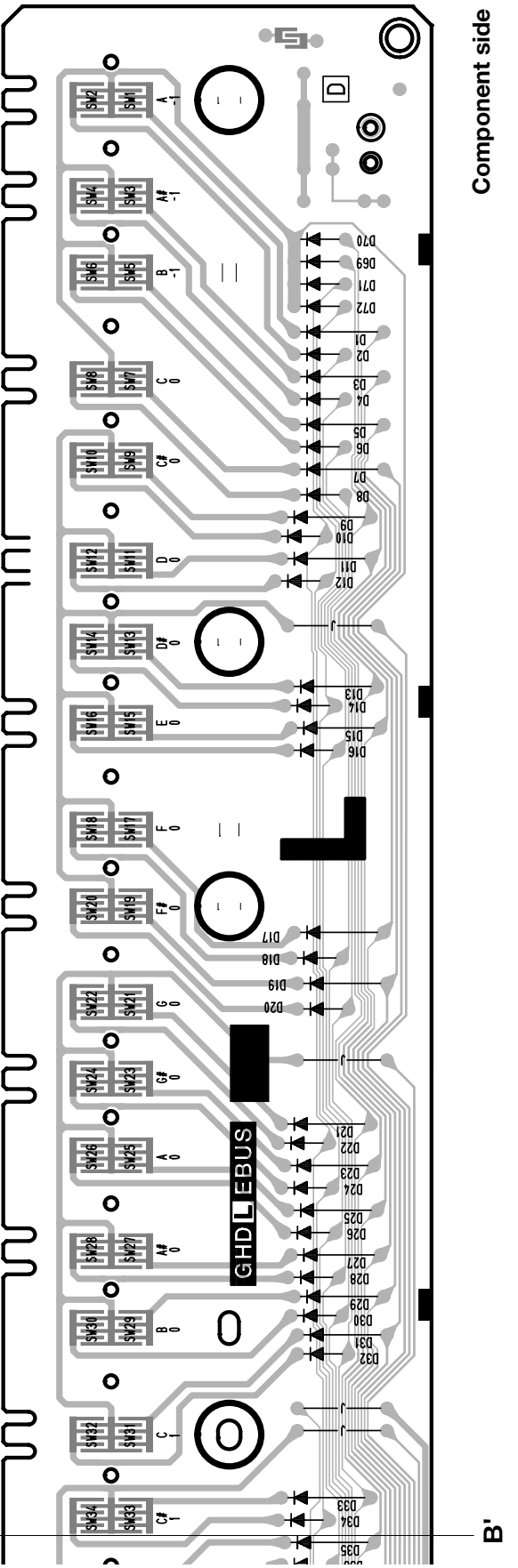

V851480

• GHD M Circuit Board

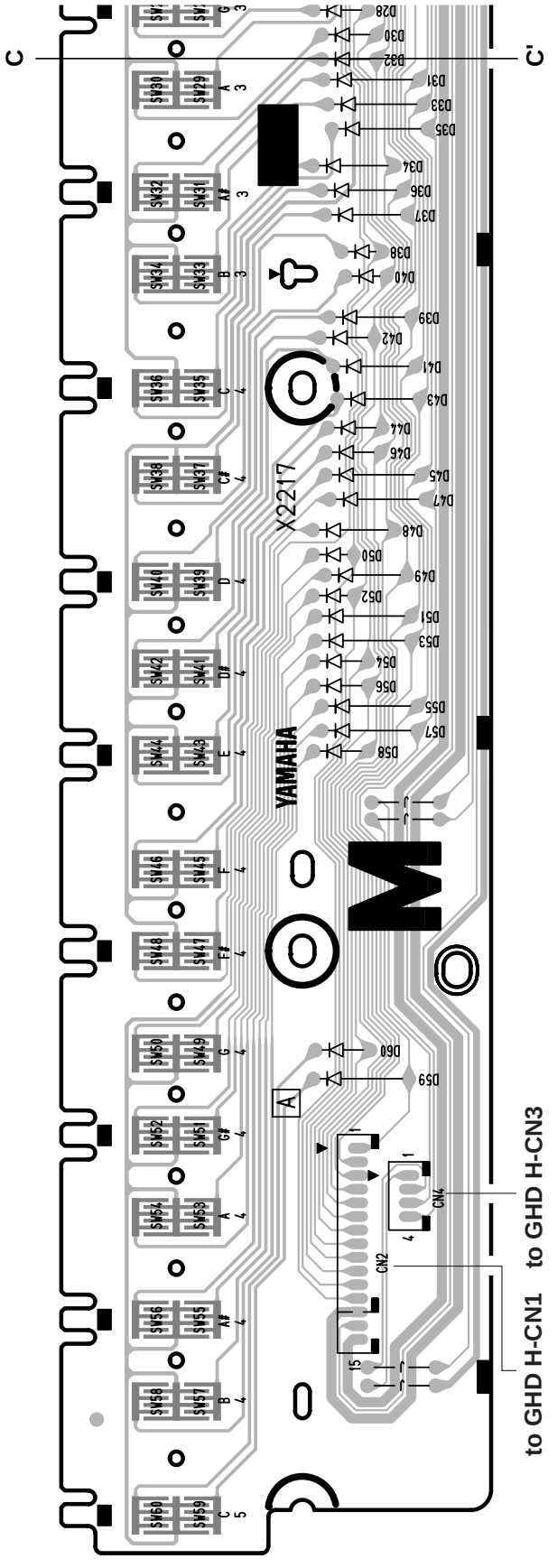

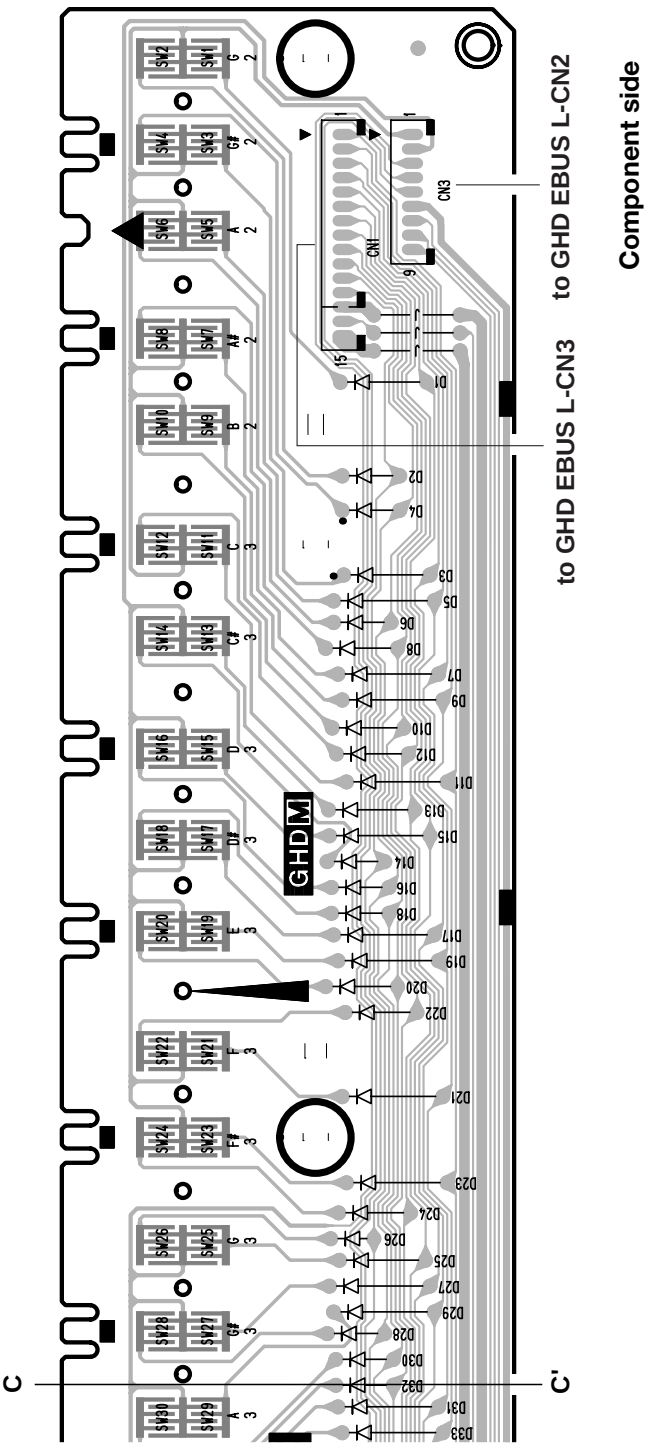

• MA80S Circuit Board

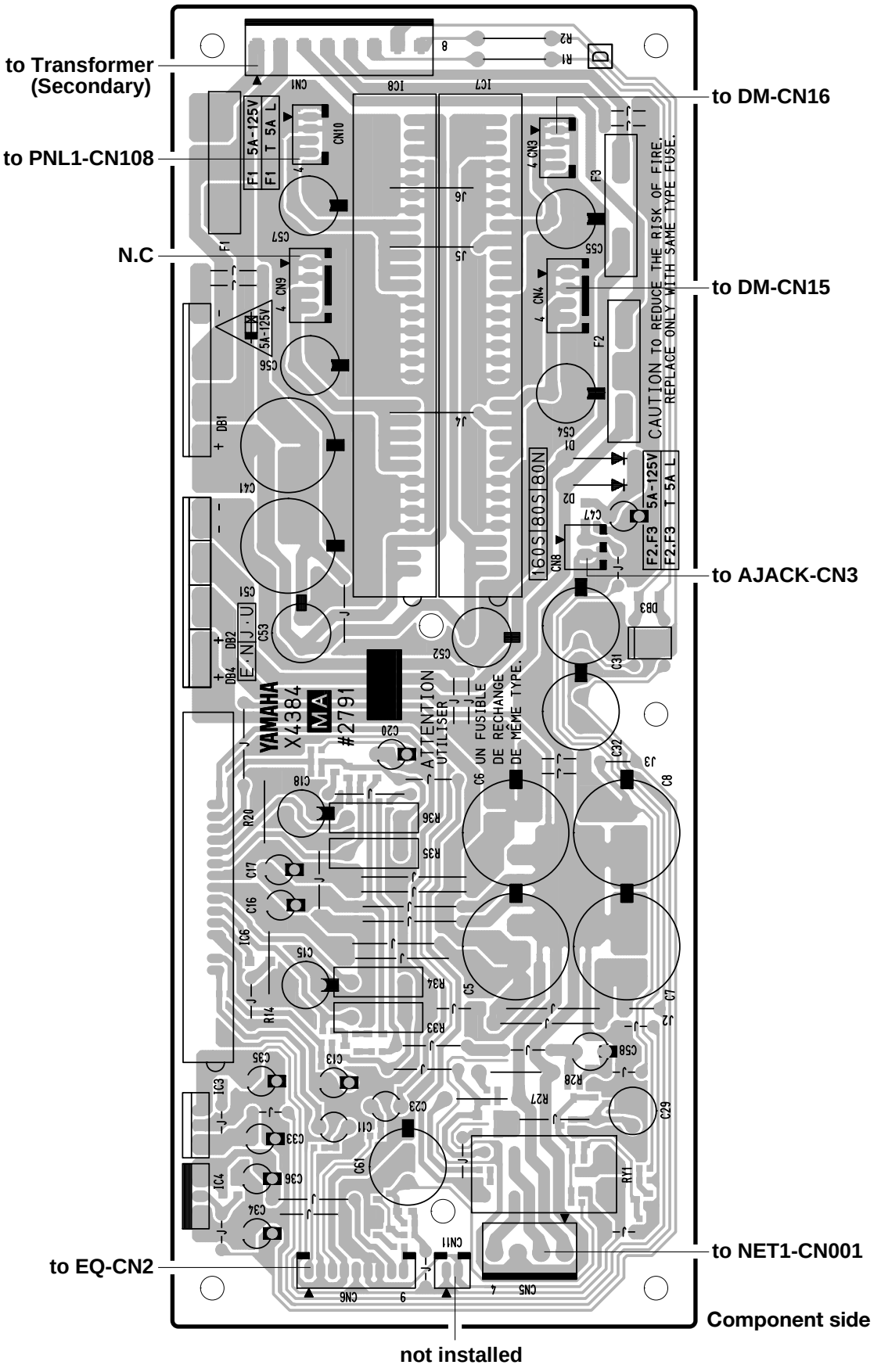

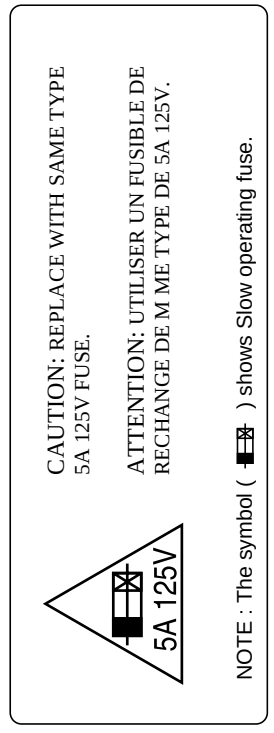

2NA-WB55420 2

• MA80S Circuit Board

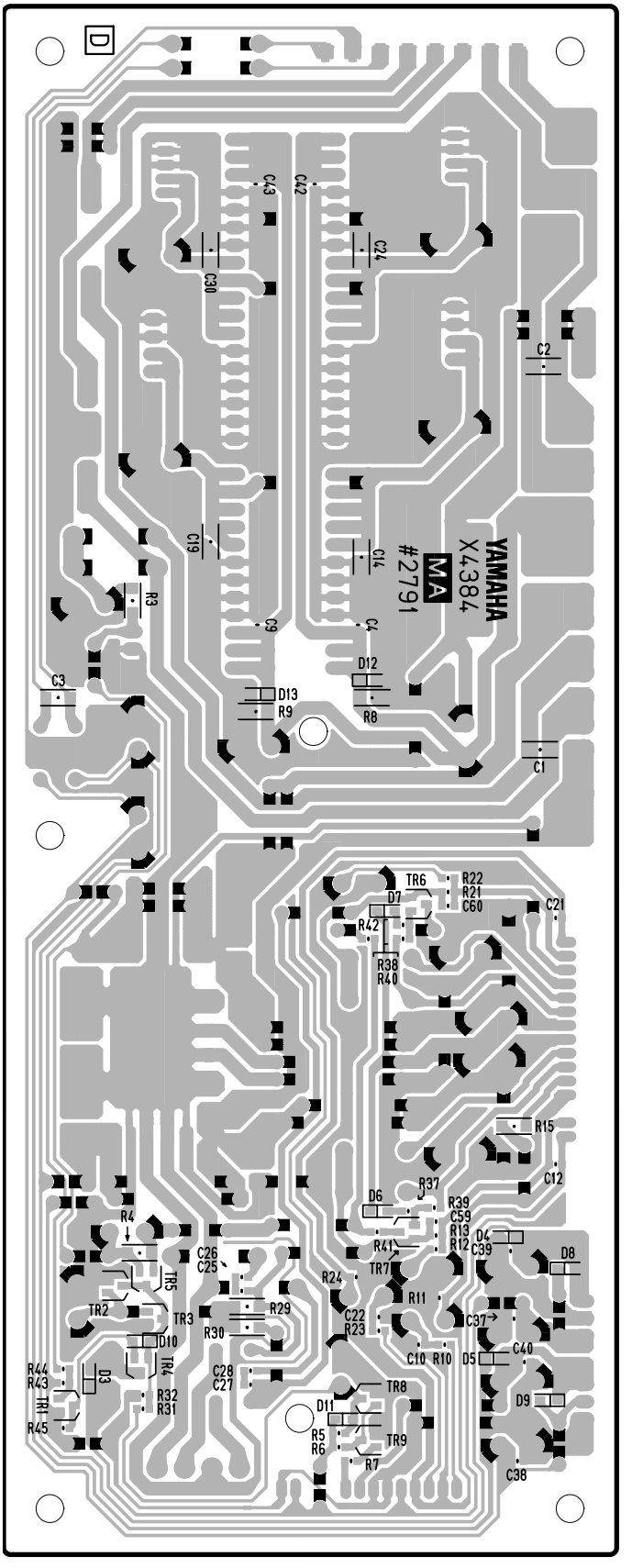

Pattern side

• MK SUB Circuit Board

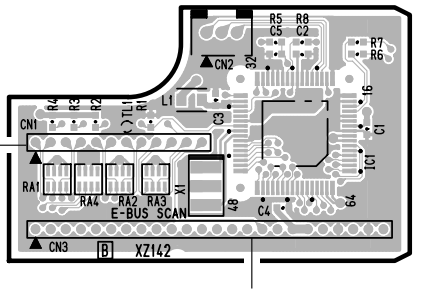

to GHD EBUS L-CN5 to GHD EBUS L-CN4

Component side

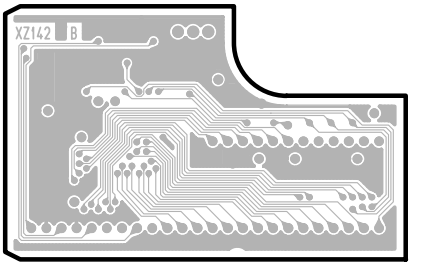

Pattern side

• MIC Circuit Board

to Keybed(Ground) to DAC1A-CN701

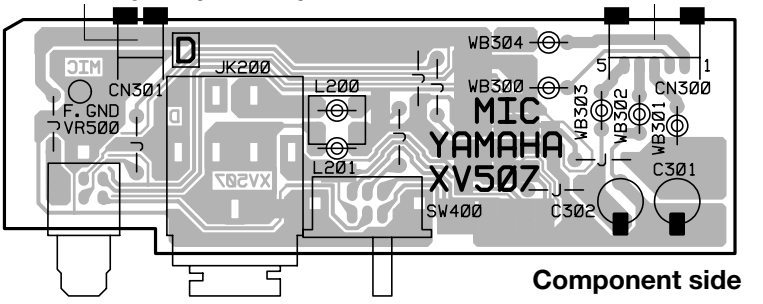

Component side

INPUT VOLUME MIC./LINE IN MIC./LINE

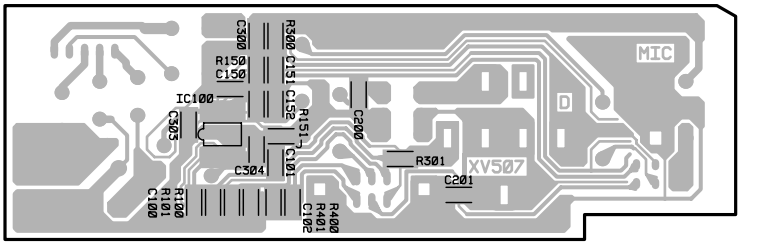

Pattern side

• MV2 Circuit Board

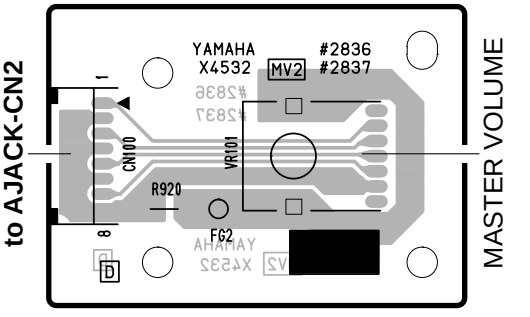

Component side

MIC: 2NA-V313580 △3
MK SUB: V658820
MV2: 2NA-WB94300 △4

• HP Circuit Board

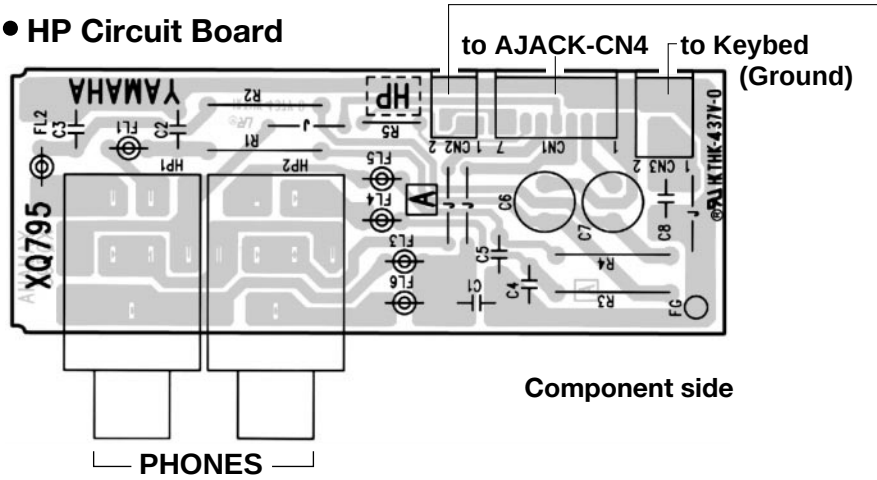

• PL Circuit Board

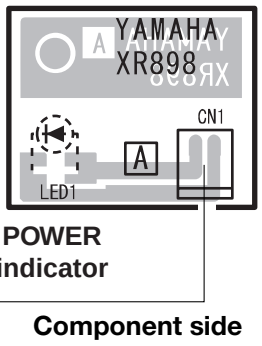

• PJK Circuit Board

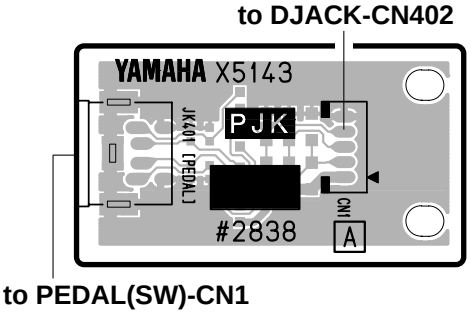

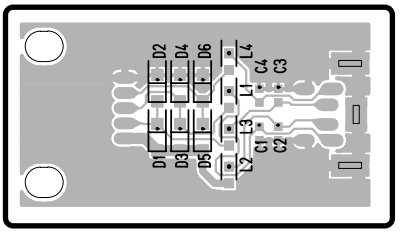

• EQ Circuit Board

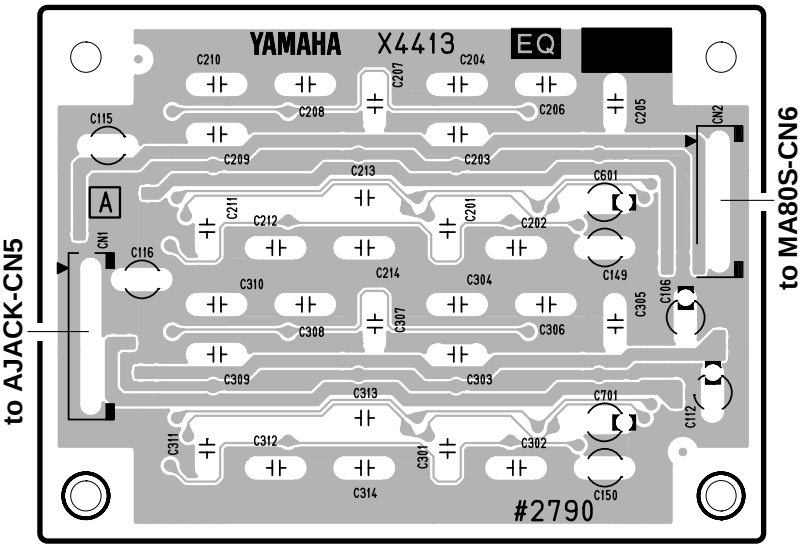

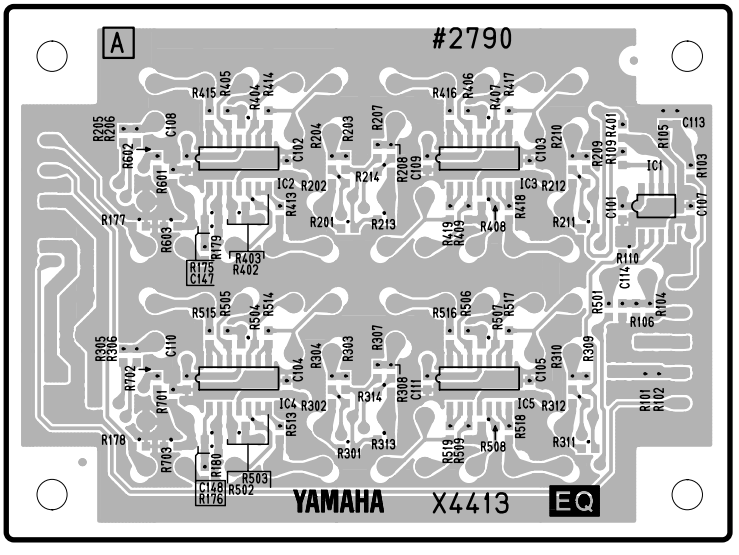

HP: 2NA-VY66380 ⚠1
PJK: 2NA-WC56110
PL: 2NA-VN63740
EQ: 2NA-WB55450

• PNC Circuit Board

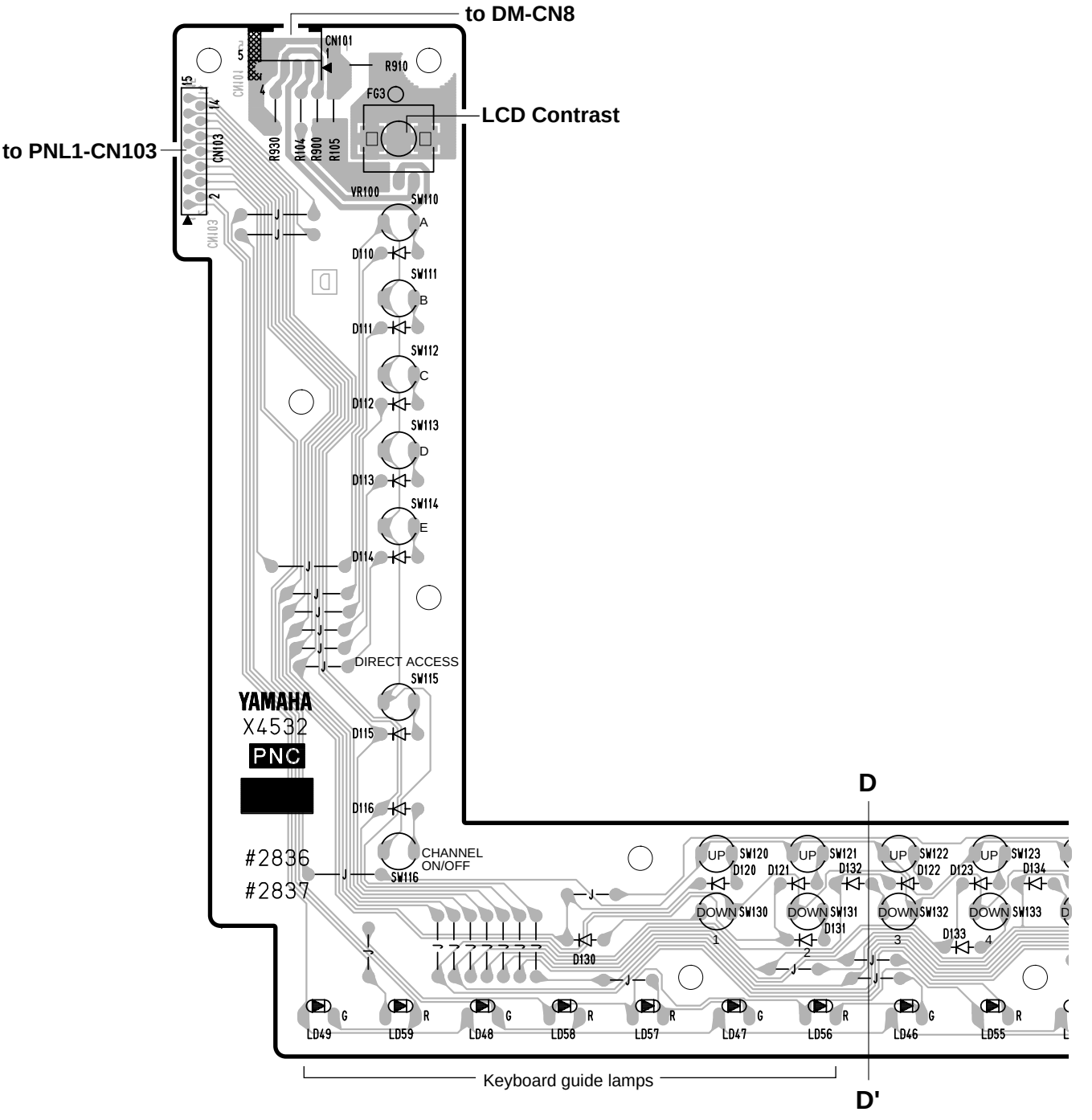

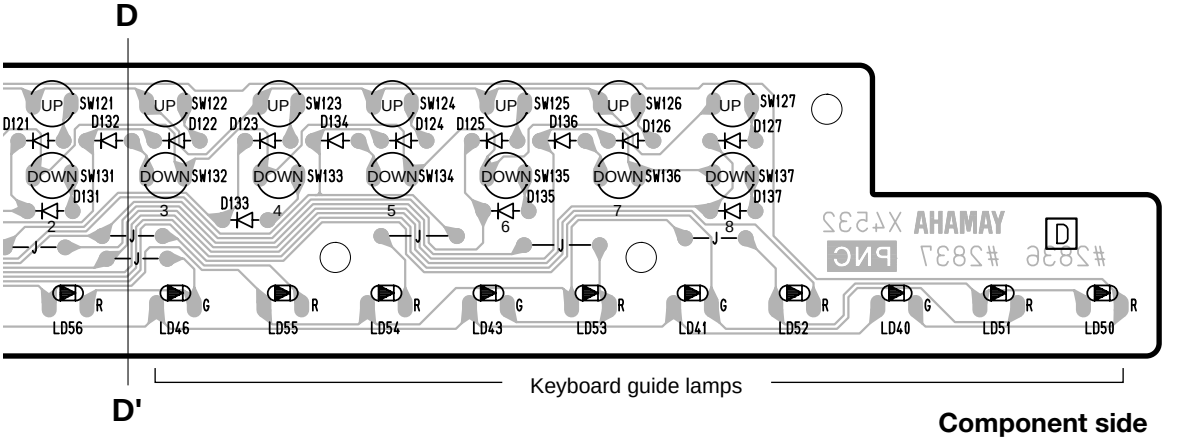
D
UP SW121 D121 D132
UP SW122 D122
UP SW123 D123 D134
UP SW124 D124
UP SW125 D125 D136
UP SW126 D126
UP SW127 D127
DOWN SW131 D131
DOWN SW132
DOWN SW133 D133
DOWN SW134
DOWN SW135 D135
DOWN SW136
DOWN SW137 D137
2
3
4
5
6
7
8
J
LD56
LD46
LD55
LD54
LD43
LD53
LD41
LD52
LD40
LD51
LD50
R
G
AHAMAY
D
Keyboard guide lamps
D'
Component side

• PNL1 Circuit Board

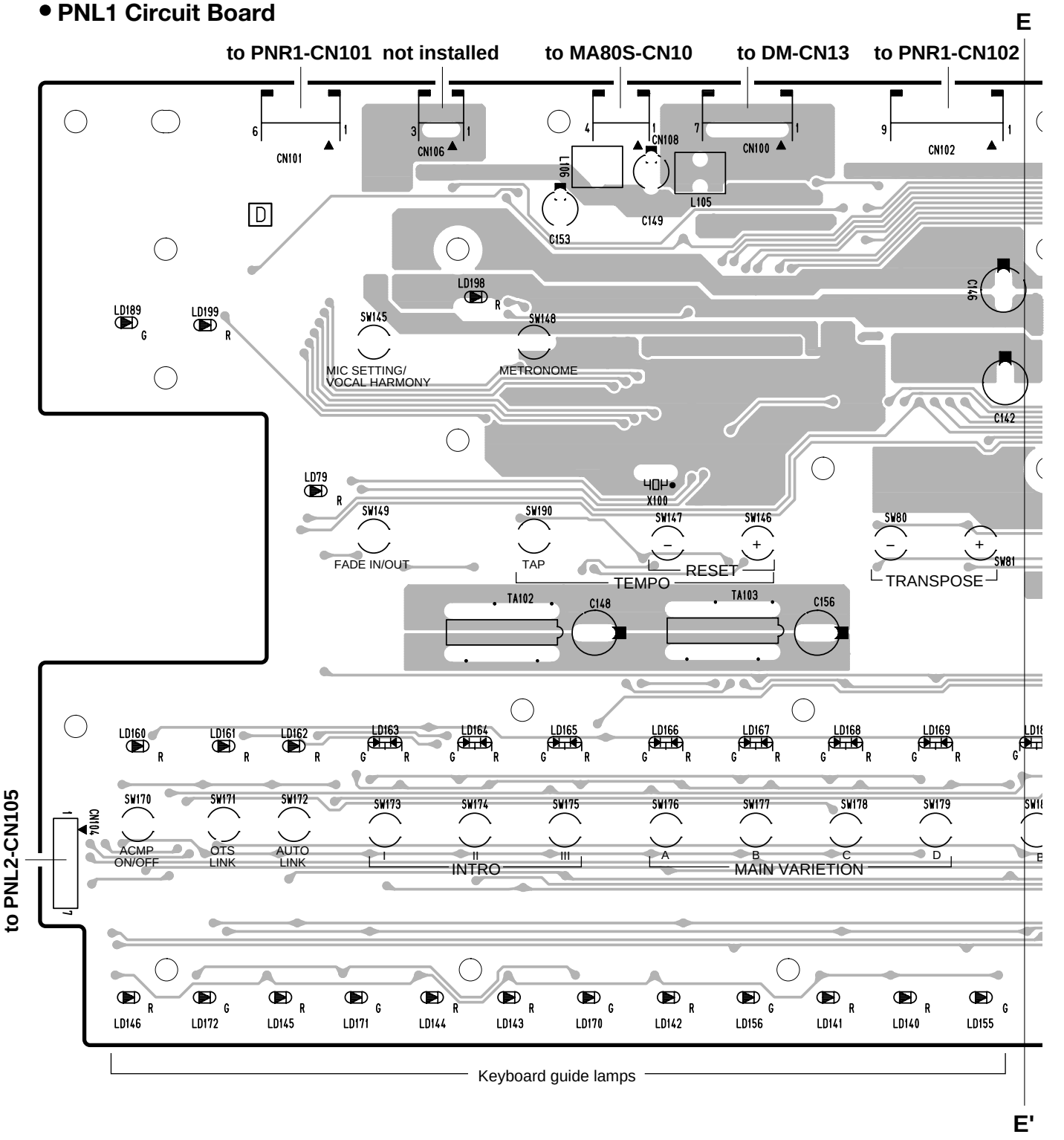

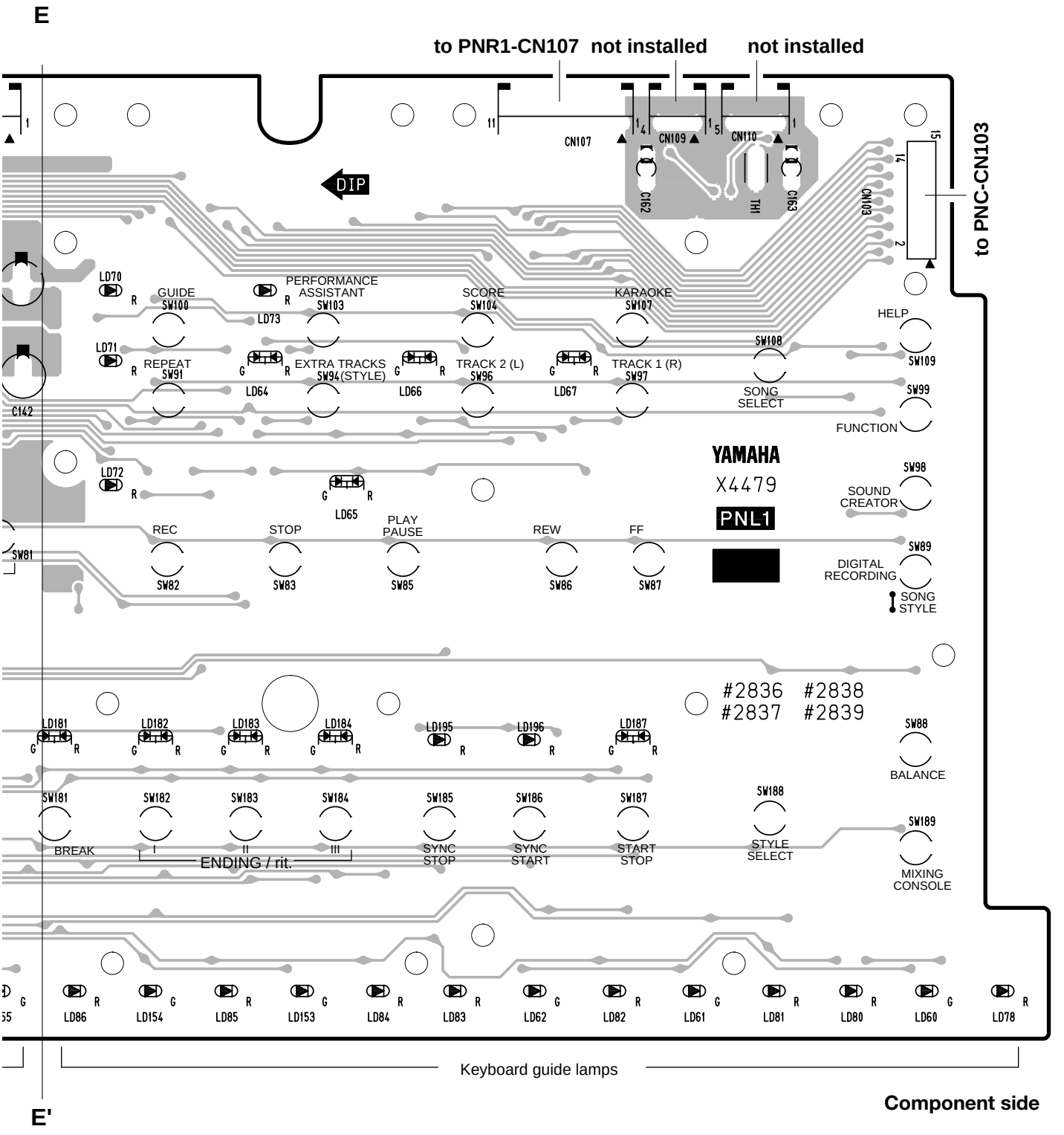
E
to PNR1-CN107
not installed
not installed
to PNC-CN103
CN107
CN109
CN110
CN103
C162
TH1
C163
DIP
LD70
GUIDE
SW100
PERFORMANCE ASSISTANT
SW103
LD73
SCORE
SW104
KARAOKE
SW107
HELP
SW109
LD71
REPEAT
SW91
EXTRA TRACKS (STYLE)
SW94
LD64
TRACK 2 (L)
SW96
LD66
TRACK 1 (R)
SW97
LD67
SW108
SONG SELECT
SW99
FUNCTION
C142
YAMAHA
X4479
PNL1
LD72
LD65
SW98
SOUND CREATOR
REC
STOP
PLAY PAUSE
REW
FF
SW81
SW82
SW83
SW85
SW86
SW87
SW89
DIGITAL RECORDING
SONG STYLE
#2836 #2838
#2837 #2839
LD181
LD182
LD183
LD184
LD195
LD196
LD187
SW88
BALANCE
SW181
SW182
SW183
SW184
SW185
SW186
SW187
SW188
SW189
BREAK
I
II
III
ENDING / rit.
SYNC STOP
SYNC START
START STOP
STYLE SELECT
MIXING CONSOLE
LD86
LD154
LD85
LD153
LD84
LD83
LD62
LD82
LD61
LD81
LD80
LD60
LD78
Keyboard guide lamps
E'
Component side

• PNL1 Circuit Board

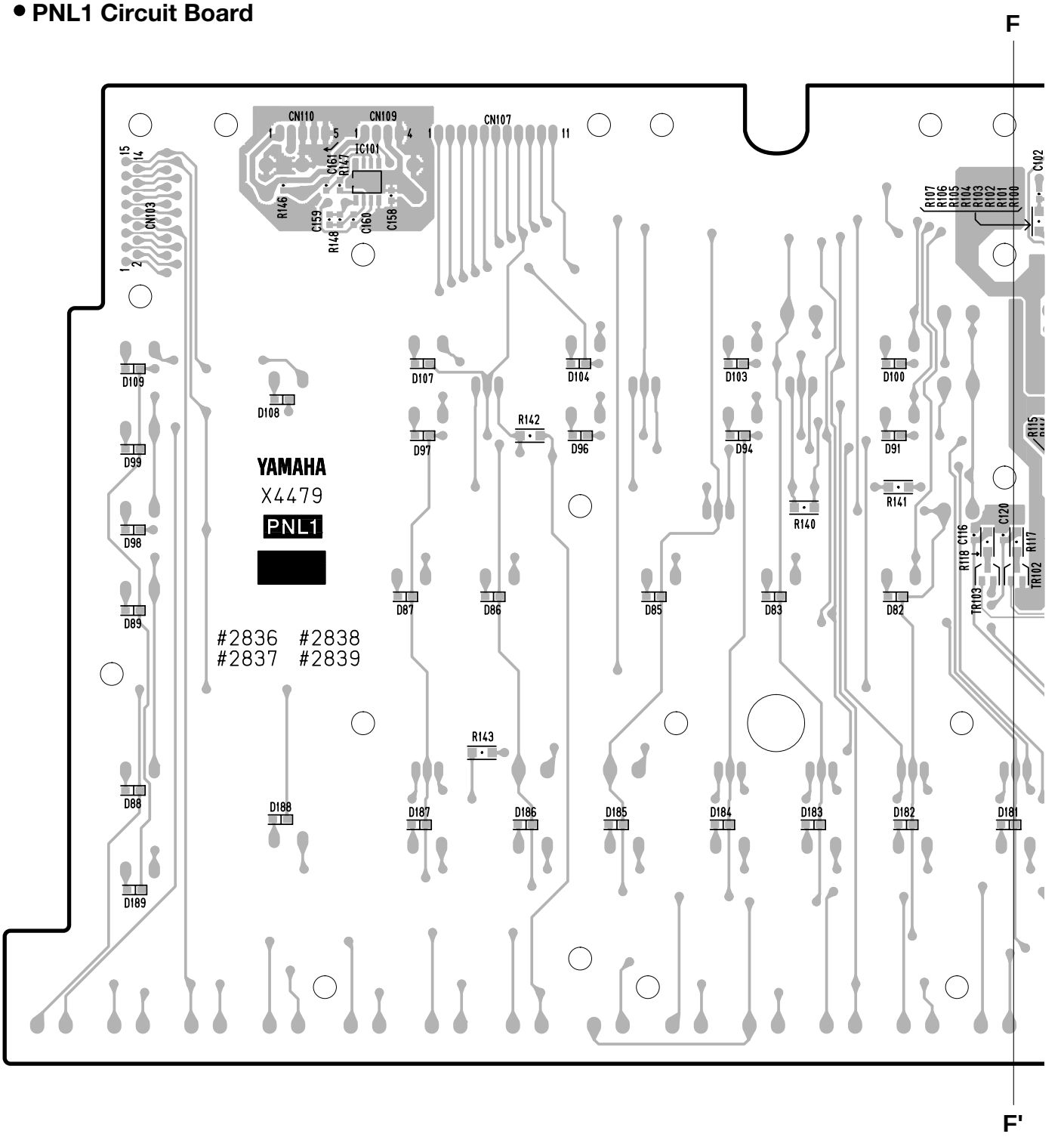

F

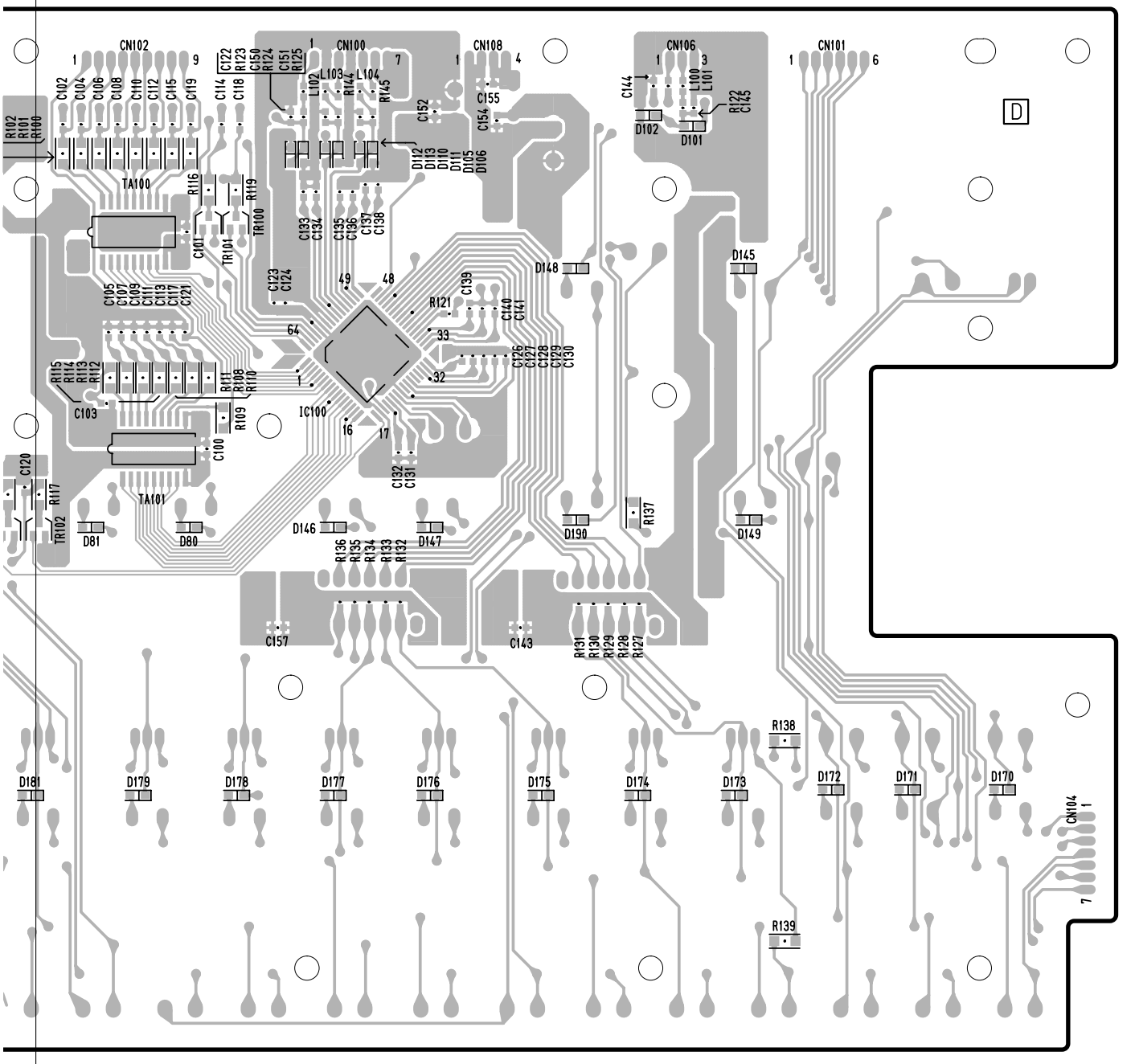

F'

Pattern side

• PNR1 Circuit Board

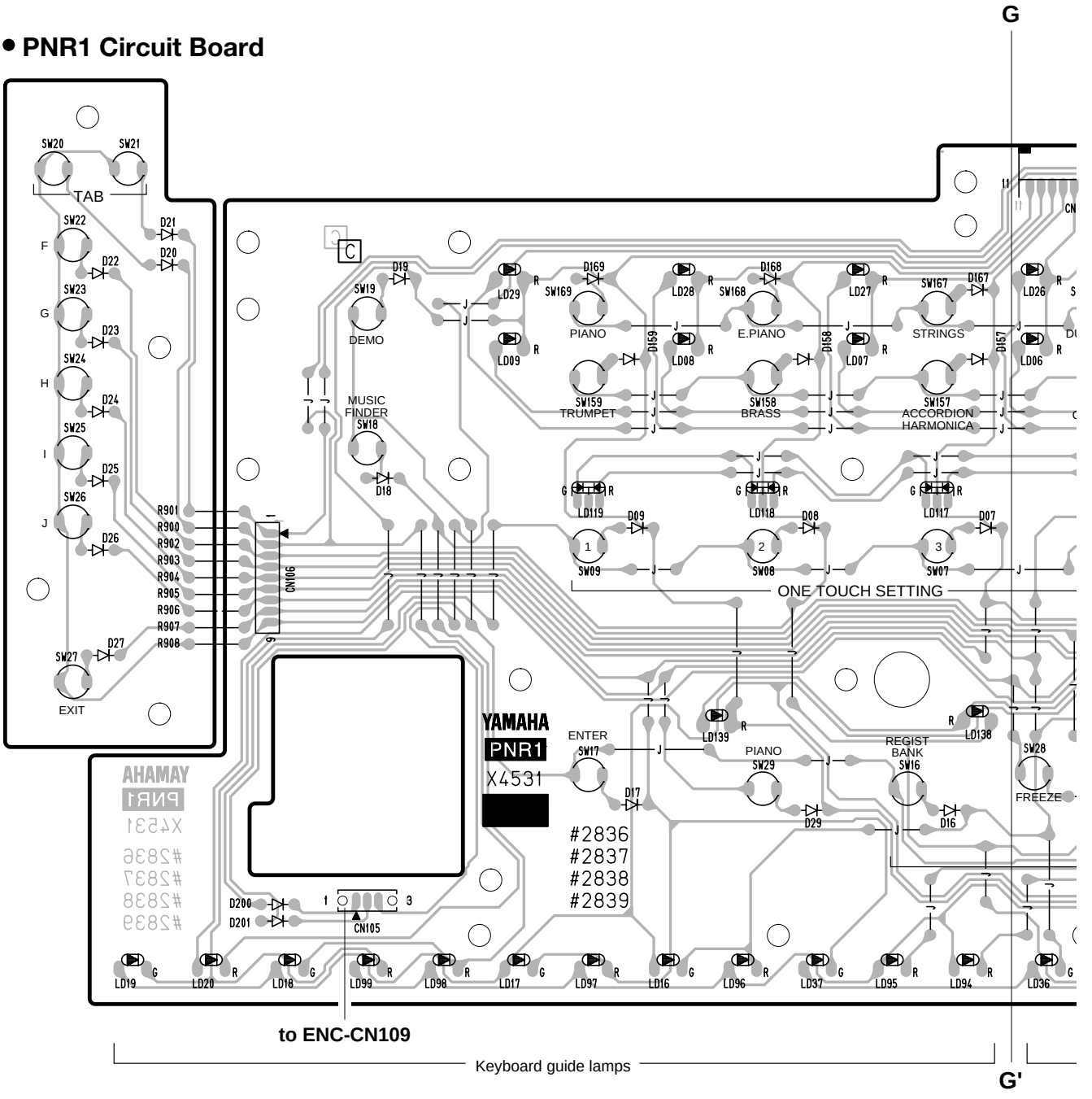

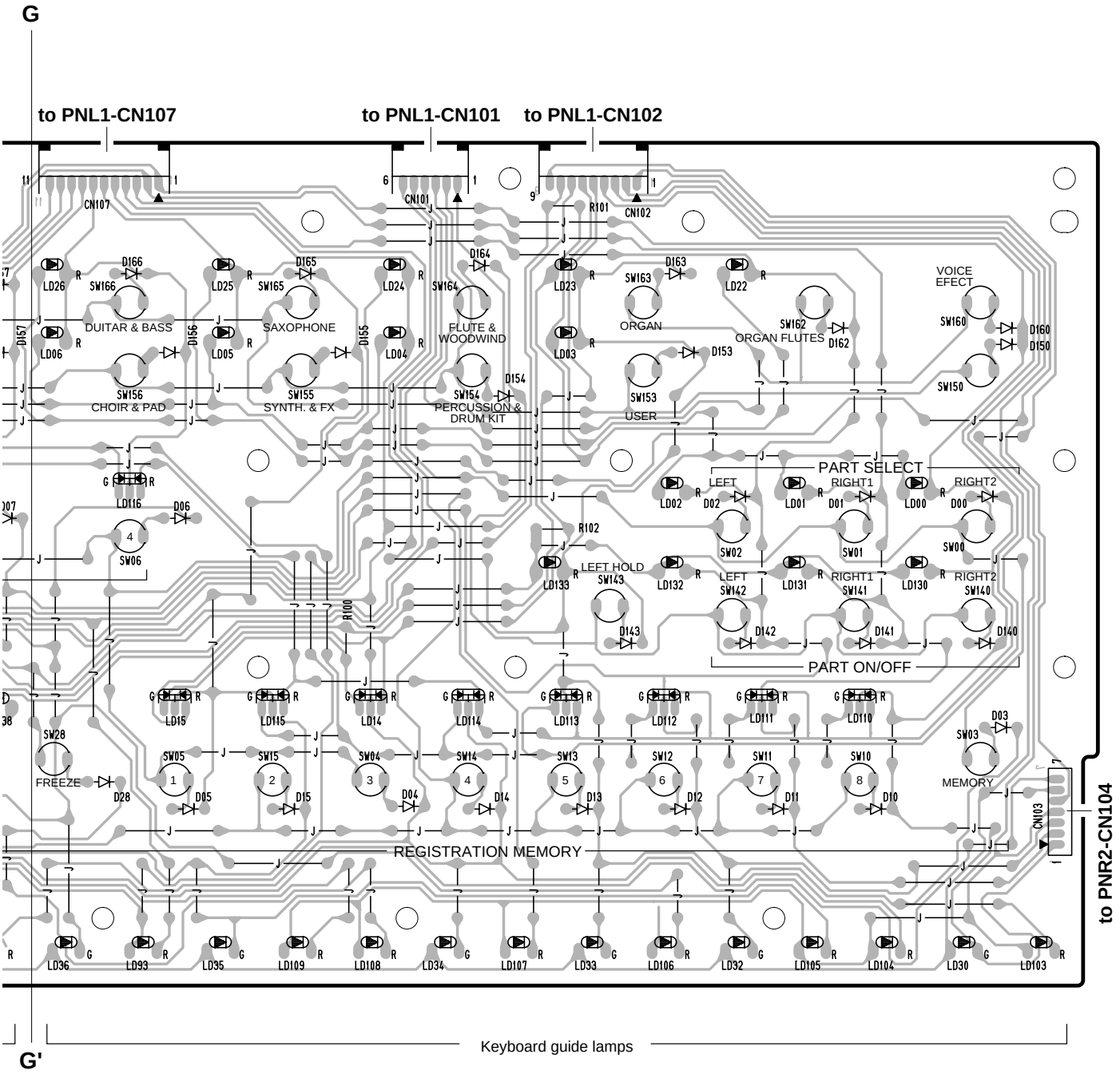

Component side

• PNL2 Circuit Board

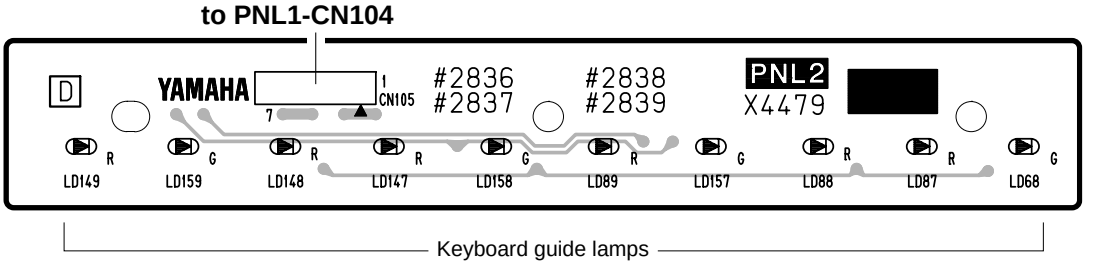

Component side

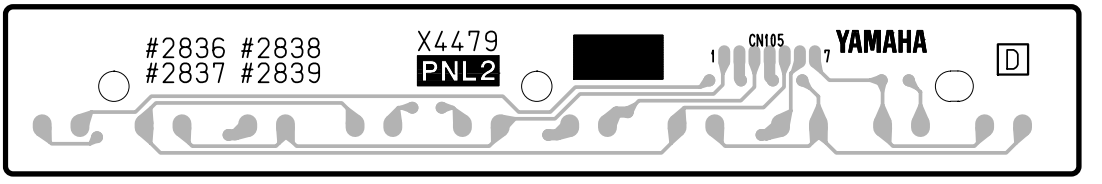

Pattern side

• PNR2 Circuit Board

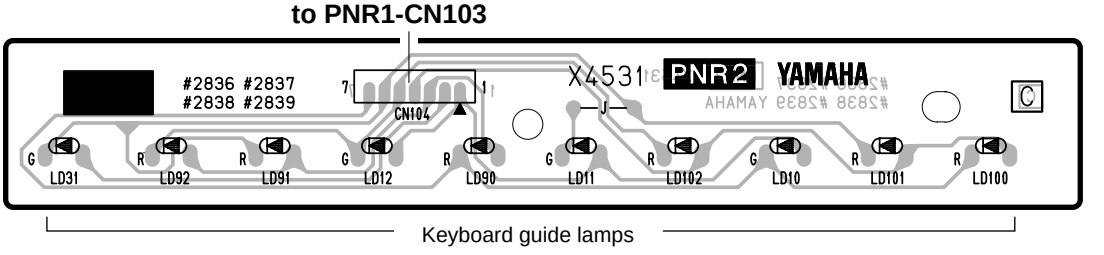

Component side

• SM Circuit Board

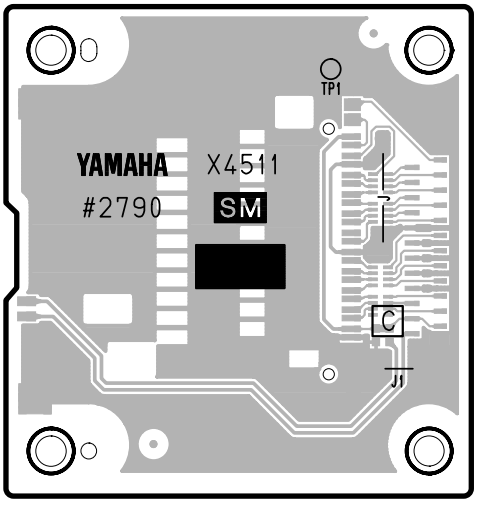

Component side

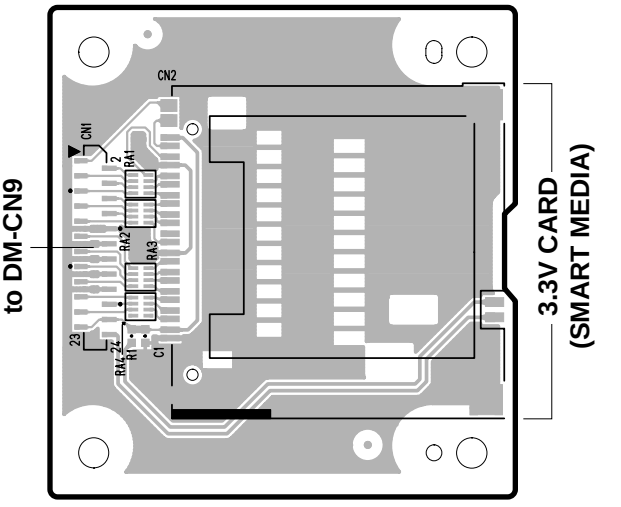

Pattern side

PNL2: 2NA-WB94120 △2
PNR2: 2NA-WB94150 △1
SM: 2NA-WB70390 △2

• PEDAL (SW) Circuit Board

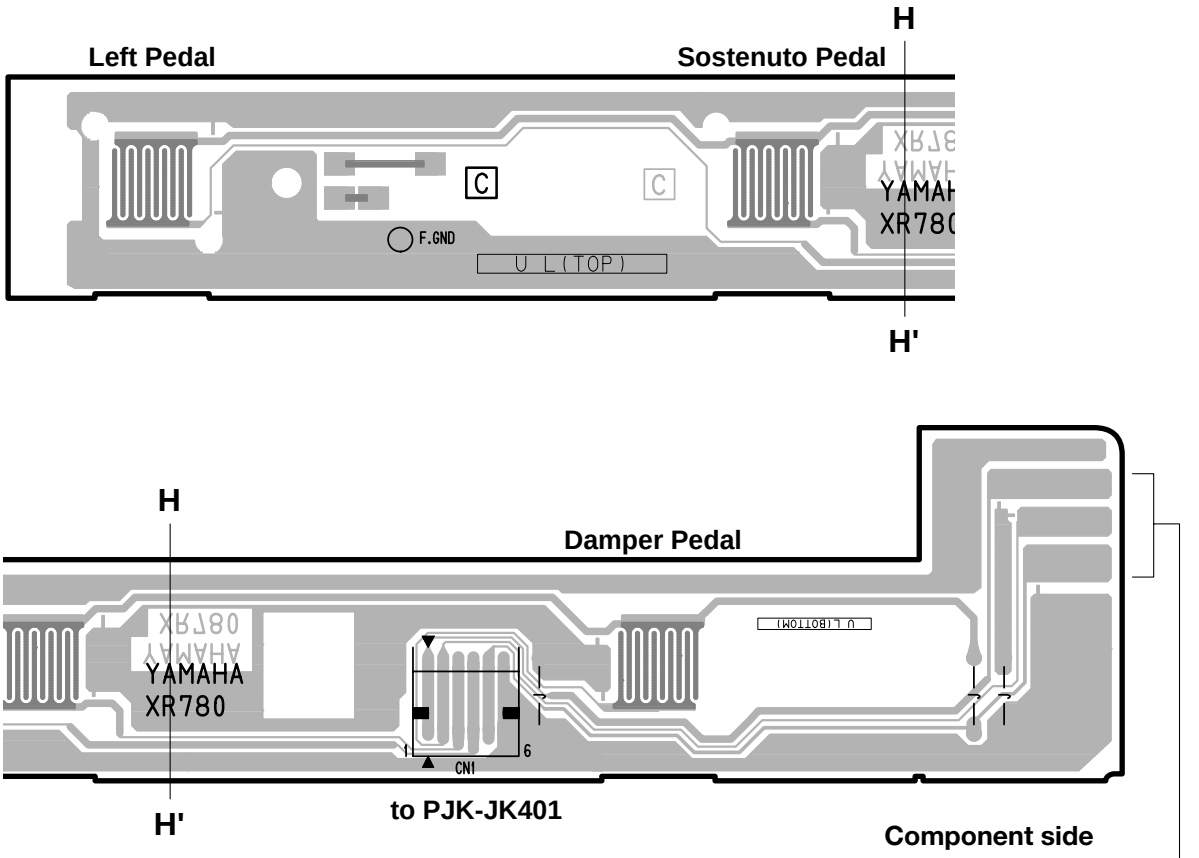

• PEDAL VR Circuit Board



PEDAL(SW), PEDAL VR: 2NA-V233730 /1

TEST PROGRAM

✻ If you execute the test No. 88, Factory Set, data on Internet settings may be lost.

1 Measurement conditions

1-1: Measuring instruments

· Level meter (with a JIS-C filter)

· Frequency counter

Note: Connect a stereo plug to the [PHONES] jack (L/Rch: 33ohms).

1-2: Jigs

Microphone, Foot pedal, MIDI cable, USB cable (A type−B type), Floppy disk, Smart Media.

2 How to enter the Test Program

Press the power switch on the keyboard while pressing and holding the [C2#], [F2], and [G2#] (C2# major code).

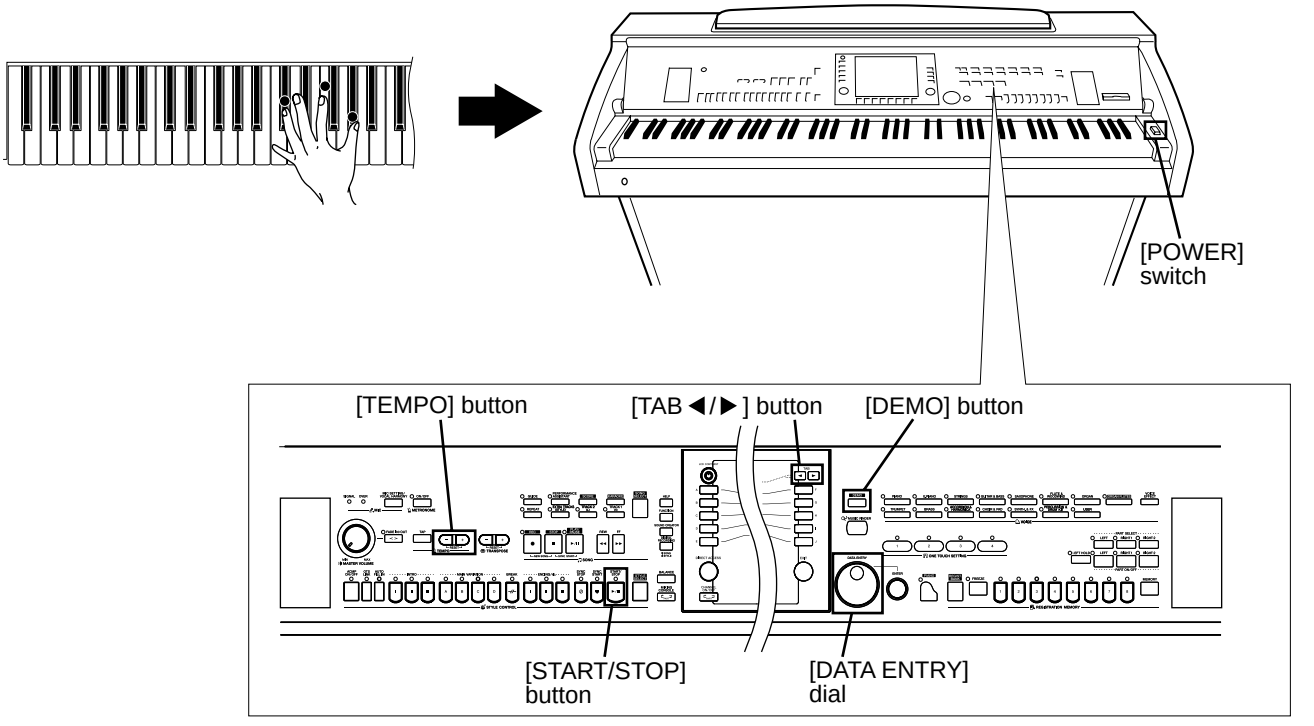

2-1: How to proceed the test

1) When the test program is activated, the sign "**TEST**" is indicated on the LCD display.
2) Go to item choosing mode with [TEMPO −]/[TEMPO +] button or [DATA ENTRY] dial.
3) Press the [START/STOP] button to execute testing.

- **If the result is successful.**

  In the acceptable selection screen, an asterisk (✶) will be displayed at the head, so that you can see later if it has already been checked.

  If the result is successful, you can return to the selection screen with [START/STOP] button, [DEMO] button or the Lowest Note.

- **If the result is unacceptable.**

  If the result is unacceptable, you can return to the selection screen with [DEMO] button or the Lowest Note.

To return to the last item, press [TEMPO −] button or turn counterclockwise the [DATA ENTRY] dial at the head of items.

3 Test program list

Test No.	LCD display	Test descriptions, judging conditions, etc.
1	**001 : Version**	Displays model name, designated country information and each ROM version (***.****). **Model Name : CVP-303 (E)** **Main Program : *.**** **BitMap : *.**** **Contents1 : *.**** **Contents2 : *.**** **Wave1 : *.**/*.****
2	**002 : ROM Check1**	Checks ROM (simplified check). Check ROMs (IC21, 22) connected to CPU bus. Confirm that "**ROM Check1 OK**" is displayed on LCD. If the result is unacceptable. **Main Program : NG** **Contents1 : NG** **Contents2 : NG** **LCD Patch1 : NG** **LCD BitMap : NG** **JFONT : NG** **WNN : NG**
3	**003 : RAM Check1**	Checks RAM (simplified check). Check RAMs (IC19, 20) connected to CPU bus. Confirm that "**RAM Check1 OK**" is displayed on LCD. If the result is unacceptable, "**Main Program RAM NG**" is displayed on LCD.
4	**004 : Flash Check1**	Checks flash memory (simplified check). Check flash memory (IC18) connected to CPU bus. Confirm that "**Flash Check1 OK**" is displayed on LCD. It will take about 20 seconds before the test is over. If the result is unacceptable, "**Flash Check1 NG**" is displayed on LCD.
5	**005 : Wave ROM Check1**	Checks Wave ROMs (IC42, 43, 52, 53) (simplified check). Confirm that "**Wave ROM Check OK**" is displayed on LCD. If the result is unacceptable, "**Wave ROM1 Check NG**" is displayed on LCD.
6	**006 : Effect RAM Check1**	Checks Effect RAM (IC34) (simplified check). Confirm that "**Effect Check TG1 OK**" is displayed on LCD. If the result is unacceptable, "**Effect Check TG1 NG**" is displayed on LCD.
7	**007 : TG 1 Check**	Checks sound source 1. **DM circuit board** and **SWP50 (IC35)** are checked while sound is produced. Check sound source and sound production by producing sound from the low range of keyboard that can produce sound while switching sequentially the sound producing channels of the sound source with the default tone as a sine wave. Check the voice sound by hearing that there is not unusual noise or abnormal sound. Sound production stops as the check for the number of sound producing channels is over. Sound producing keyboard range includes 32 sounds from C2 to G4. The number of sounds produced is 64. "**TG 1 END**" will appear when the check is over.
14	**014 : Pitch Check**	Checks Pitch. Pitch Accuracy Check: Connect the frequency counter to L or R of [PHONE] jack. Sound is produced with 441.4±0.2Hz sine wave at a specified level, PAN=center. Sound production stops when returning to selection screen with the [START/STOP] button.

Test No.	LCD display	Test descriptions, judging conditions, etc.
15	**015 : Output R Check**	Checks Output Level R. Sound is produced with the sine wave of about 1046 Hz (C5) at a specified level, PAN=R. Check if sound is produced at the specified level. Connect the level meter (with a JIS-C filter) to each jack (PHONES L, R, AUX OUT L/L+R, R, AUX OUT (LEVEL FIXED) L, R) With [MASTER VOLUME] at the maximum, check the R channel output level. (about 1046Hz sine wave, PAN=R) (PHONES L, R: 33 ohms load AUX OUT L/L+R, R: 10k ohms load AUX OUT (LEVEL FIXED) L, R: 10k ohms load) · PHONES L: −33.5dBu or less PHONES R: +6.5dBu · AUX OUT L: −50.0dBu or less AUX OUT R: +10.0dBu · AUX OUT (LEVEL FIXED) L: −56.0dBu or less AUX OUT (LEVEL FIXED) R: +4.0dBu
16	**016 : Output L Check**	Checks Output Level L. Sound is produced with the sine wave of about 1046 Hz (C5) at a specified level, PAN=L. Check if sound is produced at the specified level. Connect the level meter (with a JIS-C filter) to each jack (PHONES L, R, AUX OUT L/L+R, R, AUX OUT (LEVEL FIXED) L, R) With [MASTER VOLUME] at the maximum, check the L channel output level. (about 1046Hz sine wave, PAN=L) (PHONES L, R: 33 ohms load AUX OUT L/L+R, R: 10k ohms load AUX OUT (LEVEL FIXED) L, R: 10k ohms load) · PHONES L: +6.5dBu PHONES R: −33.5dBu or less · AUX OUT L: +10.0dBu AUX OUT R: −50.0dBu or less · AUX OUT (LEVEL FIXED) L: +4.0dBu AUX OUT (LEVEL FIXED) R: −56.0dBu or less
19	**019 : EQ Low Check**	Checks EQ-LOW frequency. Sound is produced from MAIN L/R with a sine wave of about 65.4 Hz (C1) at specified level, PAN=center. +1.5dBu: EQ Circuit Board *CN2 (1-2, 3-4) Sound production stops when returning to selection screen with the [START/STOP] button.
20	**020 : EQ Mid Check**	Checks EQ-MID frequency. Sound is produced from MAIN L/R with a sine wave of about 523 Hz (C4) at specified level, PAN=center. −6.5dBu: EQ Circuit Board *CN2 (1-2, 3-4) Sound production stops when returning to selection screen with the [START/STOP] button.
21	**021 : EQ High Check**	Checks EQ-HIGH frequency. Sound is produced from MAIN L/R with a sine wave of about 4186 Hz (C7) at specified level, PAN=center. −5.0dBu: EQ Circuit Board *CN2 (1-2, 3-4) Sound production stops when returning to selection screen with the [START/STOP] button.
22	**022 : SP MUTE Check**	Checks SP MUTE. Sound is produced with about 1046Hz (C5) sine wave at a specified level, PAN=center. Repeat sound production (MUTE OFF) and stop (MUTE ON) by pressing the [TAB ◀] button and [TAB ▶] button, respectively. Verify that SP MUTE relay is not stuck.
23	**023 : MUTE Check**	Checks MUTE. Sound is produced with about 1046Hz (C5) sine wave at a specified level, PAN=center. Repeat sound production (MUTE OFF) and stop (MUTE ON) by pressing the [TAB ◀] button and [TAB ▶] button, respectively. Verify that MUTE relay is not stuck.
25	**025 : MIC Check**	Checks a microphone. Connect a microphone to [MIC] jack. "**MIC Inserted**" is displayed at the bottom of LCD when MIC is inserted. "**MIC NOT Inserted**" is displayed at the bottom of LCD when MIC is not inserted. Speak to MIC to check the voice sound by hearing that there is not unusual noise or abnormal sound. Check if insertion and removal of MIC can be detected by switching MIC insertion and removal. MIC level: Connect the level meter (with a JIS-C filter) to L and R of [PHONES] jacks. (33 ohms load) Set the [MASTER VOLUME] at the maximum. Measure the output of each terminal after inputting a sine wave of 1 kHz at −50dBu to [MIC] jack. Set [MIC./LINE IN] select switch to [MIC.] and set [MIC VOLUME] at the maximum. PHONES L,R : +4.0±2dBu

*CN2 1: L 2: GND 3: R 4: GND

Test No.	LCD display	Test descriptions, judging conditions, etc.
27	**027 : SW, LED Check**	Checks SW LED. Turn on sequentially all the panel switches displayed on LCD using caution not to press two switches at a time. When a switch is pressed, a switch code is displayed on LCD. When a panel switch is turned on, a sine wave sound is produced at a sound scale in the switch test sequence table (See page 57). If the switch has an LED, it lights up. It goes out when a next correct switch is turned on. When all the switches are finished, confirm with down-and-up actions detection of [DATA ENTRY] dial. If a switch is pressed which is not specified, a corresponding sound is produced. If the test is successful, you can go to the selection screen, using [START/STOP] button. Pressing the [DEMO] button ends the check. (It is effective after [DEMO] button test is over.) Confirm that "**SW, LED Check OK**" is displayed on LCD. "**NG**" is displayed when a switch other than specified is pressed. "**Over Two Sw**" is displayed when plural switches are pressed.
28	**028 : All Panel LED On Check**	Checks all the panel LEDs' lighting up. All the panel LED's will light up. LED is divided into blocks and lighting is switched from one block to another every time [TAB ◄ ►] button is pressed. When this test is over, LED goes out. Press the [START/STOP] button to complete testing.
29	**029 : Red LED On Check**	Checks all the red panel LEDs' lighting up. All the red LED's will light up. LED is divided into blocks and lighting is switched from one block to another every time [TAB ◄ ►] button is pressed. When this test is over, LED goes out. Press the [START/STOP] button to complete testing.
30	**030 : Green LED On Check**	Checks all the green panel LEDs' lighting up. All the green LED's will light up. LED is divided into blocks and lighting is switched from one block to another every time [TAB ◄ ►] button is pressed. When this test is over, LED goes out. Press the [START/STOP] button to complete testing.
32	**032 : Keyboard LED Check**	Checks all the keyboard guide LEDs' lighting up. All the keyboard guide LED's will light up. When this test is over, LED goes out. Press the [START/STOP] button to complete testing.
33	**033 : All LCD On Check**	Checks all LCDs' lighting up. Confirm that all the LCD dots turn into blue.
34	**034 : All LCD Off Check**	Checks all LCDs' going out. Confirm that all the LCD dots turn into white.
36	**036 : LCD Brightness Check**	Checks LCD brightness. LCD brightness will vary as REGIST 1, 2, 3, and 4 are pressed in sequence. "**LCD Brightness**" is displayed when the test is over.
42	**042 : Soft Pedal Check** (Left pedal check)	Checks Soft Pedal (Left). When pressing the pedal, "**Soft Test Start**" is displayed and the C3 note is output. Releasing the pedal, confirm that "**Soft Test OK**" is displayed and the C4 note is output.
43	**043 : Sostenute Pedal Check**	Checks Sostenute Pedal. When pressing the pedal, "**Sostenute Test Start**" is displayed and the C3 note is output. Releasing the pedal, confirm that "**Sostenute Test OK**" is displayed and the C4 note is output.
44	**044 : Damper Pedal Check**	Checks Damper Pedal. When pressing the pedal, "**Damper Test Start**" is displayed and the C3 note is output. Releasing the pedal, confirm that "**Damper Test OK**" is displayed and the C4 note is output.
45	**045 : AUX Pedal Check**	Checks AUX Volume Pedal. Connect a foot pedal to [AUX PEDAL] jack. The C3 note is output when pressing the pedal to maximum and the G3 note is output when pressing it to minimum. Then the C4 note is output when removing the pedal from the [AUX PEDAL] jack. When removing the jack, confirm that "**Aux Pedal Check OK**" is displayed on LCD.

Test No.	LCD display	Test descriptions, judging conditions, etc.
53	**053 : MIDI Check**	Checks MIDI. After connecting the [MIDI IN] terminal and [MIDI OUT] terminal with a MIDI cable, execute the test. Confirm that the C4 note is output and "**MIDI Check OK**" is displayed on LCD. Remove the MIDI cable when the test is over.
57	**057 : USB to Device/Host Check**	Checking [USB TO DEVICE] terminal and [USB TO HOST] terminal simultaneously. Press the [START/STOP] button first. "**Connect USB to Device and to Host**" will appear on LCD. When USB cable is connected to [USB TO DEVICE] terminal and [USB TO HOST] terminal, "**USB to Device/Host1 Check OK**" will appear on LCD, immediately followed by "**Connect USB Storage Device**". Pull USB cable off [USB TO DEVICE] terminal and [USB TO HOST] terminal and connect USB cable of FDD to [USB TO DEVICE] terminal. Confirm that "**USB to Device/Host Check OK**" is displayed on LCD.
58	**058 : USB Storage Device Check**	Tests if USB Storage devices can be used. 1. Connect FDD to [USB TO DEVICE] terminal and insert a floppy disk. When no disk is inserted, "**NO DISK**" will be displayed on LCD. 2. Conduct 10-sector read/write test. 3. Read every 100 sectors from 0 sector. 4. Compare with data after sector writing to confirm agreement. Use also for testing compatibility with USB Storage devices and testing FDD in the same package (U, E, B models). Confirm that "**USB Storage Device Check OK**" is displayed on LCD.
59	**059 : CARD Check**	Checks Card. Insert the formatted Smart Media (Card), paying attention to the inserting direction (Gold side is downward). 1. Conduct 10-sector read/write test. 2. Read every 100 sectors from 0 sector. 3. Compare with data after sector writing to confirm agreement. "**NO CARD**" will be displayed when test is started without a card inserted. Confirm that "**CARD OK**" is displayed on LCD. Pull off the CARD and press the [START/STOP] button to compete the checking.
61	**061 : KeyboardType Check**	Determines if the appropriate keyboard is connected. Keyboard type currently connected is displayed. Confirm that "**Keyboard Type Check OK (GHD)**" is displayed on LCD.
67	**067 : ROM Check2**	Test for factory inspection.
68	**068 : RAM Check2**	Test for factory inspection.
69	**069 : Flash Check2**	Test for factory inspection.
70	**070 : Wave ROM Check2**	Test for factory inspection.
71	**071 : Effect RAM Check2**	Test for factory inspection.
88	**088 : Factory Set**	**If you execute the Factory Set, data on Internet settings may be lost.** At the next time of turning on power, data are set to FlashROM to be in factory default. Here, a flag for initialization is set (only when necessary). Execution is made at the next time of turning on power.
89	**089 : Test Exit**	Exists from the test program and reenters into the play mode after executing the test.

• Inspections of the others

AUX IN

Check that each terminal output is as shown in the table below when a signal is inputted into AUX IN.

INPUT \ OUTPUT	AUX OUT (10KΩ load)		PHONES (33Ω load)	
	L	R	L	R
AUX IN L/L+R: sine wave 1kHz, 0dBu R: no signal	+3.0dBu	−67.0dBu or less	−1.0dBu	−41.0dBu or less
AUX IN L/L+R: no signal R: sine wave 1kHz, 0dBu	−67.0dBu or less	+3.0dBu	−41.0dBu or less	−1.0dBu

Switch Test Sequence

Turn	SW Name/Display	LED made to turn on	Note number
1	MC.SETTING	–	C2
2	METRONOME	METRONOME	C#2
3	GUIDE	GUIDE	D2
4	PERFORMANCE ASSISTANT	PERFORMANCE ASSISTANT	D#2
5	SCORE	MIC SIGNAL	E2
6	KARAOKE	MIC OVER	F2
7	SONG SELECT	–	F#2
8	REPEAT	REPEAT	G2
9	EXTRA TRACKS (STYLE)	EXTRA TRACKS (STYLE)	G#2
10	TRACK2	TRACK2	A2
11	TRACK1	TRACK1	A#2
12	FADE IN/OUT	FADE IN/OUT	B2
13	TAP TEMPO	–	C3
14	TEMPO–	–	C#3
15	TEMPO+	–	D3
16	TORANSPOSE–	–	D#3
17	TORANSPOSE+	–	E3
18	REC	REC	F3
19	STOP	–	F#3
20	PLAY/PAUSE	PLAY/PAUSE	G3
21	REW	–	G#3
22	FF	–	A3
23	ACMP. ON/OFF	ACMP. ON/OFF	A#3
24	OTS LINK	OTS LINK	B3
25	AUTO FILL IN	AUTO FILL IN	C4
26	INTRO 1	INTRO 1(RED, GREEN)	C#4
27	INTRO 2	INTRO 2(RED, GREEN)	D4
28	INTRO 3	INTRO 3(RED, GREEN)	D#4
29	MAIN A	MAIN A(RED, GREEN)	E4
30	MAIN B	MAIN B(RED, GREEN)	F4
31	MAIN C	MAIN C(RED, GREEN)	F#4
32	MAIN D	MAIN D(RED, GREEN)	G4
33	BREAK	BREAK(RED, GREEN)	G#4
34	ENDING 1	ENDING 1(RED, GREEN)	A4
35	ENDING 2	ENDING 2(RED, GREEN)	A#4
36	ENDING 3	ENDING 3(RED, GREEN)	B4
37	SYNC STOP	SYNC STOP	C5
38	SYNC START	SYNC START	C#5
39	START/STOP	START/STOP(RED, GREEN)	D5
40	STYLE SELECT	–	D#5
41	HELP	–	E5
42	FUNCTION	–	F5
43	SOUND CREATER	–	F#5
44	DIGITAL RECORDING	–	G5
45	BALANCE	–	G#5
46	MIXING CONSOLE	–	A5
47	A	–	A#5
48	B	–	B5
49	C	–	C6
50	D	–	C2
51	E	–	C#2
52	DIRECT ACCESS	–	D2
53	CHANNEL ON/OFF	–	D#2
54	1-U	–	E2
55	2-U	–	F2
56	3-U	–	F#2
57	4-U	–	G2
58	5-U	–	G#2
59	6-U	–	A2
60	7-U	–	A#2

Turn	SW Name/Display	LED made to turn on	Note number
61	8-U	–	B2
62	1-L	–	C3
63	2-L	–	C#3
64	3-L	–	D3
65	4-L	–	D#3
66	5-L	–	E3
67	6-L	–	F3
68	7-L	–	F#3
69	8-L	–	G3
70	TAB ◄	–	G#3
71	TAB ►	–	A3
72	F	–	A#3
73	G	–	B3
74	H	–	C4
75	I	–	C#4
76	J	–	D4
77	EXIT	–	D#4
78	DEMO	–	E4
79	PIANO	PIANO	F4
80	E.PIANO	E.PIANO	F#4
81	STRINGS	STRINGS	G4
82	GUITAR & BASS	GUITAR & BASS	G#4
83	SAXOPHONE	SAXOPHONE	A4
84	FLUTE & WOODWIND	FLUTE & WOODWIND	A#4
85	ORGAN	ORGAN	B4
86	ORGAN FLUTES	ORGAN FLUTES	C5
87	VOICE EFFECT	–	C#5
88	TRUMPET	TRUMPET	D5
89	BRASS	BRASS	D#5
90	ACCORDION & HARMONICA	ACCORDION & HARMONICA	E5
91	CHOIR & PAD	CHOIR & PAD	F5
92	SYNTH. & FX	SYNTH. & FX	F#5
93	PERC. & DRUM KIT	PERC. & DRUM KIT	G5
94	USER	USER	G#5
95	MUSIC FINDER	–	A5
96	OTS1	OTS1(RED, GREEN)	A#5
97	OTS2	OTS2(RED, GREEN)	B5
98	OTS3	OTS3(RED, GREEN)	C6
99	OTS4	OTS4(RED, GREEN)	C2
100	PART SELECT LEFT	PART SELECT LEFT	C#2
101	PART SELECT R1	PART SELECT R1	D2
102	PART SELECT R2	PART SELECT R2	D#2
103	LEFT HOLD	LEFT HOLD	E2
104	PART ON/OFF LEFT	PART ON/OFF LEFT	F2
105	PART ON/OFF R1	PART ON/OFF R1	F#2
106	PART ON/OFF R2	PART ON/OFF R2	G2
107	ENTER	–	G#2
108	PIANO SW	PIANO SW	A2
109	REGIST. BANK	–	A#2
110	FREEZE	FREEZE	B2
111	REGIST. 1	REGIST. 1(RED, GREEN)	C3
112	REGIST. 2	REGIST. 2(RED, GREEN)	C#3
113	REGIST. 3	REGIST. 3(RED, GREEN)	D3
114	REGIST. 4	REGIST. 4(RED, GREEN)	D#3
115	REGIST. 5	REGIST. 5(RED, GREEN)	E3
116	REGIST. 6	REGIST. 6(RED, GREEN)	F3
117	REGIST. 7	REGIST. 7(RED, GREEN)	F#3
118	REGIST. 8	REGIST. 8(RED, GREEN)	G3
119	MEMORY	–	G#3

VERSION UPGRADE

Download the version upgrade program from the Yamaha official website.

● List of the updating Flash ROM

CVP-303/M/C	Main Program	DM	IC21

● File name

· CVP-303inst.prg
· CVP-303mainprg1.prg
· CVP-303mainprg2.prg
· CVP-303mainprg3.prg
· CVP-303mainprg4.prg

● How to Install

⚠ Never turn the instrument off while installing.
It may break the boot Flash ROM device.To repair it, you have to exchange the Flash ROM on board.
Never take the smartmedia from the instrument while installing.

1 Insert Smartmedia to the instrument.

⚠ Please take care about the side of the media. Gold side is downward.

2 Boot the instrument with install mode.

Turn on the instrument with pressing [START/STOP] button.

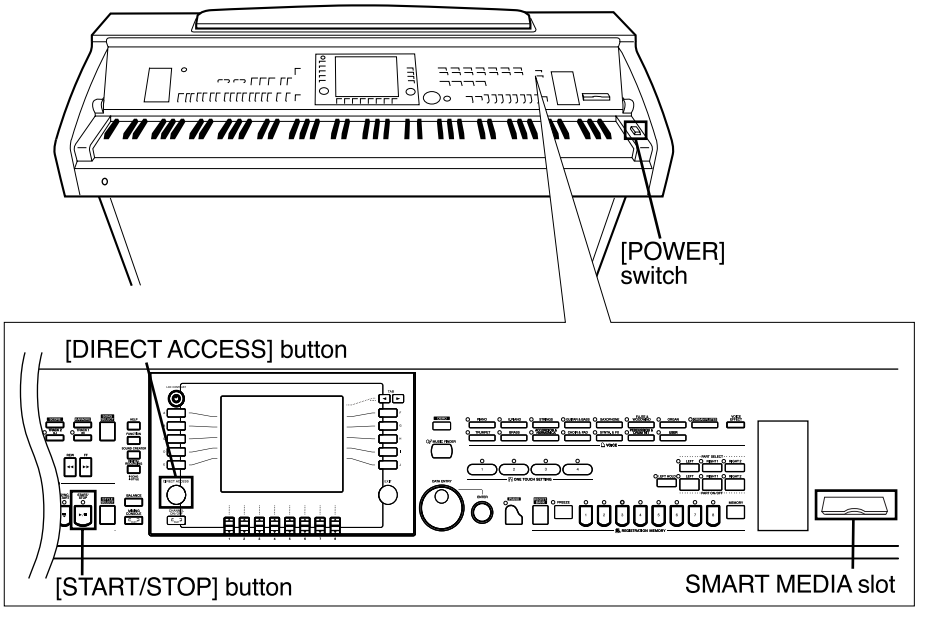

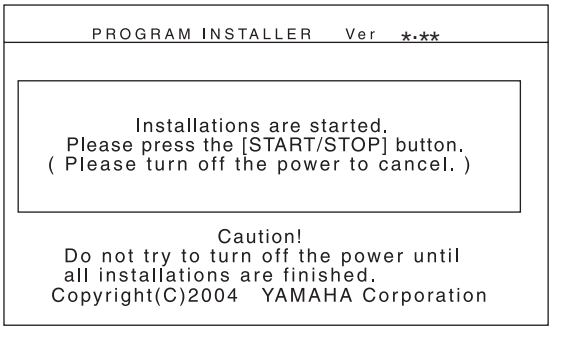

1 Press the [START/STOP] button and start the installations.

2 Then, the installation starts automatically.

3 It shows the following on LCD during installations.

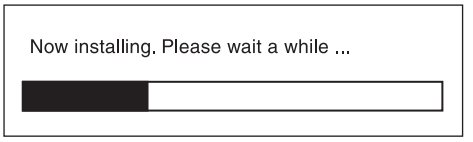

4 Finish the installations, then it shows the following message on LCD.

Success:

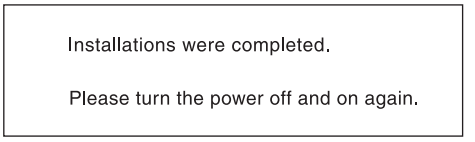

Failure:



5 Turn off the power supply of the instrument.

Please refer to the error message table (page 60) if it will show an error message on LCD.

3 Verify the version

1 Turn on the power supply of the instrument with pressing the [DIRECT ACCESS] switch simultaneously.

2 Version display mode starts.

3 Check that the version of Main Program on LCD is in agreement with the version of install data.

4 Check that all items are set to OK.

5 If it checks that it is satisfactory, turn off the power supply of the instrument.

The version display on LCD.

● **CVP-303**

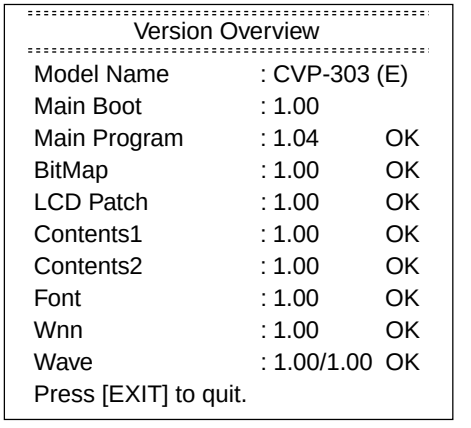

4 Complete installation

The program installation is completion above.
Please refer to the trouble shootings (page 60) if an error will occur during installations.

● Trouble Shootings

Turned off the instrument while installing.
Pulling off the SmartMedia card while installing.

Please retry to install.

No information on LCD with booting install mode.

The Flash ROM may be broken.
You need to exchange the Flash ROM device on board.
To avoid this, please don't turn the instrument off while installing.

Can't execute installation using the SmartMedia which was copied by the PC.

Please check the format of the SmartMedia card.
The instrument does not support SmartMedia cards formatted in FAT32.
Please re-format the SmartMedia card in FAT format, and retry installation.

An error message is displayed on LCD.

Please refer to the following table.

<table>
<tr><th colspan="2">error message</th><th>note</th><th>to do</th></tr>
<tr><td colspan="2">Card error!</td><td>Cannot load the installation data from the smartmedia.</td><td>Please check the smartmedia if it will have been inserted exactly.

Please check the smartmedia if it will stick the dust to the face of metal.</td></tr>
<tr><td colspan="2">Install data does not exist!</td><td>Cannot recognize the smartmedia, or not exist the installation data into the smartmedia.</td><td>Please check the smartmedia if it will have been inserted exactly.
Please check the data into the smartmedia using the PC.</td></tr>
<tr><td colspan="2">Install error!</td><td>Fail to install the data.</td><td rowspan="9">Please check the data correctly into the smartmedia.
Please retry to install the data.
Please try to use the another smartmedia.</td></tr>
<tr><td rowspan="8">(Details)</td><td>E001</td><td>The boot data may be incorrect.</td></tr>
<tr><td>E002</td><td>The data size is too large.</td></tr>
<tr><td>E003</td><td>Check sum error (Reading from the smartmedia) .</td></tr>
<tr><td>E004</td><td>An error occured during to erase data.</td></tr>
<tr><td>E005</td><td>Cannot write data to the Flash ROM at the assigned address.</td></tr>
<tr><td>E006</td><td>An error occured during to write data to the Flash ROM.</td></tr>
<tr><td>E007</td><td>An error occured during to verify data into the Flash ROM.</td></tr>
<tr><td>E008</td><td>Check sum error (Writing to the Flash ROM) .</td></tr>
</table>

DATA BACKUP

You copy or save your important data to separate storage media, such as a SmartMedia card or USB storage device. This provides a convenient backup if the internal memory is damaged.

Data that can be saved

1 Song*, Style, Registration Memory Bank and Voice

2 Music Finder Record, Effect**, MIDI Template and System File

*Protected Songs (those with a Prot.1/Prot.2 indication at the upper left of the le name) cannot be saved. However, Songs with a Prot.2 indication can be moved (cut-and-paste operation (page 63)) to a SmartMedia card with ID. Songs with a Prot.1 indication cannot be moved to external media.

**Effect data includes the following:
- Edited or saved data in the Mixing Console EFFECT/EQ.
- Edited or saved data of the Vocal Harmony type.

The backup procedure is different for the data types in 1 and 2 above.

Backup procedure

Song, Style, Registration Memory Bank and Voice Data

1 Insert/connect the backup media (destination), such as a SmartMedia card or USB storage device.

2 Call up the display containing the desired le to be copied.

Song : Press the [SONG SELECT] button.
Style : Press the [STYLE SELECT] button.
Registration Memory Bank : Press the [REGIST. BANK] button.
Voice : Press one of theVOICE buttons.

3 Select the USER tab by using the TAB [◄]/[►]buttons.

4 Press the [3▼] (COPY) button to copy the le/folder (page 63).

The pop-up window for the Copy operation appears at the bottom of the display.



5 Press the [6▼] (ALL) button to select all les/folders indicated on the current display and all other pages.

To cancel the selection, press the [6▼] (ALL OFF) button again.

6 **Press the [7▼] (OK) button to con rm the le/folder selection.**

To cancel the Copy operation, press the [8▼] (CANCEL) button.

7 **Select the destination Tab (CARD or USB) to which the le/folder is to be copied, by using the TAB [◄]/[►] buttons.**

8 **Press the [4▼] (PASTE) button to paste the le/folder.**

If a message appears indicating data cannot be copied

Protected Songs (Prot. 1/Prot.2 is indicated at the upper left side of the le names) are included in the copied les. These protected Songs cannot be copied. However, Songs with a Prot.2 indication can be moved (cut-and-paste operation (page 63)) to a SmartMedia card with ID.

Music Finder Record, Effect, MIDI Template and System Data

1 **Insert/connect the backup media (destination), such as a SmartMedia card or USB storage device.**

2 **Call up the operation display.**

[FUNCTION] → [I] UTILITY → TAB[◄]/[►]SYSTEM RESET

3 **Press one of the [F]—[I] buttons to call up the relevant display for saving your data.**

4 **Select the appropriate tab (CARD or USB) to which you want to save the data by using the TAB [◄]/[►] buttons.**

5 **Save your data (page 64).**

• COPYING FILES/FOLDERS (COPY & PASTE)

This operation lets you copy a le/folder and paste it to another location (folder).

1 **Call up the display containing the le/folder you want to copy.**

2 **Press the [3▼] (COPY) button to copy the le/folder.**

The pop-up window for the Copy operation appears at the bottom of the display.



3 **Press one of the [A]—[J] buttons corresponding to the desired le/folder.**

To cancel the selection, press the same [A]—[J] button again.

■ Selecting all les/folders

Press the [6▼] (ALL) button to select all les/folders indicated on the current display including the other pages.
To cancel the selection, press the [6▼] (ALL OFF) button again.

4 **Press the [7▼] (OK) button to con rm the le/folder selection.**

To cancel the Copy operation, press the [8▼] (CANCEL) button.

5 **Select the destination tab (USER, CARD, etc.) to paste the le/folder, by using the TAB [◀]/[▶] buttons.**

6 **Press the [4▼] (PASTE) button to paste the le/folder.**

The folder/ le copied and pasted appears on the display at the appropriate position among the les in alphabetical order.

• MOVING FILES (CUT & PASTE)

This operation lets you cut a le and paste it to another location (folder).

1 **Call up the display containing the le you want to move.**

2 **Press the [2▼] (CUT) button to cut the le.**

The pop-up window for the Cut operation appears at the bottom of the display.

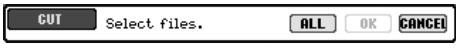

3 **Press one of the [A]—[J] buttons corresponding to the desired le.**

To cancel the selection, press the same [A]—[J] button again.

■ Selecting all les

Press the [6▼] (ALL) button to select all les indicated on the current display including the other pages.
To cancel the selection, press the [6▼] (ALL OFF) button again.

4 **Press the [7▼] (OK) button to con rm the le selection.**

To cancel the Cut operation, press the [8▼] (CANCEL) button.

5 **Select the destination tab (USER, CARD, etc.) to which the le is to be pasted, by using the TAB [◀]/[▶] buttons.**

6 **Press the [4▼] (PASTE) button to paste the le.**

The le moved and pasted appears on the display at the appropriate position among the les in alphabetical order.

• SAVING FILES

This operation lets you save your original data (such as Songs and Voices you ve created) to a le.

1 **After you ve created a Song or Voice in the relevant SONG CREATOR or SOUND CREATOR display, press the [SAVE] display button.**

The File Selection display for the corresponding data appears. Keep in mind that the Save operation is executed from the File Selection display.

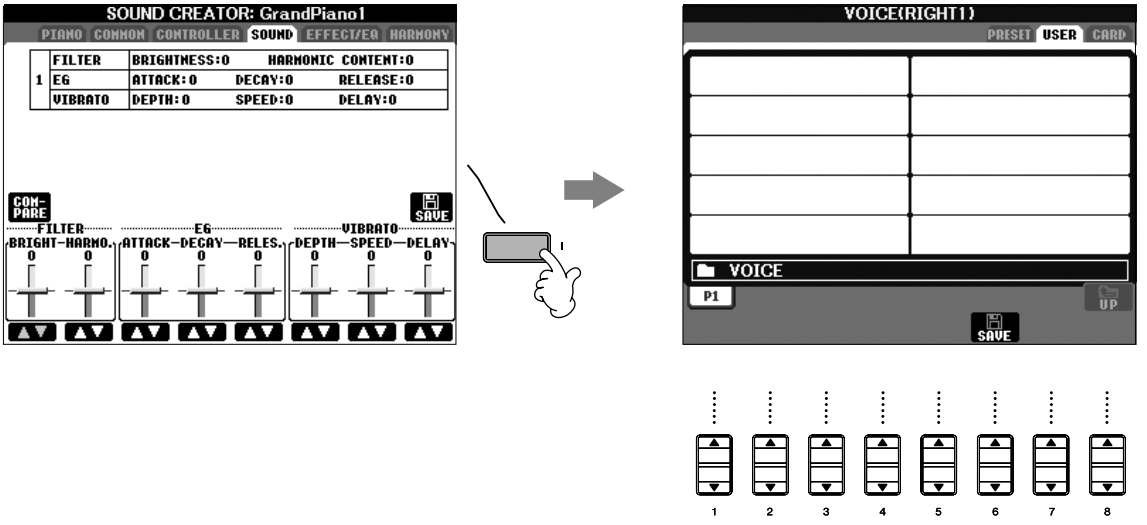

2 **Select the appropriate tab (USER, CARD, etc.) to which you want to save the data by using the TAB [◄]/[►] buttons.**

3 **Press the [6▼] (SAVE) button to call up the le naming display.**



4 **Enter the le name.**

5 **Press the [8▼] (OK) button to save the le.**

If you want to cancel the Save operation, press the [8▼] (CANCEL) button.The saved le will be automatically located at the appropriate position among the les in alphabetical order.

Internal memory (User tab displays) capacity

The internal memory capacity of the instrument is about 1.5MB. This capasity applies to all file types, including Voice, Style, Song, and Registration data files.

RESTORING THE FACTORY-PROGRAMMED SETTING

Restoring the Factory-programmed System

While holding the C7 key (right-most key on the keyboard), turn the [POWER] button ON.
This operation has the same result as and is a shortcut for the System Setup restore operation explained in step 2 of the following section.

> The operation of restoring the factory-programmed settings does not affect the Internet Settings. To reset the Internet Settings, refer to page 67.

Restoring the Factory-programmed Settings Independently by Item

1 Call up the operation display.
[FUNCTION]—[I]UTILITY—TAB[ ]—SYSTEM RESET

2 Select items by pressing the [1▲▼]—[3▲▼] buttons.

SYSTEM SETUP	Restores the System Setup parameters to the original factory settings. Refer to the separate Data List booklet for details about which parameters belong to the System Setup.
MIDI SETUP	Restores the MIDI settings including the MIDI templates on the User tab display to the original factory status.
USER EFFECT	Restores the User Effect settings including the user effect types, user master EQ types, and user vocal harmony types created via the Mixing Console display to the original factory settings.
MUSIC FINDER	Restores the Music Finder data (all records) to the original factory settings.
FILES&FOLDERS	Deletes all les and folders stored in the User tab display.
REGIST	Temporarily deletes the current Registration Memory settings of the selected Bank. The same can be done also by turning the [POWER] button ON while holding the B6 key (right-most B key on the keyboard).

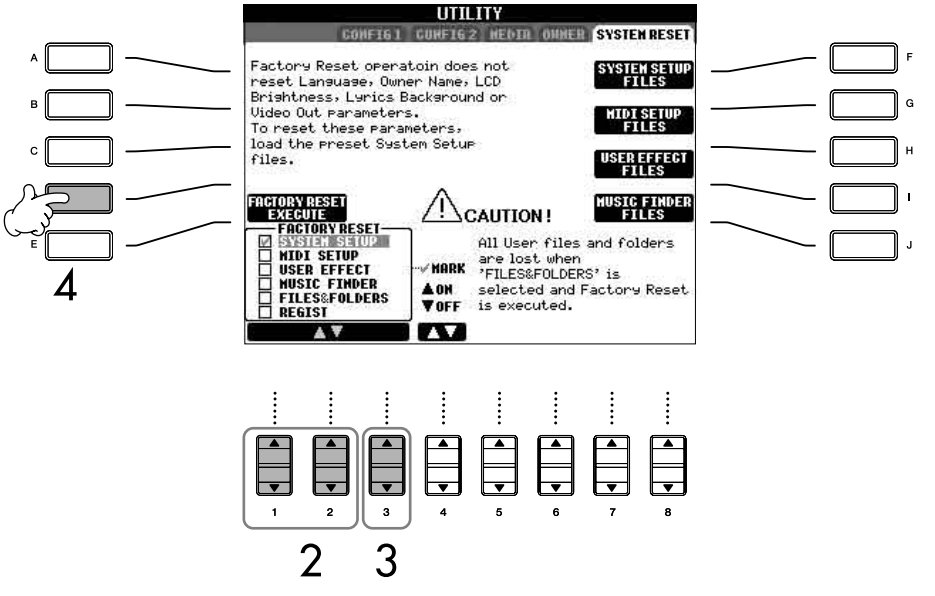

3 **Checkmark the box of the item to be reset to the factory programmed settings by pressing the [4▲▼] button.**

4 **Press the [D] button to execute the Factory Reset operation for all checkmarked items.**

> ⚠ This operation deletes all your original data for the respective item (MIDI SETUP, USER EFFECT, MUSIC FINDER, and FILES & FOLDERS).

Saving and Recalling Your Original Settings as a Single File

For the items below, you can save your Original Settings as a Single File for future recall.

1 **Make all desired settings on the instrument.**

2 **Call up the operation display.**

[FUNCTION]→[I]UTILITY →TAB[▶]SYSTEM RESET

3 **Press one of the [F]—[I] buttons to call up the relevant display for saving your data.**

SYSTEM SETUP	Parameters set on the various displays such as the [FUNCTION] → UTILITY are handled as a single System Setup le. Refer to the separate Data List booklet for details on which parameters belong to the System Setup.
MIDI SETUP	The MIDI settings including the MIDI templates on the User tab display are handled as a single le.
USER EFFECT	The User Effect settings including the user effect types, user master EQ types, and user vocal harmony types created via the Mixing Console displays are managed as a single le.
MUSIC FINDER	All the preset and created records of the Music Finder are handled as a single le.

4 **Select one of the tabs (other than the PRESET) by pressing the TAB[◀][▶] buttons.**

Note that the le in the PRESET tab display is the le of factory-programmed settings. If you select it, the factory-programmed settings for the respective item will be restored. (This is the same results as on page 65 Restoring the Factory-programmed Settings Independently by Item.)

5 **Save your le (page 64).**

6 **To recall your le, select the tab and page to which you ve saved the le (same tab and page as speci ed in step 4), and press the corresponding [A]—[J] button.**

INITIALIZING INTERNET SETTING

The settings of the Internet function are not initialized when using the Initialize operation of the Clavinova; Internet settings must be initialized separately, as explained here. Initializing will reset to the default values not only the settings of the browser, but also all settings you have made in the Internet Settings displays (except for the cookies and bookmarks), including those related to Internet connection.

1 **Press the [5▼] (SETTING) button to call up the Internet Settings display.**

2 **Press the TAB [►] button to select the OTHERS tab.**

3 **Press the [1 ▲▼] (UP/DOWN) button to select "Initialize."**

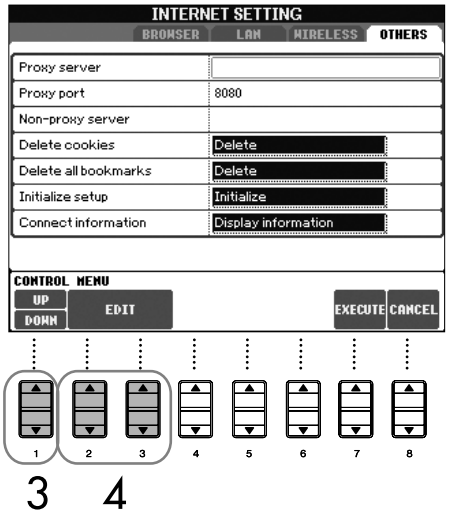

4 **Use the [2 ▲▼] / [3 ▲▼] (EDIT) buttons to initialize the Internet settings.**

Delete cookies/bookmarks
Cookies and bookmarks are still remain after executing the initialize operation above.
To delete the cookies or bookmarks, use the appropriate operations in the OTHERS tab display.

FACTORY SET

- MASTER VOLUME: MIN
- MIC VOLUME: MIN
- MIC/LINE SW: MIC
- A setup of the voltage change machine of destination N: 240V

SYSTEM BOOTING FLOWCHART

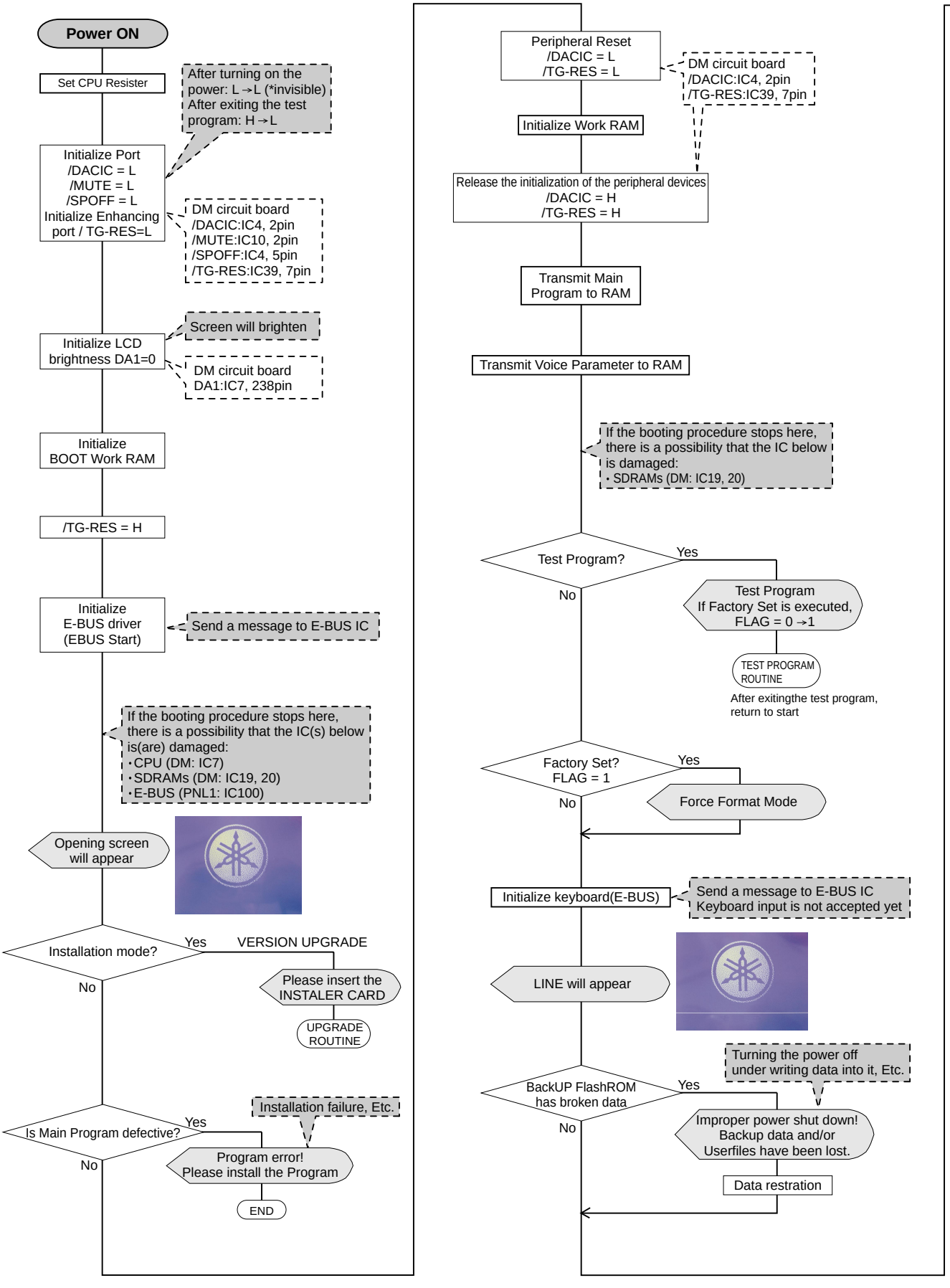

Note: Factory Set FLAG=1: At the time of turning power on again, after the execution of the Factory Reset in the Test Program.

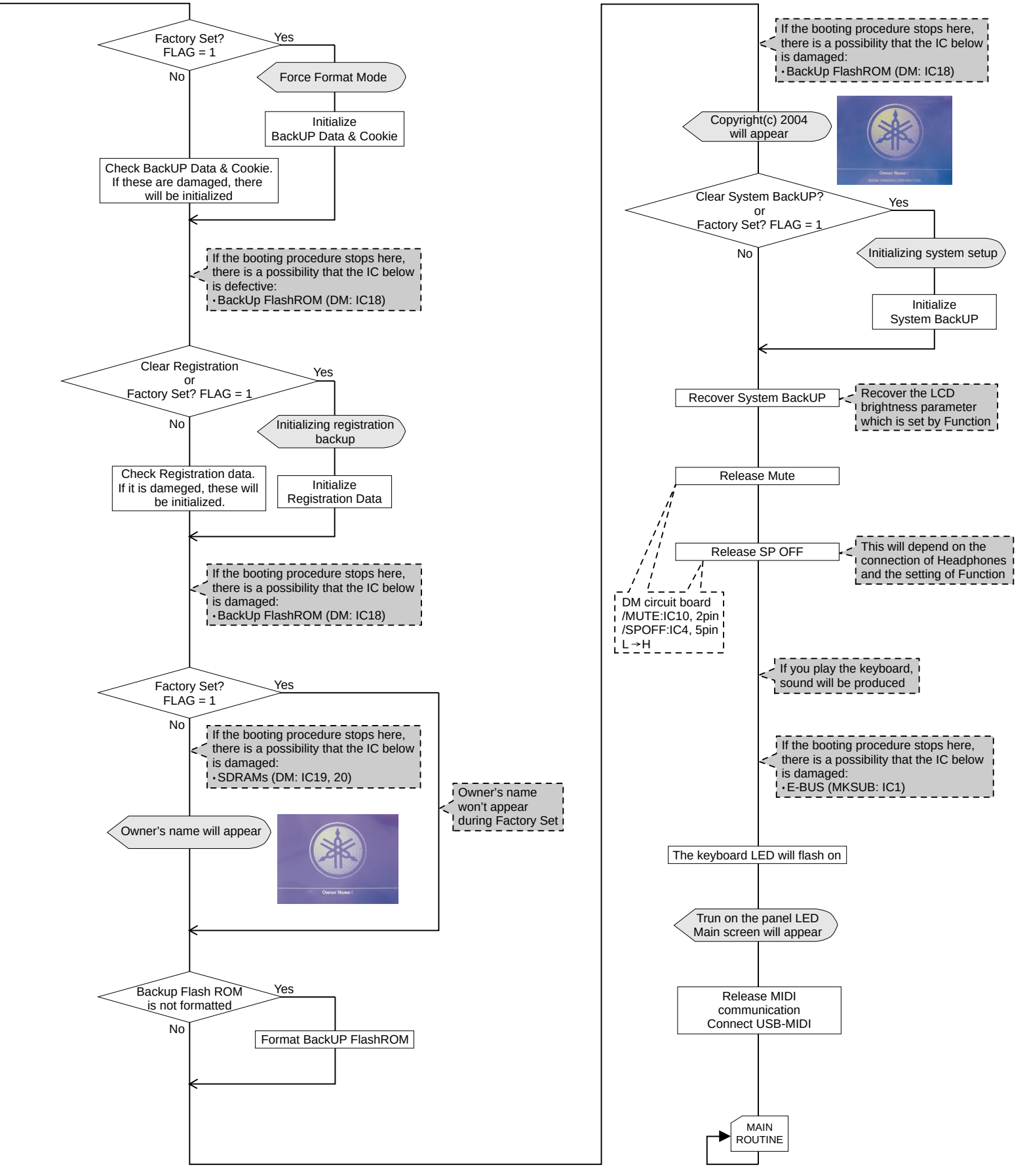
Factory Set?
FLAG = 1
Yes
No
Force Format Mode
Initialize
BackUP Data & Cookie
Check BackUP Data & Cookie.
If these are damaged, there
will be initialized
If the booting procedure stops here, there is a possibility that the IC below is defective:
・BackUp FlashROM (DM: IC18)
Clear Registration
or
Factory Set? FLAG = 1
Yes
No
Initializing registration
backup
Check Registration data.
If it is dameged, these will
be initialized.
Initialize
Registration Data
If the booting procedure stops here, there is a possibility that the IC below is damaged:
・BackUp FlashROM (DM: IC18)
Factory Set?
FLAG = 1
Yes
No
If the booting procedure stops here, there is a possibility that the IC below is damaged:
・SDRAMs (DM: IC19, 20)
Owner's name won't appear
during Factory Set
Owner's name will appear
Backup Flash ROM
is not formatted
Yes
No
Format BackUP FlashROM
If the booting procedure stops here, there is a possibility that the IC below is damaged:
・BackUp FlashROM (DM: IC18)
Copyright(c) 2004
will appear
Clear System BackUP?
or
Factory Set? FLAG = 1
Yes
No
Initializing system setup
Initialize
System BackUP
Recover System BackUP
Recover the LCD brightness parameter which is set by Function
Release Mute
Release SP OFF
This will depend on the connection of Headphones and the setting of Function
DM circuit board
/MUTE:IC10, 2pin
/SPOFF:IC4, 5pin
L→H
If you play the keyboard, sound will be produced
If the booting procedure stops here, there is a possibility that the IC below is damaged:
・E-BUS (MKSUB: IC1)
The keyboard LED will flash on
Trun on the panel LED
Main screen will appear
Release MIDI
communication
Connect USB-MIDI
MAIN
ROUTINE

YAMAHA [Clavinova]
Model CVP-303 MIDI Implementation Chart

Date : 29-Oct-2003
Version : 1.00

Function...		Transmitted	Recognized	Remarks
Basic Channel	Default	1 - 16	1 - 16	
	Changed	1 - 16	1 - 16	
Mode	Default	3	3	
	Messages	X	X	
	Altered	**********	X	
Note Number : True voice		0 - 127 **********	0 - 127 0 - 127	
Velocity	Note ON	○ 9nH,v=1-127	○ 9nH,v=1-127	
	Note OFF	X 9nH,v=0	X	
After Touch	Key's	X	○	
	Ch's	X	○	
Pitch Bend		○	○ 0 - 24 semi	
Control Change	0,32	○	○	Bank Select
	1,5,7,10,11	○	○	
	6,38	○	○	Data Entry
	64,65,66,67	○	○	
	71-74	○	○	Sound Controller
	84	○	○	Portament Cntrl
	91,93,94	○	○	Effect Depth
	96,97	○	○	RPN Inc,Dec
	98,99	○	○	NRPN LSB,MSB
	100,101	○	○	RPN LSB,MSB
Prog Change : True #		○ 0 - 127 **********	○ 0 - 127	
System Exclusive		○	○	
Common	: Song Pos.	X	X	
	: Song Sel.	X	X	
	: Tune	X	X	
System Real Time	: Clock	○	○	
	: Commands	○	○	
Aux Mes-sages	: All Sound Off	X	○ (120,126,127)	
	: Reset All Cntrls	X	○ (121)	
	: Local ON/OFF	X	○ (122)	
	: All Notes OFF	X	○ (123-125)	
	: Active Sense	○	○	
	: Reset	X	X	
Notes:				

Mode 1 : OMNI ON , POLY
Mode 2 : OMNI ON ,MONO
Mode 3 : OMNI OFF, POLY
Mode 4 : OMNI OFF,MONO

○ : Yes
X : No

MIDI DATA FORMAT

Many MIDI messages listed in the MIDI Data Format are expressed in decimal numbers, binary numbers and hexadecimal numbers. Hexadecimal numbers may include the letter “H” as a suffix. Also, “n” can freely be defined as any whole number.
To enter data/values, refer to the table below.

Decimal	Hexadecimal	Binary
0	00	0000 0000
1	01	0000 0001
2	02	0000 0010
3	03	0000 0011
4	04	0000 0100
5	05	0000 0101
6	06	0000 0110
7	07	0000 0111
8	08	0000 1000
9	09	0000 1001
10	0A	0000 1010
11	0B	0000 1011
12	0C	0000 1100
13	0D	0000 1101
14	0E	0000 1110
15	0F	0000 1111
16	10	0001 0000
17	11	0001 0001
18	12	0001 0010
19	13	0001 0011
20	14	0001 0100
21	15	0001 0101
22	16	0001 0110
23	17	0001 0111
24	18	0001 1000
25	19	0001 1001
26	1A	0001 1010
27	1B	0001 1011
28	1C	0001 1100
29	1D	0001 1101
30	1E	0001 1110
31	1F	0001 1111

Decimal	Hexadecimal	Binary
32	20	0010 0000
33	21	0010 0001
34	22	0010 0010
35	23	0010 0011
36	24	0010 0100
37	25	0010 0101
38	26	0010 0110
39	27	0010 0111
40	28	0010 1000
41	29	0010 1001
42	2A	0010 1010
43	2B	0010 1011
44	2C	0010 1100
45	2D	0010 1101
46	2E	0010 1110
47	2F	0010 1111
48	30	0011 0000
49	31	0011 0001
50	32	0011 0010
51	33	0011 0011
52	34	0011 0100
53	35	0011 0101
54	36	0011 0110
55	37	0011 0111
56	38	0011 1000
57	39	0011 1001
58	3A	0011 1010
59	3B	0011 1011
60	3C	0011 1100
61	3D	0011 1101
62	3E	0011 1110
63	3F	0011 1111

Decimal	Hexadecimal	Binary
64	40	0100 0000
65	41	0100 0001
66	42	0100 0010
67	43	0100 0011
68	44	0100 0100
69	45	0100 0101
70	46	0100 0110
71	47	0100 0111
72	48	0100 1000
73	49	0100 1001
74	4A	0100 1010
75	4B	0100 1011
76	4C	0100 1100
77	4D	0100 1101
78	4E	0100 1110
79	4F	0100 1111
80	50	0101 0000
81	51	0101 0001
82	52	0101 0010
83	53	0101 0011
84	54	0101 0100
85	55	0101 0101
86	56	0101 0110
87	57	0101 0111
88	58	0101 1000
89	59	0101 1001
90	5A	0101 1010
91	5B	0101 1011
92	5C	0101 1100
93	5D	0101 1101
94	5E	0101 1110
95	5F	0101 1111

Decimal	Hexadecimal	Binary
96	60	0110 0000
97	61	0110 0001
98	62	0110 0010
99	63	0110 0011
100	64	0110 0100
101	65	0110 0101
102	66	0110 0110
103	67	0110 0111
104	68	0110 1000
105	69	0110 1001
106	6A	0110 1010
107	6B	0110 1011
108	6C	0110 1100
109	6D	0110 1101
110	6E	0110 1110
111	6F	0110 1111
112	70	0111 0000
113	71	0111 0001
114	72	0111 0010
115	73	0111 0011
116	74	0111 0100
117	75	0111 0101
118	76	0111 0110
119	77	0111 0111
120	78	0111 1000
121	79	0111 1001
122	7A	0111 1010
123	7B	0111 1011
124	7C	0111 1100
125	7D	0111 1101
126	7E	0111 1110
127	7F	0111 1111

- Except the table above, for example 144-159 (decimal)/9nH/1001 0000-1001 1111 (binary) denotes the Note On Message for each channel (1-16). 176-191/BnH/1011 0000-1011 1111 denotes the Control Change Message for each channel (1-16). 192-207/CnH/ 1100 0000-1100 1111 denotes the Program Change Message for each channel (1-16). 240/F0H/1111 0000 denotes the start of a System Exclusive Message. 247/F7H/1111 0111 denotes the end of a System Exclusive Message.

- aaH (hexadecimal)/0aaaaaaa (binary) denotes the data address. The address contains High, Mid, and Low.
- bbH/0bbbbbbb denotes the byte count.
- ccH/0ccccccc denotes the check sum.
- ddH/0ddddddd denotes the data/value.

MIDI CHANNEL MESSAGE (1)

								[MIDI]										[Song Creator]		
MIDI Events	Status byte	1st Data byte			2nd Data byte			Voice		MIDI Reception					MIDI Transmission				PLAY		REC
	Status	Data	(HEX)	Parameter	Data	(HEX)	Parameter	Regular/Drum/ Natural/Organ Voice	Mic/Vocal Harmony	Song	Right1/ Right2/ Left	Keyboard	Style	Extra	Right1/ Right2/ Left	Style	Song	Upper Lower	PLAY	REW	From panel (Right1/ Right2/ Left)
Key Off [GM1] [GM2]	8nH (n: Channel Number)	kk		Key no. (0-127)	vv		Velocity (0-127)	O	O (Harmony Channel/ Melody Channel)	O	O	O	O	O	X	O	O	X	O	X	X
Key On [GM1] [GM2]	9nH (n: Channel Number)	kk		Key no. (0-127)	vv		Key On: vv=1-127 Key Off :vv=0	O	O (Harmony Channel/ Melody Channel)	O	O	O	O	O		O	O		O	X	O
Control Change	BnH	0	(00H)	Bank Select MSB [GM2]	0 8 64 118 119 120 121 126 127	00H 08H 40H 76H 77H 78H 79H 7EH 7FH	Normal Mega Voice SFX Voice GS Rhythm GS Normal GM2 Rhythm GM2 Normal SFX Kit Drum Kit	O	X	O	O	O (Right1)	O	O				X	O	O	O
		1	(01H)	Modulation [GM1] [GM2]	0-127	(00H...7FH)	Data	O	X	O	O	O (All Keyboard parts)	O	O		O	O		O	O	O
		5	(05H)	Portamento Time [GM2]	0-127	(00H...7FH)	Data	O (Except Organ Flutes)	X	O	O	O (All Keyboard parts)	X	O		X	O	X	O	O	O
		6	(06H)	Data Entry MSB [GM2]	0-127	(00H...7FH)	Data	O	O (Harmony Channel/ Melody Channel)	O	O	O (All Keyboard parts)	O	O		O	O	X	O	X	O
		7	(07H)	Main Volume [GM1] [GM2]	0-127	(00H...7FH)	Data	O	O (A/D Part Receive Channel)	O	O	O (All Keyboard parts)	O	O				X	O	O	O
		10	(0AH)	Panpot [GM1] [GM2]	0-127	(00H...7FH)	L64...C...R63	O	O (A/D Part Receive Channel)	O	O	O (All Keyboard parts)	O	O				X	O	O	O
		11	(0BH)	Expression [GM1] [GM2]	0-127	(00H...7FH)	Data	O	X	O	O	O (All Keyboard parts)	O	O					O	O	O
		32	(20H)	Bank Select LSB [GM2]	0-127	(00H...7FH)	Data	O	X	O	O	O (Right1)	O	O				X	O	O	O
		38	(26H)	Data Entry LSB [GM2]	0-127	(00H...7FH)	Data	O	X	O	O	O (All Keyboard parts)	X	O		X	O	X	O	X	O
		64	(40H)	Sustain (Damper) [GM1] [GM2]	0-127	(00H...7FH)	Data	O	O (Harmony Channel/ Melody Channel)	O	O	O (All Keyboard parts)	X	O		X	O		O	O	O
		65	(41H)	Portamento [GM2]	0-127	(00H...7FH)	0...63, 64...127 (OFF, ON)	O (Except Natural Piano, Organ Flutes)	X	O	O	O (All Keyboard parts)	X	O		X	O		O	O	O
		66	(42H)	Sostenuto [GM2]	0-127	(00H...7FH)	0...63, 64...127 (OFF, ON)	O	X	O	O	O (All Keyboard parts)	X	O		X	O		O	O	O
		67	(43H)	Soft Pedal [GM2]	0-127	(00H...7FH)	0...63, 64...127 (OFF, ON)	O	X	O	O	O (All Keyboard parts)	X	O		X	O		O	O	O
		71	(47H)	Harmonic Content [GM2]	0-127	(00H...7FH)	-64...0...+63	O	X	O	O	O (All Keyboard parts)	O	O				X	O	O	O
		72	(48H)	Release Time [GM2]	0-127	(00H...7FH)	-64...0...+63	O	X	O	O	O (All Keyboard parts)	O	O		O	O	X	O	O	O
		73	(49H)	Attack Time [GM2]	0-127	(00H...7FH)	-64...0...+63	O	X	O	O	O (All Keyboard parts)	O	O		O	O	X	O	O	O
		74	(4AH)	Brightness [GM2]	0-127	(00H...7FH)	-64...0...+63	O	X	O	O	O (All Keyboard parts)	O	O				X	O	O	O
		75	(4BH)	Decay Time [GM2]	0-127	(00H...7FH)	-64...0...+63	O	X	O	O	O (All Keyboard parts)	O	O	X	X	O	X	O	O	X
		76	(4CH)	Vibrato Rate [GM2]	0-127	(00H...7FH)	-64...0...+63	O	X	O	O	O (All Keyboard parts)	O	O	X	X	O	X	O	O	X
		77	(4DH)	Vibrato Depth [GM2]	0-127	(00H...7FH)	-64...0...+63	O	X	O	O	O (All Keyboard parts)	O	O	X	X	O	X	O	O	X
		78	(4EH)	Vibrato Delay [GM2]	0-127	(00H...7FH)	-64...0...+63	O	X	O	O	O (All Keyboard parts)	O	O	X	X	O	X	O	O	X
		84	(54H)	Portamento Control			Key no. (0-127)	O	X	O	O	X	O	O	O		O	X	O	X	O
		91	(5BH)	Effect1 Depth (Reverb Send Level) [GM2]	0-127	(00H...7FH)	Data	O	O (A/D Part Receive Channel)	O	O	O (All Keyboard parts)	O	O				X	O	O	O
		93	(5DH)	Effect3 Depth (Chorus Send Level) [GM2]	0-127	(00H...7FH)	Data	O	O (A/D Part Receive Channel)	O	O	O (All Keyboard parts)	O	O				X	O	O	O
		94	(5EH)	Effect4 Depth (Variation Send Level)	0-127	(00H...7FH)	Data	O	X	O	O	O (All Keyboard parts)	O	O	O			X	O	O	X Multi Record-ing
		96	(60H)	RPN Increment	-	-	The data byte is ignored.	O	O (Harmony Channel/ Melody Channel)	O	O	X	O	O	X	X	O	X	O	X	X
		97	(61H)	RPN Decrement	-	-	The data byte is ignored.	O	O (Harmony Channel/ Melody Channel)	O	O	X	O	O	X	X	O	X	O	X	X
		98	(62H)	NRPN LSB	0-127	(00H...7FH)	Data	O	O (Harmony Channel/ Melody Channel)	O	O	X	O	O		O	O	X	O	O	O

[MIDI] [Song Creator]

MIDI Events	Status byte	1st Data byte			2nd Data byte			Voice		MIDI Reception					MIDI Transmission				PLAY		REC
	Status	Data	(HEX)	Parameter	Data	(HEX)	Parameter	Regular/Drum/ Natural/Organ Voice	Mic/Vocal Harmony	Song	Right1/ Right2/ Left	Keyboard	Style	Extra	Right1/ Right2/ Left	Style	Song	Upper Lower	PLAY	REW	From panel (Right1/ Right2/ Left)
		99	(63H)	NRPN MSB	0-127	(00H...7FH)	Data	O	O (Harmony Channel/ Melody Channel)	O	O	X	O	O	●	O	O	X	O	O	O
		100	(64H)	RPN LSB [GM2]	0-127	(00H...7FH)	Data	O	O (Harmony Channel/ Melody Channel)	O	O	O (All Keyboard parts)	O	O	●	●	●	X	O	O	O
		101	(65H)	RPN MSB [GM2]	0-127	(00H...7FH)	Data	O	O (Harmony Channel/ Melody Channel)	O	O	O (All Keyboard parts)	O	O	●	●	●	X	O	O	O
Mode Message	BnH (n: Channel Number)	120	(78H)	All Sound Off [GM2]	0	(00H)	Data	O	X	O	O	O (All Keyboard parts)	O	O	X	X	O	X	O	X	X
		121	(79H)	Reset All Controllers [GM1] [GM2]	0	(00H)	Data	O	X	O	X	X	X	X	X	X	O	X	O	X	X
		122	(7AH)	Local Control	0 127	(00H) (7FH)	OFF ON	-	-	O					X	X	X	X	X	X	X
		123	(7BH)	All Note Off [GM1] [GM2]	0	(00H)	Data	O	O (Harmony Channel/ Melody Channel)	O	O	O (All Keyboard parts)	O	O	X	X	O	X	O	X	X
		124	(7CH)	Omni Off [GM2]	0	(00H)	Data	O	X	O	X	X	X	X	X	X	O	X	O	X	X
		125	(7DH)	Omni On [GM2]	0	(00H)	Data	O	X	O	X	X	X	X	X	X	O	X	O	X	X
		126	(7EH)	Mono [GM2]	0-16	(00H...10H)	Data	O	X	O	X	X	X	X	X	X	O	X	O	X	X
		127	(7FH)	Poly [GM2]	0	(00H)	Data	O	X	O	X	X	X	X	X	X	O	X	O	X	X
Program Change [GM1] [GM2]	CnH (n: Channel Number)	pp	(00H... 7FH)	Voice Number (0-127)	-	-	-	O	X	O	O	O (Right1)	O	O	●	●	●	X	O	O	O
Channel After Touch [GM1] [GM2]	DnH (n: Channel Number)	vv	(00H... 7FH)	Data	-	-	-	O	X	O	O	O (All Keyboard parts)	X	O	X	X	O	X	O	X	O
Polyphonic After Touch	AnH (n: Channel Number)	kk	(00H... 7FH)	Key no. (0-127)	vv	(00H...7FH)	Data	O	X	O	X	X	X	X	X	X	O	X	O	X	X
Pitch Bend Change [GM1] [GM2]	EnH (n: Channel Number)	cc	(00H... 7FH)	LSB	dd	(00H...7FH)	MSB	O	O (Harmony Channel/ Melody Channel)	O	O	O (All Keyboard parts)	O	O	●	O	O	●	O	O	O
Realtime Message	F8H MIDI Clock	-		-	-		-	-	-	O (Received when the Clock is set to MIDI A, MIDI B, USB1, or USB2.)					O (Transmitted when the Clock is set to Internal and the Transmit Clock is set to on.)				-	-	-
	FAH Start	-		-	-		-	-	-	O (Received when the Clock is set to MIDI A, MIDI B, USB1, or USB2.)					O (Transmitted when the Transmit Clock is set to on.)				-	-	-
	FBH Continue	-		-	-		-	-	-	X					X				-	-	-
	FCH Stop	-		-	-		-	-	-	O (Received when the Clock is set to MIDI A, MIDI B, USB1, or USB2.)					O (Transmitted when the Transmit Clock is set to on.)				-	-	-
	FEH Active Sense [GM2]	-		-	-		-	-	-	O					O				-	-	-
	FFH System Reset	-		-	-		-	-	-	X					X				-	-	-

●: Transmitted via panel operations and keyboard/controller performances. O: Available

About Mic/Vocal Harmony column:
The relevant parameters are received by the song part designated by the Effect's Harmony Channel Parameter or Melody Channel Parameter.

Mic./Vocal Harmony

CVP-301	X
CVP-303	O
CVP-305	O
CVP-307	O
CVP-309(GP)	O

[GM1] ... GM Required Parameter
[GM2] ... GM Level2 Required Parameter

MIDI CHANNEL MESSAGE (2)

NRPN

[MIDI] [Song Creator]

NRPN		Data Entry		Parameter	Data Range	Voice		MIDI Reception					MIDI Transmission				PLAY		REC
MSB	LSB	MSB	LSB			Regular/Drum/ Natural/Organ Voice	Mic/Vocal Harmony	Song	Right1/ Right2/ Left	Keyboard	Style	Extra	Right1/ Right2/ Left	Style	Song	Upper Lower	PLAY	REW	From panel (Right1/ Right2/ Left)
01H	08H	mmH	--	Vibrato Rate	mm: 00H-40H-7FH (-64...0...+63)	O	O (Harmony Channel/Melody Channel)	O	O	X	O	O	●	O	O	X	O	O	O
01H	09H	mmH	--	Vibrato Depth	mm: 00H-40H-7FH (-64...0...+63)	O	O (Harmony Channel/Melody Channel)	O	O	X	O	O	●	O	O	X	O	O	O
01H	0AH	mmH	--	Vibrato Delay	mm: 00H-40H-7FH (-64...0...+63)	O	O (Harmony Channel/Melody Channel)	O	O	X	O	O	●	O	O	X	O	O	O
01H	20H	mmH	--	Low Pass Filter Cutoff Frequency	mm: 00H-40H-7FH (-64...0...+63)	O	X	O	X	X	O	X	X	X	O	X	O	O	X
01H	21H	mmH	--	Low Pass Filter Resonance	mm: 00H-40H-7FH (-64...0...+63)	O	X	O	X	X	O	X	X	X	O	X	O	O	X
01H	30H	mmH	--	EQ Bass Gain	mm: 00H-40H-7FH (-64...0...+63)	O	X	O	X	X	O	X	X	X	O	X	O	O	X
01H	31H	mmH	--	EQ Treble Gain	mm: 00H-40H-7FH (-64...0...+63)	O	X	O	X	X	O	X	X	X	O	X	O	O	X
01H	34H	mmH	--	EQ Bass Frequency	mm: 04H-28H (32...2.0k[Hz])	O	X	O	X	X	X	X	X	X	O	X	O	O	X
01H	35H	mmH	--	EQ Treble Frequency	mm: 1CH-3AH (500...16.0k[Hz])	O	X	O	X	X	X	X	X	X	O	X	O	O	X
01H	63H	mmH	--	EG Attack Time	mm: 00H-40H-7FH (-64...0...+63)	O	X	O	X	X	O	X	X	X	O	X	O	O	X
01H	64H	mmH	--	EG Decay Time	mm: 00H-40H-7FH (-64...0...+63)	O	X	O	O	X	O	O	●	O	O	X	O	O	O
01H	66H	mmH	--	EG Release	mm: 00H-40H-7FH (-64...0...+63)	O	X	O	X	X	O	X	X	X	O	X	O	O	X
14H	rrH	mmH	--	Drum Low Pass Filter Cutoff Frequency	rr: drum instrument note number mm: 00H-40H-7FH (-64...0...+63)	O (Drum only)	X	O	X	X	X	X	X	O	O	X	O	X	X
15H	rrH	mmH	--	Drum Low Pass Filter Resonance	rr: drum instrument note number mm: 00H-40H-7FH (-64...0...+63)	O (Drum only)	X	O	X	X	X	X	X	O	O	X	O	X	X
16H	rrH	mmH	--	Drum EG Attack Rate	rr: drum instrument note number mm: 00H-40H-7FH (-64...0...+63)	O (Drum only)	X	O	X	X	X	X	X	O	O	X	O	X	X
17H	rrH	mmH	--	Drum EG Decay Rate	rr: drum instrument note number mm: 00H-40H-7FH (-64...0...+63)	O (Drum only)	X	O	X	X	X	X	X	O	O	X	O	X	X
18H	rrH	mmH	--	Drum Pitch Coarse	rr: drum instrument note number mm: 00H-40H-7FH (-64...0...+63)	O (Drum only)	X	O	X	X	X	X	X	O	O	X	O	X	X
19H	rrH	mmH	--	Drum Pitch Fine	rr: drum instrument note number mm: 00H-40H-7FH (-64...0...+63)	O (Drum only)	X	O	X	X	X	X	X	O	O	X	O	X	X
1AH	rrH	mmH	--	Drum Level	rr: drum instrument note number mm: 00H-7FH (0...127)	O (Drum only)	X	O	X	X	X	X	X	O	O	X	O	X	X
1CH	rrH	mmH	--	Drum Pan	rr: drum instrument note number mm: 00H, 01H-40H-7FH (RND, L63...C...R63)	O (Drum only)	X	O	X	X	X	X	X	O	O	X	O	X	X
1DH	rrH	mmH	--	Drum Reverb Send Level	rr: drum instrument note number mm: 00H-7FH (0...127)	O (Drum only)	X	O	X	X	X	X	X	O	O	X	O	X	X
1EH	rrH	mmH	--	Drum Chorus Send Level	rr: drum instrument note number mm: 00H-7FH (0...127)	O (Drum only)	X	O	X	X	X	X	X	O	O	X	O	X	X
1FH	rrH	mmH	--	Drum Variation Send Level	rr: drum instrument note number mm: 00H-7FH (0...127) (Variation Connection = SYSTEM) mm: 00H, 01H-7FH (OFF, ON) (Variation Connection = INSERTION)	O (Drum only)	X	O	X	X	X	X	X	O	O	X	O	X	X
30H	rrH	mmH	--	Drum EQ Bass Gain	rr: drum instrument note number mm: 00H-7FH (0...127)	X	X	X	X	X	X	X	X	X	X	X	X	X	X
31H	rrH	mmH	--	Drum EQ Treble Gain	rr: drum instrument note number mm: 00H-7FH (0...127)	X	X	X	X	X	X	X	X	X	X	X	X	X	X
34H	rrH	mmH	--	Drum EQ Bass Frequency	rr: drum instrument note number mm: 04H-28H (32...2.0k[Hz])	X	X	X	X	X	X	X	X	X	X	X	X	X	X
35H	rrH	mmH	--	Drum EQ Treble Frequency	rr: drum instrument note number mm: 1CH-3AH (500...16.0k[Hz])	X	X	X	X	X	X	X	X	X	X	X	X	X	X

●: Transmitted via panel operations and keyboard/controller performances. O: Available

NRPN MSB: 14H-1FH (for drums) message is accepted as long as the channel is set with a drum voice.
Data Entry LSB: Ignored.

NRPN (Vocal Harmony)

[MIDI] [Song Creator]

NRPN		Data Entry		Parameter	Data Range	Voice		MIDI Reception					MIDI Transmission				PLAY		REC
MSB	LSB	MSB	LSB			Regular/Drum/ Natural/Organ Voice	Mic/Vocal Harmony	Song	Right1/ Right2/ Left	Keyboard	Style	Extra	Right1/ Right2/ Left	Style	Song	Upper Lower	PLAY	REW	From panel (Right1/ Right2/ Left)
00H	00H	mmH	--	Harmony Mute	mm: 00H-3FH, 40H-7FH (Off, On)	X	O (Harmony Channel)	X	X	X	X	X	X	X	O	X	O	X	X
01H	1AH	mmH	--	Detune Modulation	mm: 00H-7FH (0...127)	X	O (Harmony Channel)	X	X	X	X	X	X	X	O	X	O	X	X
02H	10H	mmH	--	Harmony1 Volume	mm: 00H-7FH (0...127)	X	O (Harmony Channel)	X	X	X	X	X	X	X	●	X	O	X	X
02H	11H	mmH	--	Harmony2 Volume	mm: 00H-7FH (0...127)	X	O (Harmony Channel)	X	X	X	X	X	X	X	●	X	O	X	X
02H	12H	mmH	--	Harmony3 Volume	mm: 00H-7FH (0...127)	X	O (Harmony Channel)	X	X	X	X	X	X	X	●	X	O	X	X
02H	20H	mmH	--	Harmony1 Pan	mm: 00H, 01H-40H-7FH (RND, L63...C...R63)	X	O (Harmony Channel)	X	X	X	X	X	X	X	●	X	O	X	X
02H	21H	mmH	--	Harmony2 Pan	mm: 00H, 01H-40H-7FH (RND, L63...C...R63)	X	O (Harmony Channel)	X	X	X	X	X	X	X	●	X	O	X	X
02H	22H	mmH	--	Harmony3 Pan	mm: 00H, 01H-40H-7FH (RND, L63...C...R63)	X	O (Harmony Channel)	X	X	X	X	X	X	X	●	X	O	X	X
02H	30H	mmH	--	Harmony1 Detune	mm: 00H-40H-7FH (-64...0...+63)	X	O (Harmony Channel)	X	X	X	X	X	X	X	●	X	O	X	X
02H	31H	mmH	--	Harmony2 Detune	mm: 00H-40H-7FH (-64...0...+63)	X	O (Harmony Channel)	X	X	X	X	X	X	X	●	X	O	X	X
02H	32H	mmH	--	Harmony3 Detune	mm: 00H-40H-7FH (-64...0...+63)	X	O (Harmony Channel)	X	X	X	X	X	X	X	●	X	O	X	X

●: Transmitted via panel operations and keyboard/controller performances. O: Available

Data Entry LSB: Ignored.

RPN

[MIDI] [Song Creator]

RPN MSB	RPN LSB	Data Entry MSB	Data Entry LSB	Parameter	Data Range	Voice: Regular/Drum/Natural/Organ Voice	Voice: Mic/Vocal Harmony	MIDI Reception: Song	MIDI Reception: Right1/Right2/Left	MIDI Reception: Keyboard	MIDI Reception: Style	MIDI Reception: Extra	MIDI Transmission: Right1/Right2/Left	MIDI Transmission: Style	MIDI Transmission: Song	MIDI Transmission: Upper Lower	PLAY: PLAY	PLAY: REW	REC: From panel (Right1/Right2/Left)
00H	00H	mmH	--	Pitch Bend Sensitivity [GM1] [GM2]	mm: 00H-18H (0...+24[semitones])	O	O (Harmony Channel/Melody Channel)	O	O	O (All Keyboard parts)	O	O	●	O	O	X	O	O	O
00H	01H	mmH	llH	Fine Tune [GM1] [GM2]	mm ll: 00H 00H -100[cent] ... mm ll: 40H 00H 0[cent] ... mm ll: 7FH 7FH 100[cent]	O	X	O	O	O (All Keyboard parts)	O	O	●	O	O	X	O	O	O
00H	02H	mmH	--	Coarse Tune [GM1] [GM2]	mm: 28H-40H-58H (-24...0...+24[semitones])	O	X	O	O	O (All Keyboard parts)	O	O	X	O	O	X	O	O	X
00H	05H	mmH	llH	Modulation Sensitivity [GM2]	mm: Specified in semitone steps ll: Specified in 100/128 cent steps	O	X	O	X	X	X	X	X	X	O	X	O	X	X
7FH	7FH	--	--	Null [GM2]	-	O	O	O	O	O (All Keyboard parts)	O	O	X	O	O	X	O	X	X

●: Transmitted via panel operations and keyboard/controller performances. O: Available

About Mic/Vocal Harmony column:
The relevant parameters are received by the song part designated by the Effect's Harmony Channel Parameter or Melody Channel Parameter.

Mic./Vocal Harmony

CVP-301	X
CVP-303	O
CVP-305	O
CVP-307	O
CVP-309(GP)	O

[GM1] ... GM Required Parameter
[GM2] ... GM Level2 Required Parameter

XG PARAMETER CHANGE TABLE

* Not received when Receive System Exclusive Message Parameters is set to off.
* Not transmitted when Transmit System Exclusive Message Parameters is set to off.

MIDI Parameter Change table (XG SYSTEM)

[MIDI] [Song Creator]

Address (H)			Size (H)	Data (H)	Parameter	Description	XG Default (H)	Voice: Regular/Drum/Natural/Organ Voice	Voice: Mic/Vocal Harmony	MIDI Reception: Song	MIDI Reception: Right1/Right2/Left	MIDI Reception: Keyboard	MIDI Reception: Style	MIDI Reception: Extra	MIDI Transmission: Right1/Right2/Left	MIDI Transmission: Style	MIDI Transmission: Song	MIDI Transmission: Upper Lower	PLAY: PLAY	PLAY: REW	REC: From panel (Right1/Right2/Left)
00	00	00	4	00-0F	MASTER TUNE	-102.4...0...+102.3[cent]	*Panel setting value	O	O	O					●				O	X	X
		01		00-0F		1st bit3-0 -> bit15-12															
		02		00-0F		2nd bit3-0 -> bit11-8															
		03		00-0F		3rd bit3-0 -> bit7-4															
				00-0F		4th bit3-0 -> bit3-0															
		04	1	00-7F	MASTER VOLUME	0...127	7F	O	X	O (Available for extra parts of a song)				O				O	O	X
		05	1	00-7F	MASTER ATTENUATOR	0...127	00	X	X	X					X				X	X	X
		06	1	28-58	TRANSPOSE	-24...0...+24[semitones]	40	O	O	O (Available for extra parts of a song)					O				O	O	X
		7D	1	N	DRUM SETUP RESET	N: Drum setup number	-	O (Drum only)	X	O (Available for extra parts of a song)					O				O	X	X
		7E	1	00	XG SYSTEM ON	00=XG system ON	-	O	X	O (Available for extra parts of a song)					O				O	X	O
		7F	1	00	ALL PARAMETER RESET	00=ON	-	O	X	O (Available for extra parts of a song)					O				O	X	X

TOTAL SIZE 07
●: Transmitted via panel operations O: Available

MIDI Parameter Change table (SYSTEM INFORMATION)

[MIDI] [Song Creator]

Address (H)			Size (H)	Data (H)	Parameter	Description	Voice: Regular/Drum/Natural/Organ Voice	Voice: Mic/Vocal Harmony	MIDI Reception: Song	MIDI Reception: Right1/Right2/Left	MIDI Reception: Keyboard	MIDI Reception: Style	MIDI Reception: Extra	MIDI Transmission: Right1/Right2/Left	MIDI Transmission: Style	MIDI Transmission: Song	MIDI Transmission: Upper Lower	PLAY: PLAY	PLAY: REW	REC: From panel (Right1/Right2/Left)
01	00	00	E	20-7F	Model Name 1	32...127 (ASCII CHARACTER)	-	-		-				O (Available only when receiving requests via MIDI)				-	-	-
		...	1	...	...	...														
		0D		20-7F	Model Name 14	32...127 (ASCII CHARACTER)														
		0E			NOT USED															
		0F			NOT USED															

TOTAL SIZE 10
Transmitted in response to Dump Request. Not received.

MIDI Parameter Change table (EFFECT1)

[MIDI] [Song Creator]

Address (H)			Size (H)	Data (H)	Parameter	Description	XG Default (H)	Voice: Regular/Drum/Natural/Organ Voice	Voice: Mic/Vocal Harmony	MIDI Reception: Song	MIDI Reception: Right1/Right2/Left	MIDI Reception: Keyboard	MIDI Reception: Style	MIDI Reception: Extra	MIDI Transmission: Right1/Right2/Left	MIDI Transmission: Style	MIDI Transmission: Song	MIDI Transmission: Upper Lower	PLAY: PLAY	PLAY: REW	REC: From panel (Right1/Right2/Left)
02	01	00	2	00-7F	REVERB TYPE MSB	Refer to Effect Parameter List	01 (=HALL1)	O	O			O				●			O	O	O
				00-7F	REVERB TYPE LSB	"	00														
		02	1	00-7F	REVERB PARAMETER 1	"	Depends on Reverb Type	O	O			O				●			O	O	O
		03	1	00-7F	REVERB PARAMETER 2	"	Depends on Reverb Type	O	O			O				●			O	O	O
		04	1	00-7F	REVERB PARAMETER 3	Refer to Effect Parameter List	Depends on Reverb Type	O	O			O				●			O	O	O
		05	1	00-7F	REVERB PARAMETER 4	"	Depends on Reverb Type	O	O			O				●			O	O	O
		06	1	00-7F	REVERB PARAMETER 5	"	Depends on Reverb Type	O	O			O				●			O	O	O
		07	1	00-7F	REVERB PARAMETER 6	"	Depends on Reverb Type	O	O			O				●			O	O	O
		08	1	00-7F	REVERB PARAMETER 7	"	Depends on Reverb Type	O	O			O				●			O	O	O

Address (H)			Size (H)	Data (H)	Parameter	Description	XG Default (H)	[MIDI] Voice		[MIDI] MIDI Reception					[MIDI] MIDI Transmission				[Song Creator] PLAY		[Song Creator] REC
								Regular/Drum/ Natural/Organ Voice	Mic/ Vocal Harmony	Song	Right1/ Right2/ Left	Keyboard	Style	Extra	Right1/ Right2/ Left	Style	Song	Upper Lower	PLAY	REW	From panel (Right1/ Right2/Left)
		09	1	00-7F	REVERB PARAMETER 8	〃	Depends on Reverb Type	O	O		O				●				O	O	O
		0A	1	00-7F	REVERB PARAMETER 9	〃	Depends on Reverb Type	O	O		O				●				O	O	O
		0B	1	00-7F	REVERB PARAMETER 10	〃	Depends on Reverb Type	O	O		O				●				O	O	O
		0C	1	00-7F	REVERB RETURN	-λdB...0dB...+6dB (0...64...127)	40	O	O		O				●				O	O	O
		0D	1	01-7F	REVERB PAN	L63...C...R63	40	O	O		O				O				O	O	X

TOTAL SIZE 0E

02	01	10	1	00-7F	REVERB PARAMETER 11	Refer to Effect Parameter List	Depends on Reverb Type	O	O		O				●				O	O	O
		11	1	00-7F	REVERB PARAMETER 12	〃	Depends on Reverb Type	O	O		O				●				O	O	O
		12	1	00-7F	REVERB PARAMETER 13	〃	Depends on Reverb Type	O	O		O				●				O	O	O
		13	1	00-7F	REVERB PARAMETER 14	〃	Depends on Reverb Type	O	O		O				●				O	O	O
		14	1	00-7F	REVERB PARAMETER 15	〃	Depends on Reverb Type	O	O		O				●				O	O	O
		15	1	00-7F	REVERB PARAMETER 16	〃	Depends on Reverb Type	O	O		O				●				O	O	O

TOTAL SIZE 06

●: Transmitted via panel operations O: Available

Address (H)			Size (H)	Data (H)	Parameter	Description	XG Default (H)	[MIDI] Voice		[MIDI] MIDI Reception					[MIDI] MIDI Transmission				[Song Creator] PLAY		[Song Creator] REC
								Regular/Drum/ Natural/Organ Voice	Mic/ Vocal Harmony	Song	Right1/ Right2/ Left	Keyboard	Style	Extra	Right1/ Right2/ Left	Style	Song	Upper Lower	PLAY	REW	From panel (Right1/ Right2/Left)
02	01	20	2	00-7F 00-7F	CHORUS TYPE MSB CHORUS TYPE LSB	Refer to Effect Parameter List	41 (=CHORUS1) 00	O	O		O				●				O	O	O
		22	1	00-7F	CHORUS PARAMETER 1	〃	Depends on Chorus Type	O	O		O				●				O	O	O
		23	1	00-7F	CHORUS PARAMETER 2	〃	Depends on Chorus Type	O	O		O				●				O	O	O
		24	1	00-7F	CHORUS PARAMETER 3	〃	Depends on Chorus Type	O	O		O				●				O	O	O
		25	1	00-7F	CHORUS PARAMETER 4	〃	Depends on Chorus Type	O	O		O				●				O	O	O
		26	1	00-7F	CHORUS PARAMETER 5	〃	Depends on Chorus Type	O	O		O				●				O	O	O
		27	1	00-7F	CHORUS PARAMETER 6	〃	Depends on Chorus Type	O	O		O				●				O	O	O
		28	1	00-7F	CHORUS PARAMETER 7	〃	Depends on Chorus Type	O	O		O				●				O	O	O
		29	1	00-7F	CHORUS PARAMETER 8	〃	Depends on Chorus Type	O	O		O				●				O	O	O
		2A	1	00-7F	CHORUS PARAMETER 9	〃	Depends on Chorus Type	O	O		O				●				O	O	O
		2B	1	00-7F	CHORUS PARAMETER 10	〃	Depends on Chorus Type	O	O		O				●				O	O	O
		2C	1	00-7F	CHORUS RETURN	-λdB...0dB...+6dB (0...64...127)	40	O	O		O				●				O	O	O
		2D	1	01-7F	CHORUS PAN	L63...C...R63	40	O	O		O				O				O	O	X
		2E	1	00-7F	SEND CHORUS TO REVERB	-λdB...0dB...+6dB (0...64...127)	00	O	O		O				O				O	O	X

TOTAL SIZE 0F

02	01	30	1	00-7F	CHORUS PARAMETER 11	Refer to Effect Parameter List	Depends on Chorus Type	O	O		O				●				O	O	O
		31	1	00-7F	CHORUS PARAMETER 12	〃	Depends on Chorus Type	O	O		O				●				O	O	O
		32	1	00-7F	CHORUS PARAMETER 13	〃	Depends on Chorus Type	O	O		O				●				O	O	O
		33	1	00-7F	CHORUS PARAMETER 14	〃	Depends on Chorus Type	O	O		O				●				O	O	O
		34	1	00-7F	CHORUS PARAMETER 15	〃	Depends on Chorus Type	O	O		O				●				O	O	O
		35	1	00-7F	CHORUS PARAMETER 16	〃	Depends on Chorus Type	O	O		O				●				O	O	O

TOTAL SIZE 06

Address (H)			Size (H)	Data (H)	Parameter	Description	XG Default (H)	[MIDI] Voice		[MIDI] MIDI Reception					[MIDI] MIDI Transmission				[Song Creator] PLAY		[Song Creator] REC
								Regular/Drum/ Natural/Organ Voice	Mic/ Vocal Harmony	Song	Right1/ Right2/ Left	Keyboard	Style	Extra	Right1/ Right2/ Left	Style	Song	Upper Lower	PLAY	REW	From panel (Right1/ Right2/Left)
02	01	40	2	00-7F 00-7F	VARIATION TYPE MSB VARIATION TYPE LSB	Refer to Effect Parameter List 〃	05 (=DELAY L, C, R) 00	O	O		O				●				O	O	O
		42	2	00-7F 00-7F	VARIATION PARAMETER 1 MSB VARIATION PARAMETER 1 LSB	〃	Depends on Variation Type	O	O		O				●				O	O	O
		44	2	00-7F 00-7F	VARIATION PARAMETER 2 MSB VARIATION PARAMETER 2 LSB	〃	Depends on Variation Type	O	O		O				●				O	O	O
		46	2	00-7F 00-7F	VARIATION PARAMETER 3 MSB VARIATION PARAMETER 3 LSB	〃	Depends on Variation Type	O	O		O				●				O	O	O
		48	2	00-7F 00-7F	VARIATION PARAMETER 4 MSB VARIATION PARAMETER 4 LSB	〃	Depends on Variation Type	O	O		O				●				O	O	O
		4A	2	00-7F 00-7F	VARIATION PARAMETER 5 MSB VARIATION PARAMETER 5 LSB	〃	Depends on Variation Type	O	O		O				●				O	O	O
		4C	2	00-7F 00-7F	VARIATION PARAMETER 6 MSB VARIATION PARAMETER 6 LSB	Refer to Effect Parameter List	Depends on Variation Type	O	O		O				●				O	O	O
		4E	2	00-7F 00-7F	VARIATION PARAMETER 7 MSB VARIATION PARAMETER 7 LSB	〃	Depends on Variation Type	O	O		O				●				O	O	O
		50	2	00-7F 00-7F	VARIATION PARAMETER 8 MSB VARIATION PARAMETER 8 LSB	〃	Depends on Variation Type	O	O		O				●				O	O	O
		52	2	00-7F 00-7F	VARIATION PARAMETER 9 MSB VARIATION PARAMETER 9 LSB	〃	Depends on Variation Type	O	O		O				●				O	O	O
		54	2	00-7F 00-7F	VARIATION PARAMETER 10 MSB VARIATION PARAMETER 10 LSB	〃	Depends on Variation Type	O	O		O				●				O	O	O
		56	1	00-7F	VARIATION RETURN	-λdB...0dB...+6dB (0...64...127)	40	O	O		O				●				O	O	O
		57	1	01-7F	VARIATION PAN	L63...C...R63	40	O	O		O				O				O	O	X
		58	1	00-7F	SEND VARIATION TO REVERB	-λdB...0dB...+6dB (0...64...127)	00	O	O		O				O				O	O	X

Address (H)			Size (H)	Data (H)	Parameter	Description	XG Default (H)	[MIDI] Voice		[MIDI] MIDI Reception					[MIDI] MIDI Transmission				[Song Creator] PLAY		[Song Creator] REC
								Regular/Drum/ Natural/Organ Voice	Mic/ Vocal Harmony	Song	Right1/ Right2/ Left	Keyboard	Style	Extra	Right1/ Right2/ Left	Style	Song	Upper Lower	PLAY	REW	From panel (Right1/ Right2/Left)
		59	1	00-7F	SEND VARIATION TO CHORUS	-λ dB...0dB...+6dB (0...64...127)	00	O	O		O					O			O	O	X
		5A	1	00-01	VARIATION CONNECTION	INSERTION, SYSTEM	00	O	O		O					●			O	O	O
		5B	1	00-7F	VARIATION PART NUMBER	Reception: Part1...16 (0...15) Transmission: Part1...16 (0...15) AD (64) OFF (127)	7F	O	O		O					●			O	O	O
		5C	1	00-7F	MW VARIATION CONTROL DEPTH	-64...0...+63	40	O	O		O					O			O	O	X
		5D	1	00-7F	BEND VARIATION CONTROL DEPTH	-64...0...+63	40	O	O		O					O			O	O	X
		5E	1	00-7F	CAT VARIATION CONTROL DEPTH	-64...0...+63	40	O	O		O					O			O	O	X
		5F	1	00-7F	AC1 VARIATION CONTROL DEPTH	-64...0...+63	40	O	O		O					O			O	O	X
		60	1	00-7F	AC2 VARIATION CONTROL DEPTH	-64...0...+63	40	O	O		O					O			O	O	X

TOTAL SIZE 21

02	01	70	1	00-7F	VARIATION PARAMETER 11	Refer to Effect Parameter List	Depends on Variation Type	O	O		O					●			O	O	O
		71	1	00-7F	VARIATION PARAMETER 12	〃	Depends on Variation Type	O	O		O					●			O	O	O
		72	1	00-7F	VARIATION PARAMETER 13	〃	Depends on Variation Type	O	O		O					●			O	O	O
		73	1	00-7F	VARIATION PARAMETER 14	〃	Depends on Variation Type	O	O		O					●			O	O	O
		74	1	00-7F	VARIATION PARAMETER 15	〃	Depends on Variation Type	O	O		O					●			O	O	O
		75	1	00-7F	VARIATION PARAMETER 16	〃	Depends on Variation Type	O	O		O					●			O	O	O

TOTAL SIZE 06

●: Transmitted via panel operations. O: Available

MIDI Parameter Change table (MULTI EQ)

Address (H)			Size (H)	Data (H)	Parameter	Description		[MIDI] Voice		[MIDI] MIDI Reception					[MIDI] MIDI Transmission				[Song Creator] PLAY		[Song Creator] REC
								Regular/Drum/ Natural/Organ Voice	Mic/ Vocal Harmony	Song	Right1/ Right2/ Left	Keyboard	Style	Extra	Right1/ Right2/ Left	Style	Song	Upper Lower	PLAY	REW	From panel (Right1/ Right2/Left)
02	40	00	1	00-04	EQ TYPE	flat, jazz, pops, rock, classic	*The MULTI EQ Parameter cannot be reset to its factory setting with XG SYSTEM ON.	O	O		O					O			O	X	X
		01	1	34-4C	EQ GAIN1	-12...0...+12[dB]		O	O		O					●			O	X	X
		02	1	04-28	EQ FREQUENCY1	32...2.0k[Hz]		O	O		O					●			O	X	X
		03	1	01-78	EQ Q1	0.1...12.0		O	O		O					●			O	X	X
		04	1	00-01	EQ SHAPE1	shelving, peaking		O	O		O					O			O	X	X
		05	1	34-4C	EQ GAIN2	-12...0...+12[dB]		O	O		O					●			O	X	X
		06	1	0E-36	EQ FREQUENCY2	100...10.0k[Hz]		O	O		O					●			O	X	X
		07	1	01-78	EQ Q2	0.1...12.0		O	O		O					●			O	X	X
		08	1		NOT USED			-	-		-					-			-	-	-
		09	1	34-4C	EQ GAIN3	-12...0...+12[dB]		O	O		O					●			O	X	X
		0A	1	0E-36	EQ FREQUENCY3	100...10.0k[Hz]		O	O		O					●			O	X	X
		0B	1	01-78	EQ Q3	0.1...12.0		O	O		O					●			O	X	X
		0C	1		NOT USED			-	-		-					-			-	-	-
		0D	1	34-4C	EQ GAIN4	-12...0...+12[dB]		O	O		O					●			O	X	X
		0E	1	0E-36	EQ FREQUENCY4	100...10.0k[Hz]		O	O		O					●			O	X	X
		0F	1	01-78	EQ Q4	0.1...12.0		O	O		O					●			O	X	X
		10	1		NOT USED			-	-		-					-			-	-	-
		11	1	34-4C	EQ GAIN5	-12...0...+12[dB]		O	O		O					●			O	X	X
		12	1	1C-3A	EQ FREQUENCY5	0.5k...16.0k[Hz]		O	O		O					●			O	X	X
		13	1	01-78	EQ Q5	0.1...12.0		O	O		O					●			O	X	X
		14	1	00-01	EQ SHAPE5	shelving, peaking		O	O		O					O			O	X	X

TOTAL SIZE 15

●: Transmitted via panel operations. O: Available

MIDI Parameter Change table (EFFECT2)

Address (H)			Size (H)	Data (H)	Parameter	Description		[MIDI] Voice		[MIDI] MIDI Reception					[MIDI] MIDI Transmission				[Song Creator] PLAY		[Song Creator] REC
								Regular/Drum/ Natural/Organ Voice	Mic/ Vocal Harmony	Song	Right1/ Right2/ Left	Keyboard	Style	Extra	Right1/ Right2/ Left	Style	Song	Upper Lower	PLAY	REW	From panel (Right1/ Right2/Left)
03	n	00	2	00-7F 00-7F	INSERTION EFFECT TYPE MSB INSERTION EFFECT TYPE LSB	Refer to Effect Parameter List	*The EFFECT 2 Parameter cannot be reset to its factory setting with XG SYSTEM ON.	O	O		O					●			O	O	O
		02	1	00-7F	INSERTION EFFECT PARAMETER 1	〃		O	O		O					●			O	O	O
		03	1	00-7F	INSERTION EFFECT PARAMETER 2	〃		O	O		O					●			O	O	O
		04	1	00-7F	INSERTION EFFECT PARAMETER 3	〃		O	O		O					●			O	O	O
		05	1	00-7F	INSERTION EFFECT PARAMETER 4	〃		O	O		O					●			O	O	O
		06	1	00-7F	INSERTION EFFECT PARAMETER 5	〃		O	O		O					●			O	O	O
		07	1	00-7F	INSERTION EFFECT PARAMETER 6	〃		O	O		O					●			O	O	O
		08	1	00-7F	INSERTION EFFECT PARAMETER 7	〃		O	O		O					●			O	O	O
		09	1	00-7F	INSERTION EFFECT PARAMETER 8	〃		O	O		O					●			O	O	O
		0A	1	00-7F	INSERTION EFFECT PARAMETER 9	〃		O	O		O					●			O	O	O
		0B	1	00-7F	INSERTION EFFECT PARAMETER 10	〃		O	O		O					●			O	O	O
		0C	1	00-7F	INSERTION EFFECT PART NUMBER	Reception: Part1...16 (0...15) Transmission: Part1...16 (0...15) AD (64) OFF (127)		O	O		O					●			O	O	O
		0D	1	00-7F	MW INSERTION CONTROL DEPTH	-64...0...+63		O	O		O					O			O	O	X
		0E	1	00-7F	BEND INSERTION CONTROL DEPTH	-64...0...+63		O	O		O					O			O	O	X
		0F	1	00-7F	CAT INSERTION CONTROL DEPTH	-64...0...+63		O	O		O					O			O	O	X
		10	1	00-7F	AC1 INSERTION CONTROL DEPTH	-64...0...+63		O	O		O					O			O	O	X
		11	1	00-7F	AC2 INSERTION CONTROL DEPTH	-64...0...+63		O	O		O					O			O	O	X

TOTAL SIZE 12

Address (H)			Size (H)	Data (H)	Parameter	Description		[MIDI] Voice		[MIDI] MIDI Reception					[MIDI] MIDI Transmission				[Song Creator] PLAY		[Song Creator] REC
								Regular/Drum/ Natural/Organ Voice	Mic/ Vocal Harmony	Song	Right1/ Right2/ Left	Keyboard	Style	Extra	Right1/ Right2/ Left	Style	Song	Upper Lower	PLAY	REW	From panel (Right1/ Right2/Left)
		20	1	00-7F	INSERTION EFFECT PARAMETER 11	Refer to Effect Parameter List		O	O		O				●				O	O	O
		21	1	00-7F	INSERTION EFFECT PARAMETER 12	〃		O	O		O				●				O	O	O
		22	1	00-7F	INSERTION EFFECT PARAMETER 13	〃		O	O		O				●				O	O	O
		23	1	00-7F	INSERTION EFFECT PARAMETER 14	〃		O	O		O				●				O	O	O
		24	1	00-7F	INSERTION EFFECT PARAMETER 15	〃		O	O		O				●				O	O	O
		25	1	00-7F	INSERTION EFFECT PARAMETER 16	〃		O	O		O				●				O	O	O

TOTAL SIZE 6

		30	2	00-7F 00-7F	INSERTION EFFECT PARAMETER 1 MSB INSERTION EFFECT PARAMETER 1 LSB	Refer to Effect Parameter List		O	O		O				●				O	O	O
		32	2	00-7F 00-7F	INSERTION EFFECT PARAMETER 2 MSB INSERTION EFFECT PARAMETER 2 LSB	〃	O		O		O				●				O	O	O
		34	2	00-7F 00-7F	INSERTION EFFECT PARAMETER 3 MSB INSERTION EFFECT PARAMETER 3 LSB	〃	O		O		O				●				O	O	O
		36	2	00-7F	INSERTION EFFECT PARAMETER 4 MSB INSERTION EFFECT PARAMETER 4 LSB	〃	O		O		O				●				O	O	O
		38	2	00-7F 00-7F	INSERTION EFFECT PARAMETER 5 MSB INSERTION EFFECT PARAMETER 5 LSB	〃	O		O		O				●				O	O	O
		3A	2	00-7F 00-7F	INSERTION EFFECT PARAMETER 6 MSB INSERTION EFFECT PARAMETER 6 LSB	〃	O		O		O				●				O	O	O
		3C	2	00-7F 00-7F	INSERTION EFFECT PARAMETER 7 MSB INSERTION EFFECT PARAMETER 7 LSB	〃	O		O		O				●				O	O	O
		3E	2	00-7F 00-7F	INSERTION EFFECT PARAMETER 8 MSB INSERTION EFFECT PARAMETER 8 LSB	〃	O		O		O				●				O	O	O
		40	2	00-7F 00-7F	INSERTION EFFECT PARAMETER 9 MSB INSERTION EFFECT PARAMETER 9 LSB	〃	O		O		O				●				O	O	O
		42	2	00-7F 00-7F	INSERTION EFFECT PARAMETER 10 MSB INSERTION EFFECT PARAMETER 10 LSB	〃	O		O		O				●				O	O	O

TOTAL SIZE 14

●: Transmitted via panel operations O: Available

The second byte of the address is considered as an Insertion effect number
n: insertion effect number

CVP-301	n = 0~2
CVP-303	n = 0~2
CVP-305	n = 0~2
CVP-307	n = 0~4
CVP-309(GP)	n = 0~4

For effect types that do not require MSB, the Parameters for Address 02-0B will be received and the Parameters for Address 30-42 will not be received.
For effect types that require MSB, the Parameters for Address 30-42 will be received and the Parameters for Address 02-0B will not be received.
When Bulk Dumps that include Effect Type data are transmitted, the Parameters for Address 02-0B will always be transmitted. But, effects that require MSB, when the bulk dump is received the Parameters for Address 02-0B will not be received.

MIDI Parameter Change table (SPECIAL EFFECT)

CVP-301	X
CVP-303	O
CVP-305	O
CVP-307	O
CVP-309(GP)	O

Address (H)			Size (H)	Data (H)	Parameter	Description		[MIDI] Voice		[MIDI] MIDI Reception					[MIDI] MIDI Transmission				[Song Creator] PLAY		[Song Creator] REC
								Regular/Drum/ Natural/Organ Voice	Mic/ Vocal Harmony	Song	Right1/ Right2/ Left	Keyboard	Style	Extra	Right1/ Right2/ Left	Style	Song	Upper Lower	PLAY	REW	From panel (Right1/ Right2/Left)
04	00	00	2	00-7F 00-7F	INSERTION EFFECT TYPE MSB INSERTION EFFECT TYPE LSB	Vocoder (89), Chordal (90), Detune (91), Chromatic (92), Thru (0...88, 93...127)	*The SPECIAL EFFECT Parameter cannot be reset to its factory setting with XG SYSTEM ON	X	O		O				●				O	O	X
		02	1	00-7F	INSERTION EFFECT PARAMETER 1 Harmony Mode			X	O		O				●				O	O	X
		03	1	00-7F	INSERTION EFFECT PARAMETER 2 Harmony Gender Type	Off (0), Auto (1)		X	O		O				●				O	O	X
		04	1	00-7F	INSERTION EFFECT PARAMETER 3 Lead Gender Type	Off (0), Unison (1), Male (2), Female (3)		X	O		O				●				O	O	X
		05	1	00-7F	INSERTION EFFECT PARAMETER 4 Lead Gender Depth	-64...0...+63 (0...127)		X	O		O				●				O	O	X
		06	1	00-7F	INSERTION EFFECT PARAMETER 5 Lead Pitch Correction	Free (0), Correct (1)		X	O		O				●				O	O	X
		07	1	00-7F	INSERTION EFFECT PARAMETER 6 Auto Upper Gender Threshold	0...12 (0...12)		X	O		O				●				O	O	X
		08	1	00-7F	INSERTION EFFECT PARAMETER 7 Auto Lower Gender Threshold	0...12 (0...12)		X	O		O				●				O	O	X
		09	1	00-7F	INSERTION EFFECT PARAMETER 8 Upper Gender Depth	-64...0...+63 (0...127)		X	O		O				●				O	O	X
		0A	1	00-7F	INSERTION EFFECT PARAMETER 9 Lower Gender Depth	-64...0...+63 (0...127)		X	O		O				●				O	O	X
		0B	1	00-7F	INSERTION EFFECT PARAMETER 10	L63>H...L=H...L<H63 (1...64...127)		X	O		O				●				O	O	X
		0C	1	00-7F	INSERTION EFFECT PART NUMBER	AD(64), OFF (0...63, 65...127)		X	O		O				●				O	O	O

Address (H)			Size (H)	Data (H)	Parameter	Description		Voice		MIDI Reception					MIDI Transmission				PLAY		REC
								Regular/Drum/ Natural/Organ Voice	Mic/ Vocal Harmony	Song	Right1/ Right2/ Left	Keyboard	Style	Extra	Right1/ Right2/ Left	Style	Song	Upper Lower	PLAY	REW	From panel (Right1/ Right2/Left)
		0D	1	00-7F	MW INSERTION CONTROL DEPTH	-64...0...+63		X	X	X					X				X	X	X
		0E	1	00-7F	BEND INSERTION CONTROL DEPTH	-64...0...+63		X	X	X					X				X	X	X
		0F	1	00-7F	CAT INSERTION CONTROL DEPTH	-64...0...+63		X	X	X					X				X	X	X
		10	1	00-7F	AC1 INSERTION CONTROL DEPTH	-64...0...+63		X	X	X					X				X	X	X
		11	1	00-7F	AC2 INSERTION CONTROL DEPTH	-64...0...+63		X	X	X					X				X	X	X

TOTAL SIZE 12

		14	1	00-7F	UNIQUE INSERTION EFFECT EXTERNAL CONTROL CH1 (HARMONY CHANNEL)	1...16 (0...15), OFF (127)		X	O	O					●				O	O	X
		15	1	00-7F	UNIQUE INSERTION EFFECT EXTERNAL CONTROL CH1 (MELODY CHANNEL)	1...16 (0...15), OFF (127)		X	O	O					O				O	O	X

TOTAL SIZE 2

		20	1	00-7F	INSERTION EFFECT PARAMETER 11 Vibrato Depth	0...100cent (0...127)		X	O	O					●				O	O	X
		21	1	00-7F	INSERTION EFFECT PARAMETER 12 Vibrato Rate	0Hz (0), 0.1...12.7Hz (1...127)		X	O	O					●				O	O	X
		22	1	00-7F	INSERTION EFFECT PARAMETER 13 Vibrato Delay	0...2.54sec (0...127)		X	O	O					●				O	O	X
		23	1	00-7F	INSERTION EFFECT PARAMETER 14			X	X	X					X				X	X	X
		24	1	00-7F	INSERTION EFFECT PARAMETER 15			X	X	X					X				X	X	X
		25	1	00-7F	INSERTION EFFECT PARAMETER 16			X	X	X					X				X	X	X

TOTAL SIZE 6

●: Transmitted via panel operations O: Available

MIDI Parameter Change table (MULTI PART)

[MIDI] [Song Creator]

Address (H)			Size (H)	Data (H)	Parameter	Description	XG Default (H)	Voice		MIDI Reception					MIDI Transmission				PLAY		REC
								Regular/Drum/ Natural/Organ Voice	Mic/ Vocal Harmony	Song	Right1/ Right2/ Left	Keyboard	Style	Extra	Right1/ Right2/ Left	Style	Song	Upper Lower	PLAY	REW	From panel (Right1/ Right2/Left)
08	nn	00	1	00-20	ELEMENT RESERVE	0...32	part10, 26=0, other parts=2	-	-	-	-	-	-	-	-	-	-	-	-	-	-
		01	1	00-7F	BANK SELECT MSB	0...127	part10=7F, other parts =00	O	X	O	O	X	O	O	X	X	O	X	O	O	X
		02	1	00-7F	BANK SELECT LSB	0...127	00	O	X	O	O	X	O	O	X	X	O	X	O	O	X
		03	1	00-7F	PROGRAM NUMBER	1...128	00	O	X	O	O	X	O	O	X	X	O	X	O	O	X
		04	1	00-0F, 7F	Rcv CHANNEL	1...16, OFF	Part No.	O	X	O	X	X	X	X	X	X	O	X	O	X	X
		05	1	00-01	MONO/POLY MODE	MONO, POLY	01	O	X	O	X	X	X	X	X	X	O	X	O	X	X
		06	1	00-02	SAME NOTE NUMBER KEY ON ASSIGN	SINGLE, MULTI, INST (for Drum)	01	O	X	O	X	X	O	X	X	X	O	X	O	X	X
		07	1	00-03	PART MODE	NORMAL, DRUM, DRUMS1...2	part10=02, other parts =00	O	X	O	X	X	X	X	●	●	●	X	O	X	O
		08	1	28-58	NOTE SHIFT	-24...0...+24[semitones]	40	O	X	O	O	X	O	O	X	X	O	X	O	O	X
		09 0A	2	00-0F 00-0F	DETUNE	-12.8...0...+12.7[Hz] 1st bit3-0 -> bit7-4 2nd bit3-0 -> bit3-0	08 00	O	X	O	O	X	O	O	X	X	O	X	O	X	X
		0B	1	00-7F	VOLUME	0...127	64	O	X	O	O	X	O	O	X	X	O	X	O	O	X
		0C	1	00-7F	VELOCITY SENSE DEPTH	0...127	40	O	X	O	O	X	X	O	●	X	O	X	O	O	O
		0D	1	00-7F	VELOCITY SENSE OFFSET	0...127	40	O	X	O	O	X	X	O	●	X	O	X	O	O	O
		0E	1	00-7F	PAN	RND, L63...C...R63	40	O	X	O	O	X	O	O	X	X	O	X	O	O	X
		0F	1	00-7F	NOTE LIMIT LOW	C-2...G8	00	O	X	O	X	X	X	X	X	X	O	X	O	X	X
		10	1	00-7F	NOTE LIMIT HIGH	C-2...G8	7F	O	X	O	X	X	X	X	X	X	O	X	O	X	X
		11	1	00-7F	DRY LEVEL	0...127	7F	O	X	O	O	X	O	O	X	●	●	X	O	O	O
		12	1	00-7F	CHORUS SEND	0...127	00	O	X	O	O	X	O	O	X	X	O	X	O	O	X
		13	1	00-7F	REVERB SEND	0...127	28	O	X	O	O	X	O	O	X	X	O	X	O	O	X
		14	1	00-7F	VARIATION SEND	0...127	00	O	X	O	O	X	O	O	X	X	O	X	O	O	O
		15	1	00-7F	VIBRATO RATE	-64...0...+63	40	O	X	O	O	X	O	O	X	X	O	X	O	O	X
		16	1	00-7F	VIBRATO DEPTH	-64...0...+63	40	O	X	O	O	X	O	O	X	X	O	X	O	O	X
		17	1	00-7F	VIBRATO DELAY	-64...0...+63	40	O	X	O	O	X	O	O	X	X	O	X	O	O	X
		18	1	00-7F	FILTER CUTOFF FREQUENCY	-64...0...+63	40	O	X	O	O	X	O	O	X	X	O	X	O	O	X
		19	1	00-7F	FILTER RESONANCE	-64...0...+63	40	O	X	O	O	X	O	O	X	X	O	X	O	O	X
		1A	1	00-7F	EG ATTACK TIME	-64...0...+63	40	O	X	O	O	X	O	O	X	X	O	X	O	O	X
		1B	1	00-7F	EG DECAY TIME	-64...0...+63	40	O	X	O	O	X	O	O	X	X	O	X	O	O	X
		1C	1	00-7F	EG RELEASE TIME	-64...0...+63	40	O	X	O	O	X	O	O	X	X	O	X	O	O	X
		1D	1	28-58	MW PITCH CONTROL	-24...0...+24[semitones]	40	O	X	O	O	X	X	O	X	X	O	X	O	X	X
		1E	1	00-7F	MW LOW PASS FILTER CONTROL	-9600...0...+9450[cent]	40	O	X	O	O	X	X	O	●	X	O	X	O	O	O
		1F	1	00-7F	MW AMPLITUDE CONTROL	-100...0...+100[%]	40	O	X	O	O	X	X	O	X	X	O	X	O	X	X
		20	1	00-7F	MW LFO PMOD DEPTH	0...127	0A	O	X	O	O	X	X	O	●	X	O	X	O	O	O
		21	1	00-7F	MW LFO FMOD DEPTH	0...127	00	O	X	O	O	X	X	O	●	X	O	X	O	O	O
		22	1	00-7F	MW LFO AMOD DEPTH	0...127	00	O	X	O	O	X	X	O	●	X	O	X	O	O	O
		23	1	28-58	BEND PITCH CONTROL	-24...0...+24[semitones]	42	O	X	O	O	X	O	O	X	X	O	X	O	X	X
		24	1	00-7F	BEND LOW PASS FILTER CONTROL	-9600...0...+9450[cent]	40	O	X	O	O	X	O	O	X	X	O	X	O	X	X
		25	1	00-7F	BEND AMPLITUDE CONTROL	-100...0...+100[%]	40	O	X	O	O	X	O	O	X	X	O	X	O	X	X
		26	1	00-7F	BEND LFO PMOD DEPTH	0...127	00	O	X	O	O	X	O	O	X	X	O	X	O	X	X
		27	1	00-7F	BEND LFO FMOD DEPTH	0...127	00	O	X	O	O	X	O	O	X	X	O	X	O	X	X
		28	1	00-7F	BEND LFO AMOD DEPTH	0...127	00	O	X	O	O	X	O	O	X	X	O	X	O	X	X

TOTAL SIZE 29

[MIDI] [Song Creator]

Address (H)			Size (H)	Data (H)	Parameter	Description	XG Default (H)	Voice		MIDI Reception					MIDI Transmission				PLAY		REC
								Regular/Drum/ Natural/Organ Voice	Mic/ Vocal Harmony	Song	Right1/ Right2/ Left	Keyboard	Style	Extra	Right1/ Right2/ Left	Style	Song	Upper Lower	PLAY	REW	From panel (Right1/ Right2/Left)
		30	1	00-01	Rcv PITCH BEND	OFF, ON	01	O	X	O	X	X	X	X	X	X	O	X	O	X	X
		31	1	00-01	Rcv CH AFTER TOUCH(CAT)	OFF, ON	01	O	X	O	X	X	X	X	X	X	O	X	O	X	X
		32	1	00-01	Rcv PROGRAM CHANGE	OFF, ON	01	O	X	O	X	X	X	X	X	X	O	X	O	X	X
		33	1	00-01	Rcv CONTROL CHANGE	OFF, ON	01	O	X	O	X	X	X	X	X	X	O	X	O	X	X
		34	1	00-01	Rcv POLY AFTER TOUCH(PAT)	OFF, ON	01	O	X	O	X	X	X	X	X	X	O	X	O	X	X
		35	1	00-01	Rcv NOTE MESSAGE	OFF, ON	01	O	X	O	X	X	X	X	X	X	O	X	O	X	X
		36	1	00-01	Rcv RPN	OFF, ON	01	O	X	O	X	X	X	X	X	X	O	X	O	X	X
		37	1	00-01	Rcv NRPN	OFF, ON	XGmode=01, GMmode=00	O	X	O	X	X	X	X	X	X	O	X	O	X	X
		38	1	00-01	Rcv MODULATION	OFF, ON	01	O	X	O	X	X	X	X	X	X	O	X	O	X	X
		39	1	00-01	Rcv VOLUME	OFF, ON	01	O	X	O	X	X	X	X	X	X	O	X	O	X	X
		3A	1	00-01	Rcv PAN	OFF, ON	01	O	X	O	X	X	X	X	X	X	O	X	O	X	X

Address (H)			Size (H)	Data (H)	Parameter	Description	XG Default (H)	[MIDI] Voice		[MIDI] MIDI Reception					[MIDI] MIDI Transmission				[Song Creator] PLAY		[Song Creator] REC
								Regular/Drum/ Natural/Organ Voice	Mic/ Vocal Harmony	Song	Right1/ Right2/ Left	Keyboard	Style	Extra	Right1/ Right2/ Left	Style	Song	Upper Lower	PLAY	REW	From panel (Right1/ Right2/Left)
		3B	1	00-01	Rcv EXPRESSION	OFF, ON	01	O	X	O	X	X	X	X	X	X	O	X	O	X	X
		3C	1	00-01	Rcv HOLD1	OFF, ON	01	O	X	O	X	X	X	X	X	X	O	X	O	X	X
		3D	1	00-01	Rcv PORTAMENTO	OFF, ON	01	O	X	O	X	X	X	X	X	X	O	X	O	X	X
		3E	1	00-01	Rcv SOSTENUTO	OFF, ON	01	O	X	O	X	X	X	X	X	X	O	X	O	X	X
		3F	1	00-01	Rcv SOFT PEDAL	OFF, ON	01	O	X	O	X	X	X	X	X	X	O	X	O	X	X
		40	1	00-01	Rcv BANK SELECT	OFF, ON	01	O	X	O	X	X	X	X	X	X	O	X	O	X	X
		41	1	00-7F	SCALE TUNING C	-64...0...+63[cent]	40	O	X	O	O	X	O	O	●	●	O	X	O	O	O
		42	1	00-7F	SCALE TUNING C#	-64...0...+63[cent]	40	O	X	O	O	X	O	O	●	●	O	X	O	O	O
		43	1	00-7F	SCALE TUNING D	-64...0...+63[cent]	40	O	X	O	O	X	O	O	●	●	O	X	O	O	O
		44	1	00-7F	SCALE TUNING D#	-64...0...+63[cent]	40	O	X	O	O	X	O	O	●	●	O	X	O	O	O
		45	1	00-7F	SCALE TUNING E	-64...0...+63[cent]	40	O	X	O	O	X	O	O	●	●	O	X	O	O	O
		46	1	00-7F	SCALE TUNING F	-64...0...+63[cent]	40	O	X	O	O	X	O	O	●	●	O	X	O	O	O
		47	1	00-7F	SCALE TUNING F#	-64...0...+63[cent]	40	O	X	O	O	X	O	O	●	●	O	X	O	O	O
		48	1	00-7F	SCALE TUNING G	-64...0...+63[cent]	40	O	X	O	O	X	O	O	●	●	O	X	O	O	O
		49	1	00-7F	SCALE TUNING G#	-64...0...+63[cent]	40	O	X	O	O	X	O	O	●	●	O	X	O	O	O
		4A	1	00-7F	SCALE TUNING A	-64...0...+63[cent]	40	O	X	O	O	X	O	O	●	●	O	X	O	O	O
		4B	1	00-7F	SCALE TUNING A#	-64...0...+63[cent]	40	O	X	O	O	X	O	O	●	●	O	X	O	O	O
		4C	1	00-7F	SCALE TUNING B	-64...0...+63[cent]	40	O	X	O	O	X	O	O	●	●	O	X	O	O	O
		4D	1	28-58	CAT PITCH CONTROL	-24...0...+24[semitones]	40	O	X	O	O	X	X	O	X	X	O	X	O	X	X
		4E	1	00-7F	CAT LOW PASS FILTER CONTROL	-9600...0...+9450[cent]	40	O	X	O	O	X	X	O	X	X	O	X	O	O	O
		4F	1	00-7F	CAT AMPLITUDE CONTROL	-100...0...+100[%]	40	O	X	O	O	X	X	O	X	X	O	X	O	X	X
		50	1	00-7F	CAT LFO PMOD DEPTH	0...127	00	O	X	O	O	X	X	O	X	X	O	X	O	O	O
		51	1	00-7F	CAT LFO FMOD DEPTH	0...127	00	O	X	O	O	X	X	O	X	X	O	X	O	O	O
		52	1	00-7F	CAT LFO AMOD DEPTH	0...127	00	O	X	O	O	X	X	O	X	X	O	X	O	O	O
		53	1	28-58	PAT PITCH CONTROL	-24...0...+24[semitones]	40	O	X	O	X	X	X	X	X	X	O	X	O	X	X
		54	1	00-7F	PAT LOW PASS FILTER CONTROL	-9600...0...+9450[cent]	40	O	X	O	X	X	X	X	X	X	O	X	O	X	X
		55	1	00-7F	PAT AMPLITUDE CONTROL	-100...0...+100[%]	40	O	X	O	X	X	X	X	X	X	O	X	O	X	X
		56	1	00-7F	PAT LFO PMOD DEPTH	0...127	00	O	X	O	X	X	X	X	X	X	O	X	O	X	X
		57	1	00-7F	PAT LFO FMOD DEPTH	0...127	00	O	X	O	X	X	X	X	X	X	O	X	O	X	X
		58	1	00-7F	PAT LFO AMOD DEPTH	0...127	00	O	X	O	X	X	X	X	X	X	O	X	O	X	X
		59	1	00-5F	AC1 CONTROLLER NUMBER	0...95	10	O	X	O	X	X	X	X	X	X	O	X	O	X	X
		5A	1	28-58	AC1 PITCH CONTROL	-24...0...+24[semitones]	40	O	X	O	X	X	X	X	X	X	O	X	O	X	X
		5B	1	00-7F	AC1 LOW PASS FILTER CONTROL	-9600...0...+9450[cent]	40	O	X	O	X	X	X	X	X	X	O	X	O	X	X
		5C	1	00-7F	AC1 AMPLITUDE CONTROL	-100...0...+100[%]	40	O	X	O	X	X	X	X	X	X	O	X	O	X	X
		5D	1	00-7F	AC1 LFO PMOD DEPTH	0...127	00	O	X	O	X	X	X	X	X	X	O	X	O	X	X
		5E	1	00-7F	AC1 LFO FMOD DEPTH	0...127	00	O	X	O	X	X	X	X	X	X	O	X	O	X	X
		5F	1	00-7F	AC1 LFO AMOD DEPTH	0...127	00	O	X	O	X	X	X	X	X	X	O	X	O	X	X
		60	1	00-5F	AC2 CONTROLLER NUMBER	0...95	11	O	X	O	X	X	X	X	X	X	O	X	O	X	X
		61	1	28-58	AC2 PITCH CONTROL	-24...0...+24[semitones]	40	O	X	O	X	X	X	X	X	X	O	X	O	X	X
		62	1	00-7F	AC2 LOW PASS FILTER CONTROL	-9600...0...+9450[cent]	40	O	X	O	X	X	X	X	X	X	O	X	O	X	X
		63	1	00-7F	AC2 AMPLITUDE CONTROL	-100...0...+100[%]	40	O	X	O	X	X	X	X	X	X	O	X	O	X	X
		64	1	00-7F	AC2 LFO PMOD DEPTH	0...127	00	O	X	O	X	X	X	X	X	X	O	X	O	X	X
		65	1	00-7F	AC2 LFO FMOD DEPTH	0...127	00	O	X	O	X	X	X	X	X	X	O	X	O	X	X
		66	1	00-7F	AC2 LFO AMOD DEPTH	0...127	00	O	X	O	X	X	X	X	X	X	O	X	O	X	X
		67	1	00-01	PORTAMENTO SWITCH	OFF, ON	00	O (Except Natural Piano, Organ Flutes)	X	O	O	X	X	O	X	X	O	X	O	O	X
		68	1	00-7F	PORTAMENTO TIME	0...127	00	O	X	O	O	X	X	O	X	X	O	X	O	O	X
		69	1	00-7F	PITCH EG INITIAL LEVEL	-64...0...+63	40	O	X	O	O	X	X	O	X	X	O	X	O	X	X
		6A	1	00-7F	PITCH EG ATTACK TIME	-64...0...+63	40	O	X	O	O	X	X	O	X	X	O	X	O	X	X
		6B	1	00-7F	PITCH EG RELEASE LEVEL	-64...0...+63	40	O	X	O	O	X	X	O	X	X	O	X	O	X	X
		6C	1	00-7F	PITCH EG RELEASE TIME	-64...0...+63	40	O	X	O	O	X	X	O	X	X	O	X	O	X	X
		6D	1	01-7F	VELOCITY LIMIT LOW	1...127	01	O	X	O	O	X	X	O	X	X	O	X	O	X	X
		6E	1	01-7F	VELOCITY LIMIT HIGH	1...127	7F	O	X	O	O	X	X	O	X	X	O	X	O	X	X

TOTAL SIZE 3F

		70	1		NOT USED		-	-	-	-	-	-	-	-	-	-	-	-	-	-	-
		71	1		NOT USED		-	-	-	-	-	-	-	-	-	-	-	-	-	-	-
		72	1	00-7F	EQ BASS GAIN	-12dB...+12dB	40	O	X	O	O	X	O	O	●	●	●	X	O	O	O
		73	1	00-7F	EQ TREBLE GAIN	-12dB...+12dB	40	O	X	O	O	X	O	O	●	●	●	X	O	O	O

TOTAL SIZE 04

		74	1		NOT USED		-	-	-	-	-	-	-	-	-	-	-	-	-	-	-
		75	1		NOT USED		-	-	-	-	-	-	-	-	-	-	-	-	-	-	-
		76	1	04-28	EQ BASS FREQUENCY	32...2.0k[Hz]	0C	O	X	O	O	X	X	O	●	X	O	X	O	O	O
		77	1	1C-3A	EQ TREBLE FREQUENCY	500...16.0k[Hz]	36	O	X	O	O	X	X	O	●	X	O	X	O	O	O
		78	1		NOT USED		-	-	-	-	-	-	-	-	-	-	-	-	-	-	-
		79	1		NOT USED		-	-	-	-	-	-	-	-	-	-	-	-	-	-	-
		7A	1		NOT USED		-	-	-	-	-	-	-	-	-	-	-	-	-	-	-
		7B	1		NOT USED		-	-	-	-	-	-	-	-	-	-	-	-	-	-	-
		7C	1		NOT USED		-	-	-	-	-	-	-	-	-	-	-	-	-	-	-
		7D	1		NOT USED		-	-	-	-	-	-	-	-	-	-	-	-	-	-	-
		7E	1		NOT USED		-	-	-	-	-	-	-	-	-	-	-	-	-	-	-
		7F	1		NOT USED		-	-	-	-	-	-	-	-	-	-	-	-	-	-	-

TOTAL SIZE 0C

●: Transmitted via panel operations O: Available

[MIDI] [Song Creator]

Address (H)			Size (H)	Data (H)	Parameter	Description	XG Default (H)	Voice		MIDI Reception					MIDI Transmission				PLAY	REC
								Regular/Drum/ Natural/Organ Voice	Mic/ Vocal Harmony	Song	Right1/ Right2/ Left	Keyboard	Style	Extra	Right1/ Right2/ Left	Style	Song	Upper Lower	PLAY	From panel (Right1/ Right2/Left)
0A	nn	40	1	00-7F	MW OFFSET LEVEL CONTROL	-100 – 100[%]	40	O	-	O	O	X	X	O	O	X	O	X	O	O	O
		41	1	00-7F	BEND OFFSET LEVEL CONTROL	-100 – 100[%]	40	O	-	O	X	X	X	X	X	X	O	X	O	O	X
		42	1	00-7F	CAT OFFSET LEVEL CONTROL	-100 – 100[%]	40	O	-	O	O	X	X	O	X	X	O	X	O	O	O
		43	1	00-7F	PAT OFFSET LEVEL CONTROL	-100 – 100[%]	40	O	-	O	X	X	X	X	X	X	O	X	O	O	X
		44	1	00-7F	AC1 OFFSET LEVEL CONTROL	-100 – 100[%]	40	O	-	O	X	X	X	X	X	X	O	X	O	O	X
		45	1	00-7F	AC2 OFFSET LEVEL CONTROL	-100 – 100[%]	40	O	-	O	X	X	X	X	X	X	O	X	O	O	X

TOTAL SIZE 06

●: Transmitted via panel operations O: Available

nn = PART NUMBER

If there is a Drum Voice assigned to the part, the following parameters are ineffective.
- BANK SELECT LSB
- PORTAMENTO
- MONO/POLY
- SCALE TUNING
- POLY AFTER TOUCH
- PITCH EG

MIDI Parameter Change table (A/D PART)

CVP-301	X
CVP-303	O
CVP-305	O
CVP-307	O
CVP-309(GP)	O

[MIDI] [Song Creator]

Address (H)			Size (H)	Data (H)	Parameter	Description		Voice		MIDI Reception					MIDI Transmission				PLAY	REC
								Regular/Drum/ Natural/Organ Voice	Mic/ Vocal Harmony	Song	Right1/ Right2/ Left	Keyboard	Style	Extra	Right1/ Right2/ Left	Style	Song	Upper Lower	PLAY	From panel (Right1/ Right2/Left)
10	0n	00	1	00-01	INPUT GAIN	MIC, LINE	*The A/D PART parameter cannot be reset to its factory setting with XG System On.	X	X	X					X				X	X	X
		01	1	00-7F	BANK SELECT MSB	0...127		X	X	X					X				X	X	X
		02	1	00-7F	BANK SELECT LSB	0...127		X	X	X					X				X	X	X
		03	1	00-7F	PROGRAM NUMBER	1...128		X	X	X					X				X	X	X
		04	1	00-0F, 7F	Rcv CHANNEL	1...16, OFF		X	O	O					O				O	X	X
		05	1		NOT USED			-	-	-					-				-	-	-
		06	1		NOT USED			-	-	-					-				-	-	-
		07	1		NOT USED			-	-	-					-				-	-	-
		08	1		NOT USED			-	-	-					-				-	-	-
		09	1		NOT USED			-	-	-					-				-	-	-
		0A	1		NOT USED			-	-	-					-				-	-	-
		0B	1	00-7F	VOLUME	0...127		X	O	O					●				O	X	X
		0C	1		NOT USED			-	-	-					-				-	-	-
		0D	1		NOT USED			-	-	-					-				-	-	-
		0E	1	01-7F	PAN	L63...C...R63		X	O	O					●				O	X	X
		0F	1		NOT USED			-	-	-					-				-	-	-
		10	1		NOT USED			-	-	-					-				-	-	-
		11	1	00-7F	DRY LEVEL	0...127		X	O	O					●				O	X	X
		12	1	00-7F	CHORUS SEND	0...127		X	O	O					●				O	X	X
		13	1	00-7F	REVERB SEND	0...127		X	O	O					●				O	X	X
		14	1	00-7F	VARIATION SEND	0...127		X	O	O					●				O	X	X

TOTAL SIZE 15

n: A/D Part Number (0)

MIDI Parameter Change table (DRUM SETUP)

[MIDI] [Song Creator]

Address (H)			Size (H)	Data (H)	Parameter	Description	XG Default (H)	Voice		MIDI Reception					MIDI Transmission				PLAY	REC
								Regular/Drum/ Natural/Organ Voice	Mic/ Vocal Harmony	Song	Right1/ Right2/ Left	Keyboard	Style	Extra	Right1/ Right2/ Left	Style	Song	Upper Lower	PLAY	From panel (Right1/ Right2/Left)
3n	rr	00	1	00-7F	PITCH COARSE	-64...0...+63	40	O (Drum only)	X	O (Available only for song parts)					O				O	X	X
		01	1	00-7F	PITCH FINE	-64...0...+63[cent]	40	O (Drum only)	X	O (Available only for song parts)					O				O	X	X
		02	1	00-7F	LEVEL	0...127	Depends on the note	O (Drum only)	X	O (Available only for song parts)					O				O	X	X
		03	1	00-7F	ALTERNATE GROUP	OFF, 1...127	Depends on the note	O (Drum only)	X	O (Available only for song parts)					O				O	X	X
		04	1	00-7F	PAN	RND, L63...C...R63	Depends on the note	O (Drum only)	X	O (Available only for song parts)					O				O	X	X
		05	1	00-7F	REVERB SEND	0...127	Depends on the note	O (Drum only)	X	O (Available only for song parts)					O				O	X	X
		06	1	00-7F	CHORUS SEND	0...127	Depends on the note	O (Drum only)	X	O (Available only for song parts)					O				O	X	X
		07	1	00-7F	VARIATION SEND	0...127	7F	O (Drum only)	X	O (Available only for song parts)					O				O	X	X
		08	1	00-01	KEY ASSIGN	SINGLE, MULTI	00	O (Drum only)	X	O (Available only for song parts)					O				O	X	X
		09	1	00-01	Rcv NOTE OFF	OFF, ON	Depends on the note	O (Drum only)	X	O (Available only for song parts)					O				O	X	X
		0A	1	00-01	Rcv NOTE ON	OFF, ON	01	O (Drum only)	X	O (Available only for song parts)					O				O	X	X
		0B	1	00-7F	LOW PASS FILTER CUTOFF FREQUENCY	-64...0...+63	40	O (Drum only)	X	O (Available only for song parts)					O				O	X	X
		0C	1	00-7F	LOW PASS FILTER RESONANCE	-64...0...+63	40	O (Drum only)	X	O (Available only for song parts)					O				O	X	X
		0D	1	00-7F	EG ATTACK RATE	-64...0...+63	40	O (Drum only)	X	O (Available only for song parts)					O				O	X	X
		0E	1	00-7F	EG DECAY1 RATE	-64...0...+63	40	O (Drum only)	X	O (Available only for song parts)					O				O	X	X
		0F	1	00-7F	EG DECAY2 RATE	-64...0...+63	40	O (Drum only)	X	O (Available only for song parts)					O				O	X	X

TOTAL SIZE 10

[MIDI] [Song Creator

Address (H)			Size (H)	Data (H)	Parameter	Description	XG Default (H)	Voice		MIDI Reception					MIDI Transmission				PLAY		REC
								Regular/Drum/ Natural/Organ Voice	Mic/ Vocal Harmony	Song	Right1/ Right2/ Left	Keyboard	Style	Extra	Right1/ Right2/ Left	Style	Song	Upper Lower	PLAY	REW	From panel (Right1/ Right2/Left)
		20	1	00-7F	EQ BASS GAIN	-12...+12[dB]	40	X	X	X					X				X	X	X
		21	1	00-7F	EQ TREBLE GAIN	-12...+12[dB]	40	X	X	X					X				X	X	X
		22	1		NOT USED		-	-	-	-					-				-	-	-
		23	1		NOT USED		-	-	-	-					-				-	-	-
		24	1	04-28	EQ BASS FREQUENCY	32...2.0k[Hz]	0C	X	X	X					X				X	X	X
		25	1	1C-3A	EQ TREBLE FREQUENCY	500...16.0k[Hz]	36	X	X	X					X				X	X	X
		26	1		NOT USED		-	-	-	-					-				-	-	-
		27	1		NOT USED		-	-	-	-					-				-	-	-
		28	1		NOT USED		-	-	-	-					-				-	-	-
		29	1		NOT USED		-	-	-	-					-				-	-	-
		2A	1		NOT USED		-	-	-	-					-				-	-	-
		2B	1		NOT USED		-	-	-	-					-				-	-	-
		2C	1		NOT USED		-	-	-	-					-				-	-	-
		2D	1		NOT USED		-	-	-	-					-				-	-	-

TOTAL SIZE 0E

n: Drum Setup Number (0-1)
rr: note number(0D-5B)

In the following cases, the instrument will initialize all Drum Setups.
- XG SYSTEM ON received
- GM SYSTEM ON received
- GM LEVEL2 SYSTEM ON received
- DRUM SETUP RESET received (only when in XG mode)

[Note]
When a part to which a Drum Setup is assigned receives a program change, the assigned Drum Setup will be initialized.
If the same Drum Setup is assigned to two or more parts, changes in Drum Setup parameters (including program changes) will apply to all parts to which it is assigned.

System Exclusive Messages (1)

[GM1] ... GM Required Parameter
[GM2] ... GM Level2 Required Parameter

* Not received when Receive System Exclusive Message Parameters is set to off.
* Not transmitted when Transmit System Exclusive Message Parameters is set to off.

System Exclusive Messages (Universal RealTime Messages)

MIDI Event	Data Format	[MIDI] Voice		[MIDI] MIDI Reception					[MIDI] MIDI Transmission				[Song Creator] PLAY		[Song Creator] REC
		Regular/Drum/ Natural/Organ Voice	Mic/ Vocal Harmony	Song	Right1/ Right2/ Left	Keyboard	Style	Extra	Right1/ Right2/ Left	Style	Song	Upper Lower	PLAY	REW	From panel operations
Master Volume [GM2]	F0 7F XN 04 01 SS TT F7 11110000 F0 = Exclusive status 01111111 7F = Universal Real Time 0xxxnnnn XN = When N is received N = 0-F, whichever is received. X = ignored 00000100 04 = Sub-ID #1 = Device Control Message 00000001 01 = Sub-ID #2 = Master Volume 0ssssssss SS = Volume LSB 0ttttttt TT = Volume MSB 11110111 F7 = End of Exclusive	O	X	O (Available for extra parts of a song)					O				O	O	X
Master Fine Tuning [GM2]	F0 7F XN 04 03 SS TT F7 11110000 F0 = Exclusive status 01111111 7F = Universal Real Time 0xxxnnnn XN = When N is received N = 0-F, whichever is received. X = ignored 00000100 04 = Sub-ID #1 = Device Control Message 00000011 03 = Sub-ID #2 = Master Fine Tuning 0ssssssss SS = Fine Tuning LSB 0ttttttt TT = Fine Tuning MSB 11110111 F7 = End of Exclusive	O	X	O (Available for extra parts of a song)					O				O	X	X
Master Coarse Tuning [GM2]	F0 7F XN 04 04 00 TT F7 11110000 F0 = Exclusive status 01111111 7F = Universal Real Time 0xxxnnnn XN = When N is received N = 0-F, whichever is received. X = ignored 00000100 04 = Sub-ID #1 = Device Control Message 00000100 04 = Sub-ID #2 = Master Coarse Tuning 00000000 00 0ttttttt TT = Coarse Tuning MSB 11110111 F7 = End of Exclusive	O	X	O (Available for extra parts of a song)					O				O	X	X
Reverb Parameter [GM2]	F0 7F XN 04 05 01 01 01 01 PP VV ... F7 11000000 F0 = Exclusive status 01111111 7F = Universal Real Time 0xxxnnnn XN = When N is received N = 0-F, whichever is received. X = ignored 00000100 04 = Sub-ID #1 = Device Control Message 00000101 05 = Sub-ID #2 = Global Parameter Control 00000001 01 = Slot path length = 1 00000001 01 = Parameter ID width = 1 00000001 01 = Value width = 1 00000001 01 = Slot path MSB = 1 00000001 01 = Slot path LSB = 1 (Reverb) 0ppppppp PP = Parameter to be controlled. 0vvvvvvv VV = Value for the Parameter. : : 11110111 F7 = End of Exclusive Parameter (pp) / Value (vv) / Display pp=0 Reverb Type: 0...8 — 0: RoomS, 1: RoomM, 2: RoomL, 3: HallM, 4: HallL (default), 8: GM Plate pp=1 Reverb Time: 0...127 — 0...11.0s	O	O	O					O				O	O	X
Chorus Parameter [GM2]	F0 7F XN 04 05 01 01 01 02 PP VV ... F7 11110000 F0 = Exclusive status 01111111 7F = Universal Real Time 0xxxnnnn XN = When N is received N = 0-F, whichever is received. X = ignored 00000100 04 = Sub-ID #1 = Device Control Message 00000101 05 = Sub-ID #2 = Global Parameter Control 00000001 01 = Slot path length = 1 00000001 01 = Parameter ID width = 1 00000001 01 = Value width = 1 00000001 01 = Slot path MSB = 1 00000010 02 = Slot path LSB = 2 (Chorus) 0ppppppp PP = Parameter to be controlled. 0vvvvvvv VV = Value for the Parameter : : 11110111 F7 = End of Exclusive Parameter (pp) / Value (vv) / Display pp=0 Chorus Type: 0...5 — 0: GM Chorus1, 1: GM Chorus2, 2: GM Chorus3 (default), 3: GM Chorus4, 4: FB Chorus, 5: GM Flanger pp=1 Mod Rate: 0...127 — 0...15.5Hz pp=2 Mod Depth: 0...127 pp=3 Feedback: 0...127 pp=4 Send to Reverb: 0...127	O	O	O					O				O	O	X
Channel Pressure (Aftertouch) [GM2]	F0 7F XN 09 01 0M PP RR ... F7 11110000 F0 = Exclusive status 01111111 7F = Universal Real Time 0xxxnnnn XN = When N is received N = 0-F, whichever is received. X = ignored 00001001 09 = Sub-ID #1 = Controller Destination Setting 00000001 01 = Sub-ID #2 = Controller Type: 01 (Channel Pressure) 0000mmmm 0M = MIDI Channel (00-0F) 0ppppppp PP = Controlled Parameter 0rrrrrrr RR = Data : : 11110111 F7 = End of Exclusive Make sure to set both the controlled parameter and the range. Parameters not set will be restored to their default values. Control Parameter (pp) / Data (RR) / Description / Default Value pp=00 Pitch Control: 28H~58H — -24...0...+24semitones — 40H pp=01 Filter Cutoff Control: 00H~FH — -9600...0...+9450cents — 40H pp=02 Amplitude Control: 00H~FH — -100...0...+100% — 40H pp=03 LFO Pitch Depth: 00H~FH — 0...127 — 00H pp=04 LFO Filter Depth: 00H~FH — 0...127 — 00H pp=05 LFO Amplitude Depth: 00H~FH — 0...127 — 00H	O	X	O	X	X	X	X	X	X	O	X	O	X	X

MIDI Event	Data Format	Voice		MIDI Reception					MIDI Transmission				PLAY		REC
		Regular/Drum/ Natural/Organ Voice	Mic/ Vocal Harmony	Song	Right1/ Right2/ Left	Keyboard	Style	Extra	Right1/ Right2/ Left	Style	Song	Upper Lower	PLAY	REW	From panel operations
Controller (Control Change) [GM2]	F0 7F XN 09 03 0M CC PP RR ... F7 11110000 F0 = Exclusive status 01111111 7F = Universal Real Time 0xxxnnnn XN = When N is received N = 0-F, whichever is received. X = ignored 00001001 09 = Sub-ID #1 = Controller Destination Setting 00000011 03 = Sub-ID #2 = Controller Type:03 (Control Change) 0000mmmm 0M = MIDI Channel (00-0F) 0ccccccc CC = Controller Number (01H-1FH, 40H-5FH) 0ppppppp PP = Controlled Parameter 0rrrrrrr RR = Range . . 11110111 F7 = End of Exclusive Make sure to set both the controlled parameter and the range. Parameters not set will be restored to their default values. Control Parameter (pp) / Data (RR) / Description / Default value pp=00 Pitch Control: 28H~58H, -24...0...+24semitones, 40H pp=01 Filter Cutoff Control: 00H~7FH, -9600...0...+9450cents, 40H pp=02 Amplitude Control: 00H~7FH, -100...0...+100%, 40H pp=03 LFO Pitch Depth: 00H~7FH, 0...127, 00H pp=04 LFO Filter Depth: 00H~7FH, 0...127, 00H pp=05 LFO Amplitude Depth: 00H~7FH, 0...127, 00H	O	X	O	X	X	X	X	X	X	O	X	O	X	X
Key-Based Instrument Control [GM2]	F0 7F XN 0A 01 0M KK CC VV ... F7 11110000 F0 = Exclusive status 01111111 7F = Universal Real Time 0xxxnnnn XN = When N is received N=0-F, whichever is received. X = ignored 00001010 0A = Sub-ID #1=Key-Based Instrument Control 00000001 01 = Sub-ID #2=Controller 0000mmmm 0M = MIDI Channel (00-0F) 0kkkkkkk KK = Key Number 0ccccccc CC = Controller Number 0vvvvvvv VV = Value ... ... 11110111 F7 = End of Exclusive Make sure to set both the controlled number and the value. Control Number (CC) / Value (VV) / Description / Default value CC=07H Volume: 00H~7FH, -100...0...+100%, 40H CC=0AH Pan: 00H~7FH (absolute), L63...C...R63, (Preset value) CC=5BH Reverb Send Level: 00H~7FH (absolute), 0...Max, (Preset value) CC=5DH Chorus Send Level: 00H~7FH (absolute), 0...Max, (Preset value)	O (Drum Only)	X	O	X	X	X	X	X	X	O	X	O	X	X

System Exclusive Messages (Universal Non-RealTime Messages)

[MIDI] [Song Creator]

MIDI Event	Data Format	Voice		MIDI Reception					MIDI Transmission				PLAY		REC
		Regular/Drum/ Natural/Organ Voice	Mic/ Vocal Harmony	Song	Right1/ Right2/ Left	Keyboard	Style	Extra	Right1/ Right2/ Left	Style	Song	Upper Lower	PLAY	REW	From panel operations
GM1 System On [GM1] [GM2]	F0 7E XN 09 01 F7 11110000 F0 = Exclusive status 01111110 7E = Universal Non-Real Time 0xxxnnnn XN = When N is received N = 0-F, whichever is received. X = ignored 00001001 09 = Sub-ID #1 = General MIDI Message 00000001 01 = Sub-ID #2 = General MIDI On 11110111 F7 = End of Exclusive	O	-			O				O			O	X	O
GM2 System On [GM2]	F0 7E XN 09 03 F7 11110000 F0 = Exclusive status 01111110 7E = Universal Non-Real Time 0xxxnnnn XN = When N is received N = 0-F, whichever is received. X = ignored 00001001 09 = Sub-ID #1=General MIDI Message 00000011 03 = Sub-ID #2=General MIDI2 On 11110111 F7 = End of Exclusive	O	-			O				O			O	X	X
General MIDI System Off [GM1] [GM2]	F0 7E XN 09 02 F7 11110000 F0 = Exclusive status 01111110 7E = Universal Non-Real Time 0xxxnnnn XN = When N is received N = 0-F, whichever is received. X = ignored 00001001 09 = Sub-ID #1 = General MIDI Message 00000010 02 = Sub-ID #2 = General MIDI Off 11110111 F7 = End of Exclusive	O	-			O				O			O	X	X
Scale/Octave Tuning [GM2]	F0 7E XN 08 08 JJ GG MM SS ... F7 11110000 F0 = Exclusive status 01111110 7E = Universal Non-Real Time 0xxxnnnn XN = When N is received N=0-F, whichever is received. X = ignored 00001000 08 = Sub-ID #1=MIDI Tuning Standard 00001000 08 = Sub-ID #2=scale/octave tuning 1byte form 0jjjjjjj JJ = Channel/option byte1 bits 0 to 1 = channel 15 to 16 bits 2 to 6 = reserved 0ggggggg GG = Channel byte2 - bits0 to 6 = channel 8 to 14 0mmmmmmm MM = Channel byte2 - bits0 to 6 = channel 1 to 7 0sssssss SS = 12byte tuning offset of 12 semitones from C to B 00H means -64cent 40H means 0cent 7FH means +63cent . . 11110111 F7 = End of Exclusive	O	X			O (Available for song parts)				O			O	X	X

System Exclusive Messages (2)

* Not received when Receive System Exclusive Message Parameters is set to off.
* Not transmitted when Transmit System Exclusive Message Parameters is set to off.

System Exclusive Messages (Style)

[MIDI]

MIDI Event	Data Format	Voice		MIDI Reception					MIDI Transmission			
		Regular/Drum/ Natural/Organ Voice	Mic/Vocal Harmony	Song	Right1/ Right2/ Left	Keyboard	Style	Extra	Right1/ Right2/ Left	Style	Song	Upper Lower
Section Control	F0 43 7E 00 ss dd F7 11110000 F0 = Exclusive status 01000011 43 = YAMAHA ID 01111110 7E = Style 00000000 00 = 0sssssss ss = Switch No. 00H INTRO A 01H INTRO B 02H INTRO C 03H INTRO D 08H MAIN A 09H MAIN B 0AH MAIN C 0BH MAIN D 10H FILL IN AA 11H FILL IN BB 12H FILL IN CC 13H FILL IN DD 18H BREAK FILL 20H ENDING A 21H ENDING B 22H ENDING C 23H ENDING D 0ddddddd dd = Switch On/Off 00H (Off) 7FH (On) 11110111 F7 = End of Exclusive	-	-			O				●		
Tempo Control	F0 43 7E 01 t4 t3 t2 t1 F7 11110000 F0 = Exclusive status 01000011 43 = YAMAHA ID 01111110 7E = Style 00000001 01 = 0ttttttt t4 = tempo4 0ttttttt t3 = tempo3 0ttttttt t2 = tempo2 0ttttttt t1 = tempo1 11110111	-	-			O				●		
Chord Control	F0 43 7E tt d1 d2 d3 d4 F7 Type1 (tt=02) 11110000 F0 = Exclusive status 01000011 43 = YAMAHA ID 01111110 7E = Style 00000010 02 = type 1 0dddddddd1 = chord root (cr) 0dddddddd2 = chord type (ct) 0dddddddd3 = bass note (bn) 0dddddddd4 = bass type (bt) 11110111 F7 = End of Exclusive cr: Chord Root 0fffnnnn fff: b or #, nnnn: note (root) 0000nnnn 0n bbb — 0fff0000 x0 reserved 0001nnnn 1n bb — 0fff0001 x1 C 0010nnnn 2n b — 0fff0010 x2 D 0011nnnn 3n — natural 0fff0011 x3 E 0100nnnn 4n # — 0fff0100 x4 F 0101nnnn 5n ## — 0fff0101 x5 G 0110nnnn 6n ### — 0fff0110 x6 A 0fff0111 x7 B ct : Chord Type 0 - 34, 127 00000000 00 0 Maj — 00010010 12 18 dim7 00000001 01 1 Maj6 — 00010011 13 19 7th 00000010 02 2 Maj7 — 00010100 14 20 7sus4 00000011 03 3 Maj7(#11) — 00010101 15 21 7b5 00000100 04 4 Maj(9) — 00010110 16 22 7(9) 00000101 05 5 Maj7(9) — 00010111 17 23 7(#11) 00000110 06 6 Maj6(9) — 00011000 18 24 7(13) 00000111 07 7 aug — 00011001 19 25 7(b9) 00001000 08 8 min — 00011010 1A 26 7 b13) 00001001 09 9 min6 — 00011011 1B 27 7(#9) 00001010 0A 10 min7 — 00011100 1C 28 Maj7aug 00001011 0B 11 min7b5 — 00011101 1D 29 7aug 00001100 0C 12 min(9) — 00011110 1E 30 1+8 00001101 0D 13 min7(9) — 00011111 1F 31 1+5 00001110 0E 14 min7(11) — 00100000 20 32 sus4 00001111 0F 15 minMaj7 — 00100001 21 33 1+2+5 00010000 10 16 minMaj7(9) — 00100010 22 34 cc 00010001 11 17 dim bn: On Bass Note — Same as Chord root 127: No bass chord bt: Bass Chord — Same as Chord type 127: No bass chord * Not received when Chord System Exclusive Message Parameters is set to off. * Not received when Transmit Chord System Exclusive Message Parameters is set to off.	-	-			O				●		
	Type2 (tt=03) 11110000 F0 = Exclusive status 01000011 43 = YAMAHA ID 01111110 7E = Style 00000011 03 = type 2 0dddddddd = note1 0dddddddd = note2 0dddddddd = note3 . . 0dddddddd = note10 11110111 F7 = End of Exclusive	-	-			O				X		

●: Transmitted via panel operations

System Exclusive Messages (XG)

[MIDI]

MIDI Event	Data Format	Voice		MIDI Reception					MIDI Transmission			
		Regular/Drum/ Natural/Organ Voice	Mic/Vocal Harmony	Song	Right1/ Right2/ Left	Keyboard	Style	Extra	Right1/ Right2/ Left	Style	Song	Upper Lower
XG Parameter Changes	F0 43 1n 4C hh mm ll dd ... F7 11110000 F0 = Exclusive status 01000011 43 = YAMAHA ID 0001nnnn 1n = Device Number n = always 0 (when transmit), n = 0-F (when receive) 01001100 4C = Model ID 0hhhhhhh hh = Address High 0mmmmmmm mm= Address Mid 0lllllll ll = Address Low 0ddddddd dd = Data : : 11110111 F7 = End of Exclusive	* Refer to XG Parameter Change Table.		O * Refer to XG Parameter Change Table.					O * Refer to XG Parameter Change Table.			
XG Bulk Dump	F0 43 0n 4C aa bb hh mm ll dd ... dd cc F7 11110000 F0 = Exclusive status 01000011 43 = YAMAHA ID 0000nnnn 0n = Device Number n = always 0 (when transmit), n = 0-F (when receive) 01001100 4C = Model ID 0aaaaaaa aa = Byte Count MSB 0bbbbbbb bb = Byte Count LSB 0hhhhhhh hh = Address High 0mmmmmmm mm= Address Mid 0lllllll ll = Address Low 0ddddddd dd = Data : : 0ddddddd dd = Data 0ccccccc cc = Checksum 11110111 F7 = End of Exclusive	* Refer to XG Parameter Change Table.		O * Refer to XG Parameter Change Table.					O * Refer to XG Parameter Change Table.			
XG Parameter Request	F0 43 3n 4C hh mm ll F7 11110000 F0 = Exclusive status 01000011 43 = YAMAHA ID 0011nnnn 3n = Device Number n = always 0 (when transmit), n = 0-F (when receive) 01001100 4C = Model ID 0hhhhhhh hh = Address High 0mmmmmmm mm= Address Mid 0lllllll ll = Address Low 11110111 F7 = End of Exclusive	-	-	O * Refer to XG Parameter Change Table.					O * Refer to XG Parameter Change Table.			
XG Dump Request	F0 43 2n 4C hh mm ll F7 11110000 F0 = Exclusive status 01000011 43 = YAMAHA ID 0010nnnn 2n = Device Number n = always 0 (when transmit), n = 0-F (when receive) 01001100 4C = Model ID 0hhhhhhh hh = Address High 0mmmmmmm mm= Address Mid 0lllllll ll = Address Low 11110111 F7 = End of Exclusive	-	-	O * Refer to XG Parameter Change Table.					O * Refer to XG Parameter Change Table.			

System Exclusive Messages (Clavinova compliance)

11110000 F0 = Exclusive status
01000011 43 = YAMAHA ID
01110011 73 = Clavinova ID
: :
11110111 F7 = End of Exclusive

[MIDI]

MIDI Event	Data Format	Voice		MIDI Reception					MIDI Transmission			
		Regular/Drum/ Natural/Organ Voice	Mic/Vocal Harmony	Song	Right1/ Right2/ Left	Keyboard	Style	Extra	Right1/ Right2/ Left	Style	Song	Upper Lower
Internal Clock	F0 43 73 01 02 F7 00000001 01 = Model ID (Clavinova common ID) 00000010 02 = Internal Clock Substatus	-	-			O			X			
External Clock	F0 43 73 01 03 F7 00000001 01 = Model ID (Clavinova common ID) 00000011 03 = External Clock Substatus	-	-			O					X	
Organ Flutes data Bulk Dump	F0 43 73 01 06 0B 00 00 01 06 0n [Bulk Data] sum 01H Model ID (Clavinova common ID) 06H Bulk ID 0BH Bulk No. (Organ Flutes data Bulk Dump) 00H, 00H, 01H, 06H Data Length:16bytes 1st Channel No. 0nH 2nd Footage [1'] 00 - 08H 3rd [1 1/3'] 00 - 08H 4th [1 3/5'] 00 - 08H 5th [2'] 00 - 08H 6th [2 2/3'] 00 - 08H 7th [4'] 00 - 08H 8th [5 1/3'] 00 - 08H 9th [8'] 00 - 08H 10th [16'] 00 - 08H 11th [Attack 2'] 00 - 08H 12th [Attack 2 2/3'] 00 - 08H 13th [Attack 4'] 00 - 08H 14th Settings [Attack Length] 00 - 08H 15th [Response] 00 - 08H 16th [Attack Mode] 00 - 01H 00H: Each, 01H: First 17th [Wave Variation] 00 - 01H 00H: Sine, 01H: Vintage 18th [Volume] 01 - 09H 19th [aux] 00H 20th [aux] 00H 21th [aux] 00H 22th [aux] 00H sum Check Sum = 0-sum (BULK DATA)	O (Organ Flute)	X	O	O	X	X	O	●	X	O	X

●: Transmitted via panel operations

System Exclusive Messages (Natural Voice)

[MIDI]

MIDI Event	Data Format	Voice		MIDI Reception					MIDI Transmission			
		Regular/Drum/ Natural/Organ Voice	Mic/Vocal Harmony	Song	Right1/ Right2/ Left	Keyboard	Style	Extra	Right1/ Right2/ Left	Style	Song	Upper Lower
String Resonance Depth	F0 43 73 01 50 11 0n 02 dd F7 11110000 F0 = Exclusive status 01000011 43 = YAMAHA ID 01110011 73 = Clavinova ID 00000001 01 = Model ID (Clavinova common ID) 01010000 50 = SubID 00010001 11 = SubID 0000nnnn 0n = Channel (00...0F) 00000010 02 = SubID (String Resonance Depth) 0ddddddd dd = Depth (00...48) 11110111 F7 = End of Exclusive CVP-301: X CVP-303: X CVP-305: O CVP-307: O CVP-309 (GP): O	O Available for song Natural Voices.	X	O	O	X	X	O	●	X	O	X
Sustain Sample Depth	F0 43 73 01 50 11 0n 03 dd F7 11110000 F0 = Exclusive status 01000011 43 = YAMAHA ID 01110011 73 = Clavinova ID 00000001 01 = Model ID (Clavinova common ID) 01010000 50 = SubID 00010001 11 = SubID 0000nnnn 0n = Channel (00...0F) 00000011 03 = SubID (Sustain Sample Depth) 0ddddddd dd = Depth (00...48) 11110111 F7 = End of Exclusive CVP-301: X CVP-303: O CVP-305: O CVP-307: O CVP-309 (GP): O	O Available for song Natural Voices.	X	O	O	X	X	O	●	X	O	X
Key Off Sampling Depth	F0 43 73 01 50 11 0n 04 dd F7 11110000 F0 = Exclusive status 01000011 43 = YAMAHA ID 01110011 73 = Clavinova ID 00000001 01 = Model ID (Clavinova common ID) 01010000 50 = SubID 00010001 11 = SubID 0000nnnn 0n = Channel (00...0F) 00000100 04 = SubID (Key Off Sampling Depth) 0ddddddd dd = Depth (00...50) 11110111 F7 = End of Exclusive CVP-301: X CVP-303: O CVP-305: O CVP-307: O CVP-309 (GP): O	O Available for song Natural Voices.	X	O	O	X	X	O	●	X	O	X
Soft Pedal Depth	F0 43 73 01 50 11 0n 05 dd F7 11110000 F0 = Exclusive status 01000011 43 = YAMAHA ID 01110011 73 = Clavinova ID 00000001 01 = Model ID (Clavinova common ID) 01010000 50 = SubID 00010001 11 = SubID 0000nnnn 0n = Channel (00...0F) 00000101 05 = SubID (Soft Pedal Depth) 0ddddddd dd = Depth (00...7F) 11110111 F7 = End of Exclusive CVP-301: O CVP-303: O CVP-305: O CVP-307: O CVP-309 (GP): O	O Available for song Natural Voices.	X	O	O	X	X	O	●	X	O	X

●: Transmitted via panel operations

System Exclusive Messages (Special Operators)

[MIDI]

MIDI Event	Data Format	Voice		MIDI Reception					MIDI Transmission			
		Regular/Drum/ Natural/Organ Voice	Mic/Vocal Harmony	Song	Right1/ Right2/ Left	Keyboard	Style	Extra	Right1/ Right2/ Left	Style	Song	Upper Lower

System Exclusive Messages Special Operators (Vocal Harmony Additional Parameters)

Vocal Harmony

CVP-301	X
CVP-303	O
CVP-305	O
CVP-307	O
CVP-309 (GP)	O

[MIDI]

MIDI Event	Data Format	Voice		MIDI Reception					MIDI Transmission			
		Regular/Drum/ Natural/Organ Voice	Mic/Vocal Harmony	Song	Right1/ Right2/ Left	Keyboard	Style	Extra	Right1/ Right2/ Left	Style	Song	Upper Lower
Vocal Harmony Pitch to Note ON/OFF	F0 43 73 01 11 0n 50 00 dd F7 11110000 F0 = Exclusive status 01000011 43 = YAMAHA ID 01110011 73 = Clavinova ID 00000001 01 = Model ID (Clavinova common ID) 00010001 11 = Special Operators 0000nnnn 0n = Channel No. (Always 00) 01010000 50 = Vocal Harmony Additional Parameter Control No. 00000000 00 = Pitch to Note Parameter No. 0ddddddd dd = data (00H: Off, 01H: On) 11110111 F7 = End of Exclusive	X	O			O				●		
Vocal Harmony Pitch to Note Part	F0 43 73 01 11 0n 50 01 dd F7 11110000 F0 = Exclusive status 01000011 43 = YAMAHA ID 01110011 73 = Clavinova ID 00000001 01 = Model ID (Clavinova common ID) 00010001 11 = Special Operators 0000nnnn 0n = Channel No. (Always 00) 01010000 50 = Vocal Harmony Additional Parameter Control No. 00000001 01 = Pitch to Note Part Parameter No. 0ddddddd dd = data 00H: Right1 01H: Right2 02H: Left 03H: (not used) 04H: Upper 11110111 F7=End of Exclusive	X	O			O				●		
Vocal Harmony Vocoder Part (Harmony Part (Panel))	F0 43 73 01 11 0n 50 10 dd F7 11110000 F0 = Exclusive status 01000011 43 = YAMAHA ID 01110011 73 = Clavinova ID 00000001 01 = Model ID (Clavinova common ID) 00010001 11 = Special Operators 0000nnnn 0n = Channel No. (Always 00) 01010000 50 = Vocal Harmony Additional Parameter Control No. 00010000 10 = Vocoder Part Parameter No. 0ddddddd dd = data 00H: Off 01H: Upper 02H: Lower 11110111 F7 = End of Exclusive	X	O			O				●		

●: Transmitted via panel operations

System Exclusive Messages (Others)

[MIDI]

MIDI Event	Data Format	Voice		MIDI Reception					MIDI Transmission			
		Regular/Drum/ Natural/Organ Voice	Mic/Vocal Harmony	Song	Right1/ Right2/ Left	Keyboard	Style	Extra	Right1/ Right2/ Left	Style	Song	Upper Lower
MIDI Master Tuning	F0 43 1n 27 30 00 00 0m 0l cc F7 11110000 F0 = Exclusive status 01000011 43 = YAMAHA ID 0001nnnn 1n n = always 0 (when transmit), n = 0-F (when receive) 00100111 27 = Model ID of TG100 00110000 30 = Address High 00000000 00 = Address Mid 00000000 00 = Address Low 0000mmmm 0m = Master Tune MSB 0000llll 0l = Master Tune LSB 0ccccccc cc = don't care 11110111 F7 = End of Exclusive	O	O			O					X		
MIDI Key LED Mode	F0 43 73 01 11 0n 47 dd F7 11110000 F0 = Exclusive status 01000011 43 = YAMAHA ID 01110011 73 = Clavinova ID 00000001 01 = Model ID (Clavinova common ID) 00010001 11 = Special Operators 0000nnnn 0n = Channel No. 01000111 47 = MIDI Key LED Mode On Off Substatus 0ddddddd dd = data 00H: Light Off & Sound 01H: Light On & No Sound 02H: Light On & Sound 03H: Light Off & No Sound 11110111 F7 = End of Exclusive When set to Key LED + No Sound (01H) and Key LED (02H), the LED is turned on/ off by a note on message of the channel specified via the Channel No. 9n, note, Vel=0: off 9n, note, Vel=1: flush 9n, note, Vel=2~: on Up to two channels can be specified simultaneously. A channel become available with Normal (00H). CVP-301 O CVP-303 O CVP-305 O CVP-307 O CVP-309 (GP) O	-	-	O	X	X	X	X	X	X	X	X

Clavinova®

CVP-303 / CVP-303M / CVP-303C

PARTS LIST

CONTENTS

OVERALL ASSEMBLY 2
MAIN UNIT 4
BACK TOP BOARD ASSEMBLY 9
TOP BOARD ASSEMBLY 10
ARM ASSEMBLY L 12
ARM ASSEMBLY R 13
FRONT RAIL ASSEMBLY 14
KEYBED ASSEMBLY 15
END BLOCK ASSEMBLY L 16
END BLOCK ASSEMBLY R 17
KEYBOARD ASSEMBLY 18
JACK ASSEMBLY 20
MIC. & PHONES UNIT 21
SIDE BOARD ASSEMBLY(L, R) 22
KEY COVER & PANEL ASSEMBLY 23
KEY COVER ASSEMBLY 24
PANEL ASSEMBLY 26
MA80S ASSEMBLY 29
FU60 ASSEMBLY 30
PEDAL BOX ASSEMBLY 31
PEDAL ASSEMBLY 32
BENCH(BC-100DR/BC-100MH/BC-100CH) 33
ELECTRICAL PARTS ..... 34~59

Notes : DESTINATION ABBREVIATIONS

A : Australian model	M : South African model
B : British model	O : Chinese model
C : Canadian model	Q : South-east Asia model
D : German model	T : Taiwan model
E : European model	U : U.S.A. model
F : French model	V : General export model (110V)
H : North European model	W : General export model (220V)
I : Indonesian model	N,X: General export model
J : Japanese model	Y : Export model
K : Korean model	

WARNING

Components having special characteristics are marked ⚠ and must be replaced with parts having specification equal to those originally installed.

- The numbers “QTY” show quantities for each unit.
- The parts with “--” in “PART NO.” are not available as spare parts.
- This mark “ } ” in the REMARKS column means these parts are interchangeable.
- The second letter of the shaded ( ) part number is O, not zero.
- The second letter of the shaded ( ) part number is I, not one.

OVERALL ASSEMBLY

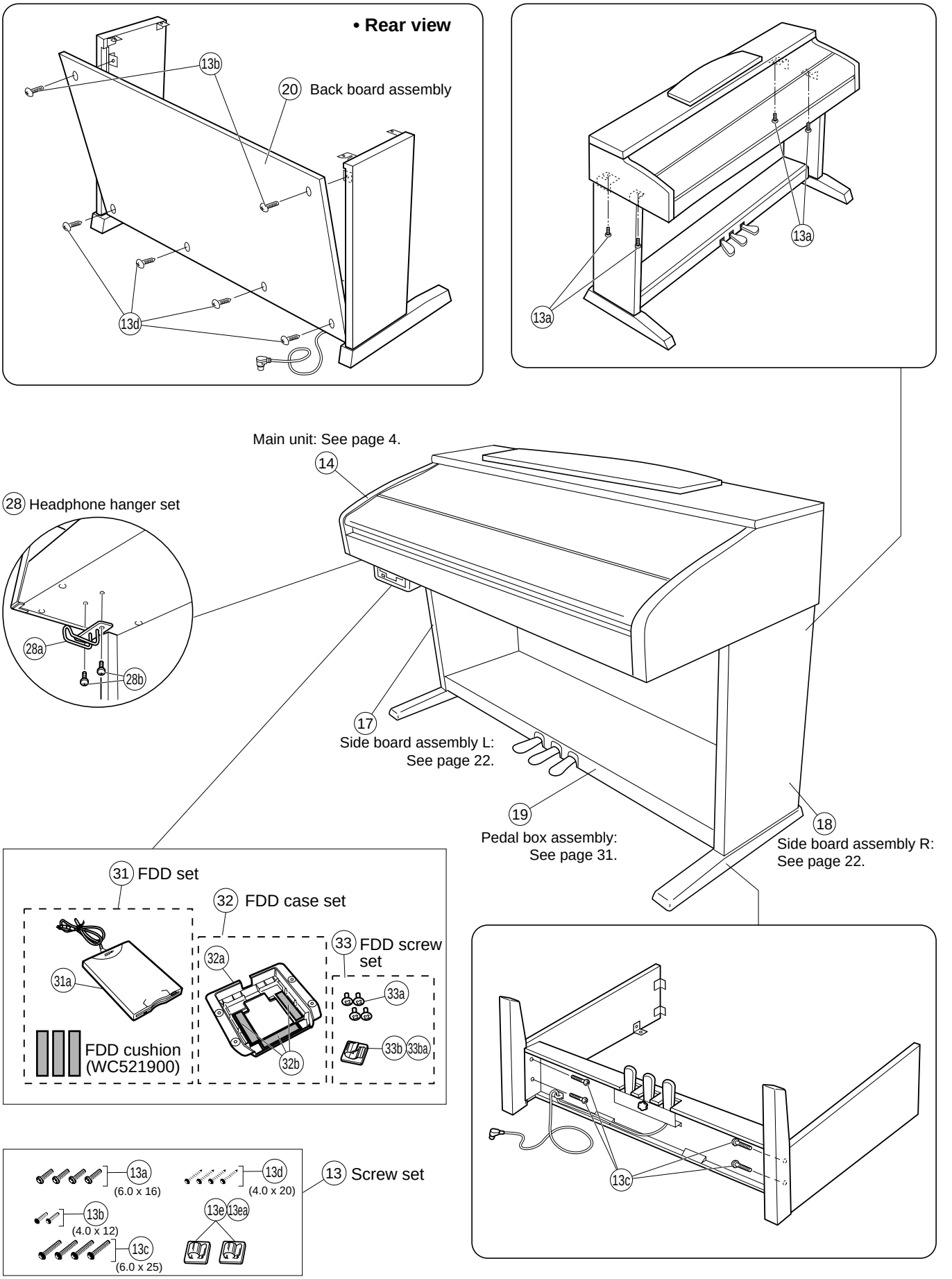

	REF NO.	PART NO.	DESCRIPTION			REMARKS	QTY	RANK
			OVERALL ASSEMBLY			CVP-303/CVP-303M/CVP-303C		
	13	**V5283500**	Screw Set			CVP-303/CVP-303M		03
	13	**V9375600**	Screw Set			CVP-303C		04
	13a	**EG360020**	Bind Head Screw	6.0X16 MFZN2BL			4	01
	13b	**VP367300**	Truss Head Screw	4.0X12 MFZN2BL		CVP-303/CVP-303M	2	01
	13b	**V6135000**	Truss Head Screw	4.0X12 MFC2BR		CVP-303C	2	01
	13c	**VQ448400**	Truss Head Screw	6.0X25 MFZN2BL			4	01
	13d	**03747290**	Truss Head Tapping Screw-1	4.0X20 MFZN2BL		CVP-303/CVP-303M	4	01
	13d	**VB164600**	Truss Head Tapping Screw-1	4.0X20 MFC2BR		CVP-303C	4	01
	13e	**VR410300**	Cord Clamp Set					03
	13ea	**VP592100**	Cord Clamper	DKN-5B(VHB)			2	03
	14	**--**	Main Unit			CVP-303 U (WC14640)		
	14	**--**	Main Unit			CVP-303 E,B (WC14650)		
	14	**--**	Main Unit			CVP-303 N (WC14660)		
	14	**--**	Main Unit			CVP-303 K (WD26530)		
	14	**--**	Main Unit			CVP-303M U (WC14680)		
	14	**--**	Main Unit			CVP-303M E,B (WC14690)		
	14	**--**	Main Unit			CVP-303M N (WC14700)		
	14	**--**	Main Unit			CVP-303M K (WD26540)		
	14	**--**	Main Unit			CVP-303C U (WC14720)		
	14	**--**	Main Unit			CVP-303C E,B (WC14730)		
	14	**--**	Main Unit			CVP-303C N (WC14740)		
	14	**--**	Main Unit			CVP-303C K (WD26550)		
*	17	**WC166600**	Side Board Assembly L	LEFT		CVP-303		
*	17	**WC167100**	Side Board Assembly L	LEFT		CVP-303M		
*	17	**WC167900**	Side Board Assembly L	LEFT		CVP-303C		
*	18	**WC166700**	Side Board Assembly R	RIGHT		CVP-303		
*	18	**WC167200**	Side Board Assembly R	RIGHT		CVP-303M		
*	18	**WC168000**	Side Board Assembly R	RIGHT		CVP-303C		
	19	**--**	Pedal Box Assembly			CVP-303 (WC16680)		
	19	**--**	Pedal Box Assembly			CVP-303M (WC16730)		
	19	**--**	Pedal Box Assembly			CVP-303C (WC16810)		
*	20	**WC166900**	Back Board Assembly	ROSE		CVP-303		
*	20	**WC167400**	Back Board Assembly	MAHOGANY		CVP-303M		
*	20	**WC168200**	Back Board Assembly	CHERRY		CVP-303C		
	28	**V8740600**	Headphone Hanger Set					07
	28a	**V8972600**	Headphone Hanger					04
	28b	**VT196400**	Truss Head Screw	4.0X10 MFZN2BL			2	01
*	31	**AAX58580**	FDD Set			U,E,B WD46730+WC52190X3		
	31a	**--**	FDD	USB-FDD YD-8U10		U,E,B (WD46730)		
	32	**WC571200**	FDD Case Set			U,E,B		05
	32a	**--**	Holder, FDD			U,E,B (WC52210)		
	32b	**WC521900**	Cushion Black			U,E,B	3	
	33	**WD062800**	Screw Set, FDD			U,E,B		03
	33a	**VT196400**	Truss Head Screw	4.0X10 MFZN2BL		U,E,B	4	01
	33b	**--**	Cord Clamp Set			U,E,B (WA29790)		
	33ba	**VP592100**	Cord Clamper	DKN-5B(VHB)		U,E,B		03
			ACCESSORIES					
⚠		**VT015800**	AC Cord	U 2P 2.44m 7A		U		06
⚠		**V2917000**	AC Cord	UC 2P 7A 2.44m		U		06
⚠		**VT015900**	AC Cord	E 2P 2.5m		E,N		05
⚠		**V2917100**	AC Cord	E 2P 2.5m 2.5A		E,N		05
⚠		**V3126300**	AC Cord	E 2P 2.5m		E,N		
⚠		**VT016000**	AC Cord	B 2P 2.5m		B		08
⚠		**V3126500**	AC Cord	B 2P 2.5m		B		
⚠		**V8911300**	AC Cord	K 2P 2.5m 2.5A		K		05
		V5531400	Bench	BC-100DR		CVP-303 U,N,K		20
		V5531500	Bench	BC-100MH		CVP-303M U,N,K		20
		V5531600	Bench	BC-100CH		CVP-303C U,N,K		20
⚠		**VK726100**	AC Adaptor	CCT-5902-0701		N		03
		X4870B00	CD-ROM	CDROM 12cm				
		X5106A00	Smart Media	K9S2808V0C-SSB0000		N,K		11
			TOOL					
		TX000670	Rod					99

✻: New Parts

RANK: Japan only

MAIN UNIT

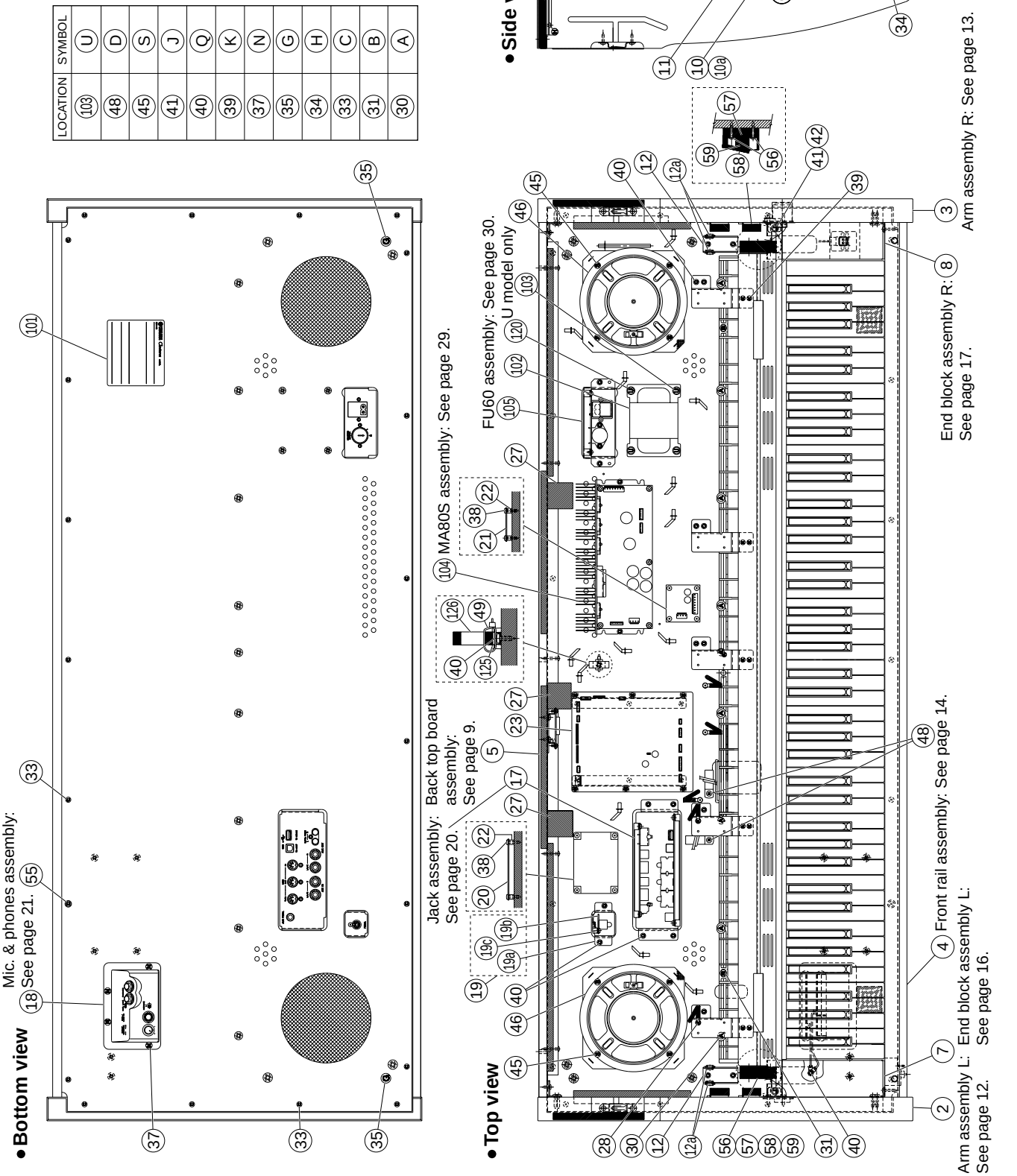
LOCATION
SYMBOL
103 U
48 D
45 S
41 J
40 Q
39 K
37 N
35 G
34 H
33 C
31 B
30 A
● Bottom view
Mic. & phones assembly: See page 21.
● Top view
Jack assembly: See page 20.
Back top board assembly: See page 9.
MA80S assembly: See page 29.
FU60 assembly: See page 30.
U model only
● Side view
Keybed assembly: See page 15.
Keyboard assembly: See page 18.
End block assembly R: See page 17.
Arm assembly R: See page 13.
Front rail assembly: See page 14.
Arm assembly L: See page 12.
End block assembly L: See page 16.

● Rear view

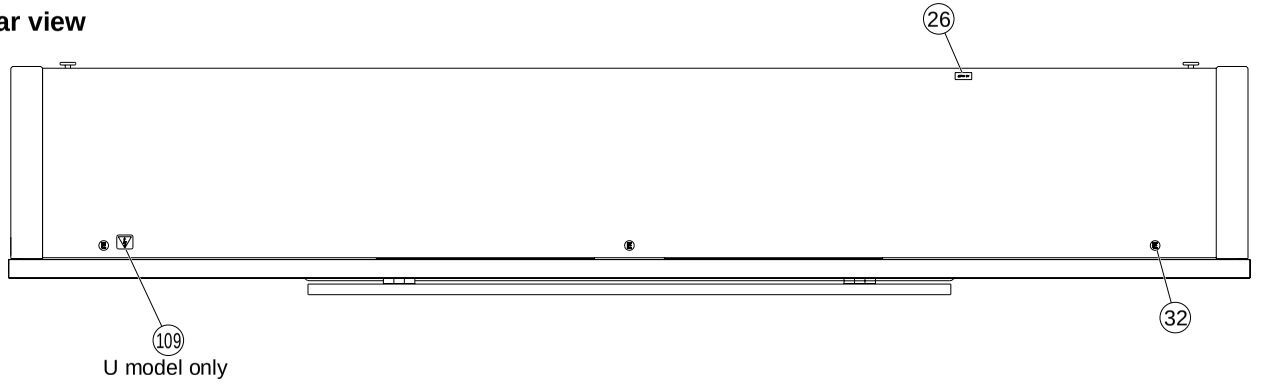

LOCATION	SYMBOL
106	V
44	M
43	L
40	Q
39	K
32	E

● Top view

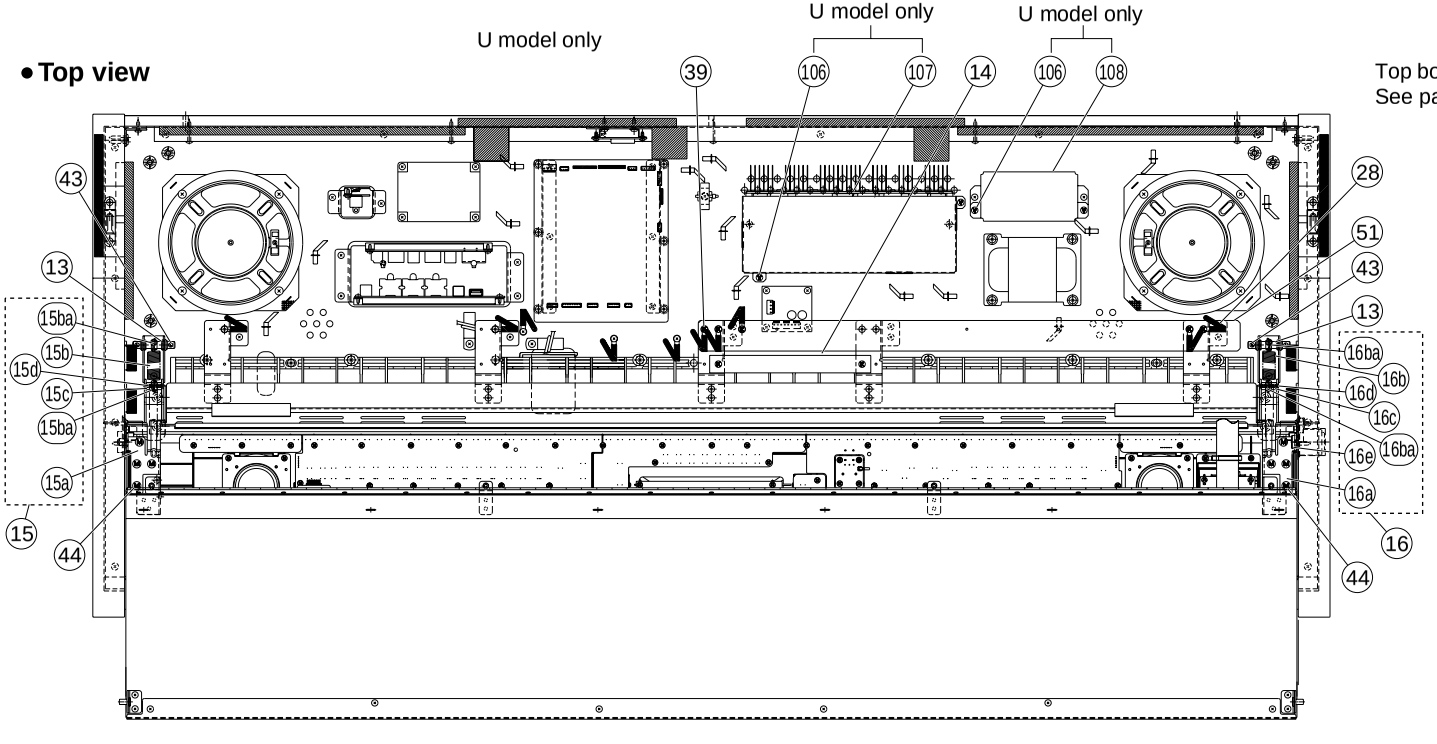

● Side view

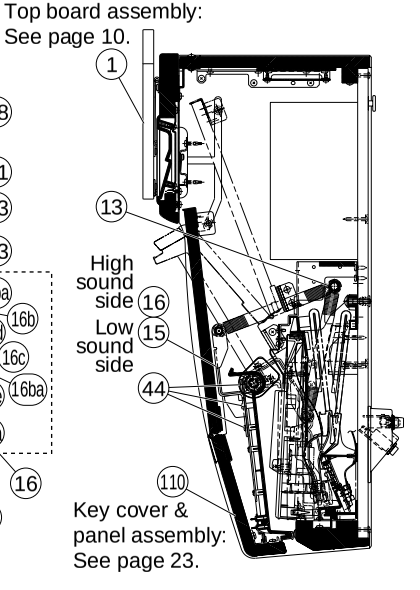

	REF NO.	PART NO.	DESCRIPTION			REMARKS		QTY	RANK
			MAIN UNIT			CVP-303/CVP-303M/CVP-303C			
		--	Main Unit			CVP-303 U	(WC14640)		
		--	Main Unit			CVP-303 E,B	(WC14650)		
		--	Main Unit			CVP-303 N	(WC14660)		
		--	Main Unit			CVP-303 K	(WD26530)		
		--	Main Unit			CVP-303M U	(WC14680)		
		--	Main Unit			CVP-303M E,B	(WC14690)		
		--	Main Unit			CVP-303M N	(WC14700)		
		--	Main Unit			CVP-303M K	(WD26540)		
		--	Main Unit			CVP-303C U	(WC14720)		
		--	Main Unit			CVP-303C E,B	(WC14730)		
		--	Main Unit			CVP-303C N	(WC14740)		
		--	Main Unit			CVP-303C K	(WD26550)		
	A	--	Composite Common Parts			CVP-303	(WC15760)		
	A	--	Composite Common Parts			CVP-303M	(WC16140)		
	A	--	Composite Common Parts			CVP-303C	(WC16650)		
	101	--	Name Plate			CVP-303 U	(WC15990)		
	101	--	Name Plate			CVP-303 E,B	(WC16010)		
	101	--	Name Plate			CVP-303 N	(WC16020)		
	101	--	Name Plate			CVP-303 K	(WD21840)		
	101	--	Name Plate			CVP-303M U	(WC16040)		
	101	--	Name Plate			CVP-303M E,B	(WC16060)		
	101	--	Name Plate			CVP-303M N	(WC16070)		
	101	--	Name Plate			CVP-303M K	(WD21850)		
	101	--	Name Plate			CVP-303C U	(WC16090)		
	101	--	Name Plate			CVP-303C E,B	(WC16110)		
	101	--	Name Plate			CVP-303C N	(WC16120)		
	101	--	Name Plate			CVP-303C K	(WD21860)		
⚠ *	102	**X4857B00**	Power Transformer	UL A		U			
⚠ *	102	**X4862B00**	Power Transformer	IEC E		E,B,K			
⚠ *	102	**X4858B00**	Power Transformer	IEC/EN60691 E		N			
*	104	**WC028900**	MA80S Assembly			U			
*	104	**WC029000**	MA80S Assembly			E,N,B,K			
	105	**VT152100**	FU60 Assembly			U			10
	105	**VT152200**	FU60 Assembly			E,B,K			10
	105	**VT153300**	FU60 Assembly			N			12
	106	**EP030240**	Bind Head Tapping Screw-1	3.5X12 MFZN2Y		U		4	01
	107	--	MA Cover Assembly			U	(V766590)		
	108	**VU348800**	Cover, FU			U			06
	109	**VB951400**	Graphic Mark	MKX-5 UL		U			03
	109	**V8462100**	Graphic Mark	YMMA		U			
	110	--	Key Cover & Panel Assembly			CVP-303	(WC16760)		
	110	--	Key Cover & Panel Assembly			CVP-303M	(WC17370)		
	110	--	Key Cover & Panel Assembly			CVP-303C	(WC16870)		
	120	**VK287600**	Flat Washer	4.0X12X1.0 MFZN2Y		U		4	01
		--	Composite Common Parts			CVP-303	(WC15760)		
		--	Composite Common Parts			CVP-303M	(WC16140)		
		--	Composite Common Parts			CVP-303C	(WC16650)		
*	1	**WC169000**	Top Board Assembly			CVP-303			
*	1	**WC169200**	Top Board Assembly			CVP-303M			
*	1	**WC169300**	Top Board Assembly			CVP-303C			
*	2	**WC282400**	Arm Assembly L	LEFT		CVP-303			
*	2	**WC282600**	Arm Assembly L	LEFT		CVP-303M			
*	2	**WC282800**	Arm Assembly L	LEFT		CVP-303C			
*	3	**WC282500**	Arm Assembly R	RIGHT		CVP-303			
*	3	**WC282700**	Arm Assembly R	RIGHT		CVP-303M			
*	3	**WC282900**	Arm Assembly R	RIGHT		CVP-303C			
	4	--	Front Rail Assembly			CVP-303	(WC16260)		
	4	--	Front Rail Assembly			CVP-303M	(WC16410)		
	4	--	Front Rail Assembly			CVP-303C	(WC16590)		
	5	--	Back Top Board Assembly			CVP-303	(WC28300)		
	5	--	Back Top Board Assembly			CVP-303M	(WC28310)		
	5	--	Back Top Board Assembly			CVP-303C	(WC28320)		
	6	--	Keybed Assembly			CVP-303/CVP-303M	(WC16700)		
	6	--	Keybed Assembly			CVP-303C	(WC16850)		
*	7	**WC133100**	End Block Assembly L	LEFT		CVP-303			
*	7	**WC135000**	End Block Assembly L	LEFT		CVP-303M			
*	7	**WC136000**	End Block Assembly L	LEFT		CVP-303C			
	8	--	End Block Assembly R	RIGHT		CVP-303	(WC54990)		

*: New Parts

RANK: Japan only

	REF NO.	PART NO.	DESCRIPTION			REMARKS		QTY	RANK
	8	--	End Block Assembly R	RIGHT		CVP-303M	(WC55000)		
	8	--	End Block Assembly R	RIGHT		CVP-303C	(WC55010)		
	9	**V8278500**	Keyboard Assembly	GHD_EBUS A88 K6					51
*	10	**WC346600**	Angle						
	10a	--	Felt, MK				(WD07120)		
	11	--	Angle, MT Assembly				(WC13410)	5	
	12	--	Spring Holder Assembly				(WC13420)	2	
	12a	**VS368500**	Bushing					4	03
	13	--	Rod	A			(WC08420)	2	
	14	--	Crosspiece	185X20XT3			(WD76560)		
*	15	**WC138200**	Turning Axle Assembly L	LEFT					
	15a	--	Turning Axle Angle L	LEFT			(WC08330)		
	15b	--	Spring Assembly				(WD06770)		
	15ba	**VS368500**	Bushing					2	03
	15c	--	Arm Rod				(WC08270)		
	15d	**EC030070**	Flat Head Screw	3.0X8 MFZN2Y				2	01
*	16	**WC138300**	Turning Axle Assembly R	RIGHT					
	16a	--	Turning Axle Angle R	RIGHT			(WC08340)		
	16b	--	Spring Assembly				(WD06770)		
	16ba	**VS368500**	Bushing					2	03
	16c	--	Arm Rod				(WC08270)		
	16d	**EC030070**	Flat Head Screw	3.0X8 MFZN2Y				2	01
	16e	--	Spacer				(WD38610)		
	17	--	Jack Assembly				(WC18790)		
	18	--	Mic. & Phones Unit				(WC14850)		
	19	--	PK Connector			PEDAL	(WC15270)		
	19a	**V7585400**	Angle, PK Connector	BEIGE-PRINT					05
*	19b	**WC561200**	Circuit Board	PJK					
	19c	**EP600190**	Bind Head Tapping Screw-B	3.0X8 MFZN2BL				2	01
*	20	**WC034000**	Circuit Board	EQ					
*	21	**WC175500**	Circuit Board	NET1					
	22	**CB040950**	Spacer					8	03
*	23	**WC022600**	Circuit Board	DM					
	26	**VT501000**	Label, AC Inlet						03
	27	--	Electrical Adhesive Tape	AL-40 40X20m			(WA53090)		
	28	**CB817510**	Cord Binder	S-14B				7	03
	30	**VV040700**	Pan Head Screw	PW5.0X25 MFZN2Y				9	01
	31	**EP040230**	Bind Head Tapping Screw-1	4.0X14 MFZN2Y				2	01
	32	**V6207400**	Truss Head Screw	4.0X16 MFZN2BL		CVP-303/CVP-303M		3	01
	32	**V9446400**	Truss Head Screw	4.0X16 MFC2BR		CVP-303C		3	01
	33	**EN630190**	Truss Head Tapping Screw-1	3.5X25 MFZN2BL				21	01
	34	**EP030190**	Bind Head Tapping Screw-1	3.5X16 MFZN2Y				10	01
	35	**VN887900**	Guide Screw	+ 6.0X20. 3-14				2	03
	37	**EP030250**	Bind Head Tapping Screw-1	3.5X14 MFZN2BL				4	01
	38	**EP030470**	Bind Head Tapping Screw-1	3.5X20 MFZN2Y				8	01
	39	**EP600250**	Bind Head Tapping Screw-B	3.0X8 MFZN2Y				27	01
	40	**EP030240**	Bind Head Tapping Screw-1	3.5X12 MFZN2Y				26	01
	41	**VS205900**	Bind Head Tapping Screw-B	4.0X20 MFZN2BL				2	01
	42	**VA226100**	Flat Washer	4.0X8X0.8 MFZN2Y				2	01
	43	**VD976600**	Bind Head Screw	3.0X8 MFZN2Y				4	01
	44	**EP600220**	Bind Head Tapping Screw-B	3.0X10 MFZN2Y				8	01
*	45	**WD225900**	Truss Head Tapping Screw-1	4.0X23 MFZN2Y				8	
*	46	**X5026A00**	Speaker	16.0cm 6 ohm 40W		WOOFER		2	
	47	**VP834600**	Adhesive Tape	12X50m				8	02
	48	**EN630110**	Truss Head Tapping Screw-1	3.5X12 MFZN2Y				2	
	49	**CB069250**	Cord Holder	BK-1					01
	49	**VV558400**	Cord Binder	AZ-100					01
	51	--	Wire Rail				(WD13570)		
	55	**ET500040**	Flat Washer	4.0X10X0.8 MFZN2BL					01
	56	**EN630080**	Truss Head Tapping Screw-1	3.5X25 MFZN2Y				4	01
	57	--	Stopper				(WD46360)	2	
	58	--	Skin	80X18XT0.5			(WD45830)	2	
	59	--	Cushion	PORON L-24			(WD45820)	2	
	60	**VK102800**	Connector Assembly	KRD-KRD 9P-200					03
	61	--	Connector Assembly	KRD-KRD 10P-250			(VJ98270)		
	62	--	USB Cable	USB L=300 5P			(WC20240)		
	63	--	USB Cable	USB-LF L=400 6P-75			(WD22070)		
	64	--	Connector Assembly	KB-LF 7P-800			(WC36550)		
	64a	**VD947800**	Data Line Filter	ESD-R-25D-B					05
	65	--	Connector Assembly	3D XH 4P-650			(WC20320)		

*: New Parts

RANK: Japan only

	REF NO.	PART NO.	DESCRIPTION			REMARKS	QTY	RANK
	66	--	Connector Assembly	5D PH4P L=650		(WC20280)		
*	67	**WD214900**	Cable	26P 50mm P=1.0		}		
*	67	**WD223100**	Cable	P=1.0-K-26-50		}		
	68	**VK108600**	Connector Assembly	KRD-KRD 11P-350				
	69	--	Connector Assembly	KRD-KRD 5P-800		(VK12100)		
	70	--	Connector Assembly	KRD-KRD 5P-200		(VK10250)		
	71	--	Connector Assembly	+B XH 2P-650		(WC20340)		
	72	--	Connector Assembly	KRD-KRD 7P-400		(VK10970)		
	73	--	Connector Assembly	KRD-KRD 10P-250		(VJ98270)		
	74	**VK111200**	Connector Assembly	KRD-KRD 9P-450				03
	75	--	Connector Assembly	NW VH 4P-200		(WC20350)		
	76	--	Connector Assembly	SP VH 5P-700		(WC20360)		
	77	--	Connector Assembly	GND MIC PH 2P		(V340590)		
	78	--	Connector Assembly	GND HP XH 2P		(VL50740)		
	80	--	Tube Black	SPP-11L		(WD21640)		
	103	**EG340210**	Bind Head Screw	4.0X14 MFZN2Y			4	01
	125	--	Holder	TM2S8-C		(WD27020)		
	126	**VB933800**	Ferrite Core	BP53RB310190100A				04

*: New Parts

RANK: Japan only

BACK TOP BOARD ASSEMBLY

● **Bottom view**

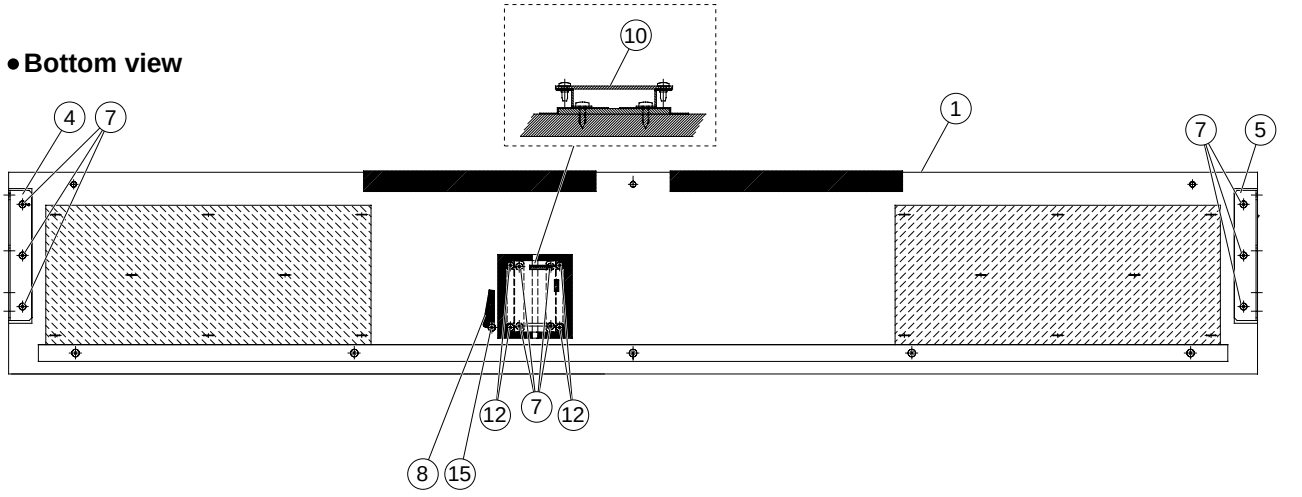

● **Side view**

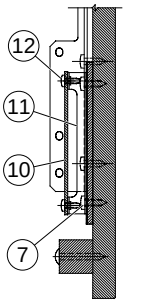

	REF NO.	PART NO.	DESCRIPTION			REMARKS	QTY	RANK
			BACK TOP BOARD ASSEMBLY			CVP-303/CVP-303M/CVP-303C		
		--	Back Top Board Assembly			CVP-303 (WC28300)		
		--	Back Top Board Assembly			CVP-303M (WC28310)		
		--	Back Top Board Assembly			CVP-303C (WC28320)		
*	1	**WD396800**	Back Top Board			CVP-303		
*	1	**WD396900**	Back Top Board			CVP-303M		
*	1	**WD397000**	Back Top Board			CVP-303C		
	4	--	Holder, Back Top Panel L	LEFT		(VV28350)		
	5	--	Holder, Back Top Panel R	RIGHT		(VV28360)		
	7	**EP030240**	Bind Head Tapping Screw-1	3.5X12 MFZN2Y			10	01
	8	**CB817510**	Cord Binder	S-14B				03
*	10	**WC748200**	Circuit Board	DAC1A				
	11	--	Holder			(WC41620)	2	
	12	**EP600250**	Bind Head Tapping Screw-B	3.0X8 MFZN2Y			4	01
	15	**EP030230**	Bind Head Tapping Screw-1	3.5X10 MFZN2Y				01

*: New Parts

RANK: Japan only

TOP BOARD ASSEMBLY

● Top view

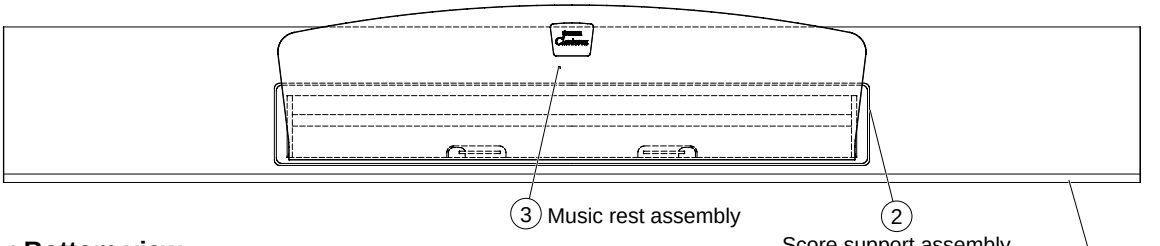

● Side view

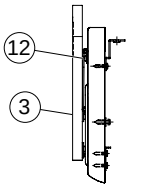

● Bottom view

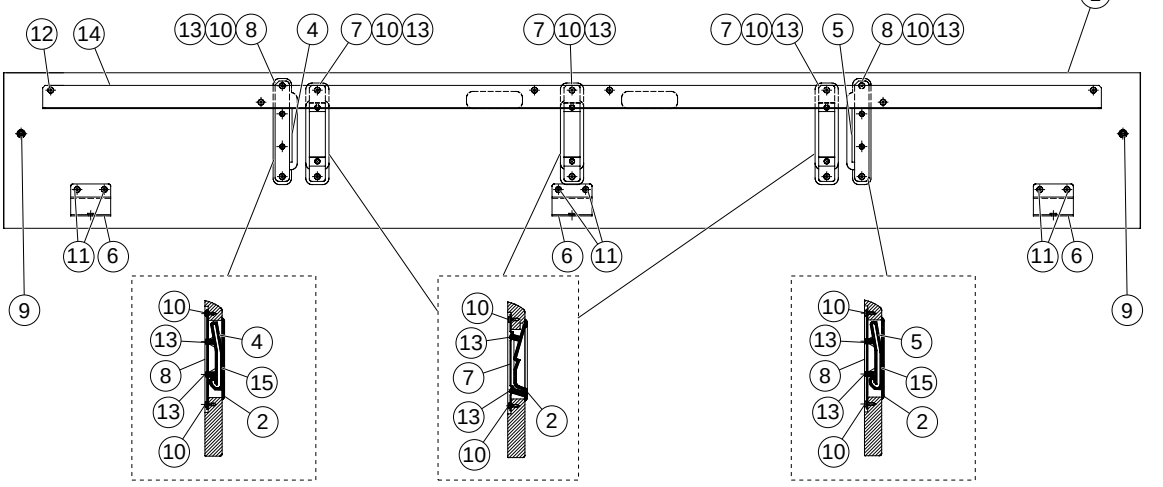

Score Support Assembly

● Top view

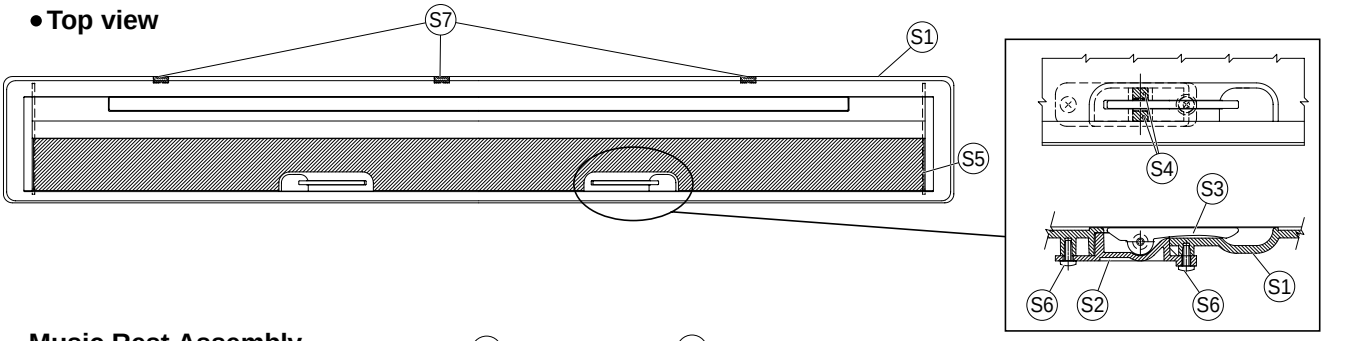

Music Rest Assembly

● Bottom view

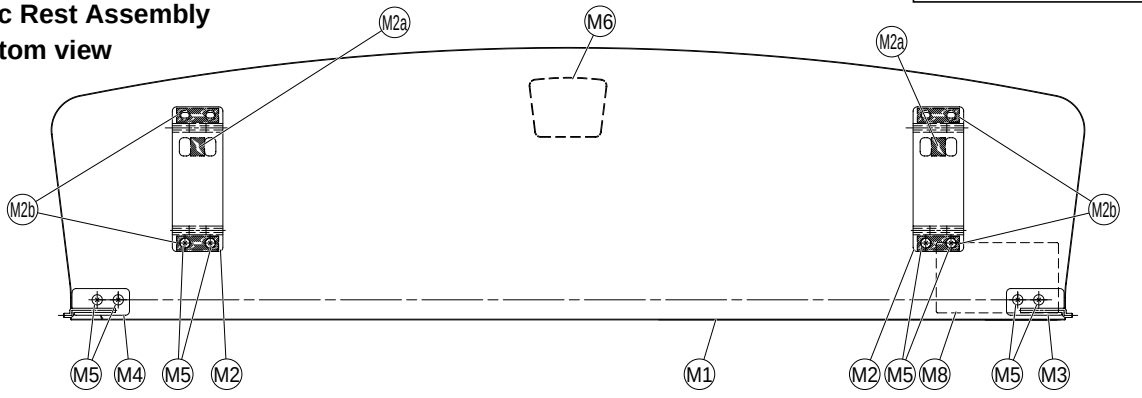

	REF NO.	PART NO.	DESCRIPTION			REMARKS	QTY	RANK
			TOP BOARD ASSEMBLY			CVP-303/CVP-303M/CVP-303C		
*		**WC169000**	Top Board Assembly			CVP-303		
*		**WC169200**	Top Board Assembly			CVP-303M		
*		**WC169300**	Top Board Assembly			CVP-303C		
	1	--	Top Board	DR		CVP-303 (WC08940)		
	1	--	Top Board	MH		CVP-303M (WC08950)		
	1	--	Top Board	CH		CVP-303C (WC08960)		
*	2	**WD544100**	Score Support Assembly			CVP-303		
*	2	**WD544200**	Score Support Assembly			CVP-303M		
*	2	**WD544300**	Score Support Assembly			CVP-303C		
*	3	**WC167700**	Music Rest Assembly			CVP-303		
*	3	**WC167800**	Music Rest Assembly			CVP-303M		
*	3	**WC168300**	Music Rest Assembly			CVP-303C		
	4	--	Music Rest Guide L	LEFT MOLDING		CVP-303/CVP-303M (WC00830)		
	4	--	Music Rest Guide L	LEFT MOLDING		CVP-303C (WC31930)		
	5	--	Music rest Guide R	RIGHT MOLDING		CVP-303/CVP-303M (WC00840)		
	5	--	Music rest Guide R	RIGHT MOLDING		CVP-303C (WC31940)		
	6	**VQ485800**	Holder, Top Board	R			3	05
	7	--	Angle Bracket			(WC06920)	3	
	8	--	Music Rest Guide Angle			(WC06930)	2	
	9	**VV444100**	Strap Screw				2	03
	10	**EP030240**	Bind Head Tapping Screw-1	3.5X12 MFZN2Y			10	01
	11	**EP030190**	Bind Head Tapping Screw-1	3.5X16 MFZN2Y			6	01
	12	**EP030260**	Bind Head Tapping Screw-1	3.5X16 MFZN2BL			10	01
	13	**EP600250**	Bind Head Tapping Screw-B	3.0X8 MFZN2Y			10	01
	14	--	Rail			(WC66650)		
	15	--	Adhesive Tape	#500B 7X40		(WD28450)	2	
*		**WD544100**	Score Support Assembly			CVP-303		
*		**WD544200**	Score Support Assembly			CVP-303M		
*		**WD544300**	Score Support Assembly			CVP-303C		
	S1	--	Score Support	DB		CVP-303 (WC00720)		
	S1	--	Score Support	MH		CVP-303M (WC00740)		
	S1	--	Score Support	CH		CVP-303C (WC00750)		
	S2	**V7113200**	Case, Music Stopper	A			2	01
	S3	**V7113700**	Music Stopper Assembly	BRASS			2	05
	S4	**V7113400**	Bushing				4	09
	S5	--	Skin	700X40.5XT0.5		CVP-303/CVP-303M (WC07570)		
	S5	--	Skin Brown	700X40.5XT0.5		CVP-303C (WC75630)		
	S6	**EP600250**	Bind Head Tapping Screw-B	3.0X8 MFZN2Y			4	01
	S7	--	Nonwoven Fabric Cloth	12X5XT0.35		(V596750)	3	
*		**WC167700**	Music Rest Assembly			CVP-303		
*		**WC167800**	Music Rest Assembly			CVP-303M		
*		**WC168300**	Music Rest Assembly			CVP-303C		
	M1	--	Music Rest	DR		CVP-303 (WC09030)		
	M1	--	Music Rest	MH		CVP-303M (WC09050)		
	M1	--	Music Rest	CH		CVP-303C (WC09060)		
*	M2	**WD498600**	Hinge Assembly				2	
	M2a	--	Skin	13X10X0.5 W89		(WD49710)		
	M2b	--	Nonwoven Fabric Cloth	30X10XT0.9		(WD49720)	2	
*	M3	**WC046800**	Guide Angle L	LEFT				
*	M4	**WC046900**	Guide Angle R	RIGHT				
	M5	**EP030340**	Bind Head Tapping Screw-1	3.5X12 MFZN2BL			8	01
	M6	**V5782300**	Badge	BRASS				05
	M8	--	Notice Label			(WD38560)		

*: New Parts

RANK: Japan only

■ ARM ASSEMBLY L

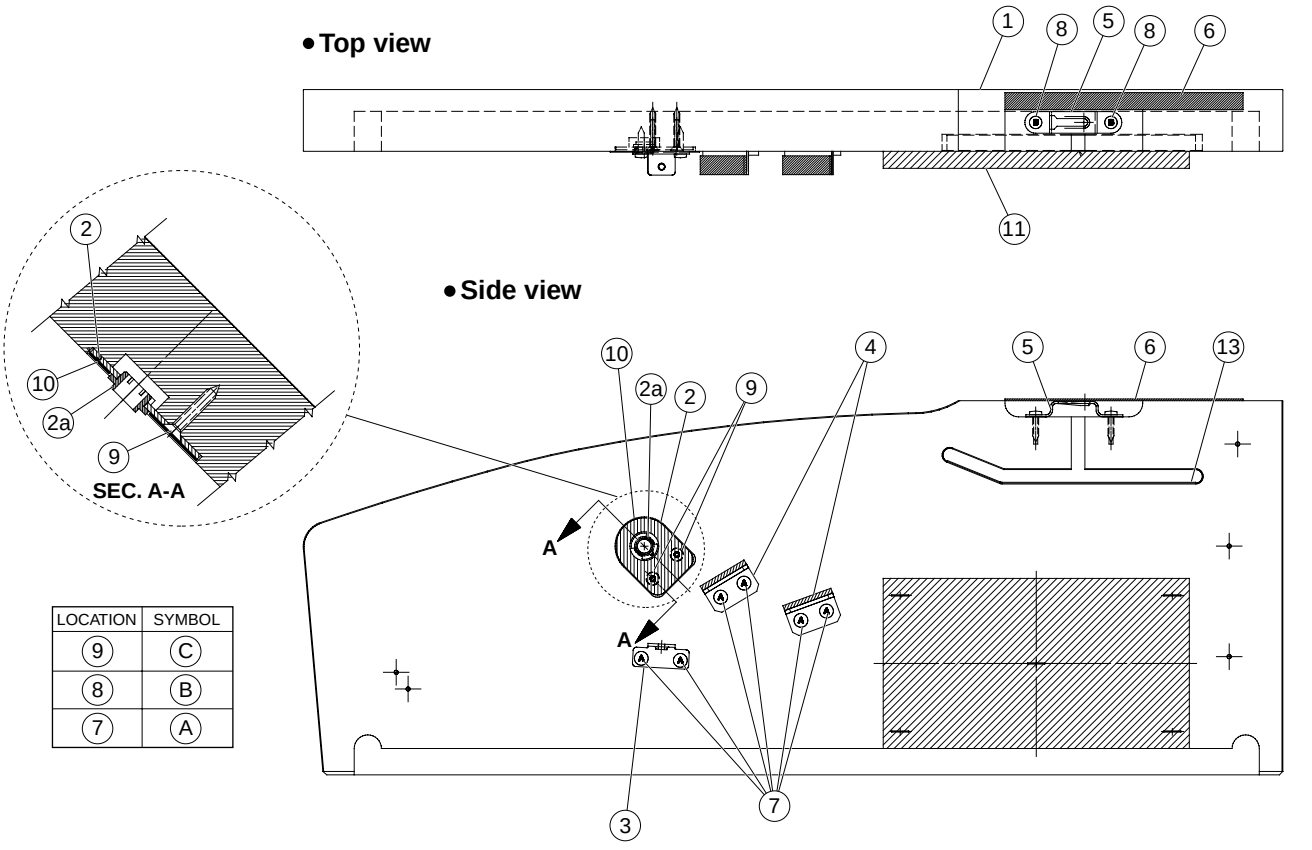

LOCATION	SYMBOL
9	C
8	B
7	A

	REF NO.	PART NO.	DESCRIPTION			REMARKS		QTY	RANK
			ARM ASSEMBLY L	LEFT		CVP-303/CVP-303M/CVP-303C			
*		**WC282400**	Arm Assembly L	LEFT		CVP-303			
*		**WC282600**	Arm Assembly L	LEFT		CVP-303M			
*		**WC282800**	Arm Assembly L	LEFT		CVP-303C			
	1	--	Side Cover L	LEFT		CVP-303	(WC09610)		
	1	--	Side Cover L	LEFT		CVP-303M	(WC12490)		
	1	--	Side Cover L	LEFT		CVP-303C	(WC12750)		
	2	--	Bearing Assembly				(WC57080)		
	2a	**VS368500**	Bushing						03
	3	--	KBL Angle				(WC08550)		
	4	--	Stopper Angle Assembly				(WC13660)	2	
	5	**WA218300**	Holder, Top Board	1.20					01
	6	--	Felt	140X10X1			(WC16130)		
	7	**EP030190**	Bind Head Tapping Screw-1	3.5X16 MFZN2Y				6	01
	8	**EP030260**	Bind Head Tapping Screw-1	3.5X16 MFZN2BL				2	01
*	9	**03739140**	Flat Head Tapping Screw-1	3.5X20 MFZN2Y				2	
	10	--	Seal L Dark Brown			CVP-303/CVP-303M	(WD15810)		
	10	--	Seal L Light Brown			CVP-303C	(WD15820)		
	11	--	Cushion	180X100X10T			(WC28400)		
	13	--	Tape	#4430 150X9			(WD47900)		

*: New Parts

RANK: Japan only

■ ARM ASSEMBLY R

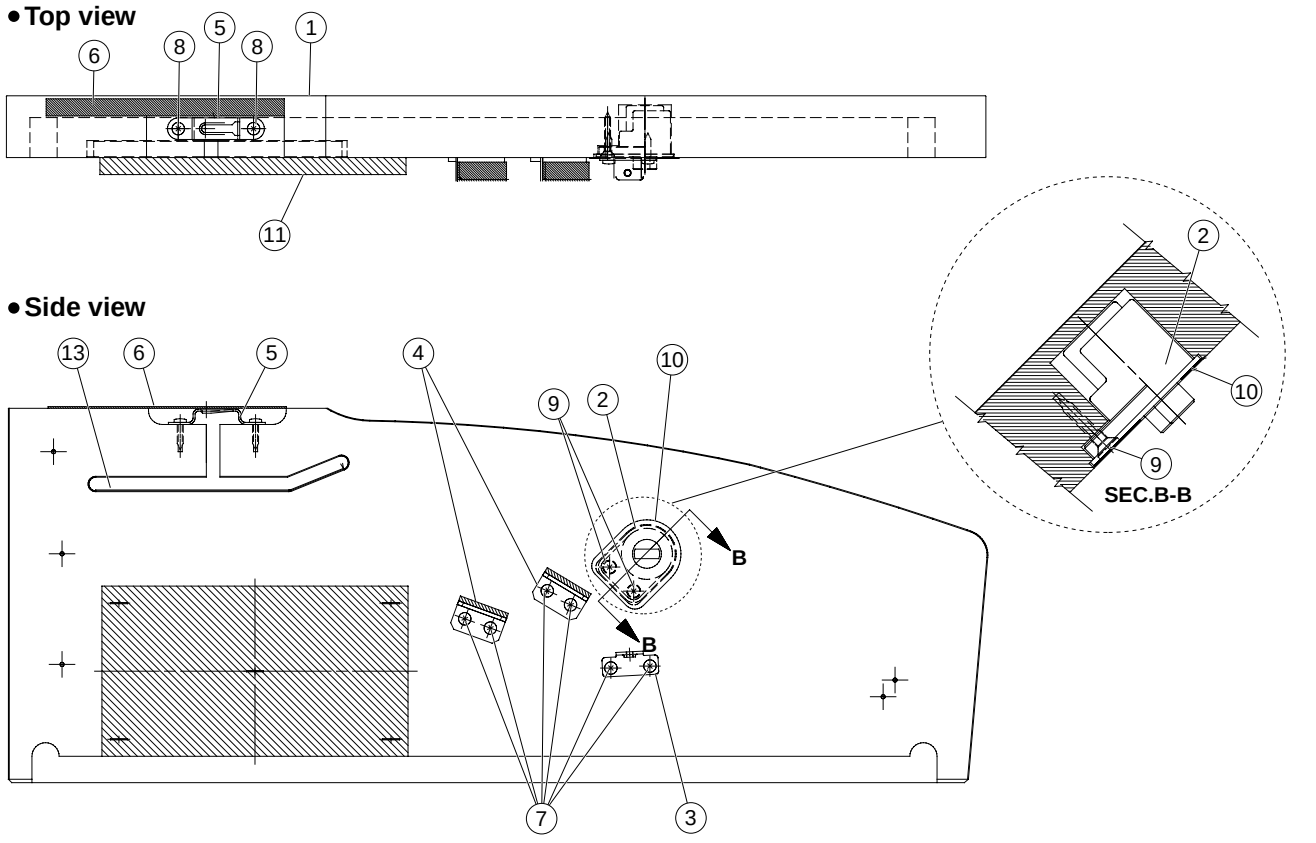

	REF NO.	PART NO.	DESCRIPTION			REMARKS		QTY	RANK
			ARM ASSEMBLY R	RIGHT		CVP-303/CVP-303M/CVP-303C			
*		**WC282500**	Arm Assembly R	RIGHT		CVP-303			
*		**WC282700**	Arm Assembly R	RIGHT		CVP-303M			
*		**WC282900**	Arm Assembly R	RIGHT		CVP-303C			
	1	--	Side Cover R	RIGHT		CVP-303	(WC09620)		
	1	--	Side Cover R	RIGHT		CVP-303M	(WC12500)		
	1	--	Side Cover R	RIGHT		CVP-303C	(WC12760)		
	2	--	Rotary Damper	TD36A3-17K(TH)-01			(WC12340)		
	3	--	KBL Angle				(WC08550)		
	4	--	Stopper Angle Assembly				(WC13660)	2	
	5	**WA218300**	Holder, Top Board	1.20					01
	6	--	Felt	140X10X1			(WC16130)		
	7	**EP030190**	Bind Head Tapping Screw-1	3.5X16 MFZN2Y				6	01
	8	**EP030260**	Bind Head Tapping Screw-1	3.5X16 MFZN2BL				2	01
*	9	**03739140**	Flat Head Tapping Screw-1	3.5X20 MFZN2Y				2	
	10	--	Seal H Dark Brown			CVP-303/CVP-303M	(WC18340)		
	10	--	Seal H Light Brown			CVP-303C	(WC18380)		
	11	--	Cushion	180X100X10T			(WC28400)		
	13	--	Tape	#4430 150X9			(WD47900)		

*: New Parts

RANK: Japan only

FRONT RAIL ASSEMBLY

● **Bottom view**

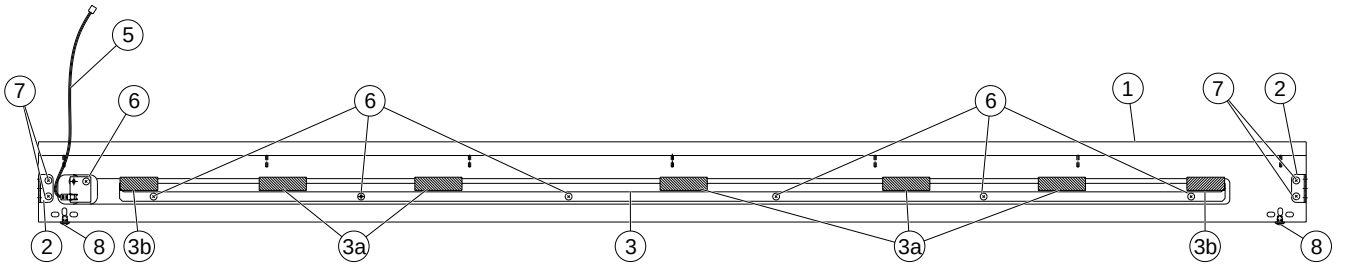

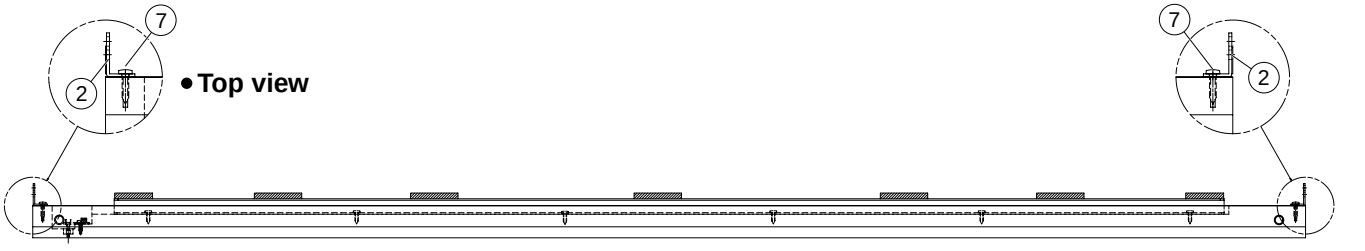

● **Top view**

● **Side view**

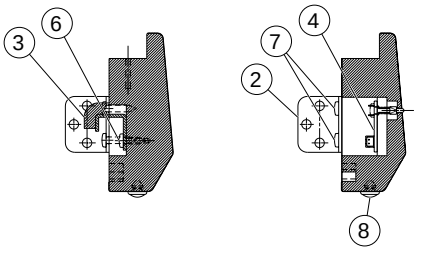

	REF NO.	PART NO.	DESCRIPTION			REMARKS	QTY	RANK
			FRONT RAIL ASSEMBLY			CVP-303/CVP-303M/CVP-303C		
		--	Front Rail Assembly			CVP-303 (WC16260)		
		--	Front Rail Assembly			CVP-303M (WC16410)		
		--	Front Rail Assembly			CVP-303C (WC16590)		
*	1	**WC096600**	Front Rail			CVP-303		
*	1	**WC125700**	Front Rail			CVP-303M		
*	1	**WC128100**	Front Rail			CVP-303C		
	2	**V5263500**	Holder, Rail	1.6 L			2	
	3	--	Holder Assembly, Keyboard			(V760310)		
	3a	**V4021000**	Cushion L	T6X50X18			5	
	3b	**V4021100**	Cushion S	T6X40X18			2	
	4	**VU659100**	Circuit Board	PL				03
	5	**VK105200**	Connector Assembly	KRD-KRD 2P-300				03
	6	**EP030340**	Bind Head Tapping Screw-1	3.5X12 MFZN2BL			7	01
	7	**EP030260**	Bind Head Tapping Screw-1	3.5X16 MFZN2BL			4	01
*	8	**WC213800**	Stopper Black			CVP-303/CVP-303M	2	
*	8	**WC213700**	Stopper Brown			CVP-303C	2	

*: New Parts

RANK: Japan only

KEYBED ASSEMBLY

● **Top view**

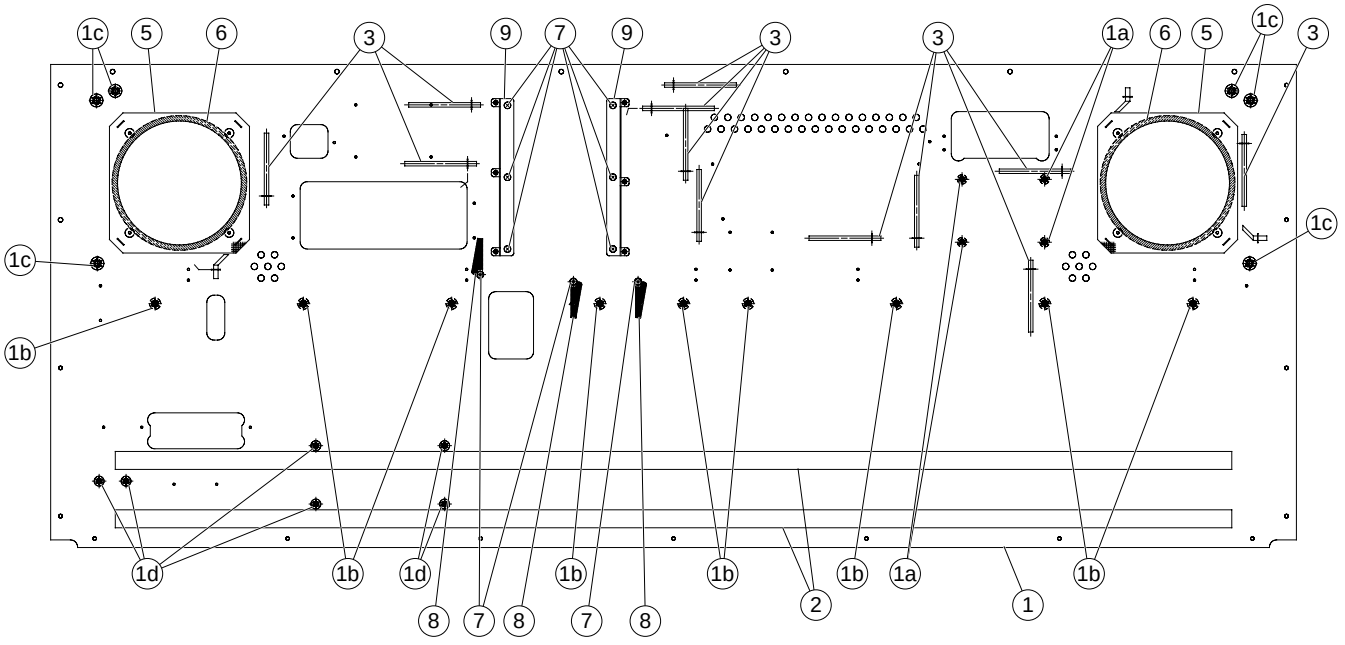

REF NO.	PART NO.	DESCRIPTION			REMARKS	QTY	RANK
		KEYBED ASSEMBLY			CVP-303/CVP-303M/CVP-303C		
	--	Keybed Assembly			CVC-303/CVP-303M(WC16700)		
	--	Keybed Assembly			CVC-303C (WC16850)		
1	--	Keybed			CVC-303/CVP-303M(WC10480)		
1	--	Keybed Assembly			CVC-303C (WC13030)		
1a	**VA789400**	Nut	4X11.5 B MFZN2BL			4	01
1b	**VA127400**	Nut	5.0X12 B MFZN2BL			9	01
1c	**V6008700**	Nut	6X12.5 B MFZN2BL			6	01
1d	**V9001100**	Nut	4X12.5 TYPE I			6	01
2	**VZ750500**	Cushion Black	GH			2	06
3	**VU891300**	Cord Holder	L80			15	03
5	**VF823100**	Metal Net				2	03
6	--	Cushion	480X6X2T		(VT47930)	2	
6	--	Cushion	PE 450X6XT2		(V005320)	2	
7	**EP030240**	Bind Head Tapping Screw-1	3.5X12 MFZN2Y			9	01
8	**CB817510**	Cord Binder	S-14B			3	03
9	--	Holder, DM			(WC07770)	2	

✻: New Parts

RANK: Japan only

END BLOCK ASSEMBLY L

● **Top view**

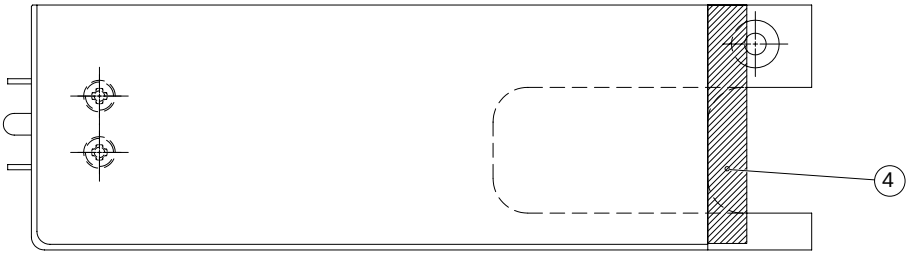

● **Bottom view**

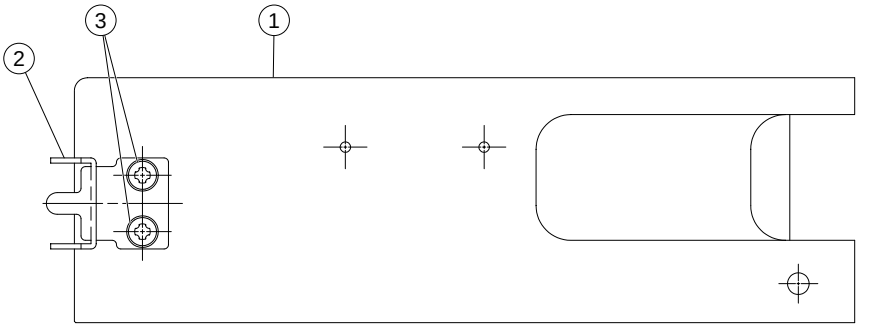

	REF NO.	PART NO.	DESCRIPTION			REMARKS		QTY	RANK
			END BLOCK ASSEMBLY L	LEFT		CVP-303/CVP-303M/CVP-303C			
*		**WC133100**	End Block Assembly L	LEFT		CVC-303			
*		**WC135000**	End Block Assembly L	LEFT		CVP-303M			
*		**WC136000**	End Block Assembly L	LEFT		CVC-303C			
	1	--	End Block L	LEFT		CVC-303	(WC09360)		
	1	--	End Block L	LEFT		CVP-303M	(WC11680)		
	1	--	End Block L	LEFT		CVC-303C	(WC11690)		
	2	**V5335500**	Angle H	1.2 L					03
	3	**EP030190**	Bind Head Tapping Screw-1	3.5X16 MFZN2Y				2	01
	4	--	Felt	55X9X2			(WD45000)		

*: New Parts

RANK: Japan only

■ END BLOCK ASSEMBLY R

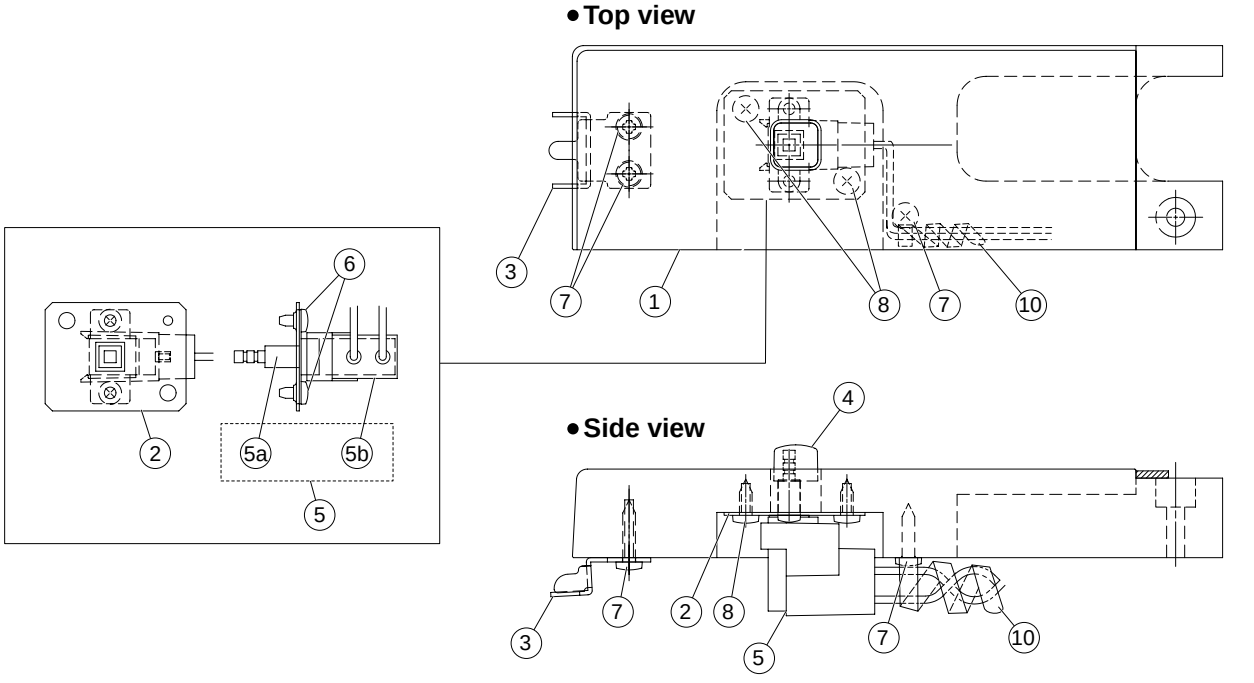

	REF NO.	PART NO.	DESCRIPTION			REMARKS	QTY	RANK
			END BLOCK ASSEMBLY R	RIGHT		CVP-303/CVP-303M/CVP-303C		
		--	End Block Assembly R	RIGHT		CVP-303 (WC54990)		
		--	End Block Assembly R	RIGHT		CVP-303M (WC55000)		
		--	End Block Assembly R	RIGHT		CVP-303C (WC55010)		
*	1	**WC094000**	End Block R	RIGHT		CVP-303		
*	1	**WC117000**	End Block R	RIGHT		CVP-303M		
*	1	**WC117100**	End Block R	RIGHT		CVP-303C		
	2	--	Angle, Power Switch	0.8		(V522000)		
	3	**V5335500**	Angle H	1.2 L				03
	4	**VF663400**	Push Knob Black			CVP-303/CVP-303M POWER		02
	4	**V6250700**	Push Knob Brown			CVP-303C POWER		01
*	5	**WC044500**	Power Switch Assembly	PSW 3P-800				
⚠	5a	**VC843500**	Push Switch	SDDLB1216A J.U.C.S		POWER		03
	5b	**V5800800**	Switch Cover					01
	6	**EP600230**	Bind Head Tapping Screw-B	3.0X6 MFZN2BL			2	01
	7	**EP030190**	Bind Head Tapping Screw-1	3.5X16 MFZN2Y			3	01
	8	**EP030320**	Bind Head Tapping Screw-1	3.5X10 MFZN2BL			2	01
	10	**CB817510**	Cord Binder	S-14B				03

*: New Parts

RANK: Japan only

KEYBOARD ASSEMBLY

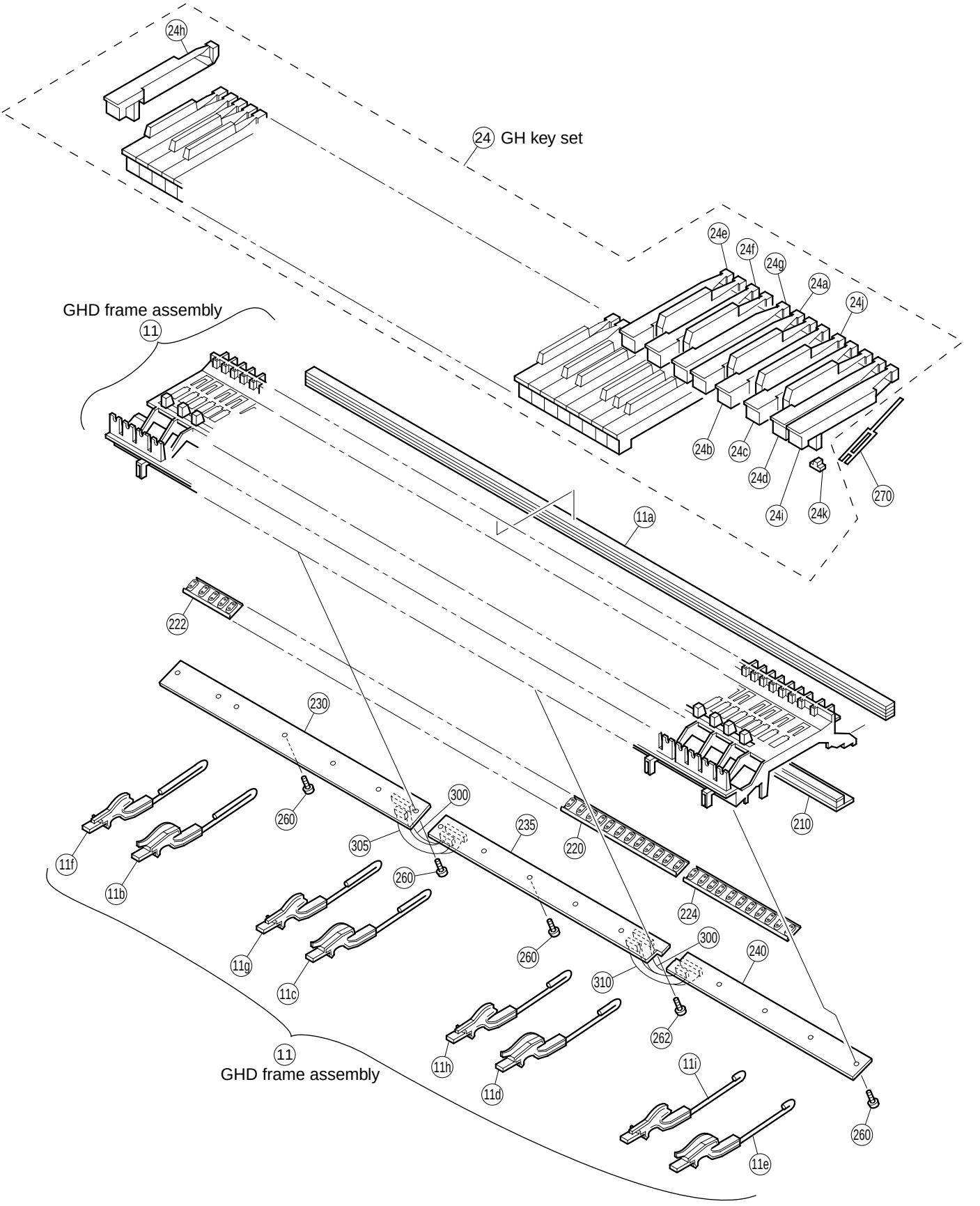

REF NO.	PART NO.	DESCRIPTION			REMARKS	QTY	RANK
		KEYBOARD ASSEMBLY	GHD_EBUS A88 K6		CVP-303/CVP-303M/CVP-303C		
	V8278500	Keyboard Assembly	GHD_EBUS A88 K6				51
11	**--**	Frame	A88		(WC96120)		
11a	**VU342100**	Stopper Felt	1229X12X14.8T U88				09
11b	**VY828500**	Hammer Assembly, White Key	W1 A-1-F1			13	05
11c	**VY828600**	Hammer Assembly, White Key	W2 G1-E3			13	05
11d	**VY828700**	Hammer Assembly, White Key	W3 F3-D5			13	05
11e	**VY828800**	Hammer Assembly, White Key	W4 E5-C7			13	05
11f	**VY828900**	Hammer Assembly, Black Key	B1 A#-1-F#1			9	05
11g	**VY829000**	Hammer Assembly, Black Key	B2 G#1-D#3			9	05
11h	**VY829100**	Hammer Assembly, Black Key	B3 F#3-C#5			9	05
11i	**VY829200**	Hammer Assembly, Black Key	B4 D#5-A#6			9	05
24	**--**	GH Key Set			(WC96140)		
24a	**VU101301**	White Key	F			7	05
24b	**VU101401**	White Key	G			7	05
24c	**VU101501**	White Key	A			7	05
24d	**VU101601**	White Key	B			8	05
24e	**VU101001**	White Key	C			7	05
24f	**VU101101**	White Key	D			7	05
24g	**VU101201**	White Key	E			7	05
24h	**VU101701**	White Key	A'				05
24i	**VU101801**	White Key	C'				05
24j	**VU102101**	Black Key				36	05
24k	**V2211300**	Rubber	2			88	03
24l	**--**	Grease	G-1006Y		(V627430)		
210	**V7640100**	Stopper Felt	1239.5X28X10.1T				07
220	**VY846700**	Rubber Contact	OCTAVE 12KEYS		D0-C#1, D1-C#2, D2-C#3, D3-C#4, D4-C#5, D5-C#6	6	08
222	**VY846800**	Rubber Contact	OCTAVE 5KEYS		A-1-C#0		08
224	**VY846900**	Rubber Contact	OCTAVE 11KEYS		D6-C7		08
230	**V8514800**	Circuit Board	GHD EBUS L				13
235	**V8521400**	Circuit Board	GHD M				08
240	**V8521500**	Circuit Board	GHD H				08
260	**EP600270**	Bind Head Tapping Screw-P	3.0X10 MFZN2Y			16	01
260	**VT413400**	Bind Head Tapping Screw-P	3.0X10 MFZN2			16	01
262	**V8833200**	PW Head Tapping Screw-P	3X10-10 ZMC2Y				01
270	**V2798500**	Spring	R WHITE/BLACK			88	
291	**--**	Grease	G-1006Y		(V627430)		
296	**--**	Grease	PG-661		(2341590)		
300	**--**	Cable	12P L=106 P=2		(V852050)		2
305	**V7766800**	Cable	9P L=106 P=2				01
310	**--**	Cable	4P L=106 P=2		(V852100)		
		TOOL					
	TX000670	Rod					99

✻: New Parts

RANK: Japan only

JACK ASSEMBLY

● Front view

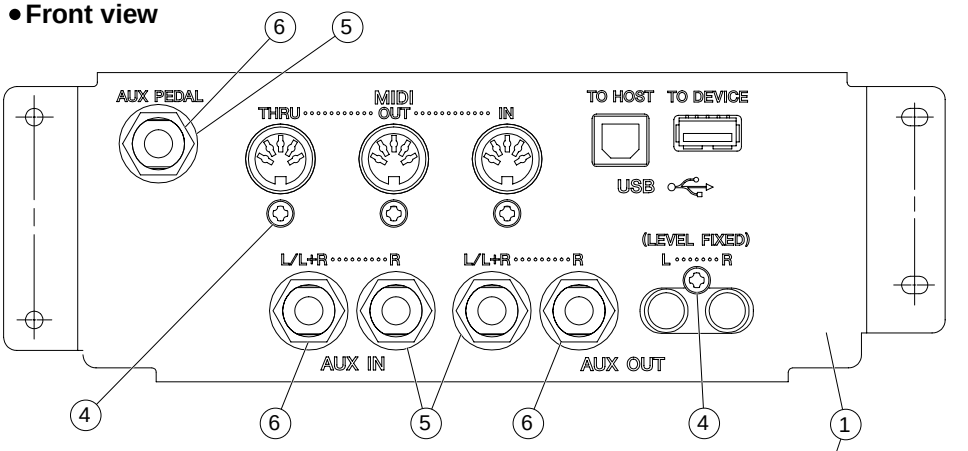

● Top view

● Side view

REF NO.	PART NO.	DESCRIPTION			REMARKS	QTY	RANK
		JACK ASSEMBLY			CVP-303/CVP-303M/CVP-303C		
	--	Jack Assembly			(WC18790)		
* 1	**WC026500**	Angle, Jack					
* 2	**WB935600**	Circuit Board	AJACK				
* 3	**WB922200**	Circuit Board	DJACK				
4	**EP600190**	Bind Head Tapping Screw-B	3.0X8 MFZN2BL			4	01
5	**VJ869400**	Washer Black				5	02
6	**VB508600**	Hexagonal Nut	12.0X14X2 MFZN2BL			5	01
7	**EP600250**	Bind Head Tapping Screw-B	3.0X8 MFZN2Y			4	01

*: New Parts

RANK: Japan only

MIC. & PHONES UNIT

• **Bottom view**

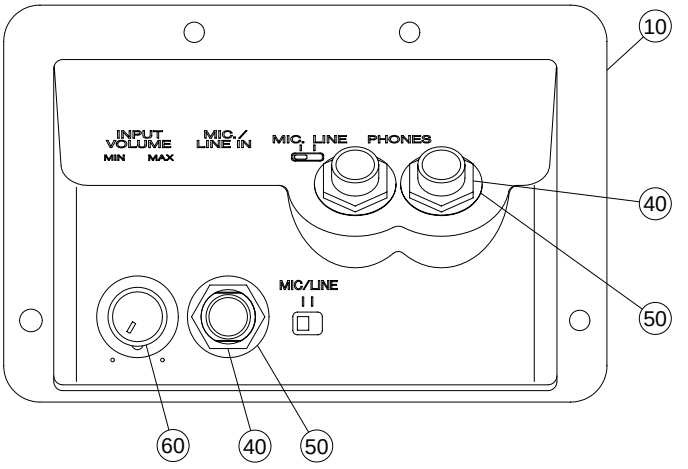

• **Side view**

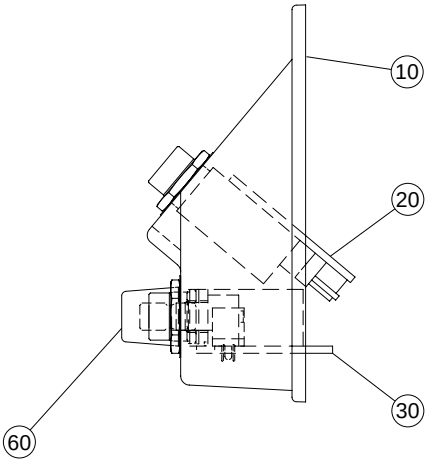

	REF NO.	PART NO.	DESCRIPTION			REMARKS	QTY	RANK
			MIC. & PHONES UNIT			CVP-303/CVP-303M/CVP-303C		
		--	Mic. & Phones Unit			(WC14850)		
	10	**V8036100**	Cover, Mic. & Phones					05
*	20	**WC016600**	Circuit Board	HP				
*	30	**WD052300**	Circuit Board	MIC				
	40	**VB508600**	Hexagonal Nut	12.0X14X2 MFZN2BL			3	01
	50	**VJ869400**	Washer Black				3	02
	60	**CB028970**	Knob Black			INPUT VOLUME		03

✻: New Parts

RANK: Japan only

SIDE BOARD ASSEMBLY (L, R)

• Top view

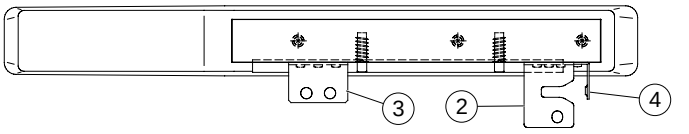

• Side view

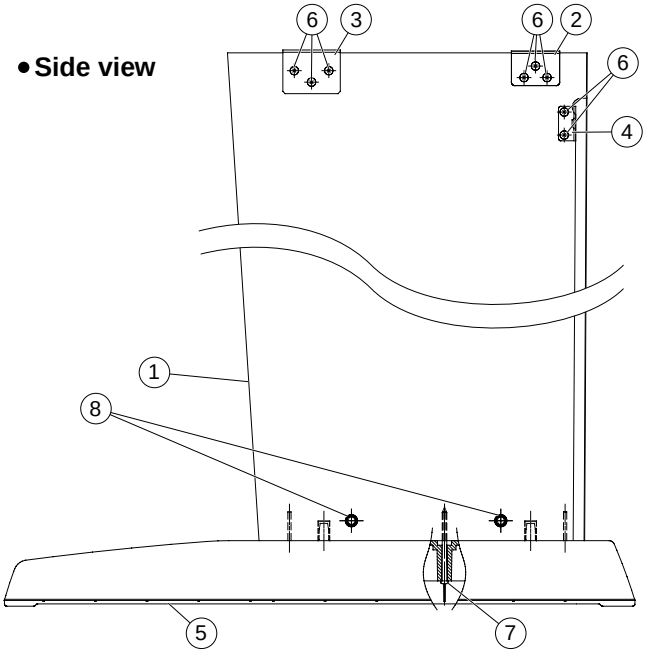

• SIDE BOARD ASSEMBLY L

	REF NO.	PART NO.	DESCRIPTION			REMARKS		QTY	RANK
			SIDE BOARD ASSEMBLY L	LEFT		CVP-303/CVP-303M/CVP-303C			
*		**WC166600**	Side Board Assembly L	LEFT		CVP-303			
*		**WC167100**	Side Board Assembly L	LEFT		CVP-303M			
*		**WC167900**	Side Board Assembly L	LEFT		CVP-303C			
	1	**--**	Side Board L	LEFT		CVP-303	(WC10350)		
	1	**--**	Side Board L	LEFT		CVP-303M	(WC12930)		
	1	**--**	Side Board L	LEFT		CVP-303C	(WC12980)		
	2	**VS295500**	Holder, Stand L	LEFT					05
	3	**VZ885300**	Angle Bracket	2.0 L MFZN2					04
	4	**VQ958300**	Holder, Back Board						05
	5	**V7145900**	Stand Base L	LEFT		CVP-303/CVP-303M			08
	5	**WA564200**	Stand Base	LEFT		CVP-303C			07
	6	**EP030580**	Bind Head Tapping Screw-1	3.5X20 MFZN2BL				8	01
	7	**VV444000**	Pan Head Tapping Screw-1	4.0X65 MFZN2Y				3	01
	8	**V5251600**	Nut	6.0X33 TYPE M				2	01

*: New Parts

RANK: Japan only

• SIDE BOARD ASSEMBLY R

	REF NO.	PART NO.	DESCRIPTION			REMARKS		QTY	RANK
			SIDE BOARD ASSEMBLY R	RIGHT		CVP-303/CVP-303M/CVP-303C			
*		**WC166700**	Side Board Assembly R	RIGHT		CVP-303			
*		**WC167200**	Side Board Assembly R	RIGHT		CVP-303M			
*		**WC168000**	Side Board Assembly R	RIGHT		CVP-303C			
	1	**--**	Side Board R	RIGHT		CVP-303	(WC10360)		
	1	**--**	Side Board R	RIGHT		CVP-303M	(WC12940)		
	1	**--**	Side Board R	RIGHT		CVP-303C	(WC12990)		
	2	**VS295600**	Holder, Stand R	RIGHT					05
	3	**VZ885300**	Angle Bracket	2.0 L MFZN2					04
	4	**VQ958300**	Holder, Back Board						05
	5	**V7146000**	Stand Base R	RIGHT		CVP-303/CVP-303M			08
	5	**WA598200**	Stand Base R	RIGHT		CVP-303C			07
	6	**EP030580**	Bind Head Tapping Screw-1	3.5X20 MFZN2BL				8	01
	7	**VV444000**	Pan Head Tapping Screw-1	4.0X65 MFZN2Y				3	01
	8	**V5251600**	Nut	6.0X33 TYPE M				2	01

*: New Parts

RANK: Japan only

KEY COVER & PANEL ASSEMBLY

• Bottom view

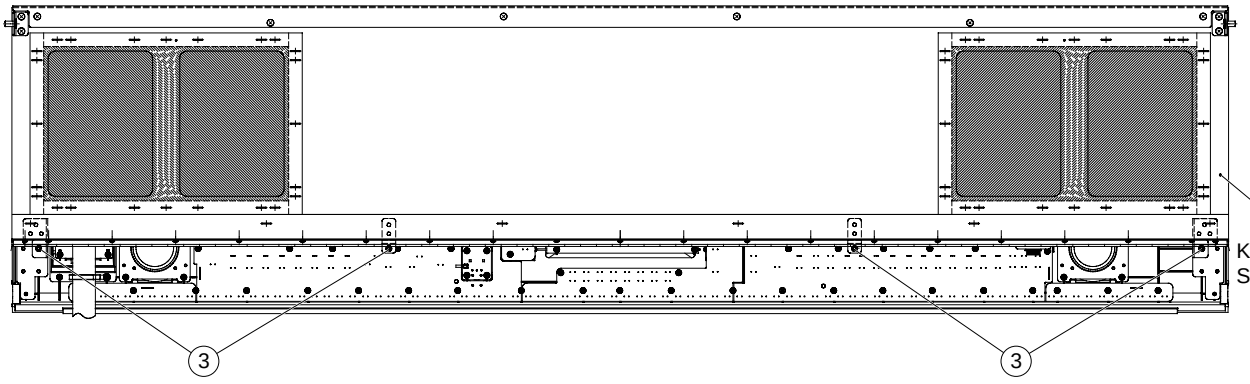

Key cover assembly:
See page 24.

• Side view

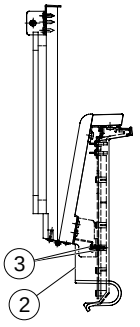

Panel assembly:
See page 26.

	REF NO.	PART NO.	DESCRIPTION			REMARKS	QTY	RANK
			KEY COVER & PANEL ASSEMBLY			CVP-303/CVP-303M/CVP-303C		
		--	Key Cover & Panel Assembly			CVP-303 (WC16760)		
		--	Key Cover & Panel Assembly			CVP-303M (WC17370)		
		--	Key Cover & Panel Assembly			CVP-303C (WC16870)		
*	1	**WC179500**	Key Cover Assembly			CVP-303		
*	1	**WC179600**	Key Cover Assembly			CVP-303M		
*	1	**WC179700**	Key Cover Assembly			CVP-303C		
	2	--	Panel Assembly			CVP-303/CVP-303M (WC04810)		
	2	--	Panel Assembly			CVP-303C (WC04800)		
	3	**EP600220**	Bind Head Tapping Screw-B	3.0X10 MFZN2Y			8	01

*: New Parts

RANK: Japan only

KEY COVER ASSEMBLY

● **Rear view**

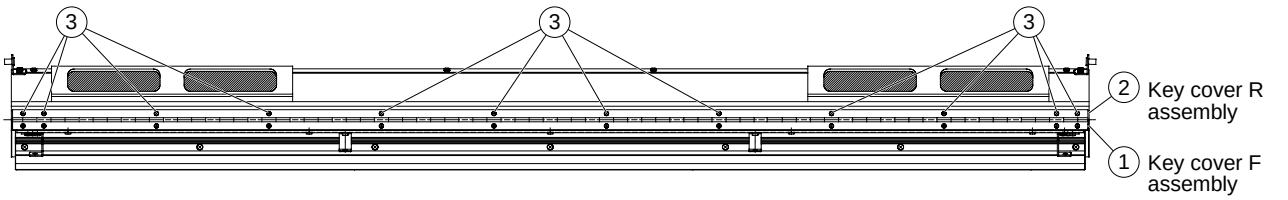

● **Bottom view**

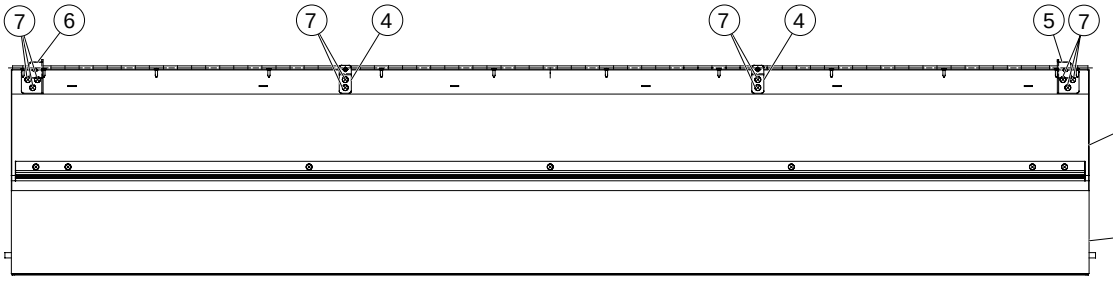

● **Side view**

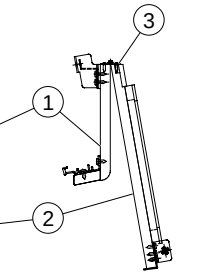

Key Cover F Assembly (FRONT)

● **Rear view**

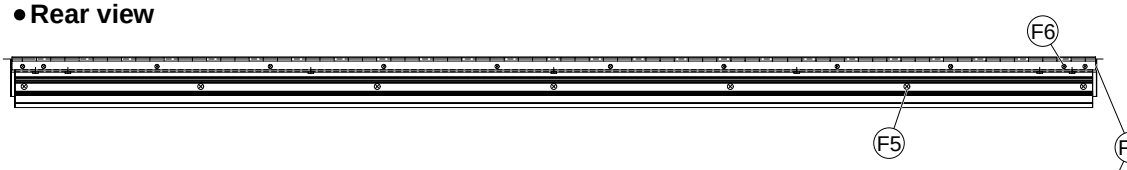

● **Side view**

● **Bottom view**

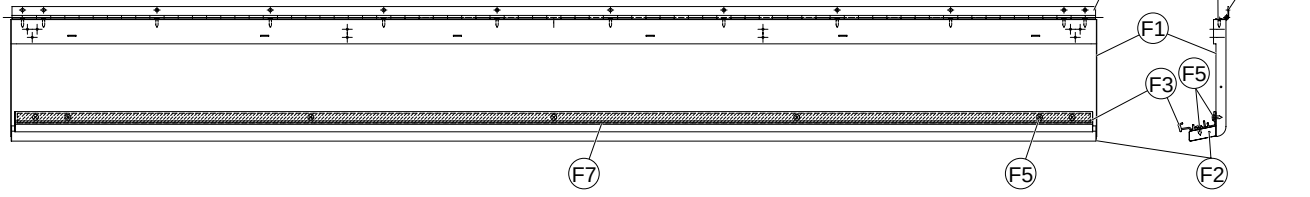

Key Cover R Assembly (REAR)

● **Bottom view**

● **Side view**

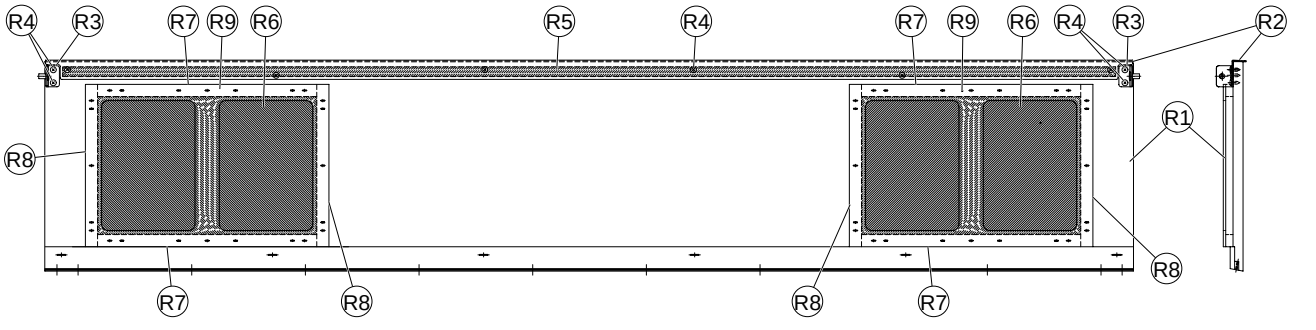

	REF NO.	PART NO.	DESCRIPTION			REMARKS		QTY	RANK
			KEY COVER ASSEMBLY			CVP-303/CVP-303M/CVP-303C			
*		**WC179500**	Key Cover Assembly			CVP-303			
*		**WC179600**	Key Cover Assembly			CVP-303M			
*		**WC179700**	Key Cover Assembly			CVP-303C			
	1	--	Key Cover F Assembly	FRONT		CVP-303	(WC13760)		
	1	--	Key Cover F Assembly	FRONT		CVP-303M	(WC13770)		
	1	--	Key Cover F Assembly	FRONT		CVP-303C	(WC13780)		
	2	--	Key Cover R Assembly	REAR		CVP-303	(WC34410)		
	2	--	Key Cover R Assembly	REAR		CVP-303M	(WC34420)		
	2	--	Key Cover R Assembly	REAR		CVP-303C	(WC34430)		
*	3	**WC628200**	Truss Head Screw	2.8X10 MFZN2Y				12	
	4	--	Panel Holder B				(WC08360)	2	
	5	--	Panel Holder A (L)	LEFT			(WC19160)		
	6	--	Panel Holder A (R)	RIGHT			(WC19170)		
	7	**EP030240**	Bind Head Tapping Screw-1	3.5X12 MFZN2Y				10	01
		--	Key Cover F Assembly	FRONT		CVP-303	(WC13760)		
		--	Key Cover F Assembly	FRONT		CVP-303M	(WC13770)		
		--	Key Cover F Assembly	FRONT		CVP-303C	(WC13780)		
	F1	--	Key Cover F	FRONT		CVP-303	(WC09180)		
	F1	--	Key Cover F	FRONT		CVP-303M	(WC11540)		
	F1	--	Key Cover F	FRONT		CVP-303C	(WC11570)		
*	F2	**WC090700**	Front Rail, Key Cover			CVP-303			
*	F2	**WC115200**	Front Rail, Key Cover			CVP-303M			
*	F2	**WC115300**	Front Rail, Key Cover			CVP-303C			
*	F3	**WC086000**	Sash F	FRONT					
*	F4	**WC086600**	Hinge						
	F5	**EP030230**	Bind Head Tapping Screw-1	3.5X10 MFZN2Y				14	01
*	F6	**WC628200**	Truss Head Screw	2.8X10 MFZN2Y				12	
	F7	--	Adhesive Tape	#500 W=12			(VE36310)		
		--	Key Cover R Assembly	REAR		CVP-303	(WC34410)		
		--	Key Cover R Assembly	REAR		CVP-303M	(WC34420)		
		--	Key Cover R Assembly	REAR		CVP-303C	(WC34430)		
	R1	--	Key Cover R	REAR		CVP-303	(WC09750)		
	R1	--	Key Cover R	REAR		CVP-303M	(WC12620)		
	R1	--	Key Cover R	REAR		CVP-303C	(WC12910)		
	R2	--	Sash R	REAR			(WC08390)		
	R3	--	Guide Pin				(WC08440)	2	
	R4	**EP030230**	Bind Head Tapping Screw-1	3.5X10 MFZN2Y				10	01
	R5	--	Adhesive Tape	#500 W=12			(VE36310)		
	R6	--	Cushion	INOAC F-6 KF			(WC34550)	2	
	R7	--	Crosspiece				(WC34560)	4	
	R8	--	Crosspiece				(WC34570)	4	
	R9	--	Bracket				(WC34600)	2	

*: New Parts

RANK: Japan only

PANEL ASSEMBLY

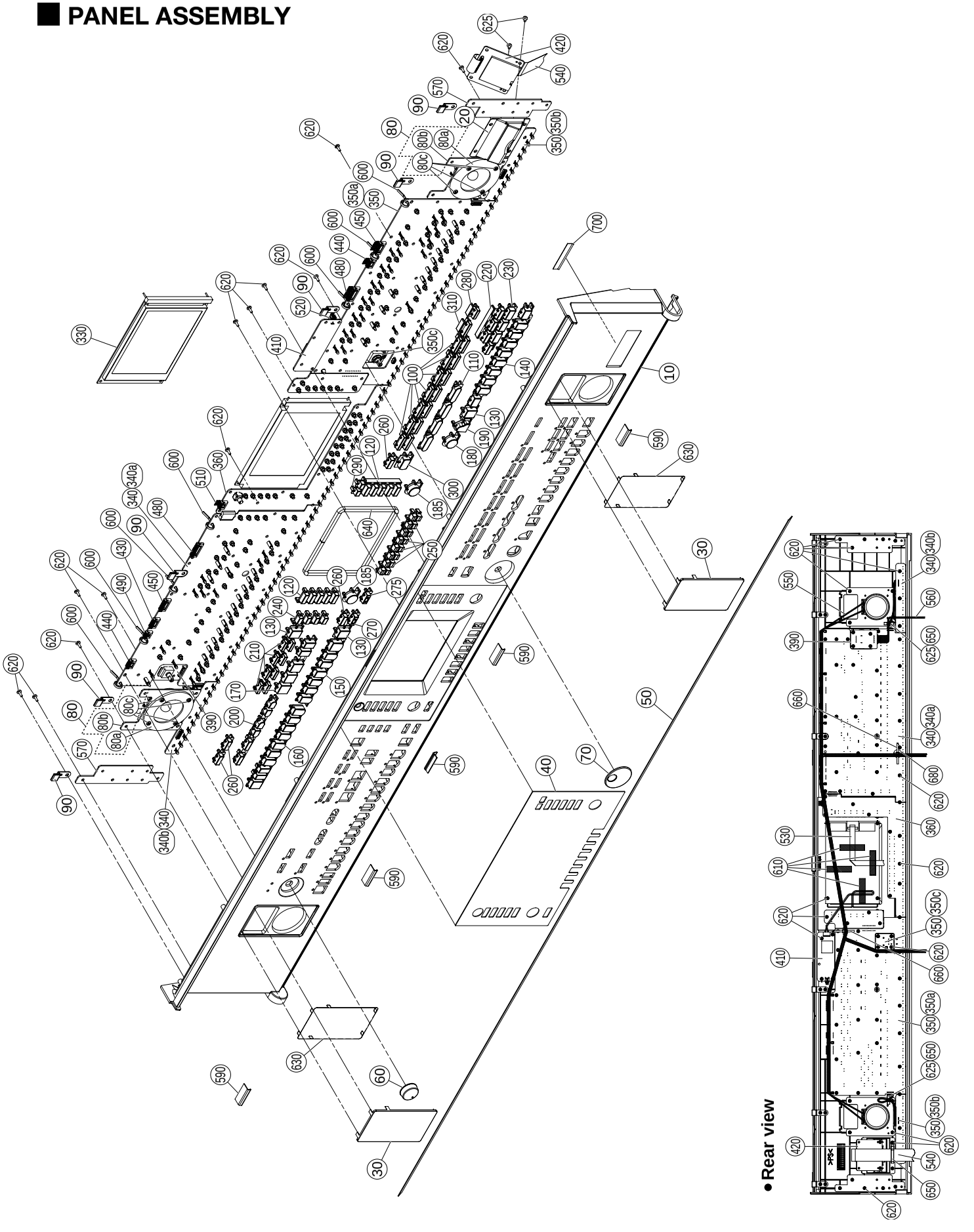

	REF NO.	PART NO.	DESCRIPTION			REMARKS	QTY	RANK
			PANLE ASSEMBLY			CVP-303/CVP-303M/CVP-303C		
		--	Panel Assembly			CVP-303/CVP-303M(WC04810)		
		--	Panel Assembly			CVP-303C (WC04800)		
*	10	WB994800	Control Panel			CVP-303/CVP-303M		
*	10	WB994900	Control Panel			CVP-303C		
*	20	WC004500	Escutcheon, Smart Media			CVP-303/CVP-303M CARD		
*	20	WC004700	Escutcheon, Smart Media			CVP-303C CARD		
*	30	WC047100	Speaker Grille Black			CVP-303/CVP-303M	2	
*	30	WC047200	Speaker Grille Black			CVP-303C	2	
*	40	WC006000	LCD Cover			CVP-303/CVP-303M		
*	40	WC006100	LCD Cover			CVP-303C		
*	50	WC009700	GL Cover					
	60	VU432400	Knob			MASTER VOLUME		01
	70	VQ664100	Encoder Knob			DATA ENTRY		02
	80	--	Speaker Assembly			(WC06800)	2	
*	80a	X5146A00	Speaker	5.0cm 16 ohm 60W		MONITOR	2	
	80b	--	Speaker Holder			(WC06760)	2	
	80c	EP600190	Bind Head Tapping Screw-B	3.0X8 MFZN2BL			8	01
	90	--	CP Holder Assembly			(WC04900)	6	
*	100	WB958100	Button Black	A x2		VOICE(PIANO - ORGAN, TRUMPET - USER)	7	
*	110	WB960500	Button Black	B x4		ONE TOUCH SETTING(1-4)		
*	120	WB960400	Button Dark Gray	Y x5		A-J button	2	
*	130	WB958400	Button Gray	D x1		SONG(SONG SELECT),STYLE (STYLE SELECT),REGISTRATION MEMORY(REGIST.BANK)	3	
*	140	WB960600	Button Black/Red	E x10		REGISTRATION MEMORY (FREEZE - MEMORY)		
*	150	WB960700	Button Black/Green	F x7		STYLE(ENDING/rit.1-3 - START/STOP)		
*	160	WB960800	Button Black	G x10		STYLE(ACMP ON/OFF - BREAK)		
*	170	WB960900	Button Red/Black/Green	H x5		SONG(REC - FF)		
*	180	WB958900	Button Black	J x1		ENTER		
*	185	WC304200	Button Dark Gray	J2 x1		DIRECT ACCESS,EXIT	2	
*	190	WB959000	Button Black	K x1		PIANO SETTING(PIANO)		
*	200	WB961000	Button Black	L x6		VOLUME(FADE IN/OUT) - TRANSPORT(RESET,+)		
*	210	WB959200	Button Black	M x2		SONG(GUIDE - TRACK1)	4	
*	220	WB959300	Button Black	N x3		PART SELECT (LEFT - RIGHT2)		
*	230	WB959400	Button Black	O x4		LEFT HOLD,PART ON/OFF (LEFT - RIGHT2)		
*	240	WB959500	Button Black	P x4		HELP,FUNCTION,SOUND CREATOR,DIGITAL RECORDING		
*	250	WC306600	Button Dark Gray	Z x4		UP,DOWN 1-8 button	4	
*	260	WB959700	Button Black	R x1		MIC.(MIC SETTING/VOCAL HARMONY),METRONOME(ON/OFF),BALANCE,DEMO	4	
*	270	WB961200	Button Black	R x1		MIXING CONSOLE		
*	275	WC304900	Button Dark Gray	R2 x1		CHANNEL ON/OFF		
*	280	WB959800	Button Black	S x1		VOICE(VOICE EFFECT)		
*	290	WB961300	Button Dark Gray	T x2		TAB(L,R)		
*	300	WB960000	Button Black	U x1		MUSIC FINDER		
*	310	WB960100	Button Black	V x1		VOICE(ORGAN FLUTES)		
	330	WB912200	LCD	VG-S322453-1BTFWA				
*	340	WD159000	Circuit Board	PNL(PNL1,PNL2)				
	340a	--	Circuit Board	PNL1		(WD15900)(WD15910)		
	340b	--	Circuit Board	PNL2		(WD15900)(WD15920)		
*	350	WB942700	Circuit Board	PNR(ENC,PNR1,PNR2)				
	350a	--	Circuit Board	PNR1		(WB94270)(WB94280)		
	350b	--	Circuit Board	PNR2		(WB94270)(WB94290)		
	350c	--	Circuit Board	ENC		(WB94270)(WB94330)		
*	360	WB943600	Circuit Board	PNC				
*	390	WB943700	Circuit Board	MV2				
*	410	WB943900	Circuit Board	INV				
	420	WB704100	Circuit Board	SM				
	430	--	Connector Assembly	PH7P 7P-950		(WD22640)		
	440	--	Connector Assembly	KRD-KRD 6P-800		(VK12110)		
	450	VK120000	Connector Assembly	KRD-KRD 9P-750			05	

*: New Parts

RANK: Japan only

	REF NO.	PART NO.	DESCRIPTION			REMARKS	QTY	RANK
	480	**VK114100**	Connector Assembly	KRD-KRD 11P-550				
	490	**--**	Connector Assembly	PN5D PH 4P-270		(WC36720)		
	510	**--**	Connector Assembly	PH4P 4P-750		(WD22650)		
	520	**--**	Connector Assembly	INV PH 3P-1000		(WC20300)		
*	530	**WD194800**	Cable	14P 520mm P=1.0		}		
*	530	**WD215400**	Cable	14P 520mm P=1.0		}		
*	540	**WC193700**	Cable	24P 1200mm P=1.0		}		
*	540	**WD214800**	Cable	24P 1200mm P=1.0		}		
	550	**--**	Connector Assembly	TW XH 5P-1050/1450		(WC20370)		
	560	**--**	Connector Assembly	VOL PH 8P		(WC20330)		
	570	**--**	Panel Support Plate			(WC19180)	2	
	590	**--**	Cushion	30X16XT1		(WC06910)	5	
	600	**CB069250**	Cord Holder	BK-1			9	01
	610	**VP834600**	Adhesive Tape	12X50m				02
	620	**EP600250**	Bind Head Tapping Screw-B	3.0X8 MFZN2Y			116	01
	625	**EP600230**	Bind Head Tapping Screw-B	3.0X6 MFZN2BL			4	01
	630	**--**	Nonwoven Fabric Cloth			(WC06700)	2	
	640	**--**	Vibration-proof Sheet	CALMFLEX F-2		(WC25180)		
	650	**CB817510**	Cord Binder	S-14B			4	03
	660	**--**	Clamp	4.0		(WC56710)	2	
*	680	**WD507200**	Washer Black					
	700	**--**	Nonwoven Fabric Cloth	10X50X0.55		(V243310)		

*: New Parts

RANK: Japan only

MA80S ASSEMBLY

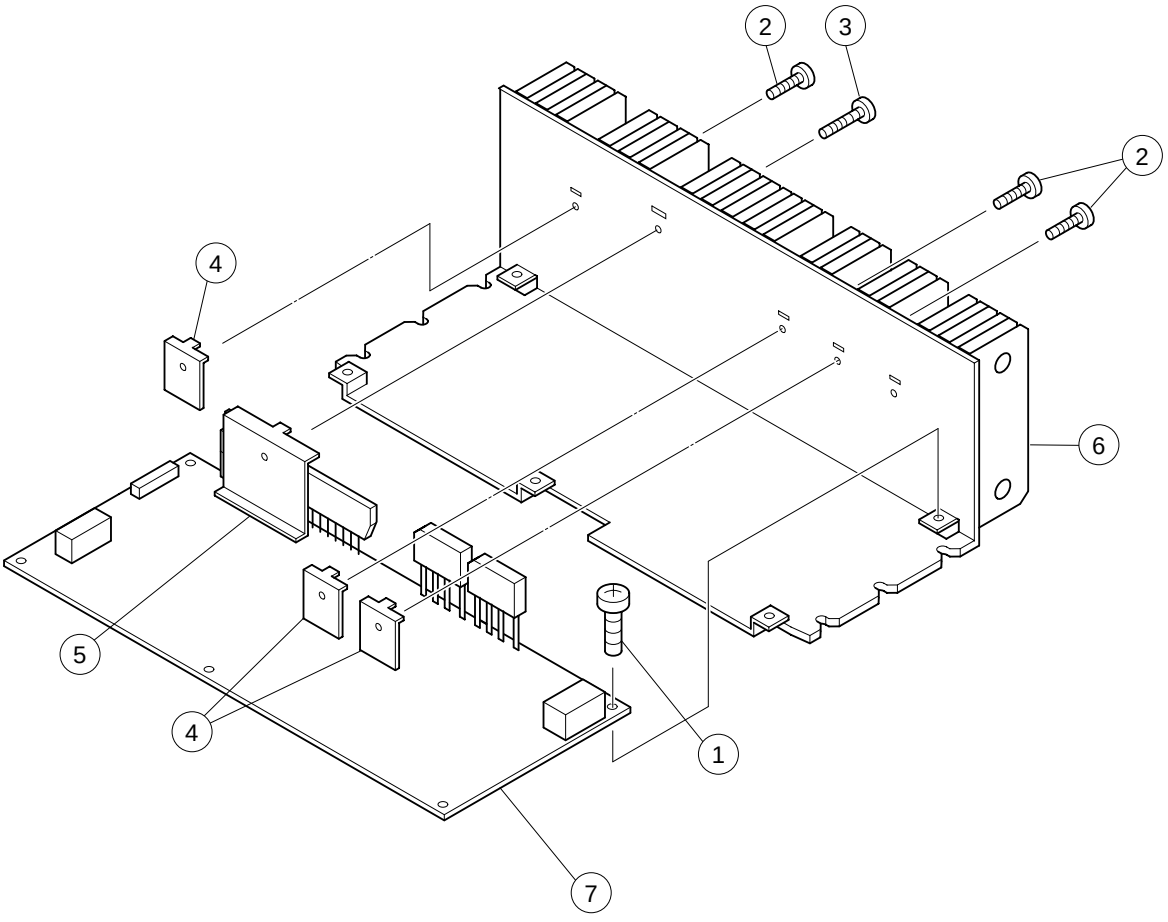

	REF NO.	PART NO.	DESCRIPTION			REMARKS	QTY	RANK
			MA80S ASSEMBLY			CVP-303/CVP-303M/CVP-303C		
*		**WC028900**	MA80S Assembly			U		
*		**WC029000**	MA80S Assembly			E,N,B,K		
	1	**EP640410**	Bind Head Tapping Screw-B	4.0X8 MFZN2Y			5	01
	2	**EP600220**	Bind Head Tapping Screw-B	3.0X10 MFZN2Y			3	01
	3	**EP600390**	Bind Head Tapping Screw-B	3.0X16 MFZN2Y				01
	4	**VT461100**	Transistor Holder	A			3	03
	5	**VT461200**	Transistor Holder	B				03
	6	**--**	Heat Sink			(V761610)		
	7	**--**	Circuit Board	MA80S		U (WB55500)		
	7	**--**	Circuit Board	MA80S		E,N,B,K (WC03050)		

*: New Parts

RANK: Japan only

FU60 ASSEMBLY

• **Top view**

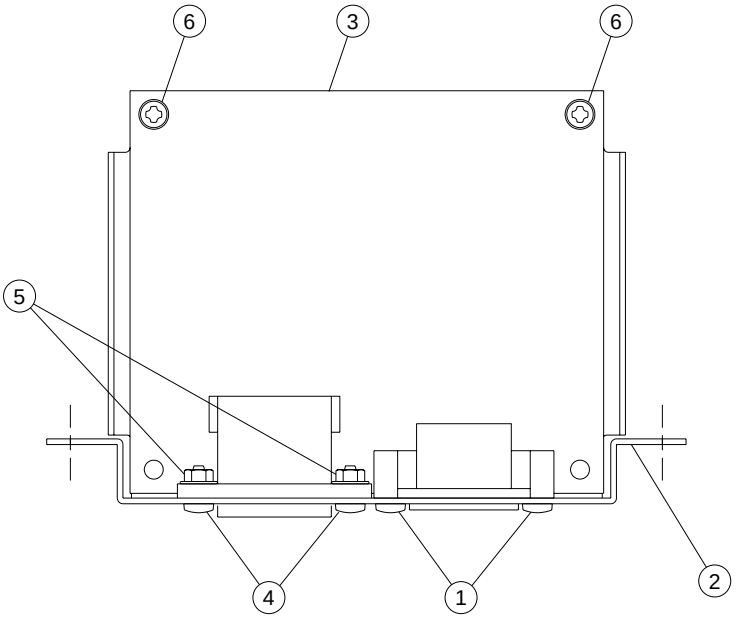

• **Front view**

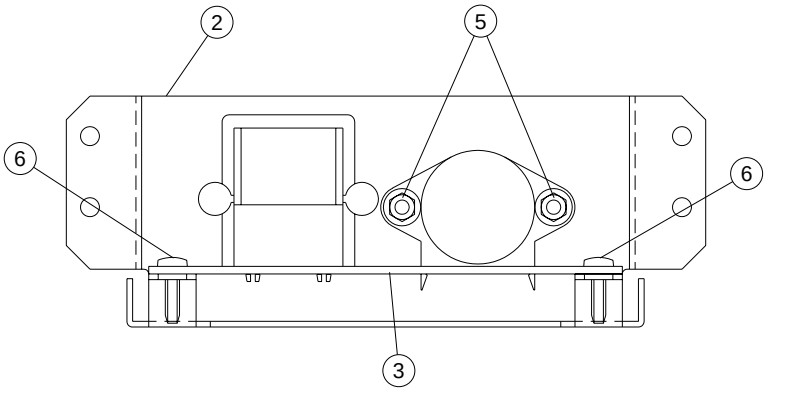

REF NO.	PART NO.	DESCRIPTION			REMARKS	QTY	RANK
		FU60 ASSEMBLY			CVP-303/CVP-303M/CVP-303C		
	VT152100	FU60 Assembly			U		10
	VT152200	FU60 Assembly			E,B,K		10
	VT153300	FU60 Assembly			N		12
1	**EP600190**	Bind Head Tapping Screw-B	3.0X8 MFZN2BL			2	01
2	**WB449600**	Panel, AC Inlet	with Cushion		U,E,B,K		05
2	**WB449700**	Panel, AC Inlet	with Cushion		N		
3	**--**	Circuit Board	FU60		U (VT15150)		
3	**--**	Circuit Board	FU60		E,B,K (VT15160)		
3	**--**	Circuit Board	FU60		N (VT15290)		
4	**EG330380**	Bind Head Screw	3.0X10 MFZN2BL		N	2	01
5	**VA211900**	Hexagonal Nut	3.0 MFZN2Y		N	2	01
6	**VE683000**	Bind Head Tapping Screw-B	3.0X12 MFZN2Y			2	01

✻: New Parts

RANK: Japan only

■ PEDAL BOX ASSEMBLY

• **Bottom view**

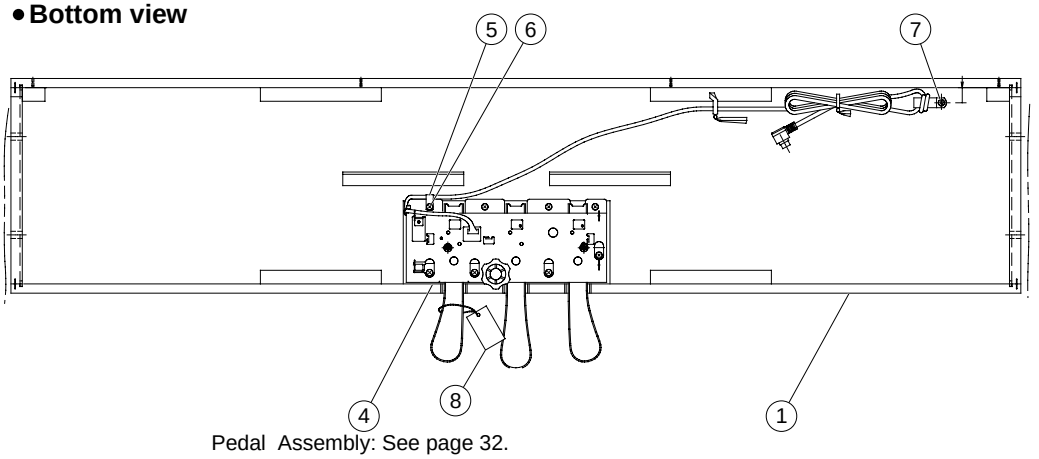

Pedal Assembly: See page 32.

• **Front view**

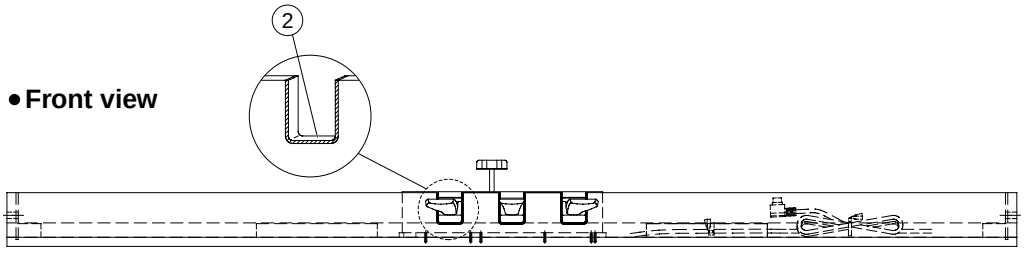

	REF NO.	PART NO.	DESCRIPTION			REMARKS	QTY	RANK
			PEDAL BOX ASSEMBLY			CVP-303/CVP-303M/CVP-303C		
		--	Pedal Box Assembly			CVP-303 (WC16680)		
		--	Pedal Box Assembly			CVP-303M (WC16730)		
		--	Pedal Box Assembly			CVP-303C (WC16810)		
*	1	**WC103900**	Pedal Box			CVP-303		
*	1	**WC129500**	Pedal Box			CVP-303M		
*	1	**WC130000**	Pedal Box			CVP-303C		
	2	**VU464300**	Felt Red	115X12X2			3	03
	4	**V0053100**	Pedal Assembly	(H) 1VR 2SW PK-LF				19
	5	**CB065520**	Nylon Clamp	NK-3N				01
	6	**EP040230**	Bind Head Tapping Screw-1	4.0X14 MFZN2Y			8	01
	7	**03747270**	Truss Head Tapping Screw-1	4.0X12 MFZN2BL				01
	8	**VD966100**	Caution Label					03

*: New Parts

RANK: Japan only

PEDAL ASSEMBLY

• Top view

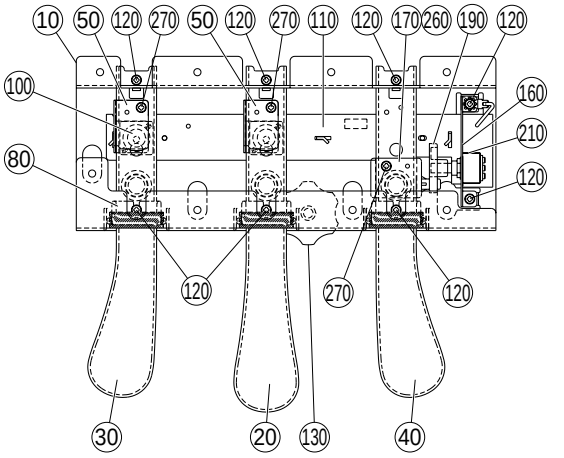

• Side view

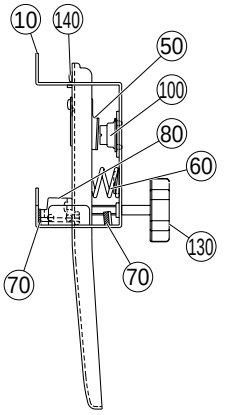

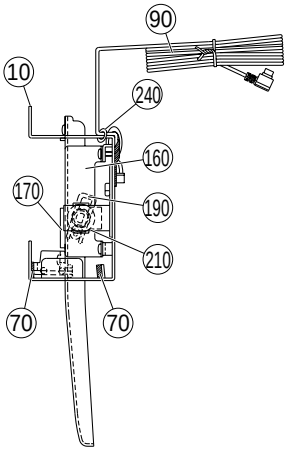

• Bottom view

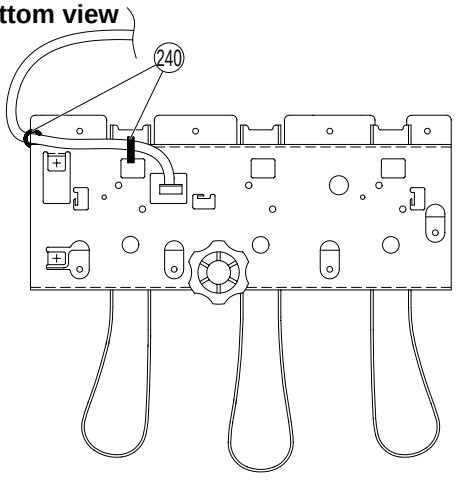

REF NO.	PART NO.	DESCRIPTION			REMARKS	QTY	RANK
		PEDAL ASSEMBLY	(H) 1VR 2SW PK-LF		CVP-303/CVP-303M/CVP-303C		
	V0053100	Pedal Assembly	(H) 1VR 2SW PK-LF				19
10	**VU339700**	Pedal Frame					09
20	**VU362000**	Pedal Piece C	CENTER		SOSTENUTO pedal		08
30	**VU362100**	Pedal Piece L	LEFT		LEFT pedal		08
40	**VU362200**	Pedal Piece R	RIGHT		DAMPER pedal		08
50	**VV433500**	Actuator	PEDAL			2	03
60	**VP348100**	Pedal Spring				3	03
70	**VU346500**	Felt Black	PA			6	03
80	**VU339800**	Shutter	PEDAL			3	03
90	**V0044700**	Connector Assembly	PK-LF				08
100	**VU456000**	Rubber Contact	PEDAL DOME			2	03
110	**WB970400**	Circuit Board	PEDAL (SW)				08
120	**EP600190**	Bind Head Tapping Screw-B	3.0X8 MFZN2BL			8	01
130	**VU379700**	Adjuster					02
140	**TX920280**	Grease	G-31KA 50g		(VE96850)		10
160	**VU455600**	Holder, VR	PEDAL				03
170	**VV475800**	Holder, VR	PEDAL				03
190	**VV476000**	Actuator, VR	PEDAL				03
210	**WB970500**	Circuit Board	PEDAL VR				07
240	**CB069250**	Cord Holder	BK-1			2	01
260	**WA151300**	Spacer	PC 0.5T		FOR ADJUST PEDAL OFFSET		
260	**WB191700**	Spacer	PVC 0.2T				01
260	**V9836700**	Spacer	FIBER 1T				01
260	**V9851400**	Spacer	FIBER 0.5T				01
270	**EP600190**	Bind Head Tapping Screw-B	3.0X8 MFZN2BL			3	01
270	**EP600220**	Bind Head Tapping Screw-B	3.0X10 MFZN2Y			3	01

*: New Parts

RANK: Japan only

BENCH (BC-100DR/BC-100MH/BC-100CH)

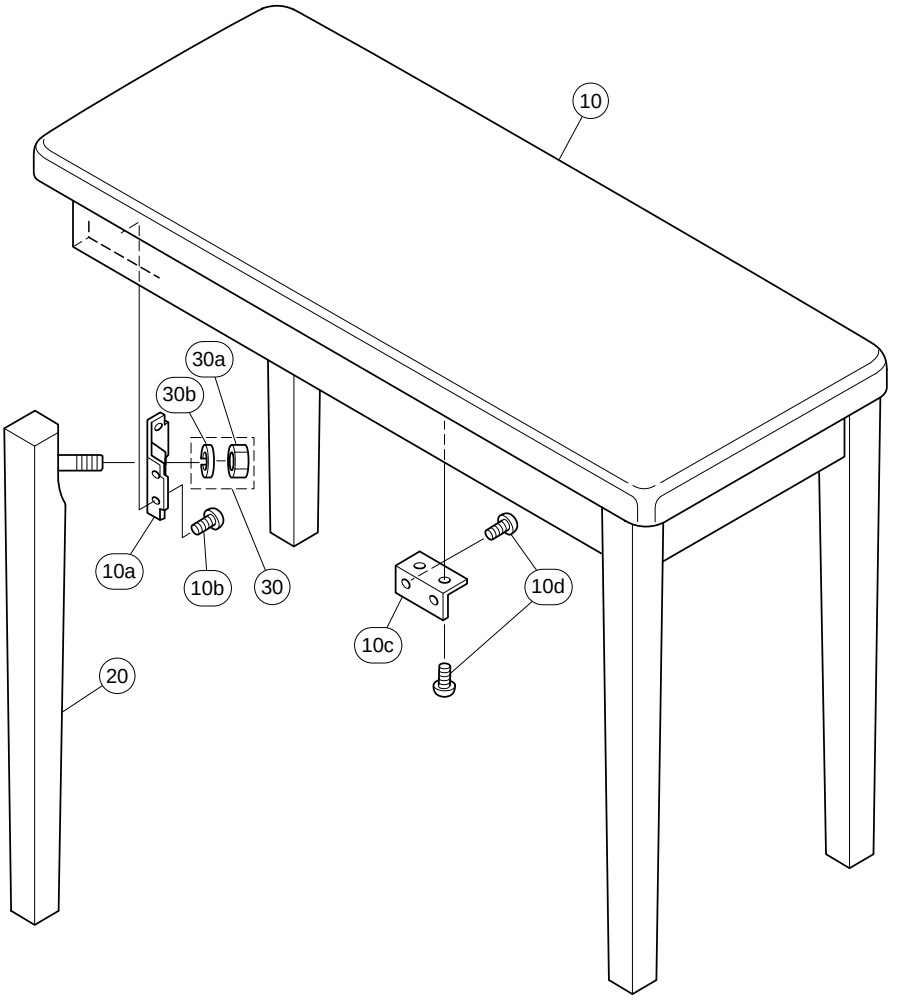

REF NO.	PART NO.	DESCRIPTION			REMARKS	QTY	RANK
		BENCH	BC-100DR/MH/CH		CVP-303/CVP-303M/CVP-303C		
	V5531400	Bench	BC-100DR		CVP-303 U,N,K		20
	V5531500	Bench	BC-100MH		CVP-303M U,N,K		20
	V5531600	Bench	BC-100CH		CVP-303C U,N,K		20
A	--	Bench	BC-100DR		CVP-303 (V553200)		
A	--	Bench	BC-100MH		CVP-303M (V553210)		
A	--	Bench	BC-100CH		CVP-303C (V553220)		
10	**V5532900**	Bench Board Assembly	DR		CVP-303		16
10	**V5533000**	Bench Board Assembly	MH		CVP-303M		15
10	**V5533100**	Bench Board Assembly	CH		CVP-303C		16
10a	**AA016480**	Holder, Leg				4	02
10b	**EP030190**	Bind Head Tapping Screw-1	3.5X16 MFZN2Y			16	01
10c	**VC969300**	Holder, Bench Board				4	03
10d	**EP030170**	Bind Head Tapping Screw-1	3.5X14 MFZN2Y			16	01
20	**V8176300**	Leg Assembly	DR		CVP-303	4	08
20	**V8176400**	Leg Assembly	MH		CVP-303M	4	11
20	**V8176500**	Leg Assembly	CH		CVP-303C	4	
30	**VS530500**	Screw Set					03
30a	**03761250**	Hexagonal Nut	#1 10.0X1.25 MFZN2			4	01
30b	**03765820**	Spring Washer	#2 10.0 MFZN2Y			4	01
		ACCESSORY					
	--	Wrench			(V688680)		

✻: New Parts

RANK: Japan only

■ ELECTRICAL PARTS

	REF NO.	PART NO.	DESCRIPTION			REMARKS	QTY	RANK
			ELECTRICAL PARTS			CVP-303/CVP-303M/CVP-303C		
*		**WB935600**	Circuit Board	AJACK		(X4469B0)		
*		**WC748200**	Circuit Board	DAC1A		(X5174B0)		
*		**WB922200**	Circuit Board	DJACK		(X4470D0)		
*		**WC022600**	Circuit Board	DM		(X4405D0)		
*		**WB942700**	Circuit Board	PNR(ENC,PNR1,PNR2)		(X4531C0)		
		--	Circuit Board	ENC		(WB94270,WB94330,X4531C0)		
		--	Circuit Board	PNR1		(WB94270,WB94280,X4531C0)		
		--	Circuit Board	PNR2		(WB94270,WB94290,X4531C0)		
*		**WC034000**	Circuit Board	EQ		(X4413A0)		
		--	Circuit Board	FU60		U (VT15150)(XQ395A0)		
		--	Circuit Board	FU60		E,B,K (VT15160)(XQ395A0)		
		--	Circuit Board	FU60		N (VT15290)(XQ395A0)		
		V8514800	Circuit Board	GHD EBUS L		(XZ138D0)		13
		V6588200	Circuit Board	MK SUB		(XZ142B0)		10
		V8521500	Circuit Board	GHD H		(X2218A0)		08
		V8521400	Circuit Board	GHD M		(X2217A0)		08
*		**WC016600**	Circuit Board	HP		(XQ795A0,XT162A0)		
*		**WB943900**	Circuit Board	INV		(WB94350)(X4532D0)		
*		**WB943700**	Circuit Board	MV2		(WB94350)(X4532D0)		
*		**WB943600**	Circuit Board	PNC		(WB94350)(X4532D0)		
		--	Circuit Board	MA80S		U (WB55500)(X4384D0)		
		--	Circuit Board	MA80S		E,N,B,K (WC03050)(X4384D0)		
*		**WD052300**	Circuit Board	MIC		(XV507D0)		
*		**WC175500**	Circuit Board	NET1		(XT123B0)		
		WB970400	Circuit Board	PEDAL (SW)		(WB97030)(XR780C0)		08
		WB970500	Circuit Board	PEDAL VR		(WB97030)(XR780C0)		07
*		**WC561200**	Circuit Board	PJK		(X5143A0)		
		VU659100	Circuit Board	PL		(XR898A0)		03
*		**WD159000**	Circuit Board	PNL(PNL1,PNL2)		(X4479D0)		
		--	Circuit Board	PNL1		(WD15900,WD15910,X4479D0)		
		--	Circuit Board	PNL2		(WD15900,WD15920,X4479D0)		
		WB704100	Circuit Board	SM		(X4511C0)		
*		**WB935600**	Circuit Board	AJACK		(X4469B0)		
	C0001	**UR847470**	Electrolytic Cap.	47.00 25.0V				01
	C0002	**UR847470**	Electrolytic Cap.	47.00 25.0V				01
	C0003	**US063100**	Ceramic Capacitor-B (chip)	1000P 50V K				01
	C0004	**US063100**	Ceramic Capacitor-B (chip)	1000P 50V K				01
	C0005	**UR847470**	Electrolytic Cap.	47.00 25.0V				01
	C0006	**UR847470**	Electrolytic Cap.	47.00 25.0V				01
	C0007	**US062100**	Ceramic Capacitor-SL(chip)	100P 50V J				01
	-0010	**US062100**	Ceramic Capacitor-SL(chip)	100P 50V J				01
	C0011	**UN866470**	Electrolytic Cap.-BP	4.70 50.0V				01
	C0012	**UN866470**	Electrolytic Cap.-BP	4.70 50.0V				01
	C0015	**US063100**	Ceramic Capacitor-B (chip)	1000P 50V K				01
	C0016	**US063100**	Ceramic Capacitor-B (chip)	1000P 50V K				01
	C0017	**US061220**	Ceramic Capacitor-CH(chip)	22P 50V J				01
	C0019	**US061220**	Ceramic Capacitor-CH(chip)	22P 50V J				01
	C0021	**UN866470**	Electrolytic Cap.-BP	4.70 50.0V				01
	C0022	**UN866470**	Electrolytic Cap.-BP	4.70 50.0V				01
	C0023	**US063100**	Ceramic Capacitor-B (chip)	1000P 50V K				01
	C0024	**US063100**	Ceramic Capacitor-B (chip)	1000P 50V K				01
	C0025	**UR847470**	Electrolytic Cap.	47.00 25.0V				01
	C0026	**UR847470**	Electrolytic Cap.	47.00 25.0V				01
	C0027	**UR848220**	Electrolytic Cap.	220.00 25.0V				01
	C0028	**UR848220**	Electrolytic Cap.	220.00 25.0V				01
	C0029	**US064100**	Ceramic Capacitor-B (chip)	0.0100 50V K				01
	-0034	**US064100**	Ceramic Capacitor-B (chip)	0.0100 50V K				01
	C0035	**US062560**	Ceramic Capacitor-SL(chip)	560P 50V J				01
	C0036	**US062560**	Ceramic Capacitor-SL(chip)	560P 50V J				01
	C0037	**UR846470**	Electrolytic Cap.	4.70 25.0V				01
	C0038	**UR846470**	Electrolytic Cap.	4.70 25.0V				01
	C0039	**US062100**	Ceramic Capacitor-SL(chip)	100P 50V J				01
	C0040	**US062100**	Ceramic Capacitor-SL(chip)	100P 50V J				01
	C0041	**US061560**	Ceramic Capacitor-CH(chip)	56P 50V J				01
	C0042	**US061560**	Ceramic Capacitor-CH(chip)	56P 50V J				01
	C0043	**UR838100**	Electrolytic Cap.	100.00 16.0V				01
	C0044	**US064100**	Ceramic Capacitor-B (chip)	0.0100 50V K				01
	C0045	**UR838100**	Electrolytic Cap.	100.00 16.0V				01

*: New Parts

RANK: Japan only

REF NO.	PART NO.	DESCRIPTION			REMARKS	QTY	RANK
C0046	**US064100**	Ceramic Capacitor-B (chip)	0.0100 50V K				01
C0047	**US145100**	Ceramic Capacitor-F (chip)	0.1000 25V Z				01
C0048	**US145100**	Ceramic Capacitor-F (chip)	0.1000 25V Z				01
C0049	**UN848220**	Electrolytic Cap.-BP	220.00 25.0V				01
C0050	**UN848220**	Electrolytic Cap.-BP	220.00 25.0V				01
C0051	**US064100**	Ceramic Capacitor-B (chip)	0.0100 50V K				01
-0054	**US064100**	Ceramic Capacitor-B (chip)	0.0100 50V K				01
CN001	**VB390700**	Connector Base Post	PH 11P TE				01
CN002	**VB390400**	Connector Base Post	PH 8P TE				01
CN003	**LB918020**	Base Post Connector	XH 2P TE				01
CN004	**VB390300**	Connector Base Post	PH 7P TE				01
CN005	**VB390600**	Connector Base Post	PH 10P TE				01
D0001	**VB493900**	Diode	MA221				01
-0003	**VB493900**	Diode	MA221				01
D0001	**VV925900**	Diode	RLS-73 TE-11				01
-0003	**VV925900**	Diode	RLS-73 TE-11				01
IC001	**XF291A00**	IC	UPC4570G2		OP AMP		03
IC002	**XF291A00**	IC	UPC4570G2		OP AMP		03
IC003	**XT131A00**	IC	LA6517M-TE-R		OP AMP		04
JK001	**VP599300**	Pin Jack	2P YKC21-3120		AUX OUT(LEVEL FIXED L,R)		02
JK002	**VL080500**	Phone Jack	YKB21-5076		AUX IN(L/L+R)		02
JK003	**VS115400**	Phone Jack Black	LGR4609-7000		AUX IN(R)		01
JK004	**VL080500**	Phone Jack	YKB21-5076		AUX OUT(L/L+R)		02
JK005	**VS115400**	Phone Jack Black	LGR4609-7000		AUX OUT(R)		01
L0001	**RD350000**	Carbon Resistor (chip)	0 63M J				01
-0006	**RD350000**	Carbon Resistor (chip)	0 63M J				01
R0005	**RD355680**	Carbon Resistor (chip)	680.0 63M J				01
R0006	**RD355680**	Carbon Resistor (chip)	680.0 63M J				01
R0007	**RD356470**	Carbon Resistor (chip)	4.7K 63M J				01
R0008	**RD356470**	Carbon Resistor (chip)	4.7K 63M J				01
R0009	**RD355100**	Carbon Resistor (chip)	100.0 63M J				01
R0010	**RD355100**	Carbon Resistor (chip)	100.0 63M J				01
R0011	**RD357100**	Carbon Resistor (chip)	10.0K 63M J				01
-0013	**RD357100**	Carbon Resistor (chip)	10.0K 63M J				01
R0014	**RD357120**	Carbon Resistor (chip)	12.0K 63M J				01
R0015	**RD357100**	Carbon Resistor (chip)	10.0K 63M J				01
R0016	**RD357120**	Carbon Resistor (chip)	12.0K 63M J				01
R0017	**RD357220**	Carbon Resistor (chip)	22.0K 63M J				01
R0018	**RD357220**	Carbon Resistor (chip)	22.0K 63M J				01
R0019	**RD350000**	Carbon Resistor (chip)	0 63M J				01
R0020	**RD350000**	Carbon Resistor (chip)	0 63M J				01
R0021	**RD357470**	Carbon Resistor (chip)	47.0K 63M J				01
R0022	**RD357470**	Carbon Resistor (chip)	47.0K 63M J				01
R0023	**RD358100**	Carbon Resistor (chip)	100.0K 63M J				01
R0024	**RD358100**	Carbon Resistor (chip)	100.0K 63M J				01
R0025	**RD357100**	Carbon Resistor (chip)	10.0K 63M J				01
R0026	**RD357100**	Carbon Resistor (chip)	10.0K 63M J				01
R0027	**RD355680**	Carbon Resistor (chip)	680.0 63M J				01
R0028	**RD355680**	Carbon Resistor (chip)	680.0 63M J				01
R0029	**RD356470**	Carbon Resistor (chip)	4.7K 63M J				01
R0030	**RD356470**	Carbon Resistor (chip)	4.7K 63M J				01
R0031	**RD357100**	Carbon Resistor (chip)	10.0K 63M J				01
R0032	**RD357100**	Carbon Resistor (chip)	10.0K 63M J				01
R0033	**RD355100**	Carbon Resistor (chip)	100.0 63M J				01
R0034	**RD355100**	Carbon Resistor (chip)	100.0 63M J				01
R0035	**RD358100**	Carbon Resistor (chip)	100.0K 63M J				01
R0036	**RD358100**	Carbon Resistor (chip)	100.0K 63M J				01
R0037	**RD357470**	Carbon Resistor (chip)	47.0K 63M J				01
R0038	**RD357470**	Carbon Resistor (chip)	47.0K 63M J				01
R0039	**RD357560**	Carbon Resistor (chip)	56.0K 63M J				01
R0040	**RD357560**	Carbon Resistor (chip)	56.0K 63M J				01
R0041	**RD354330**	Carbon Resistor (chip)	33.0 63M J				01
R0042	**RD354330**	Carbon Resistor (chip)	33.0 63M J				01
R0043	**RD357100**	Carbon Resistor (chip)	10.0K 63M J				01
R0044	**RD357100**	Carbon Resistor (chip)	10.0K 63M J				01
R0045	**RD350000**	Carbon Resistor (chip)	0 63M J				01
R0046	**RD350000**	Carbon Resistor (chip)	0 63M J				01
R0048	**RD350000**	Carbon Resistor (chip)	0 63M J				01
R0050	**RD356470**	Carbon Resistor (chip)	4.7K 63M J				01
R0051	**RD350000**	Carbon Resistor (chip)	0 63M J				01

✻: New Parts

RANK: Japan only

REF NO.	PART NO.	DESCRIPTION			REMARKS	QTY	RANK
R0052	**RD357470**	Carbon Resistor (chip)	47.0K 63M J				01
R0053	**RD356180**	Carbon Resistor (chip)	1.8K 63M J				01
R0054	**RD356470**	Carbon Resistor (chip)	4.7K 63M J				01
R0055	**RD356100**	Carbon Resistor (chip)	1.0K 63M J				01
R0056	**RD357220**	Carbon Resistor (chip)	22.0K 63M J				01
R0058	**RD357330**	Carbon Resistor (chip)	33.0K 63M J				01
R0059	**RD357330**	Carbon Resistor (chip)	33.0K 63M J				01
R0061	**RD350000**	Carbon Resistor (chip)	0 63M J				01
R0064	**RD355100**	Carbon Resistor (chip)	100.0 63M J				01
R0065	**RD355100**	Carbon Resistor (chip)	100.0 63M J				01
RY001	**V8245600**	Relay	DC ATX203 12V				04
-003	**V8245600**	Relay	DC ATX203 12V				04
RY001	**V8616500**	Relay	DC G6S-2 12V				04
-003	**V8616500**	Relay	DC G6S-2 12V				04
TR001	**VJ927100**	Transistor	2SC2712 Y				01
TR001	**VV556400**	Transistor	2SC2412K Q,R,S				01
TR001	**VV925400**	Transistor	2SC2712 GR				01
TR001	**V4767500**	Transistor	2SD601A-(TX) Q,R,S				01
TR002	**VJ927100**	Transistor	2SC2712 Y				01
TR002	**VV556400**	Transistor	2SC2412K Q,R,S				01
TR002	**VV925400**	Transistor	2SC2712 GR				01
TR002	**V4767500**	Transistor	2SD601A-(TX) Q,R,S				01
TR003	**VV556500**	Transistor	2SA1037AK Q,R,S				01
TR003	**V8819500**	Transistor	2SA1235A E,F				
TR003	**IB070900**	Transistor	2SB709A P,Q,R,S				01
*	**WC748200**	Circuit Board	DAC1A		(X5174B0)		
C0101	**US145100**	Ceramic Capacitor-F (chip)	0.1000 25V Z				01
C0102	**UF018100**	Electrolytic Cap. (chip)	100 6.3V				01
C0103	**US145100**	Ceramic Capacitor-F (chip)	0.1000 25V Z				01
C0104	**US064100**	Ceramic Capacitor-B (chip)	0.0100 50V K				01
C0105	**UF046470**	Electrolytic Cap. (chip)	4.7 25V				01
C0106	**US145100**	Ceramic Capacitor-F (chip)	0.1000 25V Z				01
C0107	**UF138220**	Electrolytic Cap. (chip)	220 16V UUR1C2				01
C0108	**UF138220**	Electrolytic Cap. (chip)	220 16V UUR1C2				01
C0109	**US062100**	Ceramic Capacitor-SL(chip)	100P 50V J				01
C0110	**US062100**	Ceramic Capacitor-SL(chip)	100P 50V J				01
C0301	**RD350000**	Carbon Resistor (chip)	0 63M J				01
C0302	**US145100**	Ceramic Capacitor-F (chip)	0.1000 25V Z				01
C0303	**UF037100**	Electrolytic Cap. (chip)	10 16V				01
C0304	**UF037100**	Electrolytic Cap. (chip)	10 16V				01
C0305	**US145100**	Ceramic Capacitor-F (chip)	0.1000 25V Z				01
C0306	**US145100**	Ceramic Capacitor-F (chip)	0.1000 25V Z				01
C0307	**UF037100**	Electrolytic Cap. (chip)	10 16V				01
C0308	**US145100**	Ceramic Capacitor-F (chip)	0.1000 25V Z				01
C0309	**UF037100**	Electrolytic Cap. (chip)	10 16V				01
C0310	**UF227100**	Electrolytic Cap.-BP(chip)	10 10V UWP1A1				01
-0313	**UF227100**	Electrolytic Cap.-BP(chip)	10 10V UWP1A1				01
C0314	**US063100**	Ceramic Capacitor-B (chip)	1000P 50V K				01
C0315	**US063100**	Ceramic Capacitor-B (chip)	1000P 50V K				01
C0316	**US062180**	Ceramic Capacitor-SL(chip)	180P 50V J				01
-0319	**US062180**	Ceramic Capacitor-SL(chip)	180P 50V J				01
C0324	**US145100**	Ceramic Capacitor-F (chip)	0.1000 25V Z				01
C0325	**US145100**	Ceramic Capacitor-F (chip)	0.1000 25V Z				01
C0401	**UF066220**	Electrolytic Cap. (chip)	2.2 50V				01
C0402	**US145100**	Ceramic Capacitor-F (chip)	0.1000 25V Z				01
C0405	**US145100**	Ceramic Capacitor-F (chip)	0.1000 25V Z				01
C0406	**UF037100**	Electrolytic Cap. (chip)	10 16V				01
C0407	**UF037100**	Electrolytic Cap. (chip)	10 16V				01
C0408	**US145100**	Ceramic Capacitor-F (chip)	0.1000 25V Z				01
C0410	**UF066100**	Electrolytic Cap. (chip)	1 50V				01
C0411	**UF066100**	Electrolytic Cap. (chip)	1 50V				01
C0412	**UF037100**	Electrolytic Cap. (chip)	10 16V				01
C0413	**US061560**	Ceramic Capacitor-CH(chip)	56P 50V J				01
C0414	**US061560**	Ceramic Capacitor-CH(chip)	56P 50V J				01
C0415	**US062330**	Ceramic Capacitor-SL(chip)	330P 50V J				01
C0416	**US062330**	Ceramic Capacitor-SL(chip)	330P 50V J				01
C0417	**US062220**	Ceramic Capacitor-SL(chip)	220P 50V J				01
C0418	**US062220**	Ceramic Capacitor-SL(chip)	220P 50V J				01
C0419	**US061470**	Ceramic Capacitor-CH(chip)	47P 50V J				01

*: New Parts

RANK: Japan only

REF NO.	PART NO.	DESCRIPTION			REMARKS	QTY	RANK
C0420	**US061470**	Ceramic Capacitor-CH(chip)	47P 50V J				01
C0421	**UF046470**	Electrolytic Cap. (chip)	4.7 25V				01
C0422	**UF046470**	Electrolytic Cap. (chip)	4.7 25V				01
C0423	**US062100**	Ceramic Capacitor-SL(chip)	100P 50V J				01
C0424	**US062100**	Ceramic Capacitor-SL(chip)	100P 50V J				01
C0425	**US063100**	Ceramic Capacitor-B (chip)	1000P 50V K				01
C0426	**US063100**	Ceramic Capacitor-B (chip)	1000P 50V K				01
C0427	**UF066100**	Electrolytic Cap. (chip)	1 50V				01
C0428	**UF066100**	Electrolytic Cap. (chip)	1 50V				01
C0429	**US145100**	Ceramic Capacitor-F (chip)	0.1000 25V Z				01
C0430	**UF037100**	Electrolytic Cap. (chip)	10 16V				01
C0431	**US145100**	Ceramic Capacitor-F (chip)	0.1000 25V Z				01
-0433	**US145100**	Ceramic Capacitor-F (chip)	0.1000 25V Z				01
C0434	**UF037100**	Electrolytic Cap. (chip)	10 16V				01
C0601	**US145100**	Ceramic Capacitor-F (chip)	0.1000 25V Z				01
C0602	**US145100**	Ceramic Capacitor-F (chip)	0.1000 25V Z				01
C0701	**US064100**	Ceramic Capacitor-B (chip)	0.0100 50V K				01
C0702	**US145100**	Ceramic Capacitor-F (chip)	0.1000 25V Z				01
C0703	**US145100**	Ceramic Capacitor-F (chip)	0.1000 25V Z				01
CN101	**V6478900**	Connector, FFC/FPC	52808 26P TE				01
CN601	**VT389200**	Base Post Connector	PH 11P TE				01
CN701	**VT388600**	Base Post Connector	PH 5P TE				01
D0101	**VN681100**	Diode	EC10DS4-TE12L				01
D0101	**VS201100**	Diode	D1F60				01
D0102	**VN681100**	Diode	EC10DS4-TE12L				01
D0102	**VS201100**	Diode	D1F60				01
D0401	**VB493900**	Diode	MA221				01
-0404	**VB493900**	Diode	MA221				01
D0401	**VV925900**	Diode	RLS-73 TE-11				01
-0404	**VV925900**	Diode	RLS-73 TE-11				01
IC101	**XV492A00**	IC	UPC2905T-E1		REGULATOR +5V		03
IC102	**XZ642A00**	IC	TAR5S33		REGULATOR +3.3V		
IC301	**XW029A00**	IC	AK4393VF-E2		DAC		07
IC302	**XF291A00**	IC	UPC4570G2		OP AMP		03
IC401	**X5219A00**	IC	AK5381VT-E2		DAC		05
IC402	**XF291A00**	IC	UPC4570G2		OP AMP		03
-404	**XF291A00**	IC	UPC4570G2		OP AMP		03
J0101	**RD350000**	Carbon Resistor (chip)	0 63M J				01
J0104	**RD350000**	Carbon Resistor (chip)	0 63M J				01
L0601	**RD350000**	Carbon Resistor (chip)	0 63M J				01
L0602	**RD350000**	Carbon Resistor (chip)	0 63M J				01
L0603	**V4830100**	Chip Inductance	MMZ1608Y601C				01
-0606	**V4830100**	Chip Inductance	MMZ1608Y601C				01
L0701	**V4830100**	Chip Inductance	MMZ1608Y601C				01
R0102	**RD350000**	Carbon Resistor (chip)	0 63M J				01
-0104	**RD350000**	Carbon Resistor (chip)	0 63M J				01
R0106	**RD357100**	Carbon Resistor (chip)	10.0K 63M J				01
-0108	**RD357100**	Carbon Resistor (chip)	10.0K 63M J				01
R0109	**RD350000**	Carbon Resistor (chip)	0 63M J				01
R0110	**RD350000**	Carbon Resistor (chip)	0 63M J				01
R0111	**RD154270**	Carbon Resistor (chip)	27.0 1/4 J				01
-0114	**RD154270**	Carbon Resistor (chip)	27.0 1/4 J				01
R0115	**RD350000**	Carbon Resistor (chip)	0 63M J				01
R0121	**RD350000**	Carbon Resistor (chip)	0 63M J				01
R0301	**RD356330**	Carbon Resistor (chip)	3.3K 63M J				01
-0304	**RD356330**	Carbon Resistor (chip)	3.3K 63M J				01
R0305	**RD357120**	Carbon Resistor (chip)	12.0K 63M J				01
-0307	**RD357120**	Carbon Resistor (chip)	12.0K 63M J				01
R0308	**RD356470**	Carbon Resistor (chip)	4.7K 63M J				01
R0309	**RD356470**	Carbon Resistor (chip)	4.7K 63M J				01
R0310	**RD357120**	Carbon Resistor (chip)	12.0K 63M J				01
R0311	**RD356470**	Carbon Resistor (chip)	4.7K 63M J				01
R0312	**RD356470**	Carbon Resistor (chip)	4.7K 63M J				01
R0315	**RD354470**	Carbon Resistor (chip)	47.0 63M J				01
R0316	**RD354470**	Carbon Resistor (chip)	47.0 63M J				01
R0317	**RD350000**	Carbon Resistor (chip)	0 63M J				01
R0320	**RD350000**	Carbon Resistor (chip)	0 63M J				01
R0401	**RD355270**	Carbon Resistor (chip)	270.0 63M J				01
R0402	**RD355220**	Carbon Resistor (chip)	220.0 63M J				01
R0403	**RD355220**	Carbon Resistor (chip)	220.0 63M J				01

✻: New Parts

RANK: Japan only

REF NO.	PART NO.	DESCRIPTION			REMARKS	QTY	RANK
R0404	**RD357100**	Carbon Resistor (chip)	10.0K 63M J				01
-0409	**RD357100**	Carbon Resistor (chip)	10.0K 63M J				01
R0410	**RD358100**	Carbon Resistor (chip)	100.0K 63M J				01
-0413	**RD358100**	Carbon Resistor (chip)	100.0K 63M J				01
R0414	**RD356100**	Carbon Resistor (chip)	1.0K 63M J				01
R0415	**RD356100**	Carbon Resistor (chip)	1.0K 63M J				01
R0416	**RD358100**	Carbon Resistor (chip)	100.0K 63M J				01
R0417	**RD358100**	Carbon Resistor (chip)	100.0K 63M J				01
R0418	**RD355100**	Carbon Resistor (chip)	100.0 63M J				01
R0419	**RD356330**	Carbon Resistor (chip)	3.3K 63M J				01
R0420	**RD356330**	Carbon Resistor (chip)	3.3K 63M J				01
R0421	**RD356470**	Carbon Resistor (chip)	4.7K 63M J				01
R0422	**RD356470**	Carbon Resistor (chip)	4.7K 63M J				01
R0424	**RD355100**	Carbon Resistor (chip)	100.0 63M J				01
R0425	**RD350000**	Carbon Resistor (chip)	0 63M J				01
R0601	**RD350000**	Carbon Resistor (chip)	0 63M J				01
R0701	**RD356560**	Carbon Resistor (chip)	5.6K 63M J				01
R0702	**RD355100**	Carbon Resistor (chip)	100.0 63M J				01
TR101	**VJ927100**	Transistor	2SC2712 Y				01
TR101	**VV556400**	Transistor	2SC2412K Q,R,S				01
TR101	**VV925400**	Transistor	2SC2712 GR				01
TR101	**V4767500**	Transistor	2SD601A-(TX) Q,R,S				01
ZD401	**V8960900**	Zener Diode	MA8024-(TX) 2.4V				01
-404	**V8960900**	Zener Diode	MA8024-(TX) 2.4V				01
*	**WB922200**	Circuit Board	DJACK		(X4470D0)		
C0101	**UR818100**	Electrolytic Cap.	100.00 6.3V				01
C0102	**US061220**	Ceramic Capacitor-CH(chip)	22P 50V J				01
-0106	**US061220**	Ceramic Capacitor-CH(chip)	22P 50V J				01
C0201	**US064100**	Ceramic Capacitor-B (chip)	0.0100 50V K				01
C0203	**US064100**	Ceramic Capacitor-B (chip)	0.0100 50V K				01
C0204	**UR827220**	Electrolytic Cap.	22.00 10.0V				01
C0405	**US062100**	Ceramic Capacitor-SL(chip)	100P 50V J				01
C0406	**US064100**	Ceramic Capacitor-B (chip)	0.0100 50V K				01
C0407	**UR827220**	Electrolytic Cap.	22.00 10.0V				01
CN101	**VB390200**	Connector Base Post	PH 6P TE				01
CN102	**VB390100**	Connector Base Post	PH 5P TE				01
CN201	**VB390500**	Connector Base Post	PH 9P TE				03
CN401	**VB390600**	Connector Base Post	PH 10P TE				01
CN402	**VB390100**	Connector Base Post	PH 5P TE				01
D0201	**VB493900**	Diode	MA221				01
D0201	**VV925900**	Diode	RLS-73 TE-11				01
D0202	**VB493900**	Diode	MA221				01
D0202	**VV925900**	Diode	RLS-73 TE-11				01
D0407	**VB493900**	Diode	MA221				01
D0407	**VV925900**	Diode	RLS-73 TE-11				01
D0408	**VB493900**	Diode	MA221				01
D0408	**VV925900**	Diode	RLS-73 TE-11				01
IC101	**X5108A00**	IC	SN75240P		USB TRANSIENT SUPPRESSOR		04
IC201	**VD473200**	Photo Coupler	6N137				05
J0201	**--**	Jumper Wire	0.55		(VA07890)		
-0205	**--**	Jumper Wire	0.55		(VA07890)		
J0901	**RD350000**	Carbon Resistor (chip)	0 63M J				01
J0909	**RD350000**	Carbon Resistor (chip)	0 63M J				01
JK101	**WA245700**	USB Connector	YKF45-0027 4P SE		TO DEVICE (USB)		02
JK102	**V6802600**	USB Jack	4P SE		TO HOST (USB)		02
JK102	**V9016000**	USB Connector	YKF45-0021 4P SE				02
JK201	**VT202500**	DIN Connector	5P YKF51-50		MIDI IN		01
JK202	**VT202500**	DIN Connector	5P YKF51-50		MIDI OUT		01
JK203	**VT202500**	DIN Connector	5P YKF51-50		MIDI THRU		01
JK402	**VS115400**	Phone Jack Black	LGR4609-7000		AUX PEDAL		01
L0101	**--**	Jumper Wire	0.55		(VA07890)		
L0105	**--**	Jumper Wire	0.55		(VA07890)		
L0106	**--**	Jumper Wire	0.55		(VA07890)		
L0110	**VB835000**	Coil	FL5R200QNT 20uH				01
L0201	**VQ724900**	Chip Inductance	BK2125HM601-T				01
-0206	**VQ724900**	Chip Inductance	BK2125HM601-T				01
L0207	**VB835000**	Coil	FL5R200QNT 20uH				01
L0405	**VQ724900**	Chip Inductance	BK2125HM601-T				01
-0407	**VQ724900**	Chip Inductance	BK2125HM601-T				01

*: New Parts

RANK: Japan only

REF NO.	PART NO.	DESCRIPTION			REMARKS	QTY	RANK
R0201	**RD356100**	Carbon Resistor (chip)	1.0K 63M J				01
R0202	**RD355220**	Carbon Resistor (chip)	220.0 63M J				01
R0203	**RD357220**	Carbon Resistor (chip)	22.0K 63M J				01
R0204	**RD357220**	Carbon Resistor (chip)	22.0K 63M J				01
R0205	**RD357100**	Carbon Resistor (chip)	10.0K 63M J				01
R0206	**RD356150**	Carbon Resistor (chip)	1.5K 63M J				01
R0207	**RD355220**	Carbon Resistor (chip)	220.0 63M J				01
R0208	**RD355220**	Carbon Resistor (chip)	220.0 63M J				01
R0209	**RD357220**	Carbon Resistor (chip)	22.0K 63M J				01
R0210	**RD357220**	Carbon Resistor (chip)	22.0K 63M J				01
R0211	**RD357100**	Carbon Resistor (chip)	10.0K 63M J				01
R0212	**RD356150**	Carbon Resistor (chip)	1.5K 63M J				01
R0213	**RD355220**	Carbon Resistor (chip)	220.0 63M J				01
R0214	**RD355220**	Carbon Resistor (chip)	220.0 63M J				01
R0401	**RD357100**	Carbon Resistor (chip)	10.0K 63M J				01
-0404	**RD357100**	Carbon Resistor (chip)	10.0K 63M J				01
R0405	**RD355220**	Carbon Resistor (chip)	220.0 63M J				01
R0406	**RD154220**	Carbon Resistor (chip)	22.0 1/4 J				01
R0407	**RD356100**	Carbon Resistor (chip)	1.0K 63M J				01
TR201	**VJ927100**	Transistor	2SC2712 Y				01
-204	**VJ927100**	Transistor	2SC2712 Y				01
TR201	**VV556400**	Transistor	2SC2412K Q,R,S				01
-204	**VV556400**	Transistor	2SC2412K Q,R,S				01
TR201	**VV925400**	Transistor	2SC2712 GR				01
-204	**VV925400**	Transistor	2SC2712 GR				01
TR201	**V4767500**	Transistor	2SD601A-(TX) Q,R,S				01
-204	**V4767500**	Transistor	2SD601A-(TX) Q,R,S				01
*	**WC022600**	Circuit Board	DM		(X4405D0)		
C0001	**UF037100**	Electrolytic Cap. (chip)	10 16V				01
C0002	**US135100**	Ceramic Capacitor-F (chip)	0.1000 16V Z				01
C0004	**US064100**	Ceramic Capacitor-B (chip)	0.0100 50V K				01
C0005	**US135100**	Ceramic Capacitor-F (chip)	0.1000 16V Z				01
C0006	**V9454200**	Electrolytic Cap. (chip)	220.00 6.3V				03
C0007	**US135100**	Ceramic Capacitor-F (chip)	0.1000 16V Z				01
C0008	**US064100**	Ceramic Capacitor-B (chip)	0.0100 50V K				01
C0009	**UF037100**	Electrolytic Cap. (chip)	10 16V				01
C0010	**US064100**	Ceramic Capacitor-B (chip)	0.0100 50V K				01
C0011	**US064100**	Ceramic Capacitor-B (chip)	0.0100 50V K				01
C0012	**US135100**	Ceramic Capacitor-F (chip)	0.1000 16V Z				01
C0013	**US064100**	Ceramic Capacitor-B (chip)	0.0100 50V K				01
C0016	**UF037100**	Electrolytic Cap. (chip)	10 16V				01
C0017	**US064100**	Ceramic Capacitor-B (chip)	0.0100 50V K				01
-0021	**US064100**	Ceramic Capacitor-B (chip)	0.0100 50V K				01
C0023	**UF037100**	Electrolytic Cap. (chip)	10 16V				01
C0024	**US135100**	Ceramic Capacitor-F (chip)	0.1000 16V Z				01
C0025	**US135100**	Ceramic Capacitor-F (chip)	0.1000 16V Z				01
C0026	**UF038100**	Electrolytic Cap. (chip)	100 16V				01
C0027	**US135100**	Ceramic Capacitor-F (chip)	0.1000 16V Z				01
C0028	**US135100**	Ceramic Capacitor-F (chip)	0.1000 16V Z				01
C0029	**US064100**	Ceramic Capacitor-B (chip)	0.0100 50V K				01
C0030	**US064100**	Ceramic Capacitor-B (chip)	0.0100 50V K				01
C0031	**UF037100**	Electrolytic Cap. (chip)	10 16V				01
C0032	**US064100**	Ceramic Capacitor-B (chip)	0.0100 50V K				01
C0033	**US064100**	Ceramic Capacitor-B (chip)	0.0100 50V K				01
C0034	**US135100**	Ceramic Capacitor-F (chip)	0.1000 16V Z				01
-0036	**US135100**	Ceramic Capacitor-F (chip)	0.1000 16V Z				01
C0037	**UF037100**	Electrolytic Cap. (chip)	10 16V				01
C0038	**US064100**	Ceramic Capacitor-B (chip)	0.0100 50V K				01
-0041	**US064100**	Ceramic Capacitor-B (chip)	0.0100 50V K				01
C0042	**UF037100**	Electrolytic Cap. (chip)	10 16V				01
C0043	**US064100**	Ceramic Capacitor-B (chip)	0.0100 50V K				01
C0045	**US064100**	Ceramic Capacitor-B (chip)	0.0100 50V K				01
C0046	**US064100**	Ceramic Capacitor-B (chip)	0.0100 50V K				01
C0048	**US063100**	Ceramic Capacitor-B (chip)	1000P 50V K				01
C0049	**US064100**	Ceramic Capacitor-B (chip)	0.0100 50V K				01
-0052	**US064100**	Ceramic Capacitor-B (chip)	0.0100 50V K				01
C0054	**US064100**	Ceramic Capacitor-B (chip)	0.0100 50V K				01
-0056	**US064100**	Ceramic Capacitor-B (chip)	0.0100 50V K				01
C0057	**UF037100**	Electrolytic Cap. (chip)	10 16V				01

*: New Parts

RANK: Japan only

REF NO.	PART NO.	DESCRIPTION			REMARKS	QTY	RANK
C0058	**UF037100**	Electrolytic Cap. (chip)	10 16V				01
C0059	**US064100**	Ceramic Capacitor-B (chip)	0.0100 50V K				01
C0060	**US062470**	Ceramic Capacitor-SL(chip)	470P 50V J				01
C0061	**US062470**	Ceramic Capacitor-SL(chip)	470P 50V J				01
C0062	**US064100**	Ceramic Capacitor-B (chip)	0.0100 50V K				01
-0066	**US064100**	Ceramic Capacitor-B (chip)	0.0100 50V K				01
C0068	**UF037100**	Electrolytic Cap. (chip)	10 16V				01
C0071	**UF037100**	Electrolytic Cap. (chip)	10 16V				01
C0073	**US060500**	Ceramic Capacitor-CH(chip)	5P 50V C				01
C0074	**US135100**	Ceramic Capacitor-F (chip)	0.1000 16V Z				01
C0075	**US135100**	Ceramic Capacitor-F (chip)	0.1000 16V Z				01
C0077	**V9454200**	Electrolytic Cap. (chip)	220.00 6.3V				03
C0078	**US060700**	Ceramic Capacitor-CH(chip)	7P 50V D				01
C0079	**US145100**	Ceramic Capacitor-F (chip)	0.1000 25V Z				01
C0080	**US064100**	Ceramic Capacitor-B (chip)	0.0100 50V K				01
C0082	**US145100**	Ceramic Capacitor-F (chip)	0.1000 25V Z				01
C0083	**UF038100**	Electrolytic Cap. (chip)	100 16V				01
C0086	**US135100**	Ceramic Capacitor-F (chip)	0.1000 16V Z				01
C0087	**UF038100**	Electrolytic Cap. (chip)	100 16V				01
C0088	**UF067100**	Electrolytic Cap. (chip)	10 50V				01
C0089	**US062100**	Ceramic Capacitor-SL(chip)	100P 50V J				01
C0090	**US135100**	Ceramic Capacitor-F (chip)	0.1000 16V Z				01
-0092	**US135100**	Ceramic Capacitor-F (chip)	0.1000 16V Z				01
C0093	**UF037100**	Electrolytic Cap. (chip)	10 16V				01
C0094	**US135100**	Ceramic Capacitor-F (chip)	0.1000 16V Z				01
-0096	**US135100**	Ceramic Capacitor-F (chip)	0.1000 16V Z				01
C0097	**UF037100**	Electrolytic Cap. (chip)	10 16V				01
C0099	**US064100**	Ceramic Capacitor-B (chip)	0.0100 50V K				01
C0100	**US064100**	Ceramic Capacitor-B (chip)	0.0100 50V K				01
C0101	**US135100**	Ceramic Capacitor-F (chip)	0.1000 16V Z				01
-0104	**US135100**	Ceramic Capacitor-F (chip)	0.1000 16V Z				01
C0105	**UF066470**	Electrolytic Cap. (chip)	4.7 50V				01
C0106	**US064100**	Ceramic Capacitor-B (chip)	0.0100 50V K				01
-0114	**US064100**	Ceramic Capacitor-B (chip)	0.0100 50V K				01
C0117	**US064100**	Ceramic Capacitor-B (chip)	0.0100 50V K				01
C0118	**US064100**	Ceramic Capacitor-B (chip)	0.0100 50V K				01
C0121	**US064100**	Ceramic Capacitor-B (chip)	0.0100 50V K				01
-0125	**US064100**	Ceramic Capacitor-B (chip)	0.0100 50V K				01
C0126	**US062470**	Ceramic Capacitor-SL(chip)	470P 50V J				01
C0127	**US062470**	Ceramic Capacitor-SL(chip)	470P 50V J				01
C0128	**US064100**	Ceramic Capacitor-B (chip)	0.0100 50V K				01
C0129	**US064100**	Ceramic Capacitor-B (chip)	0.0100 50V K				01
C0130	**UF037100**	Electrolytic Cap. (chip)	10 16V				01
C0131	**US064100**	Ceramic Capacitor-B (chip)	0.0100 50V K				01
C0132	**US062470**	Ceramic Capacitor-SL(chip)	470P 50V J				01
C0133	**US064100**	Ceramic Capacitor-B (chip)	0.0100 50V K				01
C0134	**US062470**	Ceramic Capacitor-SL(chip)	470P 50V J				01
C0135	**US064100**	Ceramic Capacitor-B (chip)	0.0100 50V K				01
C0136	**US062470**	Ceramic Capacitor-SL(chip)	470P 50V J				01
C0137	**US064100**	Ceramic Capacitor-B (chip)	0.0100 50V K				01
C0138	**US062470**	Ceramic Capacitor-SL(chip)	470P 50V J				01
C0139	**US064100**	Ceramic Capacitor-B (chip)	0.0100 50V K				01
C0140	**US062470**	Ceramic Capacitor-SL(chip)	470P 50V J				01
C0141	**US064100**	Ceramic Capacitor-B (chip)	0.0100 50V K				01
C0142	**US062470**	Ceramic Capacitor-SL(chip)	470P 50V J				01
C0143	**US064100**	Ceramic Capacitor-B (chip)	0.0100 50V K				01
C0144	**US062470**	Ceramic Capacitor-SL(chip)	470P 50V J				01
C0145	**US064100**	Ceramic Capacitor-B (chip)	0.0100 50V K				01
C0146	**US062470**	Ceramic Capacitor-SL(chip)	470P 50V J				01
C0147	**US064100**	Ceramic Capacitor-B (chip)	0.0100 50V K				01
C0148	**US062470**	Ceramic Capacitor-SL(chip)	470P 50V J				01
C0149	**US064100**	Ceramic Capacitor-B (chip)	0.0100 50V K				01
C0150	**US062470**	Ceramic Capacitor-SL(chip)	470P 50V J				01
C0151	**US064100**	Ceramic Capacitor-B (chip)	0.0100 50V K				01
C0152	**US062470**	Ceramic Capacitor-SL(chip)	470P 50V J				01
C0153	**US064100**	Ceramic Capacitor-B (chip)	0.0100 50V K				01
C0154	**US062470**	Ceramic Capacitor-SL(chip)	470P 50V J				01
C0155	**US064100**	Ceramic Capacitor-B (chip)	0.0100 50V K				01
C0156	**US062470**	Ceramic Capacitor-SL(chip)	470P 50V J				01
C0157	**US064100**	Ceramic Capacitor-B (chip)	0.0100 50V K				01

✻: New Parts

RANK: Japan only

REF NO.	PART NO.	DESCRIPTION			REMARKS	QTY	RANK
C0158	**US062470**	Ceramic Capacitor-SL(chip)	470P 50V J				01
C0159	**UF037100**	Electrolytic Cap. (chip)	10 16V				01
C0160	**UF018100**	Electrolytic Cap. (chip)	100 6.3V				01
C0161	**UF018100**	Electrolytic Cap. (chip)	100 6.3V				01
C0162	**US135100**	Ceramic Capacitor-F (chip)	0.1000 16V Z				01
C0164	**US064100**	Ceramic Capacitor-B (chip)	0.0100 50V K				01
C0165	**US062470**	Ceramic Capacitor-SL(chip)	470P 50V J				01
C0166	**US062470**	Ceramic Capacitor-SL(chip)	470P 50V J				01
C0167	**US135100**	Ceramic Capacitor-F (chip)	0.1000 16V Z				01
C0168	**V9454200**	Electrolytic Cap. (chip)	220.00 6.3V				03
C0169	**US062470**	Ceramic Capacitor-SL(chip)	470P 50V J				01
C0170	**US064100**	Ceramic Capacitor-B (chip)	0.0100 50V K				01
C0171	**US061330**	Ceramic Capacitor-CH(chip)	33P 50V J				01
C0172	**US061330**	Ceramic Capacitor-CH(chip)	33P 50V J				01
C0179	**UF037100**	Electrolytic Cap. (chip)	10 16V				01
C0180	**UF037100**	Electrolytic Cap. (chip)	10 16V				01
C0181	**US064100**	Ceramic Capacitor-B (chip)	0.0100 50V K				01
C0183	**US064100**	Ceramic Capacitor-B (chip)	0.0100 50V K				01
-0188	**US064100**	Ceramic Capacitor-B (chip)	0.0100 50V K				01
C0191	**US064100**	Ceramic Capacitor-B (chip)	0.0100 50V K				01
-0195	**US064100**	Ceramic Capacitor-B (chip)	0.0100 50V K				01
C0200	**UF037100**	Electrolytic Cap. (chip)	10 16V				01
C0201	**UF037100**	Electrolytic Cap. (chip)	10 16V				01
C0202	**US063100**	Ceramic Capacitor-B (chip)	1000P 50V K				01
C0203	**US063100**	Ceramic Capacitor-B (chip)	1000P 50V K				01
C0204	**US064100**	Ceramic Capacitor-B (chip)	0.0100 50V K				01
-0207	**US064100**	Ceramic Capacitor-B (chip)	0.0100 50V K				01
C0208	**UF037470**	Electrolytic Cap. (chip)	47 16V				01
C0209	**US064100**	Ceramic Capacitor-B (chip)	0.0100 50V K				01
C0211	**UF128470**	Electrolytic Cap. (chip)	470 10V UUR1A4				02
C0212	**UF128470**	Electrolytic Cap. (chip)	470 10V UUR1A4				02
C0213	**US145100**	Ceramic Capacitor-F (chip)	0.1000 25V Z				01
C0214	**US145100**	Ceramic Capacitor-F (chip)	0.1000 25V Z				01
C0303	**US064100**	Ceramic Capacitor-B (chip)	0.0100 50V K				01
C0304	**US064100**	Ceramic Capacitor-B (chip)	0.0100 50V K				01
C0305	**US062470**	Ceramic Capacitor-SL(chip)	470P 50V J				01
C0308	**US064100**	Ceramic Capacitor-B (chip)	0.0100 50V K				01
C0402	**US145100**	Ceramic Capacitor-F (chip)	0.1000 25V Z				01
C0403	**US064100**	Ceramic Capacitor-B (chip)	0.0100 50V K				01
C0405	**US064100**	Ceramic Capacitor-B (chip)	0.0100 50V K				01
C0407	**US062100**	Ceramic Capacitor-SL(chip)	100P 50V J				01
C0408	**US062100**	Ceramic Capacitor-SL(chip)	100P 50V J				01
C0409	**US061560**	Ceramic Capacitor-CH(chip)	56P 50V J				01
-0412	**US061560**	Ceramic Capacitor-CH(chip)	56P 50V J				01
C0413	**US064100**	Ceramic Capacitor-B (chip)	0.0100 50V K				01
C0501	**US064100**	Ceramic Capacitor-B (chip)	0.0100 50V K				01
-0528	**US064100**	Ceramic Capacitor-B (chip)	0.0100 50V K				01
CN001	**VT389000**	Base Post Connector	PH 9P TE				01
CN002	**VT389100**	Base Post Connector	PH 10P TE				01
CN003	**VT388400**	Base Post Connector	PH 3P TE				01
CN004	**VT388600**	Base Post Connector	PH 5P TE				01
CN005	**VT388700**	Base Post Connector	PH 6P TE				01
CN007	**VY939300**	Connector, FFC	52610 14P TE				02
CN008	**VT388500**	Base Post Connector	PH 4P TE				01
CN009	**V9028300**	Connector, FFC/FPC	52808 24P TE				02
CN012	**VT388800**	Base Post Connector	PH 7P TE				
CN013	**VT388800**	Base Post Connector	PH 7P TE				
CN015	**LB918040**	Base Post Connector	XH 4P TE				01
CN016	**VT388500**	Base Post Connector	PH 4P TE				01
CN017	**V6478900**	Connector, FFC/FPC	52808 26P TE				01
D0001	**VS201100**	Diode	D1F60				01
D0002	**WC549600**	Diode	RB160M-30 TR				
D0003	**WC549600**	Diode	RB160M-30 TR				
D0004	**VS201100**	Diode	D1F60				01
D0005	**VT332900**	Diode	1SS355 TE-17				01
-0010	**VT332900**	Diode	1SS355 TE-17				01
DA001	**V9424900**	Diode Array	1SS372 TE85L				01
-004	**V9424900**	Diode Array	1SS372 TE85L				01
IC001	**X0609A00**	IC	LMS8117AMP-ADJ		REGULATOR		03
IC002	**XY568A00**	IC	RN5VD30CA-TR		SYSTEM RESET		02

✻: New Parts

RANK: Japan only

	REF NO.	PART NO.	DESCRIPTION			REMARKS	QTY	RANK
	IC003	**XQ173A00**	IC	TC7W32FU(TE12L)		OR		01
	IC004	**XN883A00**	IC	TC7W14FU		INVERTER		02
	IC005	**XN883A00**	IC	TC7W14FU		INVERTER		02
	IC006	**XY806A00**	IC	TC7WH14FU		INVERTER		02
	IC007	**X2890B00**	IC	HD6417727F160C		CPU		15
	IC008	**XY806A00**	IC	TC7WH14FU		INVERTER		02
	IC009	**X0506A00**	IC	M5233FP-600D		COMPARATOR		02
	IC010	**XN883A00**	IC	TC7W14FU		INVERTER		02
	IC011	**X3123A00**	IC	HD74LV126ATELL		BUFFER		
	IC014	**X3119A00**	IC	LM3525MX-H		USB POWER SWITCH		05
	IC017	**X5154A00**	IC	LT1945EMS#TR		REGULATOR		
	IC018	**XZ610A00**	IC	MBM29LV160BE-70TN		FLASH ROM 16M		12
*	IC018	**X3042B00**	IC	MX29LV160ABTC-70				
	IC019	**X3584A00**	IC	W981216BH-75		SDRAM 128M		11
	IC019	**X3584B00**	IC	W9812G6DH-7				
	IC020	**X3584A00**	IC	W981216BH-75		SDRAM 128M		11
	IC020	**X3584B00**	IC	W9812G6DH-7				
*	IC021	**X4893E00**	IC	MBM29PL12LM10PCN-K		FLASH ROM 128M MAIN		
*	IC022	**X4894100**	IC	MR27V12800		P2ROM DATA		
	IC023	**XW148A00**	IC	HD74LVC245ATELL		TRANSCEIVER		02
	-026	**XW148A00**	IC	HD74LVC245ATELL		TRANSCEIVER		02
	IC027	**X0010A00**	IC	HD74LV21ATELL		AND		01
	IC030	**XW148A00**	IC	HD74LVC245ATELL		TRANSCEIVER		02
	IC031	**XW148A00**	IC	HD74LVC245ATELL		TRANSCEIVER		02
	IC032	**XZ495A00**	IC	TC74VHC138FT		DECODER		01
	IC033	**XV893A00**	IC	TC74VHC139FT		DECODER		02
	IC034	**XZ414B00**	IC	W986416DH-7		SDRAM 64M		08
	IC034	**X2760A00**	IC	K4S641632F-TC75				10
	IC034	**X2760B00**	IC	K4S641632H-TC75				
	IC035	**X0060A00**	IC	T8F02TB-0102		SWP50		15
	IC036	**X0609A00**	IC	LMS8117AMP-ADJ		REGULATOR		03
	IC039	**X5189A00**	IC	SN74LV174APWR		D-FF		
	IC041	**XQ173A00**	IC	TC7W32FU(TE12L)		OR		01
*	IC042	**X4895100**	IC	MX23L12810		MASK ROM 128M WAVE-1L		
*	IC043	**X4896100**	IC	MX23L12810		MASK ROM 128M WAVE-1H		
	IC044	**XY945A00**	IC	TC74VHC32FT		OR		01
	IC045	**X2689A00**	IC	HD74LV273ATELL		D-FF		01
	IC046	**XW744A00**	IC	HD74LV245ATELL		TRANSCEIVER		02
	IC047	**XW744A00**	IC	HD74LV245ATELL		TRANSCEIVER		02
	IC048	**XY945A00**	IC	TC74VHC32FT		OR		01
	IC049	**XV890A00**	IC	TC74VHC14FT		INVERTER		02
	IC052	**X4887100**	IC	MX23L6410		MASK ROM 64M WAVE-2L		
	IC053	**X4888100**	IC	MX23L6410		MASK ROM 64M WAVE-2H		
	IC055	**XW148A00**	IC	HD74LVC245ATELL		TRANSCEIVER		02
	L0001	**VR579900**	Chip Inductance	BK2125HS601-T				01
	L0002	**WC539600**	Chip Inductance	22U LQH43CN220K03L				
	L0003	**V2747000**	Chip Inductance	BLM18PG600SN1				
	-0009	**V2747000**	Chip Inductance	BLM18PG600SN1				
	L0101	**VY657200**	Chip Inductance	600 BK1608HM601				01
	-0112	**VY657200**	Chip Inductance	600 BK1608HM601				01
	L0200	**VY657200**	Chip Inductance	600 BK1608HM601				01
	-0207	**VY657200**	Chip Inductance	600 BK1608HM601				01
	L0211	**VY657200**	Chip Inductance	600 BK1608HM601				01
	R0002	**RD357470**	Carbon Resistor (chip)	47.0K 63M J				01
	R0005	**RD357470**	Carbon Resistor (chip)	47.0K 63M J				01
	R0008	**RF355560**	Carbon Resistor (chip)	560.0 D 1608				01
	R0008	**RF455560**	Carbon Resistor (chip)	560.0 D				
	R0009	**RF355220**	Carbon Resistor (chip)	220.0 D 1608				01
	R0009	**RF455220**	Carbon Resistor (chip)	220.0 D				
	R0010	**RF354820**	Carbon Resistor (chip)	82.0 D 1608				01
	R0010	**RF454820**	Carbon Resistor (chip)	82.0 D				01
	R0014	**RD356100**	Carbon Resistor (chip)	1.0K 63M J				01
	R0015	**RD358100**	Carbon Resistor (chip)	100.0K 63M J				01
	R0016	**RD355220**	Carbon Resistor (chip)	220.0 63M J				01
	R0017	**RD355220**	Carbon Resistor (chip)	220.0 63M J				01
	R0018	**RD356470**	Carbon Resistor (chip)	4.7K 63M J				01
	R0020	**RD356100**	Carbon Resistor (chip)	1.0K 63M J				01
	R0021	**RD358470**	Carbon Resistor (chip)	470.0K 63M J				01
	R0025	**RD356100**	Carbon Resistor (chip)	1.0K 63M J				01
	R0026	**RD356100**	Carbon Resistor (chip)	1.0K 63M J				01

*: New Parts

RANK: Japan only

REF NO.	PART NO.	DESCRIPTION			REMARKS	QTY	RANK
R0027	**RD357100**	Carbon Resistor (chip)	10.0K 63M J				01
R0029	**RD358470**	Carbon Resistor (chip)	470.0K 63M J				01
R0030	**RD357100**	Carbon Resistor (chip)	10.0K 63M J				01
R0031	**RD356100**	Carbon Resistor (chip)	1.0K 63M J				01
-0034	**RD356100**	Carbon Resistor (chip)	1.0K 63M J				01
R0035	**RD357100**	Carbon Resistor (chip)	10.0K 63M J				01
R0036	**RD355220**	Carbon Resistor (chip)	220.0 63M J				01
R0041	**RD354330**	Carbon Resistor (chip)	33.0 63M J				01
R0042	**RD358470**	Carbon Resistor (chip)	470.0K 63M J				01
R0043	**RD357100**	Carbon Resistor (chip)	10.0K 63M J				01
R0044	**RD355270**	Carbon Resistor (chip)	270.0 63M J				01
-0047	**RD355270**	Carbon Resistor (chip)	270.0 63M J				01
R0048	**RD356100**	Carbon Resistor (chip)	1.0K 63M J				01
R0049	**RD357100**	Carbon Resistor (chip)	10.0K 63M J				01
R0050	**RD356270**	Carbon Resistor (chip)	2.7K 63M J				01
R0051	**RD358470**	Carbon Resistor (chip)	470.0K 63M J				01
R0052	**RD357100**	Carbon Resistor (chip)	10.0K 63M J				01
-0054	**RD357100**	Carbon Resistor (chip)	10.0K 63M J				01
R0055	**RD354680**	Carbon Resistor (chip)	68.0 63M J				01
R0056	**RD357100**	Carbon Resistor (chip)	10.0K 63M J				01
R0057	**RD354680**	Carbon Resistor (chip)	68.0 63M J				01
R0059	**RD357470**	Carbon Resistor (chip)	47.0K 63M J				01
R0060	**RD354680**	Carbon Resistor (chip)	68.0 63M J				01
R0061	**RD357470**	Carbon Resistor (chip)	47.0K 63M J				01
R0062	**RD354680**	Carbon Resistor (chip)	68.0 63M J				01
R0063	**RD357470**	Carbon Resistor (chip)	47.0K 63M J				01
R0064	**RD357220**	Carbon Resistor (chip)	22.0K 63M J				01
R0065	**RD354680**	Carbon Resistor (chip)	68.0 63M J				01
R0066	**RD357470**	Carbon Resistor (chip)	47.0K 63M J				01
R0067	**RD354680**	Carbon Resistor (chip)	68.0 63M J				01
R0068	**RD357470**	Carbon Resistor (chip)	47.0K 63M J				01
R0069	**RD357100**	Carbon Resistor (chip)	10.0K 63M J				01
R0070	**RD354680**	Carbon Resistor (chip)	68.0 63M J				01
R0071	**RD357100**	Carbon Resistor (chip)	10.0K 63M J				01
R0072	**RD357220**	Carbon Resistor (chip)	22.0K 63M J				01
R0073	**RD357470**	Carbon Resistor (chip)	47.0K 63M J				01
R0074	**RD354680**	Carbon Resistor (chip)	68.0 63M J				01
R0075	**RD357220**	Carbon Resistor (chip)	22.0K 63M J				01
R0076	**RD357470**	Carbon Resistor (chip)	47.0K 63M J				01
R0077	**RD357220**	Carbon Resistor (chip)	22.0K 63M J				01
R0078	**RD354680**	Carbon Resistor (chip)	68.0 63M J				01
R0079	**RD357470**	Carbon Resistor (chip)	47.0K 63M J				01
R0080	**RD357220**	Carbon Resistor (chip)	22.0K 63M J				01
R0081	**RD357470**	Carbon Resistor (chip)	47.0K 63M J				01
R0082	**RD357470**	Carbon Resistor (chip)	47.0K 63M J				01
R0083	**RD354680**	Carbon Resistor (chip)	68.0 63M J				01
R0084	**RD357470**	Carbon Resistor (chip)	47.0K 63M J				01
R0085	**RD354680**	Carbon Resistor (chip)	68.0 63M J				01
R0087	**RD354330**	Carbon Resistor (chip)	33.0 63M J				01
R0088	**RD355270**	Carbon Resistor (chip)	270.0 63M J				01
R0089	**RD357100**	Carbon Resistor (chip)	10.0K 63M J				01
R0090	**RD358100**	Carbon Resistor (chip)	100.0K 63M J				01
R0091	**RD357220**	Carbon Resistor (chip)	22.0K 63M J				01
R0092	**RD357220**	Carbon Resistor (chip)	22.0K 63M J				01
R0093	**RD357100**	Carbon Resistor (chip)	10.0K 63M J				01
R0095	**RD357220**	Carbon Resistor (chip)	22.0K 63M J				01
R0101	**RD355330**	Carbon Resistor (chip)	330.0 63M J				01
R0102	**RD355270**	Carbon Resistor (chip)	270.0 63M J				01
R0103	**RD355270**	Carbon Resistor (chip)	270.0 63M J				01
R0105	**RD355270**	Carbon Resistor (chip)	270.0 63M J				01
R0107	**RD354680**	Carbon Resistor (chip)	68.0 63M J				01
-0110	**RD354680**	Carbon Resistor (chip)	68.0 63M J				01
R0111	**RD154270**	Carbon Resistor (chip)	27.0 1/4 J				01
R0112	**RD154270**	Carbon Resistor (chip)	27.0 1/4 J				01
R0113	**RD358100**	Carbon Resistor (chip)	100.0K 63M J				01
R0114	**RD358100**	Carbon Resistor (chip)	100.0K 63M J				01
R0115	**RD154270**	Carbon Resistor (chip)	27.0 1/4 J				01
R0116	**RD154270**	Carbon Resistor (chip)	27.0 1/4 J				01
R0117	**RD357150**	Carbon Resistor (chip)	15.0K 63M J				01
R0118	**RD357100**	Carbon Resistor (chip)	10.0K 63M J				01

✻: New Parts

RANK: Japan only

REF NO.	PART NO.	DESCRIPTION			REMARKS	QTY	RANK
R0119	**RD357150**	Carbon Resistor (chip)	15.0K 63M J				01
R0120	**RD356150**	Carbon Resistor (chip)	1.5K 63M J				01
R0122	**RD356150**	Carbon Resistor (chip)	1.5K 63M J				01
R0125	**RD357100**	Carbon Resistor (chip)	10.0K 63M J				01
R0127	**RD357100**	Carbon Resistor (chip)	10.0K 63M J				01
R0128	**RD357100**	Carbon Resistor (chip)	10.0K 63M J				01
R0130	**RD357100**	Carbon Resistor (chip)	10.0K 63M J				01
-0134	**RD357100**	Carbon Resistor (chip)	10.0K 63M J				01
R0139	**VY657200**	Chip Inductance	600 BK1608HM601				01
-0146	**VY657200**	Chip Inductance	600 BK1608HM601				01
R0148	**RF458330**	Carbon Resistor (chip)	330.0K D				
R0150	**RD355470**	Carbon Resistor (chip)	470.0 63M J				01
R0152	**RF356120**	Carbon Resistor (chip)	1.2K D 1608				01
R0152	**RF456120**	Carbon Resistor (chip)	1.2K D 1608				
R0158	**RD350000**	Carbon Resistor (chip)	0 63M J				01
R0159	**RD355100**	Carbon Resistor (chip)	100.0 63M J				01
R0160	**RD354680**	Carbon Resistor (chip)	68.0 63M J				01
-0165	**RD354680**	Carbon Resistor (chip)	68.0 63M J				01
R0167	**RD354680**	Carbon Resistor (chip)	68.0 63M J				01
R0169	**RD354470**	Carbon Resistor (chip)	47.0 63M J				01
R0170	**RD355100**	Carbon Resistor (chip)	100.0 63M J				01
R0173	**RD354470**	Carbon Resistor (chip)	47.0 63M J				01
-0178	**RD354470**	Carbon Resistor (chip)	47.0 63M J				01
R0179	**RF355270**	Carbon Resistor (chip)	270.0 D 1608				01
R0179	**RF455270**	Carbon Resistor (chip)	270.0 D				01
R0180	**RF354270**	Carbon Resistor (chip)	27.0 D 1608				01
R0180	**RF454270**	Carbon Resistor (chip)	27.0 D				01
R0181	**RF355270**	Carbon Resistor (chip)	270.0 D 1608				01
R0181	**RF455270**	Carbon Resistor (chip)	270.0 D				01
R0182	**RD356100**	Carbon Resistor (chip)	1.0K 63M J				01
R0183	**RD355220**	Carbon Resistor (chip)	220.0 63M J				01
R0184	**RD357100**	Carbon Resistor (chip)	10.0K 63M J				01
R0185	**RD359100**	Carbon Resistor (chip)	1.0M 63M J				01
R0186	**RD355560**	Carbon Resistor (chip)	560.0 63M J				01
R0187	**RD355560**	Carbon Resistor (chip)	560.0 63M J				01
R0188	**RD354680**	Carbon Resistor (chip)	68.0 63M J				01
-0191	**RD354680**	Carbon Resistor (chip)	68.0 63M J				01
R0192	**RD357100**	Carbon Resistor (chip)	10.0K 63M J				01
R0193	**RD355560**	Carbon Resistor (chip)	560.0 63M J				01
R0194	**RD355270**	Carbon Resistor (chip)	270.0 63M J				01
R0195	**RD355560**	Carbon Resistor (chip)	560.0 63M J				01
R0196	**RD355560**	Carbon Resistor (chip)	560.0 63M J				01
R0197	**RD354680**	Carbon Resistor (chip)	68.0 63M J				01
-0206	**RD354680**	Carbon Resistor (chip)	68.0 63M J				01
R0207	**RD355560**	Carbon Resistor (chip)	560.0 63M J				01
R0208	**RD354680**	Carbon Resistor (chip)	68.0 63M J				01
R0213	**RD355100**	Carbon Resistor (chip)	100.0 63M J				01
R0217	**RD355100**	Carbon Resistor (chip)	100.0 63M J				01
R0218	**RD354470**	Carbon Resistor (chip)	47.0 63M J				01
-0223	**RD354470**	Carbon Resistor (chip)	47.0 63M J				01
R0228	**RD358470**	Carbon Resistor (chip)	470.0K 63M J				01
R0229	**RD355100**	Carbon Resistor (chip)	100.0 63M J				01
R0230	**RD358470**	Carbon Resistor (chip)	470.0K 63M J				01
R0231	**RD358470**	Carbon Resistor (chip)	470.0K 63M J				01
R0232	**RD357100**	Carbon Resistor (chip)	10.0K 63M J				01
R0233	**RD357100**	Carbon Resistor (chip)	10.0K 63M J				01
R0234	**RD356100**	Carbon Resistor (chip)	1.0K 63M J				01
R0235	**RD357100**	Carbon Resistor (chip)	10.0K 63M J				01
-0238	**RD357100**	Carbon Resistor (chip)	10.0K 63M J				01
R0239	**RD358100**	Carbon Resistor (chip)	100.0K 63M J				01
R0240	**RD356470**	Carbon Resistor (chip)	4.7K 63M J				01
R0241	**RD357100**	Carbon Resistor (chip)	10.0K 63M J				01
R0242	**RD355470**	Carbon Resistor (chip)	470.0 63M J				01
R0243	**RD358100**	Carbon Resistor (chip)	100.0K 63M J				01
R0244	**RD356100**	Carbon Resistor (chip)	1.0K 63M J				01
R0245	**RD356100**	Carbon Resistor (chip)	1.0K 63M J				01
R0246	**RD357100**	Carbon Resistor (chip)	10.0K 63M J				01
R0300	**RD357100**	Carbon Resistor (chip)	10.0K 63M J				01
R0302	**RD357100**	Carbon Resistor (chip)	10.0K 63M J				01
-0304	**RD357100**	Carbon Resistor (chip)	10.0K 63M J				01

✻: New Parts

RANK: Japan only

REF NO.	PART NO.	DESCRIPTION			REMARKS	QTY	RANK
R0306	**RD357220**	Carbon Resistor (chip)	22.0K 63M J				01
R0308	**RD357100**	Carbon Resistor (chip)	10.0K 63M J				01
R0309	**RD357100**	Carbon Resistor (chip)	10.0K 63M J				01
R0311	**RD357100**	Carbon Resistor (chip)	10.0K 63M J				01
R0322	**RD350000**	Carbon Resistor (chip)	0 63M J				01
R0324	**RD357100**	Carbon Resistor (chip)	10.0K 63M J				01
R0328	**RD350000**	Carbon Resistor (chip)	0 63M J				01
R0338	**RD350000**	Carbon Resistor (chip)	0 63M J				01
R0343	**RD350000**	Carbon Resistor (chip)	0 63M J				01
R0344	**RD350000**	Carbon Resistor (chip)	0 63M J				01
R0345	**RD355560**	Carbon Resistor (chip)	560.0 63M J				01
R0346	**RD355100**	Carbon Resistor (chip)	100.0 63M J				01
R0347	**RD355100**	Carbon Resistor (chip)	100.0 63M J				01
R0348	**RD355270**	Carbon Resistor (chip)	270.0 63M J				01
R0349	**RD355270**	Carbon Resistor (chip)	270.0 63M J				01
R0400	**RD350000**	Carbon Resistor (chip)	0 63M J				01
-0405	**RD350000**	Carbon Resistor (chip)	0 63M J				01
R0902	**RD350000**	Carbon Resistor (chip)	0 63M J				01
R0904	**RD350000**	Carbon Resistor (chip)	0 63M J				01
R0906	**RD350000**	Carbon Resistor (chip)	0 63M J				01
R0907	**RD350000**	Carbon Resistor (chip)	0 63M J				01
R0910	**RD350000**	Carbon Resistor (chip)	0 63M J				01
R0913	**RD350000**	Carbon Resistor (chip)	0 63M J				01
R0915	**RD350000**	Carbon Resistor (chip)	0 63M J				01
R0917	**RF357180**	Carbon Resistor (chip)	18.0K D 1608		}		
R0917	**RF457180**	Carbon Resistor (chip)	18.0K D		}		
RA009	**RE044680**	Resistor Array	68X4				01
-016	**RE044680**	Resistor Array	68X4				01
RA017	**RE044470**	Resistor Array	47X4				01
-030	**RE044470**	Resistor Array	47X4				01
RA031	**RE047470**	Resistor Array	47KX4				01
-040	**RE047470**	Resistor Array	47KX4				01
RA041	**RE044470**	Resistor Array	47X4				01
-048	**RE044470**	Resistor Array	47X4				01
RA049	**RE047100**	Resistor Array	10KX4				01
-052	**RE047100**	Resistor Array	10KX4				01
RA053	**RE044680**	Resistor Array	68X4				01
RA054	**RE044680**	Resistor Array	68X4				01
RA055	**RE047100**	Resistor Array	10KX4				01
RA056	**RE044680**	Resistor Array	68X4				01
RA057	**RE044680**	Resistor Array	68X4				01
RA058	**RE047100**	Resistor Array	10KX4				01
RA059	**RE044680**	Resistor Array	68X4				01
-062	**RE044680**	Resistor Array	68X4				01
RA063	**RE044470**	Resistor Array	47X4				01
RA064	**RE044470**	Resistor Array	47X4				01
RA065	**RE047100**	Resistor Array	10KX4				01
-067	**RE047100**	Resistor Array	10KX4				01
RA068	**RE045220**	Resistor Array	220X4				01
RA300	**RE044680**	Resistor Array	68X4				01
-303	**RE044680**	Resistor Array	68X4				01
SW003	**V3026900**	Jumper Switch	CHS-01 TA1		Destination Select		02
TR002	**VV556400**	Transistor	2SC2412K Q,R,S				01
TR004	**V2569000**	Transistor	2SB766A				01
TR005	**VJ927100**	Transistor	2SC2712 Y				01
X0001	**V9704700**	Quartz Crystal Unit	48MHz SG-710ECK		}		
X0001	**WA244900**	Quartz Crystal Unit	48.000MHz DSO751SV		}		04
X0002	**VP864900**	Quartz Crystal Unit	16MHz SMD-49				04
X0003	**VP864800**	Quartz Crystal Unit	11.2896MHz SMD-49				04
*	**WB942700**	Circuit Board	PNR(ENC,PNR1,PNR2)		(X4531C0)		
	--	Circuit Board	ENC		(WB94270,WB94330,X4531C0)		
	--	Circuit Board	PNR1		(WB94270,WB94280,X4531C0)		
	--	Circuit Board	PNR2		(WB94270,WB94290,X4531C0)		
	--	Jumper Wire	0.55		(VA07890)		
CN101	**VB858500**	Connector Base Post	PH 6P SE				01
CN102	**VB858800**	Connector Base Post	PH 9P SE				01
CN105	**VI878100**	Cable Holder	51048 3P TE				01
CN107	**VB389600**	Connector Base Post	PH 11P SE				01
CN109	**VI878100**	Cable Holder	51048 3P TE				01

✻: New Parts

RANK: Japan only

	REF NO.	PART NO.	DESCRIPTION			REMARKS	QTY	RANK
	D0000	**VD631600**	Diode	1SS133,176,HSS104				01
	-0029	**VD631600**	Diode	1SS133,176,HSS104				01
	D0140	**VD631600**	Diode	1SS133,176,HSS104				01
	-0143	**VD631600**	Diode	1SS133,176,HSS104				01
	D0153	**VD631600**	Diode	1SS133,176,HSS104				01
	-0160	**VD631600**	Diode	1SS133,176,HSS104				01
	D0162	**VD631600**	Diode	1SS133,176,HSS104				01
	-0169	**VD631600**	Diode	1SS133,176,HSS104				01
	D0200	**VD631600**	Diode	1SS133,176,HSS104				01
	D0201	**VD631600**	Diode	1SS133,176,HSS104				01
	EC100	**VU481300**	Encoder	REB161 PVB 15F		DATA ENTRY		03
	LD000	**WB947500**	LED Red	SLZ-9G81B-34-T1		PART(PART SELECT RIGHT2)		
	LD001	**WB947500**	LED Red	SLZ-9G81B-34-T1		PART(PART SELECT RIGHT1)		
	LD002	**WB947500**	LED Red	SLZ-9G81B-34-T1		PART(PART SELECT LEFT)		
	LD003	**WB947500**	LED Red	SLZ-9G81B-34-T1		VOICE(USER)		
	LD004	**WB947500**	LED Red	SLZ-9G81B-34-T1		VOICE(PERCUSSION & DRUM KIT)		
	LD005	**WB947500**	LED Red	SLZ-9G81B-34-T1		VOICE(SYNTH. & FX)		
	LD006	**WB947500**	LED Red	SLZ-9G81B-34-T1		VOICE(CHOIR & PAD)		
	LD007	**WB947500**	LED Red	SLZ-9G81B-34-T1		VOICE(ACCORDION & HARMONICA)		
	LD008	**WB947500**	LED Red	SLZ-9G81B-34-T1		VOICE(BRASS)		
	LD009	**WB947500**	LED Red	SLZ-9G81B-34-T1		VOICE(TRUMPET)		
*	LD010	**WC355100**	LED Yellow	SEL2710Y TP21		KEYBOARD GUIDE LAMP		
*	LD011	**WC355100**	LED Yellow	SEL2710Y TP21		KEYBOARD GUIDE LAMP		
*	LD012	**WC355100**	LED Yellow	SEL2710Y TP21		KEYBOARD GUIDE LAMP		
	LD014	**VG197600**	LED Green/Red	GL3ED8		REGISTRATION MEMORY(3)		01
	LD015	**VG197600**	LED Green/Red	GL3ED8		REGISTRATION MEMORY(1)		01
*	LD016	**WC355100**	LED Yellow	SEL2710Y TP21		KEYBOARD GUIDE LAMP		
*	LD017	**WC355100**	LED Yellow	SEL2710Y TP21		KEYBOARD GUIDE LAMP		
*	LD018	**WC355100**	LED Yellow	SEL2710Y TP21		KEYBOARD GUIDE LAMP		
*	LD019	**WC355100**	LED Yellow	SEL2710Y TP21		KEYBOARD GUIDE LAMP		
*	LD020	**WC355000**	LED Red	SEL2210R TP21		KEYBOARD GUIDE LAMP		
	LD022	**WB947500**	LED Red	SLZ-9G81B-34-T1		VOICE(ORGAN FLUTES)		
	LD023	**WB947500**	LED Red	SLZ-9G81B-34-T1		VOICE(ORGAN)		
	LD024	**WB947500**	LED Red	SLZ-9G81B-34-T1		VOICE(FLUTE& WOODWIND)		
	LD025	**WB947500**	LED Red	SLZ-9G81B-34-T1		VOICE(SAXOPHONE)		
	LD026	**WB947500**	LED Red	SLZ-9G81B-34-T1		VOICE(GUITAR & BASS)		
	LD027	**WB947500**	LED Red	SLZ-9G81B-34-T1		VOICE(STRINGS)		
	LD028	**WB947500**	LED Red	SLZ-9G81B-34-T1		VOICE(E.PIANO)		
	LD029	**WB947500**	LED Red	SLZ-9G81B-34-T1		VOICE(PIANO)		
*	LD030	**WC355100**	LED Yellow	SEL2710Y TP21		KEYBOARD GUIDE LAMP		
*	LD031	**WC355100**	LED Yellow	SEL2710Y TP21		KEYBOARD GUIDE LAMP		
*	LD032	**WC355100**	LED Yellow	SEL2710Y TP21		KEYBOARD GUIDE LAMP		
*	LD033	**WC355100**	LED Yellow	SEL2710Y TP21		KEYBOARD GUIDE LAMP		
*	LD034	**WC355100**	LED Yellow	SEL2710Y TP21		KEYBOARD GUIDE LAMP		
*	LD035	**WC355100**	LED Yellow	SEL2710Y TP21		KEYBOARD GUIDE LAMP		
*	LD036	**WC355100**	LED Yellow	SEL2710Y TP21		KEYBOARD GUIDE LAMP		
*	LD037	**WC355100**	LED Yellow	SEL2710Y TP21		KEYBOARD GUIDE LAMP		
*	LD090	**WC355000**	LED Red	SEL2210R TP21		KEYBOARD GUIDE LAMP		
*	LD091	**WC355000**	LED Red	SEL2210R TP21		KEYBOARD GUIDE LAMP		
*	LD092	**WC355000**	LED Red	SEL2210R TP21		KEYBOARD GUIDE LAMP		
*	LD093	**WC355000**	LED Red	SEL2210R TP21		KEYBOARD GUIDE LAMP		
*	LD094	**WC355000**	LED Red	SEL2210R TP21		KEYBOARD GUIDE LAMP		
*	LD095	**WC355000**	LED Red	SEL2210R TP21		KEYBOARD GUIDE LAMP		
*	LD096	**WC355000**	LED Red	SEL2210R TP21		KEYBOARD GUIDE LAMP		
*	LD097	**WC355000**	LED Red	SEL2210R TP21		KEYBOARD GUIDE LAMP		
*	LD098	**WC355000**	LED Red	SEL2210R TP21		KEYBOARD GUIDE LAMP		
*	LD099	**WC355000**	LED Red	SEL2210R TP21		KEYBOARD GUIDE LAMP		
*	LD100	**WC355000**	LED Red	SEL2210R TP21		KEYBOARD GUIDE LAMP		
*	LD101	**WC355000**	LED Red	SEL2210R TP21		KEYBOARD GUIDE LAMP		
*	LD102	**WC355000**	LED Red	SEL2210R TP21		KEYBOARD GUIDE LAMP		
*	LD103	**WC355000**	LED Red	SEL2210R TP21		KEYBOARD GUIDE LAMP		
*	LD104	**WC355000**	LED Red	SEL2210R TP21		KEYBOARD GUIDE LAMP		
*	LD105	**WC355000**	LED Red	SEL2210R TP21		KEYBOARD GUIDE LAMP		
*	LD106	**WC355000**	LED Red	SEL2210R TP21		KEYBOARD GUIDE LAMP		
*	LD107	**WC355000**	LED Red	SEL2210R TP21		KEYBOARD GUIDE LAMP		
*	LD108	**WC355000**	LED Red	SEL2210R TP21		KEYBOARD GUIDE LAMP		
*	LD109	**WC355000**	LED Red	SEL2210R TP21		KEYBOARD GUIDE LAMP		
	LD110	**VG197600**	LED Green/Red	GL3ED8		REGISTRATION MEMORY(8)		01

*: New Parts

RANK: Japan only

REF NO.	PART NO.	DESCRIPTION			REMARKS	QTY	RANK
LD111	**VG197600**	LED Green/Red	GL3ED8		REGISTRATION MEMORY(7)		01
LD112	**VG197600**	LED Green/Red	GL3ED8		REGISTRATION MEMORY(6)		01
LD113	**VG197600**	LED Green/Red	GL3ED8		REGISTRATION MEMORY(5)		01
LD114	**VG197600**	LED Green/Red	GL3ED8		REGISTRATION MEMORY(4)		01
LD115	**VG197600**	LED Green/Red	GL3ED8		REGISTRATION MEMORY(2)		01
LD116	**VG197600**	LED Green/Red	GL3ED8		ONE TOUCH SETTING(4)		01
LD117	**VG197600**	LED Green/Red	GL3ED8		ONE TOUCH SETTING(3)		01
LD118	**VG197600**	LED Green/Red	GL3ED8		ONE TOUCH SETTING(2)		01
LD119	**VG197600**	LED Green/Red	GL3ED8		ONE TOUCH SETTING(1)		01
LD130	**WB947500**	LED Red	SLZ-9G81B-34-T1		PART(PART ON/OFF RIGHT2)		
LD131	**WB947500**	LED Red	SLZ-9G81B-34-T1		PART(PART ON/OFF RIGHT1)		
LD132	**WB947500**	LED Red	SLZ-9G81B-34-T1		PART(PART ON/OFF LEFT)		
LD133	**WB947500**	LED Red	SLZ-9G81B-34-T1		LEFT HOLD		
LD138	**WB947500**	LED Red	SLZ-9G81B-34-T1		REGISTRATION MEMORY (FREEZE)		
LD139	**WB947500**	LED Red	SLZ-9G81B-34-T1		PIANO SETTING(PIANO)		
LDHOL	**WC176600**	LED Spacer	L=9.0			12	
R0100	**HF454560**	Carbon Resistor	56.0 1/4 J				01
R0100	**HF754560**	Carbon Resistor	56.0 1/4 J				01
R0101	**HF455180**	Carbon Resistor	180.0 1/4 J				01
R0101	**HF755180**	Carbon Resistor	180.0 1/4 J				01
R0102	**HF455120**	Carbon Resistor	120.0 1/4 J				01
R0102	**HF755120**	Carbon Resistor	120.0 1/4 J				01
R0900	**--**	Jumper Wire	0.55		(VA07890)		
-0908	**--**	Jumper Wire	0.55		(VA07890)		
SW000	**VV439800**	Tact Switch	SKQNAJ		PART(PART SELECT RIGHT2)		01
SW000	**V8889300**	Push Switch	EVQ 11Y 07K				01
SW001	**VV439800**	Tact Switch	SKQNAJ		PART(PART SELECT RIGHT1)		01
SW001	**V8889300**	Push Switch	EVQ 11Y 07K				01
SW002	**VV439800**	Tact Switch	SKQNAJ		PART(PART SELECT LEFT)		01
SW002	**V8889300**	Push Switch	EVQ 11Y 07K				01
SW003	**VV439800**	Tact Switch	SKQNAJ		REGISTRATION MEMORY		01
SW003	**V8889300**	Push Switch	EVQ 11Y 07K		(MEMORY)		01
SW004	**VV439800**	Tact Switch	SKQNAJ		REGISTRATION MEMORY(3)		01
SW004	**V8889300**	Push Switch	EVQ 11Y 07K				01
SW005	**VV439800**	Tact Switch	SKQNAJ		REGISTRATION MEMORY(1)		01
SW005	**V8889300**	Push Switch	EVQ 11Y 07K				01
SW006	**VV439800**	Tact Switch	SKQNAJ		ONE TOUCH SETTING(4)		01
SW006	**V8889300**	Push Switch	EVQ 11Y 07K				01
SW007	**VV439800**	Tact Switch	SKQNAJ		ONE TOUCH SETTING(3)		01
SW007	**V8889300**	Push Switch	EVQ 11Y 07K				01
SW008	**VV439800**	Tact Switch	SKQNAJ		ONE TOUCH SETTING(2)		01
SW008	**V8889300**	Push Switch	EVQ 11Y 07K				01
SW009	**VV439800**	Tact Switch	SKQNAJ		ONE TOUCH SETTING(1)		01
SW009	**V8889300**	Push Switch	EVQ 11Y 07K				01
SW010	**VV439800**	Tact Switch	SKQNAJ		REGISTRATION MEMORY(8)		01
SW010	**V8889300**	Push Switch	EVQ 11Y 07K				01
SW011	**VV439800**	Tact Switch	SKQNAJ		REGISTRATION MEMORY(7)		01
SW011	**V8889300**	Push Switch	EVQ 11Y 07K				01
SW012	**VV439800**	Tact Switch	SKQNAJ		REGISTRATION MEMORY(6)		01
SW012	**V8889300**	Push Switch	EVQ 11Y 07K				01
SW013	**VV439800**	Tact Switch	SKQNAJ		REGISTRATION MEMORY(5)		01
SW013	**V8889300**	Push Switch	EVQ 11Y 07K				01
SW014	**VV439800**	Tact Switch	SKQNAJ		REGISTRATION MEMORY(4)		01
SW014	**V8889300**	Push Switch	EVQ 11Y 07K				01
SW015	**VV439800**	Tact Switch	SKQNAJ		REGISTRATION MEMORY(2)		01
SW015	**V8889300**	Push Switch	EVQ 11Y 07K				01
SW016	**VV439800**	Tact Switch	SKQNAJ		REGISTRATION MEMORY		01
SW016	**V8889300**	Push Switch	EVQ 11Y 07K		(REGIST.BANK)		01
SW017	**VV439800**	Tact Switch	SKQNAJ		ENTER		01
SW017	**V8889300**	Push Switch	EVQ 11Y 07K				01
SW018	**VV439800**	Tact Switch	SKQNAJ		MUSIC FINDER		01
SW018	**V8889300**	Push Switch	EVQ 11Y 07K				01
SW019	**VV439800**	Tact Switch	SKQNAJ		DEMO		01
SW019	**V8889300**	Push Switch	EVQ 11Y 07K				01
SW020	**VV439800**	Tact Switch	SKQNAJ		TAB(LEFT)		01
SW020	**V8889300**	Push Switch	EVQ 11Y 07K				01
SW021	**VV439800**	Tact Switch	SKQNAJ		TAB(RIGHT)		01
SW021	**V8889300**	Push Switch	EVQ 11Y 07K				01
SW022	**VV439800**	Tact Switch	SKQNAJ		F button		01

✻: New Parts

RANK: Japan only

REF NO.	PART NO.	DESCRIPTION			REMARKS	QTY	RANK
SW022	**V8889300**	Push Switch	EVQ 11Y 07K				01
SW023	**VV439800**	Tact Switch	SKQNAJ		G button		01
SW023	**V8889300**	Push Switch	EVQ 11Y 07K				01
SW024	**VV439800**	Tact Switch	SKQNAJ		H button		01
SW024	**V8889300**	Push Switch	EVQ 11Y 07K				01
SW025	**VV439800**	Tact Switch	SKQNAJ		I button		01
SW025	**V8889300**	Push Switch	EVQ 11Y 07K				01
SW026	**VV439800**	Tact Switch	SKQNAJ		J button		01
SW026	**V8889300**	Push Switch	EVQ 11Y 07K				01
SW027	**VV439800**	Tact Switch	SKQNAJ		EXIT		01
SW027	**V8889300**	Push Switch	EVQ 11Y 07K				01
SW028	**VV439800**	Tact Switch	SKQNAJ		REGISTRATION MEMORY		01
SW028	**V8889300**	Push Switch	EVQ 11Y 07K		(FREEZE)		01
SW029	**VV439800**	Tact Switch	SKQNAJ		PIANO SETTING(PIANO)		01
SW029	**V8889300**	Push Switch	EVQ 11Y 07K				01
SW140	**VV439800**	Tact Switch	SKQNAJ		PART(PART ON/OFF RIGHT2)		01
SW140	**V8889300**	Push Switch	EVQ 11Y 07K				01
SW141	**VV439800**	Tact Switch	SKQNAJ		PART(PART ON/OFF RIGHT1)		01
SW141	**V8889300**	Push Switch	EVQ 11Y 07K				01
SW142	**VV439800**	Tact Switch	SKQNAJ		PART(PART ON/OFF LEFT)		01
SW142	**V8889300**	Push Switch	EVQ 11Y 07K				01
SW143	**VV439800**	Tact Switch	SKQNAJ		LEFT HOLD		01
SW143	**V8889300**	Push Switch	EVQ 11Y 07K				01
SW153	**VV439800**	Tact Switch	SKQNAJ		VOICE(USER)		01
SW153	**V8889300**	Push Switch	EVQ 11Y 07K				01
SW154	**VV439800**	Tact Switch	SKQNAJ		VOICE(PERCUSSION &		01
SW154	**V8889300**	Push Switch	EVQ 11Y 07K		DRUM KIT)		01
SW155	**VV439800**	Tact Switch	SKQNAJ		VOICE(SYNTH. & FX)		01
SW155	**V8889300**	Push Switch	EVQ 11Y 07K				01
SW156	**VV439800**	Tact Switch	SKQNAJ		VOICE(CHOIR & PAD)		01
SW156	**V8889300**	Push Switch	EVQ 11Y 07K				01
SW157	**VV439800**	Tact Switch	SKQNAJ		VOICE(ACCORDION &		01
SW157	**V8889300**	Push Switch	EVQ 11Y 07K		HARMONICA)		01
SW158	**VV439800**	Tact Switch	SKQNAJ		VOICE(BRASS)		01
SW158	**V8889300**	Push Switch	EVQ 11Y 07K				01
SW159	**VV439800**	Tact Switch	SKQNAJ		VOICE(TRUMPET)		01
SW159	**V8889300**	Push Switch	EVQ 11Y 07K				01
SW160	**VV439800**	Tact Switch	SKQNAJ		VOICE(VOICE EFFECT)		01
SW160	**V8889300**	Push Switch	EVQ 11Y 07K				01
SW162	**VV439800**	Tact Switch	SKQNAJ		VOICE(ORGAN FLUTES)		01
SW162	**V8889300**	Push Switch	EVQ 11Y 07K				01
SW163	**VV439800**	Tact Switch	SKQNAJ		VOICE(ORGAN)		01
SW163	**V8889300**	Push Switch	EVQ 11Y 07K				01
SW164	**VV439800**	Tact Switch	SKQNAJ		VOICE(FLUTE & WOODWIND)		01
SW164	**V8889300**	Push Switch	EVQ 11Y 07K				01
SW165	**VV439800**	Tact Switch	SKQNAJ		VOICE(SAXOPHONE)		01
SW165	**V8889300**	Push Switch	EVQ 11Y 07K				01
SW166	**VV439800**	Tact Switch	SKQNAJ		VOICE(GUITAR & BASS)		01
SW166	**V8889300**	Push Switch	EVQ 11Y 07K				01
SW167	**VV439800**	Tact Switch	SKQNAJ		VOICE(STRINGS)		01
SW167	**V8889300**	Push Switch	EVQ 11Y 07K				01
SW168	**VV439800**	Tact Switch	SKQNAJ		VOICE(E.PIANO)		01
SW168	**V8889300**	Push Switch	EVQ 11Y 07K				01
SW169	**VV439800**	Tact Switch	SKQNAJ		VOICE(PIANO)		01
SW169	**V8889300**	Push Switch	EVQ 11Y 07K				01
WH002	--	Connector Assembly	DS-DS 7P-160		(WC56140)		
WH003	--	ENC Cable	3P L=55		(WC56150)		
*	**WC034000**	Circuit Board	EQ		(X4413A0)		
C0101	**US145100**	Ceramic Capacitor-F (chip)	0.1000 25V Z				01
-0105	**US145100**	Ceramic Capacitor-F (chip)	0.1000 25V Z				01
C0106	**UR847470**	Electrolytic Cap.	47.00 25.0V				01
C0107	**US145100**	Ceramic Capacitor-F (chip)	0.1000 25V Z				01
-0111	**US145100**	Ceramic Capacitor-F (chip)	0.1000 25V Z				01
C0112	**UR847470**	Electrolytic Cap.	47.00 25.0V				01
C0113	**US062100**	Ceramic Capacitor-SL(chip)	100P 50V J				01
C0114	**US062100**	Ceramic Capacitor-SL(chip)	100P 50V J				01
C0115	**UN866100**	Electrolytic Cap.-BP	1.00 50.0V				01
C0116	**UN866100**	Electrolytic Cap.-BP	1.00 50.0V				01
C0147	**US062470**	Ceramic Capacitor-SL(chip)	470P 50V J				01

*: New Parts

RANK: Japan only

REF NO.	PART NO.	DESCRIPTION			REMARKS	QTY	RANK
C0148	**US062470**	Ceramic Capacitor-SL(chip)	470P 50V J				01
C0149	**UN847100**	Electrolytic Cap.-BP	10.00 25.0V				01
C0150	**UN847100**	Electrolytic Cap.-BP	10.00 25.0V				01
C0201	**VE326900**	Monolithic Mylar Capacitor	0.56 50V J		⎫		01
C0201	**VR169300**	Monolithic Mylar Capacitor	ECQ-V1H564JL3		⎭		01
C0202	**VE326600**	Monolithic Mylar Capacitor	0.33 50V J		⎫		01
C0202	**VR169000**	Monolithic Mylar Capacitor	ECQ-V1H334JL3		⎭		01
C0203	**VE326400**	Monolithic Mylar Capacitor	0.22 50V J		⎫		01
C0203	**VR168700**	Monolithic Mylar Capacitor	ECQ-V1H224JL3		⎭		01
C0204	**VE326100**	Monolithic Mylar Capacitor	0.12 50V J		⎫		01
C0204	**VR168400**	Monolithic Mylar Capacitor	ECQ-V1H124JL3		⎭		01
C0205	**VE326200**	Monolithic Mylar Capacitor	0.15 50V J		⎫		
C0205	**VR168500**	Monolithic Mylar Capacitor	ECQ-V1H154JL3		⎭		01
C0206	**UA354820**	Mylar Capacitor	0.0820 50V J				01
C0207	**UA354270**	Mylar Capacitor	0.0270 50V J				01
C0208	**UA354680**	Mylar Capacitor	0.0680 50V J				01
C0209	**UA353390**	Mylar Capacitor	3900P 50V J				01
C0210	**UA354270**	Mylar Capacitor	0.0270 50V J				01
C0211	**UA353470**	Mylar Capacitor	4700P 50V J				01
C0212	**UA353680**	Mylar Capacitor	6800P 50V J				01
C0213	**UA353270**	Mylar Capacitor	2700P 50V J				01
C0214	**UA353390**	Mylar Capacitor	3900P 50V J				01
C0301	**VE326900**	Monolithic Mylar Capacitor	0.56 50V J		⎫		01
C0301	**VR169300**	Monolithic Mylar Capacitor	ECQ-V1H564JL3		⎭		01
C0302	**VE326600**	Monolithic Mylar Capacitor	0.33 50V J		⎫		01
C0302	**VR169000**	Monolithic Mylar Capacitor	ECQ-V1H334JL3		⎭		01
C0303	**VE326400**	Monolithic Mylar Capacitor	0.22 50V J		⎫		01
C0303	**VR168700**	Monolithic Mylar Capacitor	ECQ-V1H224JL3		⎭		01
C0304	**VE326100**	Monolithic Mylar Capacitor	0.12 50V J		⎫		01
C0304	**VR168400**	Monolithic Mylar Capacitor	ECQ-V1H124JL3		⎭		01
C0305	**VE326200**	Monolithic Mylar Capacitor	0.15 50V J		⎫		
C0305	**VR168500**	Monolithic Mylar Capacitor	ECQ-V1H154JL3		⎭		01
C0306	**UA354820**	Mylar Capacitor	0.0820 50V J				01
C0307	**UA354270**	Mylar Capacitor	0.0270 50V J				01
C0308	**UA354680**	Mylar Capacitor	0.0680 50V J				01
C0309	**UA353390**	Mylar Capacitor	3900P 50V J				01
C0310	**UA354270**	Mylar Capacitor	0.0270 50V J				01
C0311	**UA353470**	Mylar Capacitor	4700P 50V J				01
C0312	**UA353680**	Mylar Capacitor	6800P 50V J				01
C0313	**UA353270**	Mylar Capacitor	2700P 50V J				01
C0314	**UA353390**	Mylar Capacitor	3900P 50V J				01
CN001	**VB390600**	Connector Base Post	PH 10P TE				01
CN002	**VB390500**	Connector Base Post	PH 9P TE				03
IC001	**XF291A00**	IC	UPC4570G2		OP AMP		03
IC002	**XE518A00**	IC	UPC4574G2		OP AMP		03
-005	**XE518A00**	IC	UPC4574G2		OP AMP		03
R0103	**RD357220**	Carbon Resistor (chip)	22.0K 63M J				01
R0104	**RD357220**	Carbon Resistor (chip)	22.0K 63M J				01
R0105	**RD356560**	Carbon Resistor (chip)	5.6K 63M J				01
R0106	**RD356560**	Carbon Resistor (chip)	5.6K 63M J				01
R0109	**RD356330**	Carbon Resistor (chip)	3.3K 63M J				01
R0110	**RD356330**	Carbon Resistor (chip)	3.3K 63M J				01
R0175	**RD356330**	Carbon Resistor (chip)	3.3K 63M J				01
R0176	**RD356330**	Carbon Resistor (chip)	3.3K 63M J				01
R0177	**RD357100**	Carbon Resistor (chip)	10.0K 63M J				01
R0178	**RD357100**	Carbon Resistor (chip)	10.0K 63M J				01
R0179	**RD355100**	Carbon Resistor (chip)	100.0 63M J				01
R0180	**RD355100**	Carbon Resistor (chip)	100.0 63M J				01
R0201	**RD357180**	Carbon Resistor (chip)	18.0K 63M J				01
R0202	**RD356100**	Carbon Resistor (chip)	1.0K 63M J				01
R0203	**RD355820**	Carbon Resistor (chip)	820.0 63M J				01
R0204	**RD357150**	Carbon Resistor (chip)	15.0K 63M J				01
R0205	**RD355820**	Carbon Resistor (chip)	820.0 63M J				01
R0206	**RD357180**	Carbon Resistor (chip)	18.0K 63M J				01
R0207	**RD356270**	Carbon Resistor (chip)	2.7K 63M J				01
R0208	**RD357180**	Carbon Resistor (chip)	18.0K 63M J				01
R0209	**RD356120**	Carbon Resistor (chip)	1.2K 63M J				01
R0210	**RD357180**	Carbon Resistor (chip)	18.0K 63M J				01
R0211	**RD357120**	Carbon Resistor (chip)	12.0K 63M J				01
R0212	**RD356820**	Carbon Resistor (chip)	8.2K 63M J				01

✻: New Parts

RANK: Japan only

REF NO.	PART NO.	DESCRIPTION			REMARKS	QTY	RANK
R0213	**RD357180**	Carbon Resistor (chip)	18.0K 63M J				01
R0214	**RD356100**	Carbon Resistor (chip)	1.0K 63M J				01
R0301	**RD357180**	Carbon Resistor (chip)	18.0K 63M J				01
R0302	**RD356100**	Carbon Resistor (chip)	1.0K 63M J				01
R0303	**RD355820**	Carbon Resistor (chip)	820.0 63M J				01
R0304	**RD357150**	Carbon Resistor (chip)	15.0K 63M J				01
R0305	**RD355820**	Carbon Resistor (chip)	820.0 63M J				01
R0306	**RD357180**	Carbon Resistor (chip)	18.0K 63M J				01
R0307	**RD356270**	Carbon Resistor (chip)	2.7K 63M J				01
R0308	**RD357180**	Carbon Resistor (chip)	18.0K 63M J				01
R0309	**RD356120**	Carbon Resistor (chip)	1.2K 63M J				01
R0310	**RD357180**	Carbon Resistor (chip)	18.0K 63M J				01
R0311	**RD357120**	Carbon Resistor (chip)	12.0K 63M J				01
R0312	**RD356820**	Carbon Resistor (chip)	8.2K 63M J				01
R0313	**RD357180**	Carbon Resistor (chip)	18.0K 63M J				01
R0314	**RD356100**	Carbon Resistor (chip)	1.0K 63M J				01
R0401	**RD357470**	Carbon Resistor (chip)	47.0K 63M J				01
-0409	**RD357470**	Carbon Resistor (chip)	47.0K 63M J				01
R0413	**RD355560**	Carbon Resistor (chip)	560.0 63M J				01
-0419	**RD355560**	Carbon Resistor (chip)	560.0 63M J				01
R0501	**RD357470**	Carbon Resistor (chip)	47.0K 63M J				01
-0509	**RD357470**	Carbon Resistor (chip)	47.0K 63M J				01
R0513	**RD355560**	Carbon Resistor (chip)	560.0 63M J				01
-0519	**RD355560**	Carbon Resistor (chip)	560.0 63M J				01
R0603	**RD350000**	Carbon Resistor (chip)	0 63M J				01
R0703	**RD350000**	Carbon Resistor (chip)	0 63M J				01
	--	Circuit Board	FU60		U (VT15150)(XQ395A0)		
	--	Circuit Board	FU60		E,B,K (VT15160)(XQ395A0)		
	--	Circuit Board	FU60		N (VT15290)(XQ395A0)		
⚠	**VT139600**	Voltage Selector	M1684-E		N VOLTAGE SELECTOR		04
⚠	**VT308100**	AC Inlet	2P CCT9302-0101M		E,N,B,K		02
⚠	**VT308200**	AC Inlet	2P CCT9302-0201		U		02
	LB201530	Fuse Holder	PC-FH1				01
	--	Jumper Wire	0.55		(VD04170)		
⚠	C1 **VT575200**	Capacitor	0.01 400V J.U.C.S		}		01
⚠	C1 **V7682800**	Capacitor	0.010 VA1 J.U.C.S		}		01
⚠	C2 **FI383470**	Capacitor	4700P 400V U.C.S.V		}		01
⚠	C2 **V7683000**	Capacitor	4700P 250V J.U.C.S		}		01
⚠	C3 **FI383470**	Capacitor	4700P 400V U.C.S.V		}		01
⚠	C3 **V7683000**	Capacitor	4700P 250V J.U.C.S		}		01
	CN1 **LB932030**	Base Post Connector	VH 3P TE				01
	CN2 **LB932060**	Base Post Connector	VH 6P TE				01
⚠	F1 **KB003590**	Fuse	3.00A JU		U,N		01
⚠	F1 **KB003060**	Fuse	1.60A S		E,B,K		01
⚠	F2 **KB003060**	Fuse	1.60A S		N		01
⚠	F3 **KB003060**	Fuse	1.60A S		N		01
	J1 --	Jumper Wire	0.55		U,E,B,K (VD04170)		
	L1 --	Jumper Wire	0.55		(VD04170)		
	L2 --	Jumper Wire	0.55		(VD04170)		
	L3 **VF790900**	Coil	SU10V-D20010 10uH				03
	V8514800	Circuit Board	GHD EBUS L		(XZ138D0)		13
	V6588200	Circuit Board	MK SUB		(XZ142B0)		10
	--	Nonwoven Fabric Cloth			(VU45960)		
	VB390300	Connector Base Post	PH 7P TE				01
	VK025300	Wire Trap	52147 9P TE				01
	VK025600	Wire Trap	52147 12P TE				01
	VB941200	Diode	1SS133,1SS176				01
	C **UI527470**	Electrolytic Cap.	47.00 10.0V				01
	C2 **VF611200**	Monolithic Ceramic Cap.	0.100 50V Z				02
	J --	Jumper Wire	0.55		(VA07890)		
	J7 --	Jumper Wire	0.55		(VA07890)		
	V6588200	Circuit Board	MK SUB		(XZ142B0)		10
CN001	**V6954300**	Connector	12P PFA105-122A01				03
CN003	**V6954400**	Connector	24P PFA105-242A01				03
C0001	**US135100**	Ceramic Capacitor-F (chip)	0.1000 16V Z				01
-0004	**US135100**	Ceramic Capacitor-F (chip)	0.1000 16V Z				01
C0005	**US063100**	Ceramic Capacitor-B (chip)	1000P 50V K				01

✻: New Parts

RANK: Japan only

	REF NO.	PART NO.	DESCRIPTION			REMARKS	QTY	RANK
	IC001	**X0031200**	IC	UPD780031AYGK-N04		LKS		05
	L0001	**VR243700**	Chip Inductance	56U LEM2520 T 560J				01
	R0001	**RD357100**	Carbon Resistor (chip)	10.0K 63M J				01
	R0005	**RD356100**	Carbon Resistor (chip)	1.0K 63M J				01
	R0006	**RD354470**	Carbon Resistor (chip)	47.0 63M J				01
	-0008	**RD354470**	Carbon Resistor (chip)	47.0 63M J				01
	RA001	**RE047100**	Resistor Array	10KX4				01
	-004	**RE047100**	Resistor Array	10KX4				01
	X0001	**V6150500**	Ceramic Resonator	8.38MHz EFOS8384E5				01
		V8521500	Circuit Board	GHD H		(X2218A0)		08
		--	Nonwoven Fabric Cloth			(V852160)		
		VK024800	Wire Trap	52147 4P TE				01
		VK025600	Wire Trap	52147 12P TE				01
		VB941200	Diode	1SS133,1SS176				01
	J	**--**	Jumper Wire	0.55		(VA07890)		
		V8521400	Circuit Board	GHD M		(X2217A0)		08
		--	Nonwoven Fabric Cloth			(V846990)		
		VK024800	Wire Trap	52147 4P TE				01
		VK025300	Wire Trap	52147 9P TE				01
		VK025600	Wire Trap	52147 12P TE				01
		VK025600	Wire Trap	52147 12P TE				01
		VB941200	Diode	1SS133,1SS176				01
	J	**--**	Jumper Wire	0.55		(VA07890)		
*		**WC016600**	Circuit Board	HP		(XQ795A0,XT162A0)		
		--	Jumper Wire	0.55		(VD04170)		
	C0001	**FG644100**	Ceramic Capacitor-F	0.0100 50V Z				01
	-0005	**FG644100**	Ceramic Capacitor-F	0.0100 50V Z				01
	C0006	**--**	Jumper Wire	0.55		(VD04170)		
	C0007	**--**	Jumper Wire	0.55		(VD04170)		
	CN001	**VB858600**	Connector Base Post	PH 7P SE				01
	CN002	**VB858100**	Connector Base Post	PH 2P SE				01
	CN003	**LB919020**	Base Post Connector	XH 2P SE				01
	FL001	**VB835000**	Coil	FL5R200QNT 20uH				01
	FL001	**VB971100**	Coil	FL5R200QN 20uH				01
	FL002	**VB835000**	Coil	FL5R200QNT 20uH				01
	FL002	**VB971100**	Coil	FL5R200QN 20uH				01
	FL003	**V3085000**	Choke Coil	R-5C.10U 10uH				
	FL004	**VB835000**	Coil	FL5R200QNT 20uH				01
	FL004	**VB971100**	Coil	FL5R200QN 20uH				01
	FL005	**VB835000**	Coil	FL5R200QNT 20uH				01
	FL005	**VB971100**	Coil	FL5R200QN 20uH				01
	FL006	**V3085000**	Choke Coil	R-5C.10U 10uH				
	HP001	**LB101870**	Phone Jack	YKB21-5006		PHONES		03
	HP002	**LB101870**	Phone Jack	YKB21-5006		PHONES		03
	R0001	**V9295000**	Carbon Resistor	33.0 1/2 J				01
	-0004	**V9295000**	Carbon Resistor	33.0 1/2 J				01
	R0005	**--**	Jumper Wire	0.55		(VD04170)		
*		**WB943900**	Circuit Board	INV		(WB94350)(X4532D0)		
*		**WB943700**	Circuit Board	MV2		(WB94350)(X4532D0)		
*		**WB943600**	Circuit Board	PNC		(WB94350)(X4532D0)		
		--	Jumper Wire	0.55		(VA07890)		
	C0100	**FG644100**	Ceramic Capacitor-F	0.0100 50V Z				01
	C0101	**VP473700**	Electrolytic Cap.	220.00 10.0V				
	C0102	**VP473900**	Electrolytic Cap.	10.00 16.0V				
*	C0104	**WC033100**	Metalized Capacitor	0.180 250V K				
	C0105	**WB536300**	Ceramic Capacitor-SL	12P 3KV J				
	CN100	**VB858700**	Connector Base Post	PH 8P SE				01
	CN101	**VB858300**	Connector Base Post	PH 4P SE				01
	CN102	**VB858200**	Connector Base Post	PH 3P SE				01
	CN103	**VV878800**	Connector Plug	1.25FJ 15P TE				02
	CN104	**WB748700**	Connector	S02(8.0)B-BHS				
	D0100	**VD631600**	Diode	1SS133,176,HSS104				01
	D0110	**VD631600**	Diode	1SS133,176,HSS104				01
	-0116	**VD631600**	Diode	1SS133,176,HSS104				01
	D0120	**VD631600**	Diode	1SS133,176,HSS104				01
	-0127	**VD631600**	Diode	1SS133,176,HSS104				01

*: New Parts

RANK: Japan only

	REF NO.	PART NO.	DESCRIPTION			REMARKS	QTY	RANK
	D0130	**VD631600**	Diode	1SS133,176,HSS104				01
	-0137	**VD631600**	Diode	1SS133,176,HSS104				01
	L0100	**GE901870**	Coil	SN3-205B 10uH				03
*	L0101	**WB531900**	Coil	RCH-108-221 220uH				
*	LD040	**WC355100**	LED Yellow	SEL2710Y TP21		KEYBOARD GUIDE LAMP		
*	LD041	**WC355100**	LED Yellow	SEL2710Y TP21		KEYBOARD GUIDE LAMP		
*	LD043	**WC355100**	LED Yellow	SEL2710Y TP21		KEYBOARD GUIDE LAMP		
*	LD046	**WC355100**	LED Yellow	SEL2710Y TP21		KEYBOARD GUIDE LAMP		
*	LD047	**WC355100**	LED Yellow	SEL2710Y TP21		KEYBOARD GUIDE LAMP		
*	LD048	**WC355100**	LED Yellow	SEL2710Y TP21		KEYBOARD GUIDE LAMP		
*	LD049	**WC355100**	LED Yellow	SEL2710Y TP21		KEYBOARD GUIDE LAMP		
*	LD050	**WC355000**	LED Red	SEL2210R TP21		KEYBOARD GUIDE LAMP		
*	LD051	**WC355000**	LED Red	SEL2210R TP21		KEYBOARD GUIDE LAMP		
*	LD052	**WC355000**	LED Red	SEL2210R TP21		KEYBOARD GUIDE LAMP		
*	LD053	**WC355000**	LED Red	SEL2210R TP21		KEYBOARD GUIDE LAMP		
*	LD054	**WC355000**	LED Red	SEL2210R TP21		KEYBOARD GUIDE LAMP		
*	LD055	**WC355000**	LED Red	SEL2210R TP21		KEYBOARD GUIDE LAMP		
*	LD056	**WC355000**	LED Red	SEL2210R TP21		KEYBOARD GUIDE LAMP		
*	LD057	**WC355000**	LED Red	SEL2210R TP21		KEYBOARD GUIDE LAMP		
*	LD058	**WC355000**	LED Red	SEL2210R TP21		KEYBOARD GUIDE LAMP		
*	LD059	**WC355000**	LED Red	SEL2210R TP21		KEYBOARD GUIDE LAMP		
	R0100	**HF455330**	Carbon Resistor	330.0 1/4 J				01
	R0100	**HF755330**	Carbon Resistor	330.0 1/4 J				01
	R0101	**HF457220**	Carbon Resistor	22.0K 1/4 J				01
	R0101	**HF757220**	Carbon Resistor	22.0K 1/4 J				01
	R0102	**HF456150**	Carbon Resistor	1.5K 1/4 J				01
	R0102	**HF756150**	Carbon Resistor	1.5K 1/4 J				01
	R0103	**HF456150**	Carbon Resistor	1.5K 1/4 J				01
	R0103	**HF756150**	Carbon Resistor	1.5K 1/4 J				01
	R0104	**HF457470**	Carbon Resistor	47.0K 1/4 J				01
	R0104	**HF757470**	Carbon Resistor	47.0K 1/4 J				01
	R0900	**--**	Jumper Wire	0.55		(VA07890)		
	R0910	**--**	Jumper Wire	0.55		(VA07890)		
	R0920	**--**	Jumper Wire	0.55		(VA07890)		
	SW110	**VV439800**	Tact Switch	SKQNAJ		A button		01
	SW111	**VV439800**	Tact Switch	SKQNAJ		B button		01
	SW112	**VV439800**	Tact Switch	SKQNAJ		C button		01
	SW113	**VV439800**	Tact Switch	SKQNAJ		D button		01
	SW114	**VV439800**	Tact Switch	SKQNAJ		E button		01
	SW115	**VV439800**	Tact Switch	SKQNAJ		DIRECT ACCESS		01
	SW116	**VV439800**	Tact Switch	SKQNAJ		CHANNEL ON/OFF		01
	SW120	**VV439800**	Tact Switch	SKQNAJ		UP(1)		01
	SW121	**VV439800**	Tact Switch	SKQNAJ		UP(2)		01
	SW122	**VV439800**	Tact Switch	SKQNAJ		UP(3)		01
	SW123	**VV439800**	Tact Switch	SKQNAJ		UP(4)		01
	SW124	**VV439800**	Tact Switch	SKQNAJ		UP(5)		01
	SW125	**VV439800**	Tact Switch	SKQNAJ		UP(6)		01
	SW126	**VV439800**	Tact Switch	SKQNAJ		UP(7)		01
	SW127	**VV439800**	Tact Switch	SKQNAJ		UP(8)		01
	SW130	**VV439800**	Tact Switch	SKQNAJ		DOWN(1)		01
	SW131	**VV439800**	Tact Switch	SKQNAJ		DOWN(2)		01
	SW132	**VV439800**	Tact Switch	SKQNAJ		DOWN(3)		01
	SW133	**VV439800**	Tact Switch	SKQNAJ		DOWN(4)		01
	SW134	**VV439800**	Tact Switch	SKQNAJ		DOWN(5)		01
	SW135	**VV439800**	Tact Switch	SKQNAJ		DOWN(6)		01
	SW136	**VV439800**	Tact Switch	SKQNAJ		DOWN(7)		01
	SW137	**VV439800**	Tact Switch	SKQNAJ		DOWN(8)		01
	T0100	**WC013800**	Inverter Transformer	EP208B/TW 225mH				
	TR100	**VP872600**	Transistor	2SA1708 S,T				01
	TR101	**VS185600**	Transistor	2SD1863 TV2 82-390				01
	TR102	**VS185600**	Transistor	2SD1863 TV2 82-390				01
	VR100	**VS368200**	Rotary Variable Resistor	B10K RK09K1130BN7A		LCD CONTRAST		01
	VR101	**WA994700**	Rotary Variable Resistor	A 10K XV014111YGPV		MASTER VOLUME		02
		--	Circuit Board	MA80S		U (WB55500)(X4384D0)		
		--	Circuit Board	MA80S		E,N,B,K (WC03050)(X4384D0)		
		VT740000	Support, PCB	3T-9 T=9			2	03
		--	Silicon Grease	X-113A G746		(VA79810)		
		VJ834500	Insulation Sheet	#1000				03
		--	Jumper Wire	0.55		(VD04170)		

*: New Parts

RANK: Japan only

REF NO.	PART NO.	DESCRIPTION			REMARKS	QTY	RANK
C0001	**V7545000**	Monolithic Ceramic Cap.	0.0220 250V K				01
-0003	**V7545000**	Monolithic Ceramic Cap.	0.0220 250V K				01
C0005	**VL232400**	Electrolytic Cap.	3300 35.0V				04
-0008	**VL232400**	Electrolytic Cap.	3300 35.0V				04
C0009	**US145100**	Ceramic Capacitor-F (chip)	0.1000 25V Z				01
C0010	**US063100**	Ceramic Capacitor-B (chip)	1000P 50V K				01
C0011	**UN866100**	Electrolytic Cap.-BP	1.00 50.0V				01
C0012	**US062220**	Ceramic Capacitor-SL(chip)	220P 50V J				01
C0013	**UR838100**	Electrolytic Cap.	100.00 16.0V				01
C0015	**UR868100**	Electrolytic Cap.	100.00 50.0V				01
C0016	**UR867100**	Electrolytic Cap.	10.00 50.0V				01
C0017	**UR867100**	Electrolytic Cap.	10.00 50.0V				01
C0018	**UR868100**	Electrolytic Cap.	100.00 50.0V				01
C0019	**V5333500**	Ceramic Capacitor-B (chip)	10.00 6.3V K				01
C0020	**UR838100**	Electrolytic Cap.	100.00 16.0V				01
C0021	**US062220**	Ceramic Capacitor-SL(chip)	220P 50V J				01
C0022	**US063100**	Ceramic Capacitor-B (chip)	1000P 50V K				01
C0023	**UN866100**	Electrolytic Cap.-BP	1.00 50.0V				01
C0025	**US145100**	Ceramic Capacitor-F (chip)	0.1000 25V Z				01
-0028	**US145100**	Ceramic Capacitor-F (chip)	0.1000 25V Z				01
C0029	**UN838100**	Electrolytic Cap.-BP	100.00 16.0V				01
C0030	**V5333500**	Ceramic Capacitor-B (chip)	10.00 6.3V K				01
C0031	**VL232300**	Electrolytic Cap.	2200 25.0V				03
C0032	**VL232300**	Electrolytic Cap.	2200 25.0V				03
C0033	**UR866100**	Electrolytic Cap.	1.00 50.0V				01
-0036	**UR866100**	Electrolytic Cap.	1.00 50.0V				01
C0037	**US145100**	Ceramic Capacitor-F (chip)	0.1000 25V Z				01
-0040	**US145100**	Ceramic Capacitor-F (chip)	0.1000 25V Z				01
C0041	**VL232400**	Electrolytic Cap.	3300 35.0V				04
C0043	**US145100**	Ceramic Capacitor-F (chip)	0.1000 25V Z				01
C0047	**UR866330**	Electrolytic Cap.	3.30 50.0V				01
C0051	**VL232400**	Electrolytic Cap.	3300 35.0V				04
C0052	**WB477000**	Electrolytic Cap.	330.00 35.0V		⎫		
C0052	**WC303700**	Electrolytic Cap.	330.00 35.0V		⎭		
C0054	**WB476900**	Electrolytic Cap.	470.00 16.0V		⎫		
C0054	**WC303600**	Electrolytic Cap.	470.00 16.0V		⎭		
C0055	**WB476900**	Electrolytic Cap.	470.00 16.0V		⎫		
C0055	**WC303600**	Electrolytic Cap.	470.00 16.0V		⎭		
C0059	**US061270**	Ceramic Capacitor-CH(chip)	27P 50V J				01
C0060	**US061270**	Ceramic Capacitor-CH(chip)	27P 50V J				01
CN001	**LB932080**	Base Post Connector	VH 8P TE				01
CN003	**VB390000**	Connector Base Post	PH 4P TE				01
CN004	**LB918040**	Base Post Connector	XH 4P TE				01
CN005	**LB932040**	Base Post Connector	VH 4P TE				01
CN006	**VB390500**	Connector Base Post	PH 9P TE				03
CN008	**LB918020**	Base Post Connector	XH 2P TE				01
CN009	**LB918040**	Base Post Connector	XH 4P TE				01
CN010	**VB390000**	Connector Base Post	PH 4P TE				01
D0001	**WB520600**	Diode	10EDB40-TA2B5		⎫		01
D0001	**WD009700**	Diode	10EDB40-TA1B2		⎭		
D0002	**WB520600**	Diode	10EDB40-TA2B5		⎫		01
D0002	**WD009700**	Diode	10EDB40-TA1B2		⎭		
D0003	**VT332900**	Diode	1SS355 TE-17				01
-0005	**VT332900**	Diode	1SS355 TE-17				01
D0008	**VT332900**	Diode	1SS355 TE-17				01
D0009	**VT332900**	Diode	1SS355 TE-17				01
⚠ DB001	**VQ111500**	Diode Stack	D3SBA20-4103 4.0A				03
⚠ DB002	**VQ111500**	Diode Stack	D3SBA20-4103 4.0A				03
⚠ DB003	**VR253700**	Diode Stack	S1NB20 1.0A 200V				02
F0001	**WC050700**	Fuse Clip	EYF52BCY				01
-0003	**WC050700**	Fuse Clip	EYF52BCY				01
⚠ FS1	**KB003630**	Fuse	5.00A JU		U		01
⚠ -3	**KB003630**	Fuse	5.00A JU		U		01
⚠ FS1	**KB003240**	Fuse	5.00A S 250V		E,N,B,K		01
⚠ -3	**KB003240**	Fuse	5.00A S 250		E,N,B,K		01
IC003	**XJ602A00**	IC	NJM78M12FA		REGULATOR +12V 0.5A		02
IC004	**XD343A00**	IC	NJM79M12FA		REGULATOR -12V		03
IC006	**X4375A00**	IC	STK402-040S		POWER AMP. 40W+40W		
IC007	**X4404A00**	Hybrid IC	MPD6S004S		DC-DC CONVERTER		
J0004	**--**	Jumper Wire	0.55		(VD04170)		

✻: New Parts

RANK: Japan only

REF NO.	PART NO.	DESCRIPTION			REMARKS	QTY	RANK
-0006	--	Jumper Wire	0.55		(VD04170)		
⚠ R0001	**VU253100**	Fuse Resistor	0.47 1/2 J				01
⚠ R0002	**VU253100**	Fuse Resistor	0.47 1/2 J				01
R0003	**RD156100**	Carbon Resistor (chip)	1.0K 1/4 J				
R0005	**RD356470**	Carbon Resistor (chip)	4.7K 63M J				01
R0006	**RD357100**	Carbon Resistor (chip)	10.0K 63M J				01
R0007	**RD356220**	Carbon Resistor (chip)	2.2K 63M J				01
R0010	**RD355560**	Carbon Resistor (chip)	560.0 63M J				01
R0011	**RD357100**	Carbon Resistor (chip)	10.0K 63M J				01
R0012	**RD355390**	Carbon Resistor (chip)	390.0 63M J				01
R0013	**RD357120**	Carbon Resistor (chip)	12.0K 63M J				01
R0014	**HW095100**	Fuse Resistor	100.0 1/4 J				01
R0015	**RD157100**	Carbon Resistor (chip)	10.0K 1/4 J				01
R0020	**HW095100**	Fuse Resistor	100.0 1/4 J				01
R0021	**RD357120**	Carbon Resistor (chip)	12.0K 63M J				01
R0022	**RD355390**	Carbon Resistor (chip)	390.0 63M J				01
R0023	**RD355560**	Carbon Resistor (chip)	560.0 63M J				01
R0024	**RD357100**	Carbon Resistor (chip)	10.0K 63M J				01
R0027	**VC742500**	Metal Oxide Film Resistor	10.0 1W J				01
R0028	**VC742500**	Metal Oxide Film Resistor	10.0 1W J				01
R0029	**RD157100**	Carbon Resistor (chip)	10.0K 1/4 J				01
R0030	**RD157100**	Carbon Resistor (chip)	10.0K 1/4 J				01
R0031	**RD356120**	Carbon Resistor (chip)	1.2K 63M J				01
R0032	**RD357470**	Carbon Resistor (chip)	47.0K 63M J				01
R0033	--	Jumper Wire	0.55		(VD04170)		
-0036	--	Jumper Wire	0.55		(VD04170)		
R0045	**RD350000**	Carbon Resistor (chip)	0 63M J				01
RY001	**WB476400**	Relay	DC G5PA-28 12V				03
TR002	**VV556400**	Transistor	2SC2412K Q,R,S				01
-004	**VV556400**	Transistor	2SC2412K Q,R,S				01
TR008	**VV556400**	Transistor	2SC2412K Q,R,S				01
TR009	**VV556400**	Transistor	2SC2412K Q,R,S				01
*	**WD052300**	Circuit Board	MIC		(XV507D0)		
	--	Jumper Wire	0.55		(VD04170)		
J	**RD250000**	Carbon Resistor (chip)	0.0 0.0 J				01
C0100	**UB013270**	Monolithic Ceramic Cap.	B 2700P 50V K				01
C0101	**UB445470**	Monolithic Ceramic Cap.	F 0.470 16V Z				01
C0102	**UB052100**	Monolithic Ceramic Cap.	SL 100P 50V J				01
C0150	**UB052220**	Monolithic Ceramic Cap.	SL 220P 50V J				01
C0151	**UB446100**	Ceramic Capacitor-F (chip)	F 1.0 16V Z				01
C0152	**UB052100**	Monolithic Ceramic Cap.	SL 100P 50V J				01
C0200	**UB446100**	Ceramic Capacitor-F (chip)	F 1.0 16V Z				01
C0201	**UB013100**	Monolithic Ceramic Cap.	B 1000P 50V K				01
C0300	**UB045100**	Monolithic Ceramic Cap.	F 0.100 50V Z				01
C0301	**UR848100**	Electrolytic Cap.	100.00 25.0V				01
C0302	**UR848100**	Electrolytic Cap.	100.00 25.0V				01
C0303	**UB045100**	Monolithic Ceramic Cap.	F 0.100 50V Z				01
C0304	**UB045100**	Monolithic Ceramic Cap.	F 0.100 50V Z				01
CN300	**VB858400**	Connector Base Post	PH 5P SE				01
CN301	**VB858100**	Connector Base Post	PH 2P SE				01
IC100	**XF291A00**	IC	UPC4570G2		OP AMP		03
JK200	**LB101870**	Phone Jack	YKB21-5006		MIC./LINE IN		03
L0200	--	Jumper Wire	0.55		(VD04170)		
L0201	**GE300670**	Ferrite Bead	BL02RN2-R62T4				02
L0201	**V2635200**	Ferrite Bead	RH03506BT-B				
R0100	**RD256100**	Carbon Resistor (chip)	1.0K 0.1 J				01
R0101	**RD257100**	Carbon Resistor (chip)	10.0K 0.1 J				01
R0150	**RD257270**	Carbon Resistor (chip)	27.0K 0.1 J				01
R0151	**RD256100**	Carbon Resistor (chip)	1.0K 0.1 J				01
R0301	**RD250000**	Carbon Resistor (chip)	0.0 0.0 J				01
R0400	**RD255470**	Carbon Resistor (chip)	470.0 0.1 J				01
R0401	**UB013100**	Monolithic Ceramic Cap.	B 1000P 50V K				01
SW400	**VZ050000**	Slide Switch	SSSF122-S09N0		MIC./LINE		01
VR500	**V3340000**	Rotary Variable Resistor	A 10.0K RK0971230		INPUT VOLUME		04
WB300	**GE300670**	Ferrite Bead	BL02RN2-R62T4				02
-304	**GE300670**	Ferrite Bead	BL02RN2-R62T4				02
WB300	**V2635200**	Ferrite Bead	RH03506BT-B				
-304	**V2635200**	Ferrite Bead	RH03506BT-B				

*: New Parts

RANK: Japan only

	REF NO.	PART NO.	DESCRIPTION			REMARKS	QTY	RANK
*		**WC175500**	Circuit Board	NET1		(XT123B0)		
		--	Jumper Wire	0.55		(VD04170)		
*	C0003	**V5928200**	Electrolytic Cap.-BP	1.50 63.0V				
*	C0004	**V5928200**	Electrolytic Cap.-BP	1.50 63.0V				
	CN001	**LB932040**	Base Post Connector	VH 4P TE				01
	CN002	**LB932050**	Base Post Connector	VH 5P TE				01
	CN003	**LB918050**	Base Post Connector	XH 5P TE				01
		WB970400	Circuit Board	PEDAL (SW)		(WB97030)(XR780C0)		08
		WB970500	Circuit Board	PEDAL VR		(WB97030)(XR780C0)		07
		VB858500	Connector Base Post	PH 6P SE				01
		HS412520	Rotary Variable Resistor	RK16Y11L0001A		DAMPER PEDAL		05
		--	Jumper Wire	0.55		(VD04170)		
		--	Earth Wire	L=30		(VZ01760)		
*		**WC561200**	Circuit Board	PJK		(X5143A0)		
	C0001	**US062100**	Ceramic Capacitor-SL(chip)	100P 50V J				01
	-0004	**US062100**	Ceramic Capacitor-SL(chip)	100P 50V J				01
	CN001	**VB390100**	Connector Base Post	PH 5P TE				01
	D0001	**VB493900**	Diode	MA221				01
	-0006	**VB493900**	Diode	MA221				01
	D0001	**VV925900**	Diode	RLS-73 TE-11				01
	-0006	**VV925900**	Diode	RLS-73 TE-11				01
	JK001	**V4874800**	DIN Connector	6P MD-S613		PEDAL		02
	L0001	**VQ724900**	Chip Inductance	BK2125HM601-T				01
	-0004	**VQ724900**	Chip Inductance	BK2125HM601-T				01
		VU659100	Circuit Board	PL		(XR898A0)		03
		VB858100	Connector Base Post	PH 2P SE				01
		VD180000	LED Red	SLZ-190B-03		POWER Indicator		01
*		**WD159000**	Circuit Board	PNL(PNL1,PNL2)		(X4479D0)		
		--	Circuit Board	PNL1		(WD15900,WD15910,X4479D0)		
		--	Circuit Board	PNL2		(WD15900,WD15920,X4479D0)		
	C0100	**US064100**	Ceramic Capacitor-B (chip)	0.0100 50V K				01
	C0101	**US064100**	Ceramic Capacitor-B (chip)	0.0100 50V K				01
	C0102	**US062470**	Ceramic Capacitor-SL(chip)	470P 50V J				01
	-0121	**US062470**	Ceramic Capacitor-SL(chip)	470P 50V J				01
	C0122	**US063100**	Ceramic Capacitor-B (chip)	1000P 50V K				01
	C0123	**US135100**	Ceramic Capacitor-F (chip)	0.1000 16V Z				01
	C0124	**US064100**	Ceramic Capacitor-B (chip)	0.0100 50V K				01
	C0126	**US062470**	Ceramic Capacitor-SL(chip)	470P 50V J				01
	-0141	**US062470**	Ceramic Capacitor-SL(chip)	470P 50V J				01
	C0142	**VP473700**	Electrolytic Cap.	220.00 10.0V				
	C0143	**US064100**	Ceramic Capacitor-B (chip)	0.0100 50V K				01
	C0145	**RD350000**	Carbon Resistor (chip)	0 63M J				01
	C0146	**VP473700**	Electrolytic Cap.	220.00 10.0V				
	C0148	**VP473700**	Electrolytic Cap.	220.00 10.0V				
	C0149	**VP473600**	Electrolytic Cap.	100.00 10.0V				01
	C0150	**US061330**	Ceramic Capacitor-CH(chip)	33P 50V J				01
	C0151	**US061330**	Ceramic Capacitor-CH(chip)	33P 50V J				01
	C0152	**US064100**	Ceramic Capacitor-B (chip)	0.0100 50V K				01
	C0153	**VP473600**	Electrolytic Cap.	100.00 10.0V				01
	C0154	**US064100**	Ceramic Capacitor-B (chip)	0.0100 50V K				01
	C0155	**US064100**	Ceramic Capacitor-B (chip)	0.0100 50V K				01
	C0156	**VP473700**	Electrolytic Cap.	220.00 10.0V				
	C0157	**US064100**	Ceramic Capacitor-B (chip)	0.0100 50V K				01
	CN100	**VB858600**	Connector Base Post	PH 7P SE				01
	CN101	**VB858500**	Connector Base Post	PH 6P SE				01
	CN102	**VB858800**	Connector Base Post	PH 9P SE				01
	CN103	**VV878700**	Connector Receptacle	1.25FJ 15P TE				01
	CN107	**VB389600**	Connector Base Post	PH 11P SE				01
	CN108	**VB858300**	Connector Base Post	PH 4P SE				01
	D0080	**VT332900**	Diode	1SS355 TE-17				01
	-0083	**VT332900**	Diode	1SS355 TE-17				01
	D0085	**VT332900**	Diode	1SS355 TE-17				01
	-0089	**VT332900**	Diode	1SS355 TE-17				01
	D0091	**VT332900**	Diode	1SS355 TE-17				01
	D0094	**VT332900**	Diode	1SS355 TE-17				01
	D0096	**VT332900**	Diode	1SS355 TE-17				01

*: New Parts

RANK: Japan only

	REF NO.	PART NO.	DESCRIPTION			REMARKS	QTY	RANK
	-0100	**VT332900**	Diode	1SS355 TE-17				01
	D0103	**VT332900**	Diode	1SS355 TE-17				01
	-0113	**VT332900**	Diode	1SS355 TE-17				01
	D0145	**VT332900**	Diode	1SS355 TE-17				01
	-0179	**VT332900**	Diode	1SS355 TE-17				01
	D0181	**VT332900**	Diode	1SS355 TE-17				01
	-0190	**VT332900**	Diode	1SS355 TE-17				01
*	IC100	**X4406100**	IC	M38044M4-C16FP		LED DRIVER/SWITCH SCAN		
	L0102	**VY657200**	Chip Inductance	600 BK1608HM601				01
	-0104	**VY657200**	Chip Inductance	600 BK1608HM601				01
	L0105	**GE901870**	Coil	SN3-205B 10uH				03
	L0106	**GE901870**	Coil	SN3-205B 10uH				03
*	LD060	**WC355100**	LED Yellow	SEL2710Y TP21		KEYBOARD GUIDE LAMP		
*	LD061	**WC355100**	LED Yellow	SEL2710Y TP21		KEYBOARD GUIDE LAMP		
*	LD062	**WC355100**	LED Yellow	SEL2710Y TP21		KEYBOARD GUIDE LAMP		
	LD064	**VG197600**	LED Green/Red	GL3ED8		SONG(EXTRA TRACKS(STYLE))		01
	LD065	**VG197600**	LED Green/Red	GL3ED8		SONG(PLAY/PAUSE)		01
	LD066	**VG197600**	LED Green/Red	GL3ED8		SONG(TRACK 2(L))		01
	LD067	**VG197600**	LED Green/Red	GL3ED8		SONG(TRACK 1(R))		01
*	LD068	**WC355100**	LED Yellow	SEL2710Y TP21		KEYBOARD GUIDE LAMP		
	LD070	**WB947500**	LED Red	SLZ-9G81B-34-T1		SONG(GUIDE)		
	LD071	**WB947500**	LED Red	SLZ-9G81B-34-T1		SONG(REPEAT)		
	LD072	**WB947500**	LED Red	SLZ-9G81B-34-T1		SONG(REC)		
	LD073	**WB947500**	LED Red	SLZ-9G81B-34-T1		SONG(PERFORMANCE ASSISTANT)		
*	LD078	**WC355000**	LED Red	SEL2210R TP21		KEYBOARD GUIDE LAMP		
	LD079	**WB947500**	LED Red	SLZ-9G81B-34-T1		VOLUME(FADE IN/OUT)		
*	LD080	**WC355000**	LED Red	SEL2210R TP21		KEYBOARD GUIDE LAMP		
*	LD081	**WC355000**	LED Red	SEL2210R TP21		KEYBOARD GUIDE LAMP		
*	LD082	**WC355000**	LED Red	SEL2210R TP21		KEYBOARD GUIDE LAMP		
*	LD083	**WC355000**	LED Red	SEL2210R TP21		KEYBOARD GUIDE LAMP		
*	LD084	**WC355000**	LED Red	SEL2210R TP21		KEYBOARD GUIDE LAMP		
*	LD085	**WC355000**	LED Red	SEL2210R TP21		KEYBOARD GUIDE LAMP		
*	LD086	**WC355000**	LED Red	SEL2210R TP21		KEYBOARD GUIDE LAMP		
*	LD087	**WC355000**	LED Red	SEL2210R TP21		KEYBOARD GUIDE LAMP		
*	LD088	**WC355000**	LED Red	SEL2210R TP21		KEYBOARD GUIDE LAMP		
*	LD089	**WC355000**	LED Red	SEL2210R TP21		KEYBOARD GUIDE LAMP		
*	LD140	**WC355000**	LED Red	SEL2210R TP21		KEYBOARD GUIDE LAMP		
*	LD141	**WC355000**	LED Red	SEL2210R TP21		KEYBOARD GUIDE LAMP		
*	LD142	**WC355000**	LED Red	SEL2210R TP21		KEYBOARD GUIDE LAMP		
*	LD143	**WC355000**	LED Red	SEL2210R TP21		KEYBOARD GUIDE LAMP		
*	LD144	**WC355000**	LED Red	SEL2210R TP21		KEYBOARD GUIDE LAMP		
*	LD145	**WC355000**	LED Red	SEL2210R TP21		KEYBOARD GUIDE LAMP		
*	LD146	**WC355000**	LED Red	SEL2210R TP21		KEYBOARD GUIDE LAMP		
*	LD147	**WC355000**	LED Red	SEL2210R TP21		KEYBOARD GUIDE LAMP		
*	LD148	**WC355000**	LED Red	SEL2210R TP21		KEYBOARD GUIDE LAMP		
*	LD149	**WC355000**	LED Red	SEL2210R TP21		KEYBOARD GUIDE LAMP		
*	LD153	**WC355100**	LED Yellow	SEL2710Y TP21		KEYBOARD GUIDE LAMP		
*	LD154	**WC355100**	LED Yellow	SEL2710Y TP21		KEYBOARD GUIDE LAMP		
*	LD155	**WC355100**	LED Yellow	SEL2710Y TP21		KEYBOARD GUIDE LAMP		
*	LD156	**WC355100**	LED Yellow	SEL2710Y TP21		KEYBOARD GUIDE LAMP		
*	LD157	**WC355100**	LED Yellow	SEL2710Y TP21		KEYBOARD GUIDE LAMP		
*	LD158	**WC355100**	LED Yellow	SEL2710Y TP21		KEYBOARD GUIDE LAMP		
*	LD159	**WC355100**	LED Yellow	SEL2710Y TP21		KEYBOARD GUIDE LAMP		
	LD160	**WB947500**	LED Red	SLZ-9G81B-34-T1		STYLE(ACMP ON/OFF)		
	LD161	**WB947500**	LED Red	SLZ-9G81B-34-T1		STYLE(OTS LINK)		
	LD162	**WB947500**	LED Red	SLZ-9G81B-34-T1		STYLE(AUTO FILL IN)		
	LD163	**VG197600**	LED Green/Red	GL3ED8		STYLE(INTRO 1)		01
	LD164	**VG197600**	LED Green/Red	GL3ED8		STYLE(INTRO 2)		01
	LD165	**VG197600**	LED Green/Red	GL3ED8		STYLE(INTRO 3)		01
	LD166	**VG197600**	LED Green/Red	GL3ED8		STYLE(MAIN VARIATION(A))		01
	LD167	**VG197600**	LED Green/Red	GL3ED8		STYLE(MAIN VARIATION(B))		01
	LD168	**VG197600**	LED Green/Red	GL3ED8		STYLE(MAIN VARIATION(C))		01
	LD169	**VG197600**	LED Green/Red	GL3ED8		STYLE(MAIN VARIATION(D))		01
*	LD170	**WC355100**	LED Yellow	SEL2710Y TP21		KEYBOARD GUIDE LAMP		
*	LD171	**WC355100**	LED Yellow	SEL2710Y TP21		KEYBOARD GUIDE LAMP		
*	LD172	**WC355100**	LED Yellow	SEL2710Y TP21		KEYBOARD GUIDE LAMP		
	LD181	**VG197600**	LED Green/Red	GL3ED8		STYLE(BREAK)		01
	LD182	**VG197600**	LED Green/Red	GL3ED8		STYLE(ENDING/rit.(1))		01
	LD183	**VG197600**	LED Green/Red	GL3ED8		STYLE(ENDING/rit.(2))		01

*: New Parts

RANK: Japan only

REF NO.	PART NO.	DESCRIPTION			REMARKS	QTY	RANK
LD184	**VG197600**	LED Green/Red	GL3ED8		STYLE(ENDING/rit.(3))		01
LD187	**VG197600**	LED Green/Red	GL3ED8		STYLE(START/STOP)		01
* LD189	**WD053900**	LED Green	SEL6410G		SIGNAL		
LD195	**WB947500**	LED Red	SLZ-9G81B-34-T1		STYLE(SYNC STOP)		
LD196	**WB947500**	LED Red	SLZ-9G81B-34-T1		STYLE(SYNC START)		
LD198	**WB947500**	LED Red	SLZ-9G81B-34-T1		METRONOME(ON/OFF)		
LD199	**WB947500**	LED Red	SLZ-9G81B-34-T1		OVER		
LDHOL	**WC176600**	LED Spacer	L=9.0			17	
R0100	**RD154470**	Carbon Resistor (chip)	47.0 1/4 J				01
-0102	**RD154470**	Carbon Resistor (chip)	47.0 1/4 J				01
R0103	**RD155220**	Carbon Resistor (chip)	220.0 1/4 J				
R0104	**RD155100**	Carbon Resistor (chip)	100.0 1/4 J				01
-0106	**RD155100**	Carbon Resistor (chip)	100.0 1/4 J				01
R0107	**RD154470**	Carbon Resistor (chip)	47.0 1/4 J				01
-0111	**RD154470**	Carbon Resistor (chip)	47.0 1/4 J				01
R0112	**RD155100**	Carbon Resistor (chip)	100.0 1/4 J				01
R0113	**RD155100**	Carbon Resistor (chip)	100.0 1/4 J				01
R0114	**RD154470**	Carbon Resistor (chip)	47.0 1/4 J				01
R0115	**RD155100**	Carbon Resistor (chip)	100.0 1/4 J				01
R0116	**RD154470**	Carbon Resistor (chip)	47.0 1/4 J				01
-0119	**RD154470**	Carbon Resistor (chip)	47.0 1/4 J				01
R0121	**RD357100**	Carbon Resistor (chip)	10.0K 63M J				01
R0123	**RD356100**	Carbon Resistor (chip)	1.0K 63M J				01
R0124	**RD354470**	Carbon Resistor (chip)	47.0 63M J				01
R0125	**RD354470**	Carbon Resistor (chip)	47.0 63M J				01
R0127	**RD357100**	Carbon Resistor (chip)	10.0K 63M J				01
-0136	**RD357100**	Carbon Resistor (chip)	10.0K 63M J				01
R0137	**RD155120**	Carbon Resistor (chip)	120.0 1/4 J				01
R0138	**RD155120**	Carbon Resistor (chip)	120.0 1/4 J				01
R0139	**RD154560**	Carbon Resistor (chip)	56.0 1/4 J				01
R0140	**RD154560**	Carbon Resistor (chip)	56.0 1/4 J				01
R0141	**RD155120**	Carbon Resistor (chip)	120.0 1/4 J				01
R0142	**RD154560**	Carbon Resistor (chip)	56.0 1/4 J				01
R0143	**RD155120**	Carbon Resistor (chip)	120.0 1/4 J				01
R0144	**RD354470**	Carbon Resistor (chip)	47.0 63M J				01
R0145	**RD354470**	Carbon Resistor (chip)	47.0 63M J				01
SW080	**VV439800**	Tact Switch	SKQNAJ		TRANSPOSE(RESET,-)		01
SW080	**V8889300**	Push Switch	EVQ 11Y 07K				01
SW081	**VV439800**	Tact Switch	SKQNAJ		TRANSPOSE(RESET,+)		01
SW081	**V8889300**	Push Switch	EVQ 11Y 07K				01
SW082	**VV439800**	Tact Switch	SKQNAJ		SONG(NEW SONG,REC)		01
SW082	**V8889300**	Push Switch	EVQ 11Y 07K				01
SW083	**VV439800**	Tact Switch	SKQNAJ		SONG(NEW SONG,SYNC START,		01
SW083	**V8889300**	Push Switch	EVQ 11Y 07K		STOP)		01
SW085	**VV439800**	Tact Switch	SKQNAJ		SONG(SYNC START,PLAY/		01
SW085	**V8889300**	Push Switch	EVQ 11Y 07K		PAUSE)		01
SW086	**VV439800**	Tact Switch	SKQNAJ		SONG(REW)		01
SW086	**V8889300**	Push Switch	EVQ 11Y 07K				01
SW087	**VV439800**	Tact Switch	SKQNAJ		SONG(FF)		01
SW087	**V8889300**	Push Switch	EVQ 11Y 07K				01
SW088	**VV439800**	Tact Switch	SKQNAJ		BALANCE		01
SW088	**V8889300**	Push Switch	EVQ 11Y 07K				01
SW089	**VV439800**	Tact Switch	SKQNAJ		DIGITAL RECORDING		01
SW089	**V8889300**	Push Switch	EVQ 11Y 07K				01
SW091	**VV439800**	Tact Switch	SKQNAJ		SONG(REPEAT)		01
SW091	**V8889300**	Push Switch	EVQ 11Y 07K				01
SW094	**VV439800**	Tact Switch	SKQNAJ		SONG(EXTRA TRACKS(STYLE))		01
SW094	**V8889300**	Push Switch	EVQ 11Y 07K				01
SW096	**VV439800**	Tact Switch	SKQNAJ		SONG(TRACK 2(L))		01
SW096	**V8889300**	Push Switch	EVQ 11Y 07K				01
SW097	**VV439800**	Tact Switch	SKQNAJ		SONG(TRACK 1(R))		01
SW097	**V8889300**	Push Switch	EVQ 11Y 07K				01
SW098	**VV439800**	Tact Switch	SKQNAJ		SOUND CREATOR		01
SW098	**V8889300**	Push Switch	EVQ 11Y 07K				01
SW099	**VV439800**	Tact Switch	SKQNAJ		FUNCTION		01
SW099	**V8889300**	Push Switch	EVQ 11Y 07K				01
SW100	**VV439800**	Tact Switch	SKQNAJ		SONG(GUIDE)		01
SW100	**V8889300**	Push Switch	EVQ 11Y 07K				01
SW103	**VV439800**	Tact Switch	SKQNAJ		SONG(PERFORMANCE		01
SW103	**V8889300**	Push Switch	EVQ 11Y 07K		ASSISTANT)		01

*: New Parts

RANK: Japan only

	REF NO.	PART NO.	DESCRIPTION			REMARKS	QTY	RANK
	SW104	**VV439800**	Tact Switch	SKQNAJ		SONG(SCORE)		01
	SW104	**V8889300**	Push Switch	EVQ 11Y 07K				01
	SW107	**VV439800**	Tact Switch	SKQNAJ		SONG(KARAOKE)		01
	SW107	**V8889300**	Push Switch	EVQ 11Y 07K				01
	SW108	**VV439800**	Tact Switch	SKQNAJ		SONG(SONG SELECT)		01
	SW108	**V8889300**	Push Switch	EVQ 11Y 07K				01
	SW109	**VV439800**	Tact Switch	SKQNAJ		HELP		01
	SW109	**V8889300**	Push Switch	EVQ 11Y 07K				01
	SW145	**VV439800**	Tact Switch	SKQNAJ		MIC.(MIC SETTING/		01
	SW145	**V8889300**	Push Switch	EVQ 11Y 07K		VOCAL HARMONY)		01
	SW146	**VV439800**	Tact Switch	SKQNAJ		TEMPO(RESET,+)		01
	SW146	**V8889300**	Push Switch	EVQ 11Y 07K				01
	SW147	**VV439800**	Tact Switch	SKQNAJ		TEMPO(RESET,-)		01
	SW147	**V8889300**	Push Switch	EVQ 11Y 07K				01
	SW148	**VV439800**	Tact Switch	SKQNAJ		METRONOME(ON/OFF)		01
	SW148	**V8889300**	Push Switch	EVQ 11Y 07K				01
	SW149	**VV439800**	Tact Switch	SKQNAJ		VOLUME(FADE IN/OUT)		01
	SW149	**V8889300**	Push Switch	EVQ 11Y 07K				01
	SW170	**VV439800**	Tact Switch	SKQNAJ		STYLE(ACMP ON/OFF)		01
	SW170	**V8889300**	Push Switch	EVQ 11Y 07K				01
	SW171	**VV439800**	Tact Switch	SKQNAJ		STYLE(OTS LINK)		01
	SW171	**V8889300**	Push Switch	EVQ 11Y 07K				01
	SW172	**VV439800**	Tact Switch	SKQNAJ		STYLE(AUTO FILL IN)		01
	SW172	**V8889300**	Push Switch	EVQ 11Y 07K				01
	SW173	**VV439800**	Tact Switch	SKQNAJ		STYLE(INTRO(1))		01
	SW173	**V8889300**	Push Switch	EVQ 11Y 07K				01
	SW174	**VV439800**	Tact Switch	SKQNAJ		STYLE(INTRO(2))		01
	SW174	**V8889300**	Push Switch	EVQ 11Y 07K				01
	SW175	**VV439800**	Tact Switch	SKQNAJ		STYLE(INTRO(3))		01
	SW175	**V8889300**	Push Switch	EVQ 11Y 07K				01
	SW176	**VV439800**	Tact Switch	SKQNAJ		STYLE(MAIN VARIATION(A))		01
	SW176	**V8889300**	Push Switch	EVQ 11Y 07K				01
	SW177	**VV439800**	Tact Switch	SKQNAJ		STYLE(MAIN VARIATION(B))		01
	SW177	**V8889300**	Push Switch	EVQ 11Y 07K				01
	SW178	**VV439800**	Tact Switch	SKQNAJ		STYLE(MAIN VARIATION(C))		01
	SW178	**V8889300**	Push Switch	EVQ 11Y 07K				01
	SW179	**VV439800**	Tact Switch	SKQNAJ		STYLE(MAIN VARIATION(D))		01
	SW179	**V8889300**	Push Switch	EVQ 11Y 07K				01
	SW181	**VV439800**	Tact Switch	SKQNAJ		STYLE(BREAK)		01
	SW181	**V8889300**	Push Switch	EVQ 11Y 07K				01
	SW182	**VV439800**	Tact Switch	SKQNAJ		STYLE(ENDING/rit.(1))		01
	SW182	**V8889300**	Push Switch	EVQ 11Y 07K				01
	SW183	**VV439800**	Tact Switch	SKQNAJ		STYLE(ENDING/rit.(2))		01
	SW183	**V8889300**	Push Switch	EVQ 11Y 07K				01
	SW184	**VV439800**	Tact Switch	SKQNAJ		STYLE(ENDING/rit.(3))		01
	SW184	**V8889300**	Push Switch	EVQ 11Y 07K				01
	SW185	**VV439800**	Tact Switch	SKQNAJ		STYLE(SYNC STOP)		01
	SW185	**V8889300**	Push Switch	EVQ 11Y 07K				01
	SW186	**VV439800**	Tact Switch	SKQNAJ		STYLE(SYNC START)		01
	SW186	**V8889300**	Push Switch	EVQ 11Y 07K				01
	SW187	**VV439800**	Tact Switch	SKQNAJ		STYLE(START/STOP)		01
	SW187	**V8889300**	Push Switch	EVQ 11Y 07K				01
	SW188	**VV439800**	Tact Switch	SKQNAJ		STYLE(STYLE SELECT)		01
	SW188	**V8889300**	Push Switch	EVQ 11Y 07K				01
	SW189	**VV439800**	Tact Switch	SKQNAJ		MIXING CONSOLE		01
	SW189	**V8889300**	Push Switch	EVQ 11Y 07K				01
	SW190	**VV439800**	Tact Switch	SKQNAJ		TEMPO(TAP)		01
	SW190	**V8889300**	Push Switch	EVQ 11Y 07K				01
	TA100	**V8566600**	Transistor Array	TD62785F(EL)				05
	TA101	**V8566600**	Transistor Array	TD62785F(EL)				05
*	TA102	**WC559700**	Transistor Array	TD62309P(J)				
*	TA103	**WC559700**	Transistor Array	TD62309P(J)				
	TR100	**VY677700**	Digital Transistor	DTB123YK T146				01
	-103	**VY677700**	Digital Transistor	DTB123YK T146				01
	WH001	**--**	Connector Assembly	DS-DS 7P-120		(WC56130)		
	X0100	**WB715900**	Ceramic Resonator	CSTLS16M8X51-A0				
		WB704100	Circuit Board	SM		(X4511C0)		
	C0001	**US135100**	Ceramic Capacitor-F (chip)	0.1000 16V Z				01
	CN001	**V9028300**	Connector, FFC/FPC	52808 24P TE				02

*: New Parts

RANK: Japan only

	REF NO.	PART NO.	DESCRIPTION			REMARKS	QTY	RANK
	CN002	**WB678600**	Connector	CN015R-2313-0		3.3V CARD		07
	R0001	**RD356100**	Carbon Resistor (chip)	1.0K 63M J				01
	RA001	**RE044470**	Resistor Array	47X4				01
	-004	**RE044470**	Resistor Array	47X4				01
⚠	*	**X4857B00**	Power Transformer	UL A		U		
⚠	*	**X4862B00**	Power Transformer	IEC E		E,B,K		
⚠	*	**X4858B00**	Power Transformer	IEC/EN60691 E		N		
		WB912200	LCD	VG-S322453-1BTFWA				
⚠		**VC843500**	Push Switch	SDDLB1216A J.U.C.S		POWER		03
		AAX53660	FDD Set			U,E,B WB87400+WC52190X3		
	*	**X5026A00**	Speaker	16.0cm 6 ohm 40W		WOOFER	2	
	*	**X5146A00**	Speaker	5.0cm 16 ohm 60W		MONITOR	2	

✻: New Parts

RANK: Japan only

■ CVP-303/CVP-303M/CVP-303C BLOCK DIAGRAM

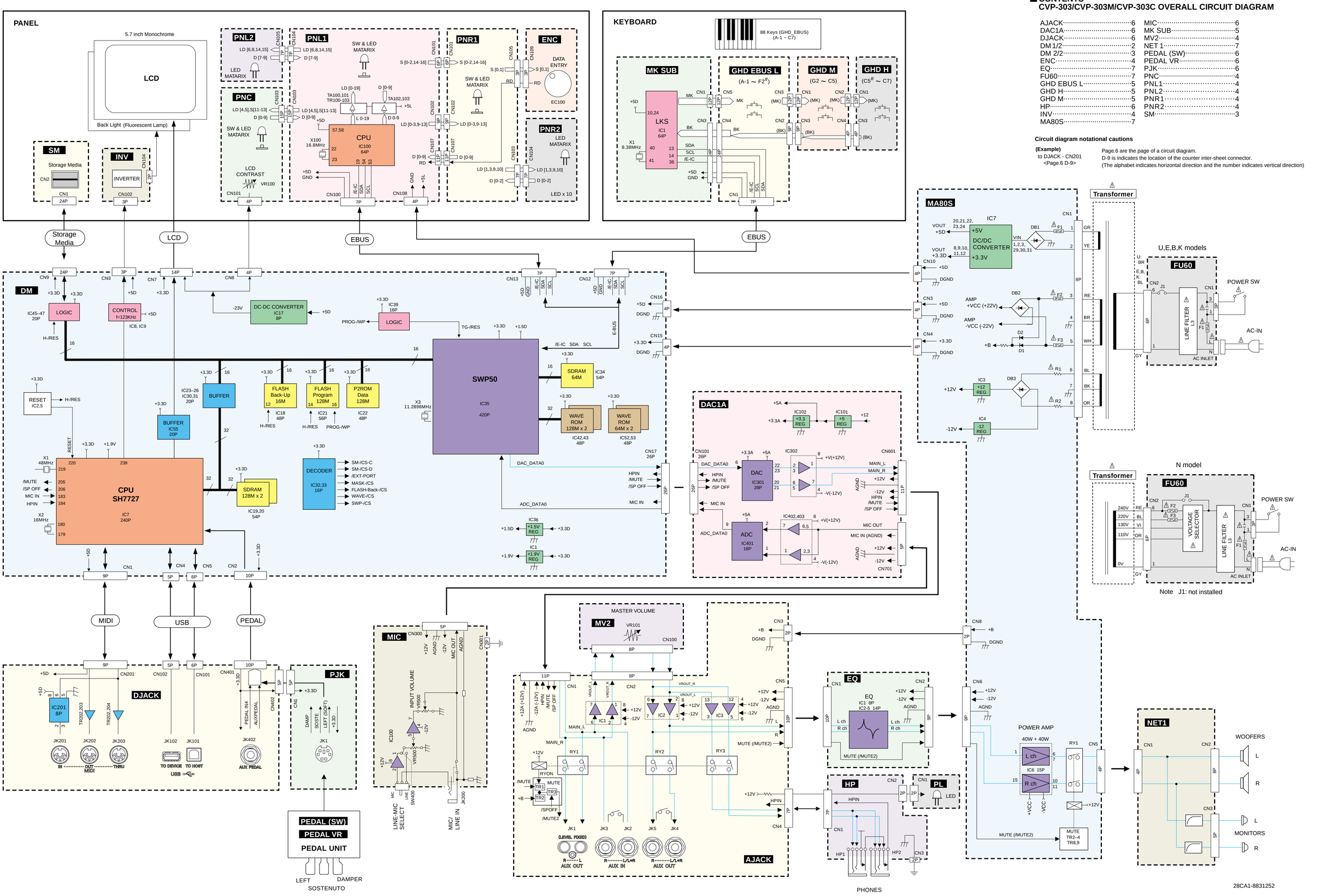

■ CONTENTS
CVP-303/CVP-303M/CVP-303C OVERALL CIRCUIT DIAGRAM

AJACK	6	MIC	6
DAC1A	6	MK SUB	5
DJACK	6	MV2	4
DM 1/2	2	NET 1	7
DM 2/2	3	PEDAL (SW)	6
ENC	4	PEDAL VR	6
EQ	7	PJK	6
FU60	7	PNC	4
GHD EBUS L	5	PNL1	4
GHD H	5	PNL2	4
GHD M	5	PNR1	4
HP	6	PNR2	4
INV	4	SM	3
MA80S	7		

Circuit diagram notational cautions

(Example)
to DJACK - CN201
<Page.6 D-9>

Page.6 are the page of a circuit diagram.
D-9 is indicates the location of the counter inter-sheet connector.
(The alphabet indicates horizontal direction and the number indicates vertical direction)

■ CVP-303/CVP-303M/CVP-303C CIRCUIT BOARD LAYOUT & WIRING

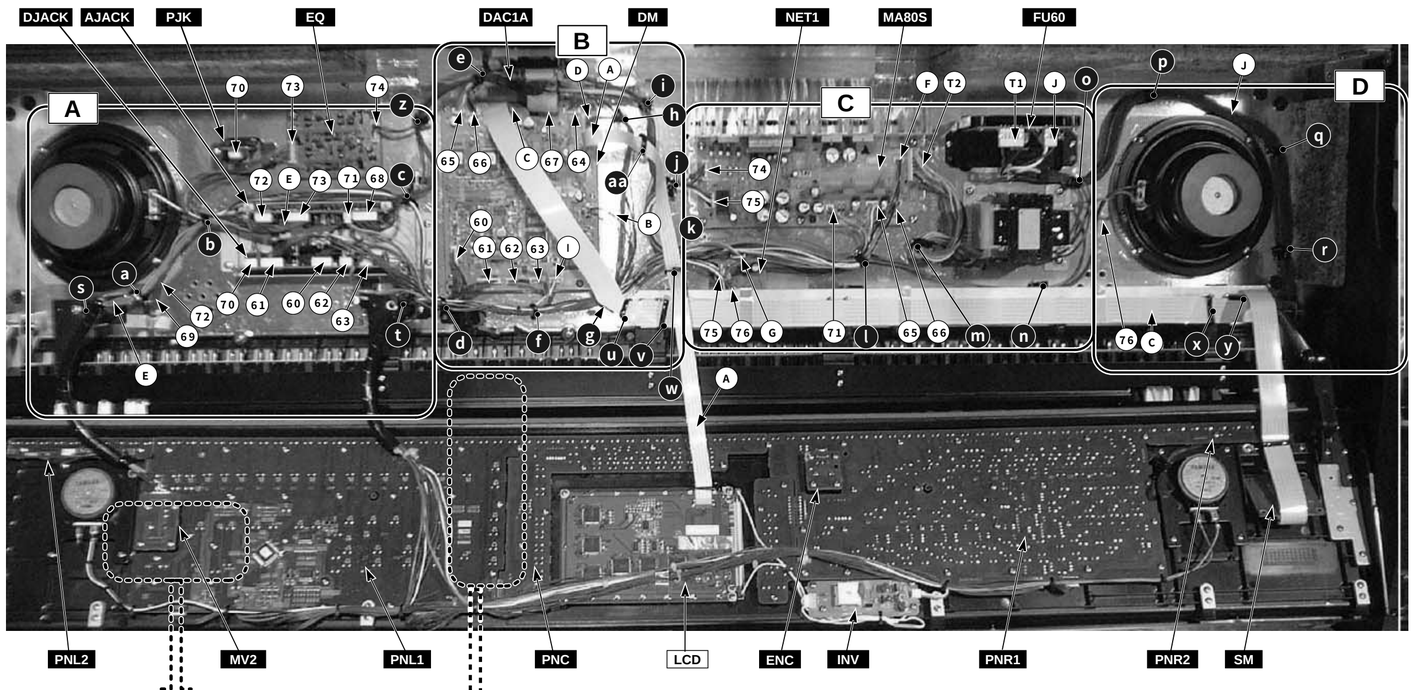

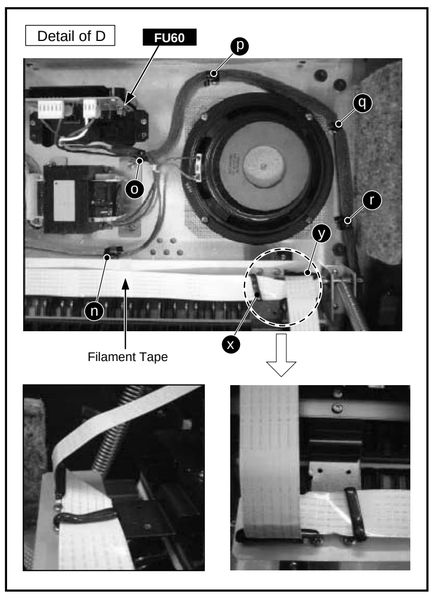

Location	Part No.	Part Name	Destination	The cord binder fixed
60	VK102800	KRD-KRD Wire Harness Assembly	DM CN1 - DJACK CN201	d
61	(VJ98270)	KRD-KRD Wire Harness Assembly	DM CN2 - DJACK CN401	d
62	(WC20240)	USB Cable	DM CN4 - DJACK CN102	d f
63	(WD22070)	USB-LF Wire Harness Assembly	DM CN5 - DJACK CN101	d f
64	(WC36550)	KB-LF Wire Harness Assembly	DM CN12 - GHD EBUS L CN1	f g h
65	(WC20320)	3D Wire Harness Assembly	DM CN15 - MA80S CN4	e i k l
66	(WC20280)	5D Wire Harness Assembly	DM CN16 - MA80S CN3	e i k l
67	WD214900 WD223100	Flexible Flat Cable	DM CN17 - DAC1A CN101	
68	VK108600	KRD-KRD Wire Harness Assembly	DAC1A CN601 - AJACK CN1	c z e
69	(VK12100)	KRD-KRD Wire Harness Assembly	DAC1A CN701 - MIC CN300	b c z e
70	(VK10250)	KRD-KRD Wire Harness Assembly	DJACK CN402 - PJK CN1	b
71	(WC20340)	+B Wire Harness Assembly	AJACK CN3 - MA80S CN8	d l q k l
72	(VK10970)	KRD-KRD Wire Harness Assembly	AJACK CN4 - HP CN1	b
73	(VJ98270)	KRD-KRD Wire Harness Assembly	AJACK CN5 - EQ CN1	b
74	VK111200	KRD-KRD Wire Harness Assembly	EQ CN2 - MA80S CN6	z e l j
75	(WC20350)	NW Wire Harness Assembly	MA80S CN5 - NET1 CN1	j k
76	(WC20360)	SP Wire Harness Assembly	NET1 CN2 - SP L/R	b c d f g k l n
77	(V340590)	Earth Wire Harness MIC	MIC CN301 - Keybed	
78	(VL50740)	Earth Wire Harness HP	HP CN3 - Keybed	
T1		Transfer Primary	Transfer - FU60 CN2	o
T2		Transfer Secondary	Transfer - MA80S CN1	m

Location	Part No.	Part Name	Destination	The cord binder fixed
A	WD194800 WD215400	Flexible Flat Cable	DM CN7 - LCD JP3	w aa
B	(WD22650)	PH4P Wire Harness Assembly	DM CN8 - PNC CN101	b d f g
C	WC193700 WD214800	Flexible Flat Cable	DM CN9 - SM CN1	u v x y
D	(WD22640)	PH7P Wire Harness Assembly	DM CN13 - PNL1 CN100	b d f g h
E	(WC20330)	VOL Wire Harness Assembly	AJACK CN2 - MV2 CN100	s a b
F	(WC36720)	PN5D Wire Harness Assembly	PNL1 CN108 - MA80S CN10	b d f g k l
G	(WC20370)	TW Wire Harness Assembly	NET1 CN3 - Mon_SP L/R	b d f g k
I	(WC20300)	INV Wire Harness Assembly	DM CN3 - INV CN102	b d f
J	WC044500	PSW Wire Harness Assembly	FU60 CN1 - Power SW	o p q r
K	VK105200	KRD-KRD Wire Harness Assembly	HP CN2 - PL CN1	

NOTE1) The parts with "( )" in "Part No." are not available as service parts.

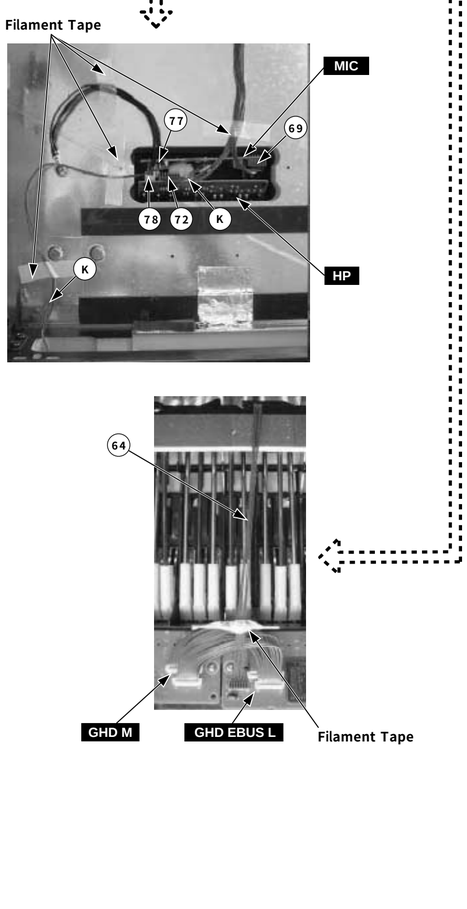

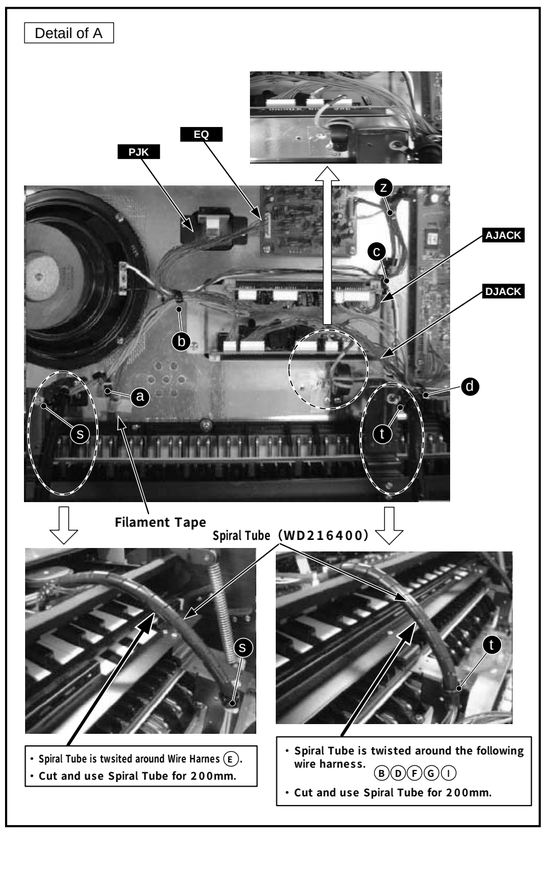

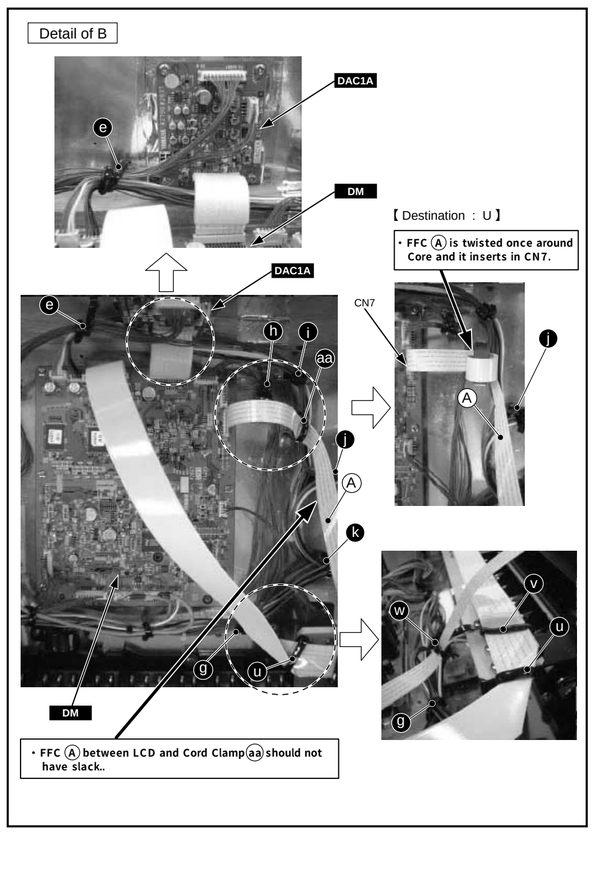

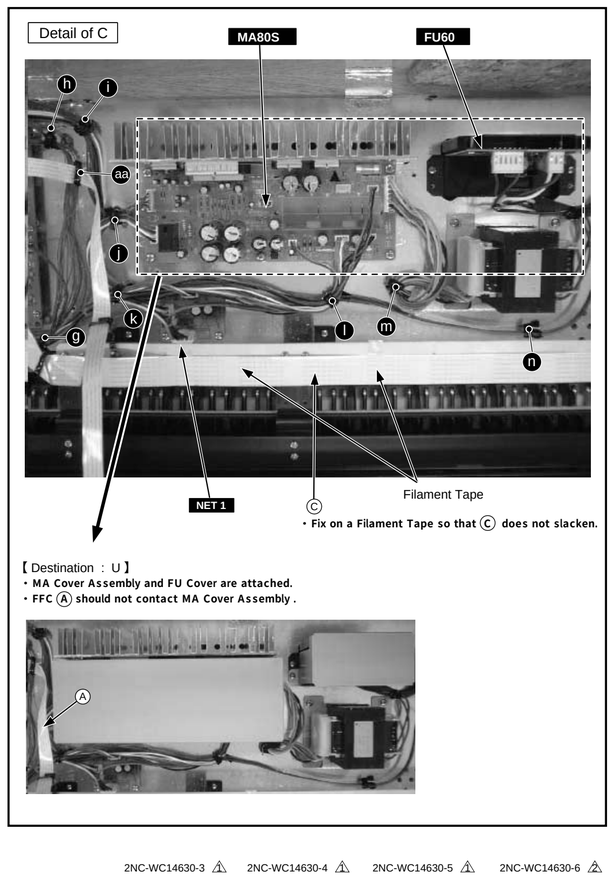

2NC-WC14630-3 ⚠1 2NC-WC14630-4 ⚠1 2NC-WC14630-5 ⚠1 2NC-WC14630-6 ⚠2

■ CVP-303/CVP-303M/CVP-303C OVERALL CIRCUIT DIAGRAM 1/6 (DM 1/2)

DM 1/2

SYSTEM RESET
INVERTER
OR
INVERTER
COMPARATOR
INVERTER
BUFFER
USB POWER SWITCH
DC-DC CONVERTER
FLASH ROM 128M (Program)
FLASH ROM 16M (Back-Up)
P2ROM (DATA)
TRANSCEIVER
SDRAM 16M
SDRAM 16M
TRANSCEIVER
TRANSCEIVER
TRANSCEIVER
TRANSCEIVER
TRANSCEIVER
DECODER
DECODER
AND
AND
CPU
TRANSCEIVER
REGULATOR
DIP Switch
SDRAM(IC19-20)

to DJACK-CN201 <Page.6 D-9>
to DJACK-CN401 <Page.6 H-11>
to INV-CN102 <Page.4 D-2>
to LCD <Page.4 F-2>
to PNC-CN101 <Page.4 P-11>
to DJACK-CN102 <Page.6 H-10>
to DJACK-CN101 <Page.6 H-9>
to DM 2/2 <Page.3 H-2>
to DM 2/2 <Page.3 K-6>
to DM 2/2 <Page.3 K-2>
to DM 2/2 <Page.3 E-2>
to DM 2/2 <Page.3 C-5>
to DM 1/2 <Page.2 J-2>
to DM 1/2 <Page.2 B-8>
to DM 2/2 <Page.3 H- 10> >
to DM 2/2 <Page.3 J-3>
to DM 2/2 <Page.3 H-3>
to DM 2/2 <Page.3 D-4>
to DM 2/2 <Page.3 D-1>

C77:Chip OS Capasitor
R8-R10:Metal Film Resistar
C6:Chip OS Capasitor
R48-R52,R917:Metal Film Resistar

• LMS8117AMP-ADJ (X0609A00) REGULATOR — TAB is Vout — 1: ADJ/GND 2: OUTPUT 3: INPUT
• 2SC2412K(VV556400) TRANSISTOR — 1: EMITTER 2: BASE 3: COLLECTOR
• 1SS372 (V9424900) DIODE ARRAY — 1: ANODE1 2: CATHODE2 3: CATHODE1, ANODE2
• D1F60 (VS201100) DIODE — 1: ANODE 2: CATHODE
• RB160M-30 (WC549600) DIODE — 1: ANODE 2: CATHODE
• 1SS355 TE-17 (VT332900) DIODE — 1: ANODE 2: CATHODE

SDRAM(IC19-20)	128M	256M
R912	NO	YES
R913	YES	NO
R914	NO	YES
R915	YES	NO
R155	NO	YES
R157	NO	YES

J/E Select	SW3
J	ON
E	OFF

###···· not installed

28CC1-8831275-1 4

CVP-303/CVP-303M/CVP-303C

■ CVP-303/CVP-303M/CVP-303C OVERALL CIRCUIT DIAGRAM 2/6 (DM 2/2, SM)

DM 2/2

- LMS8117AMP-ADJ (X0609A00) REGULATOR — TAB IS Vout — 1: ADJ/GND 2: OUTPUT 3: INPUT
- D1F60 (VS201100) DIODE — 1: ANODE 2: CATHODE

REGULATOR

IC35 LMS8117AMP-ADJ — +3.3D → +1.5D

R179-R181-Metal Film Resistar
C168-Chip OS Capasitor

DRAM 64M

IC34

SWP50

IC35

JTAG

D-FF

IC39 74LV174A

OR

IC41 74LV32U

INVERTER

IC49 74VHC14

TRANSCEIVER

IC45 74LVC245

IC46-IC47 LV-VC (7/8)

MASK ROM 128M WAVE-1L

IC42

MASK ROM 64M WAVE-2L

IC52

MASK ROM 128M WAVE-1H

IC43

MASK ROM 64M WAVE-2H

IC53

SM

3.3V CARD (SMART MEDIA)

TOP VIEW

CN15SP-2313-0 CN2

Note! ### : Not install

28CC1-8830028

to DM 1/2 <Page.2 N-12>
to DM 1/2 <Page.2 B-7>
to DM 1/2 <Page.2 D-2>
to DM 1/2 <Page.2 N-3>
to DM 1/2 <Page.2 N-5>
to DM 1/2 <Page.2 P-7>
to DM 1/2 <Page.2 P-6>
to DM 1/2 <Page.2 G-11>
to DM 1/2 <Page.2 P-8>
to DM 1/2 <Page.2 B-7>
to DM 1/2 <Page.2 G-5>
to DAC1A-CN101 <Page.6 A-2>
to GHD EBUS L-CN1 <Page.5 A-2>
to PNL1-CN100 <Page.4 H-5>
to MA80S-CN4 <Page.7 K-3>
to MA80S-CN3 <Page.7 K-3>

: not installed

28CC1-8831275-2

■ CVP-303/CVP-303M/CVP-303C OVERALL CIRCUIT DIAGRAM 3/6 (PNL(PNL1, PNL2), PNR(PNR1, PNR2, ENC), PNC(INV, MV2, PNC))

MV2

MASTER VOLUME

to AJACK-CN2 <Page.6 J-3>

28CC1-8831078 ⚠1

INV

to DM 1/2-CN3 <Page.2 E-1>

28CC1-8831078 ⚠1

LCD

to DM 1/2-CN7 <Page.2 J-1>

LCD BACK LIGHT

PNR1

VOICE: PIANO, E.PIANO, STRINGS, GUITAR & BASS, SAXOPHONE, FLUTE & WOODWIND, ORGAN, ORGAN FLUTES, VOICE EFFECT

DEMO, MUSIC FINDER

TRUMPET, BRASS, ACCORDION & HARMONICA, CHOIR & PAD, SYNTH. & FX, PERCUSSION & DRUM KIT, USER

TAB, [F], [G], [H], [!], [J], EXIT

PART SELECT: LEFT, RIGHT 1, RIGHT 2

ONE TOUCH SETTING: [1], [2], [3], [4]

PART ON/OFF: LEFT HOLD, LEFT, RIGHT 1, RIGHT 2

ENC — DATA ENTRY

ENTER, PIANO, REGIST. BANK, FREEZE, [1]–[8], MEMORY

REGISTRATION MEMORY

Keyboard guide lamps

28CC1-8831076

PNR2

Keyboard guide lamps

28CC1-8831076

PNL1

to MA80S-CN10 <Page.7 K-2>

to DM 2/2-CN13 <Page.3 O-8>

Specification of IC100
Device ID No.= 01(00)
Switch: Lo-Active
LED: Lo-Active
Drive: Hi-Active

LED DRIVER SWITCH SCAN
IC100
M38044M4-XXXFP
E-PNS1a

Transistor Array

Transistor Array

MIC SETTING/ VOCAL HARMONY, METRONOME ON/OFF, SIGNAL, OVER, MIC, FADE IN/OUT, TEMPO, TRANSPOSE, TAP, REC, STOP, PLAY/PAUSE, REW, FF, REPEAT, EXTRA TRACKS, TRACK 2 (L), TRACK 1 (R), SONG

GUIDE, PERFORMANCE ASSISTANT, SCORE, KARAOKE, SONG SELECT

HELP, FUNCTION, SOUND CREATOR, DIGITAL RECORDING, BALANCE, MIXING CONSOLE

ACMP ON/OFF, OTS LINK, AUTO FILL IN, INTRO I, INTRO II, INTRO III, MAIN VARIATION A, MAIN VARIATION B, MAIN VARIATION C, MAIN VARIATION D, BREAK, ENDING/rit. I, ENDING/rit. II, ENDING/rit. III, SYNC STOP, SYNC START, START/ STOP, STYLE SELECT

STYLE CONTROL

PNL2

Keyboard guide lamps

28CC1-8831075 ⚠2

Keyboard guide lamps

28CC1-8831075 ⚠2

PNC

[A], [B], [C], [D], [E], DIRECT ACCESS, CHANNEL ON/OFF

[1] [2] [3] [4] [5] [6] [7] [8]

Keyboard guide lamps

LCD CONTRAST

to DM 1/2-CN8 <Page.2 L-2>

28CC1-8831078 ⚠1

Note : See parts list for details of circuit board component parts.

■ CVP-303/CVP-303M/CVP-303C OVERALL CIRCUIT DIAGRAM 4/6 (GHD EBUS L, MK SUB, GHD M, GHD H)

GHD EBUS L (A-1 ~ F2#)

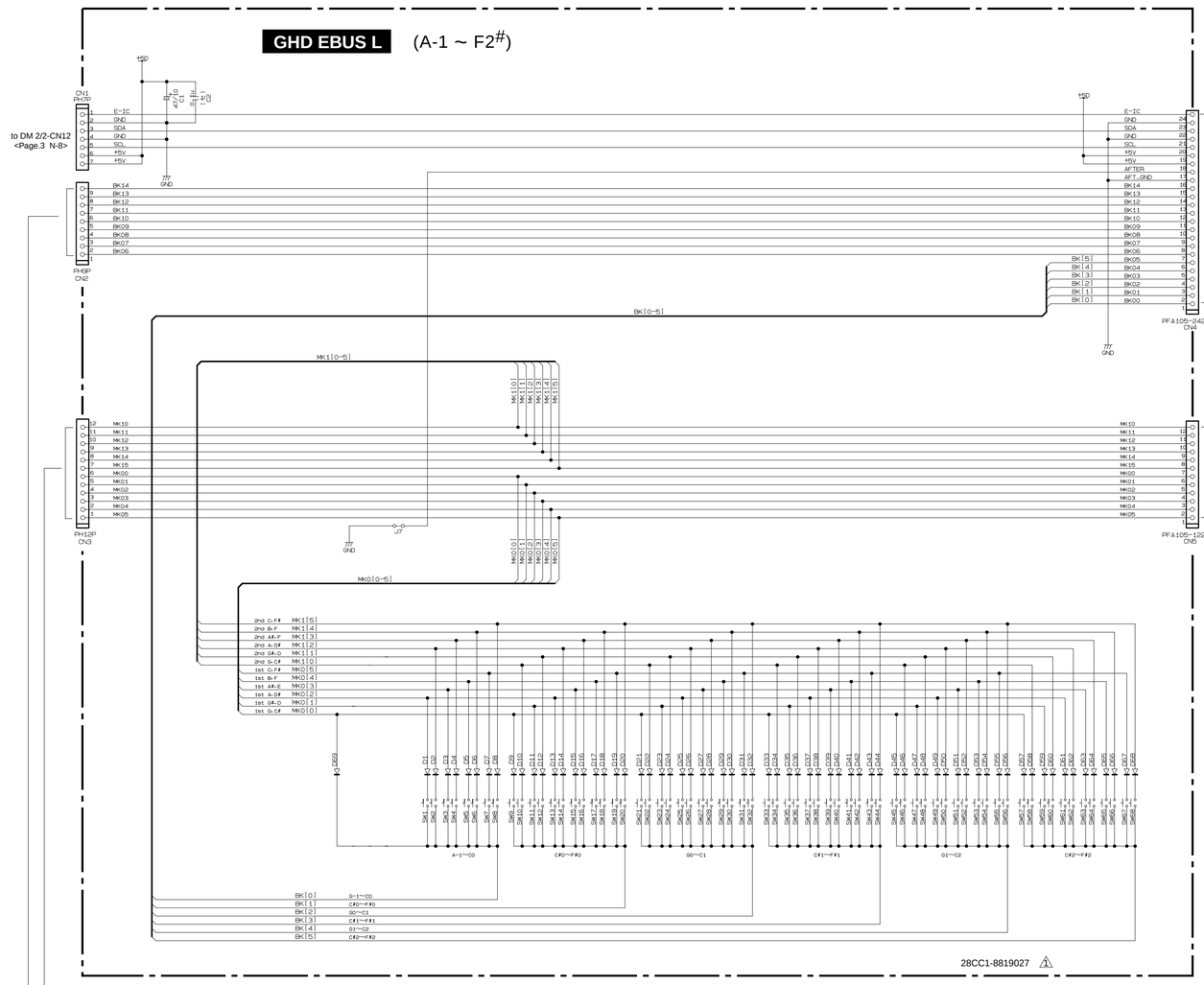

28CC1-8819027 ⚠

MK SUB

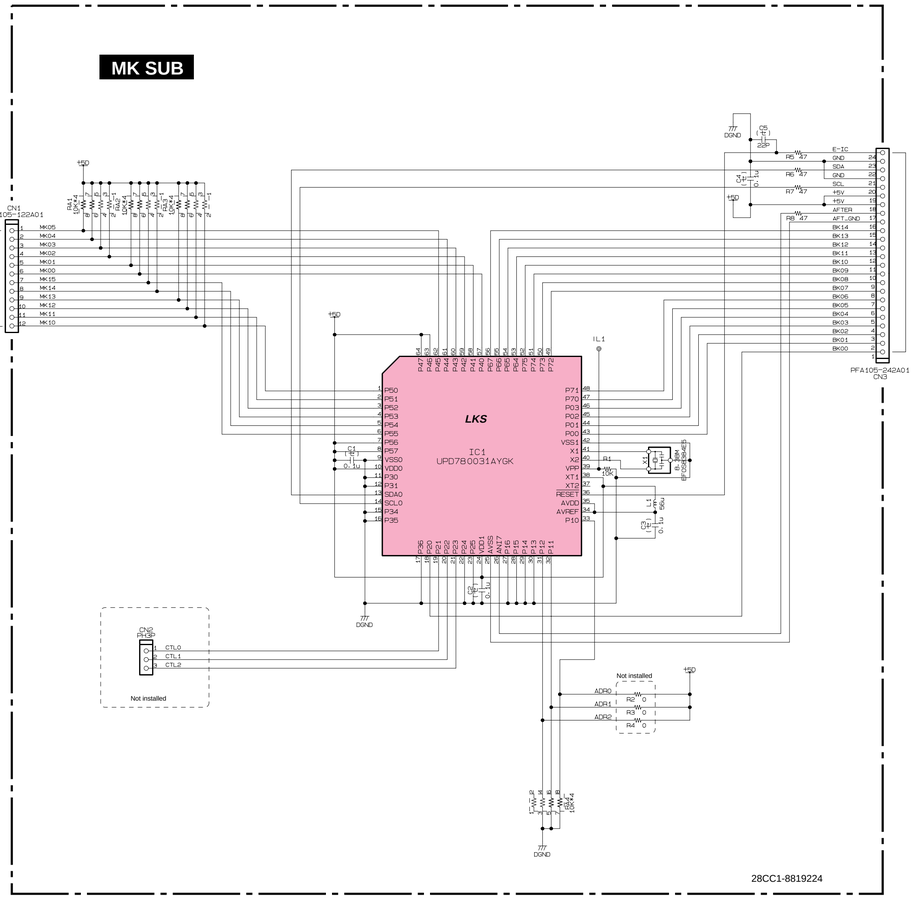

28CC1-8819224

GHD M (G2 ~ C5)

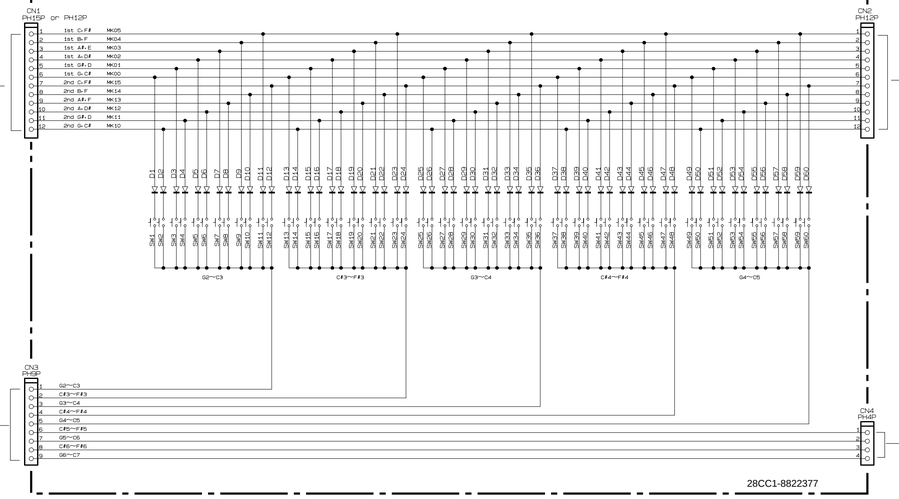

28CC1-8822377

GHD H (C5# ~ C7)

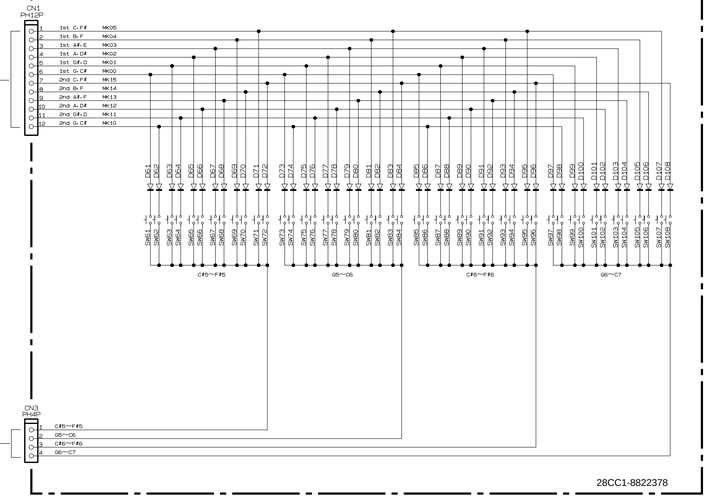

28CC1-8822378

(セ) : Ceramic Capacitor
Note : See parts list for details of circuit board component parts.

■ CVP-303/CVP-303M/CVP-303C OVERALL CIRCUIT DIAGRAM 5/6 (AJACK, DAC1A, DJACK, HP, MIC, PJK, PEDAL (SW), PEDAL VR)

(セ) : Ceramic Capacitor
Note : See parts list for details of circuit board component parts.

■ CVP-303/CVP-303M/CVP-303C OVERALL CIRCUIT DIAGRAM 6/6 (EQ, FU60, MA80S, NET1)

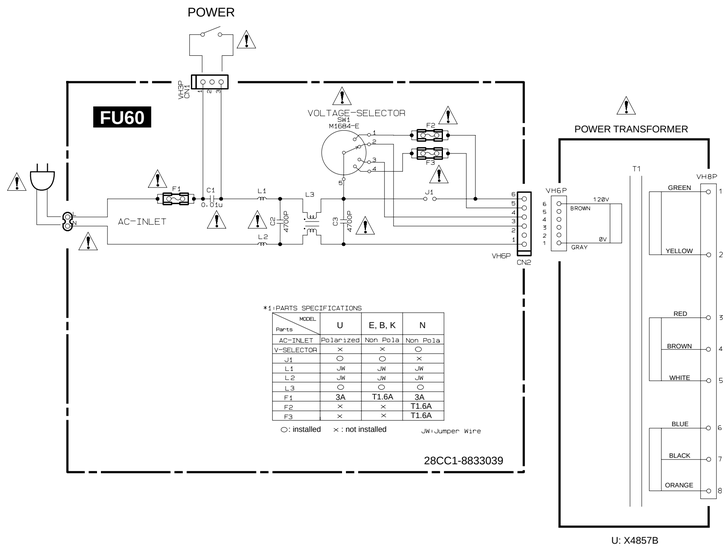

*1:PARTS SPECIFICATIONS

Parts \ MODEL	U	E, B, K	N
AC-INLET	Polarized	Non Pola	Non Pola
V-SELECTOR	×	×	○
J1	○	○	×
L1	JW	JW	JW
L2	JW	JW	JW
L3	○	○	○
F1	3A	T1.6A	3A
F2	×	×	T1.6A
F3	×	×	T1.6A

○: installed ×: not installed JW:Jumper Wire

U: X4857B

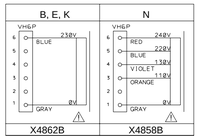

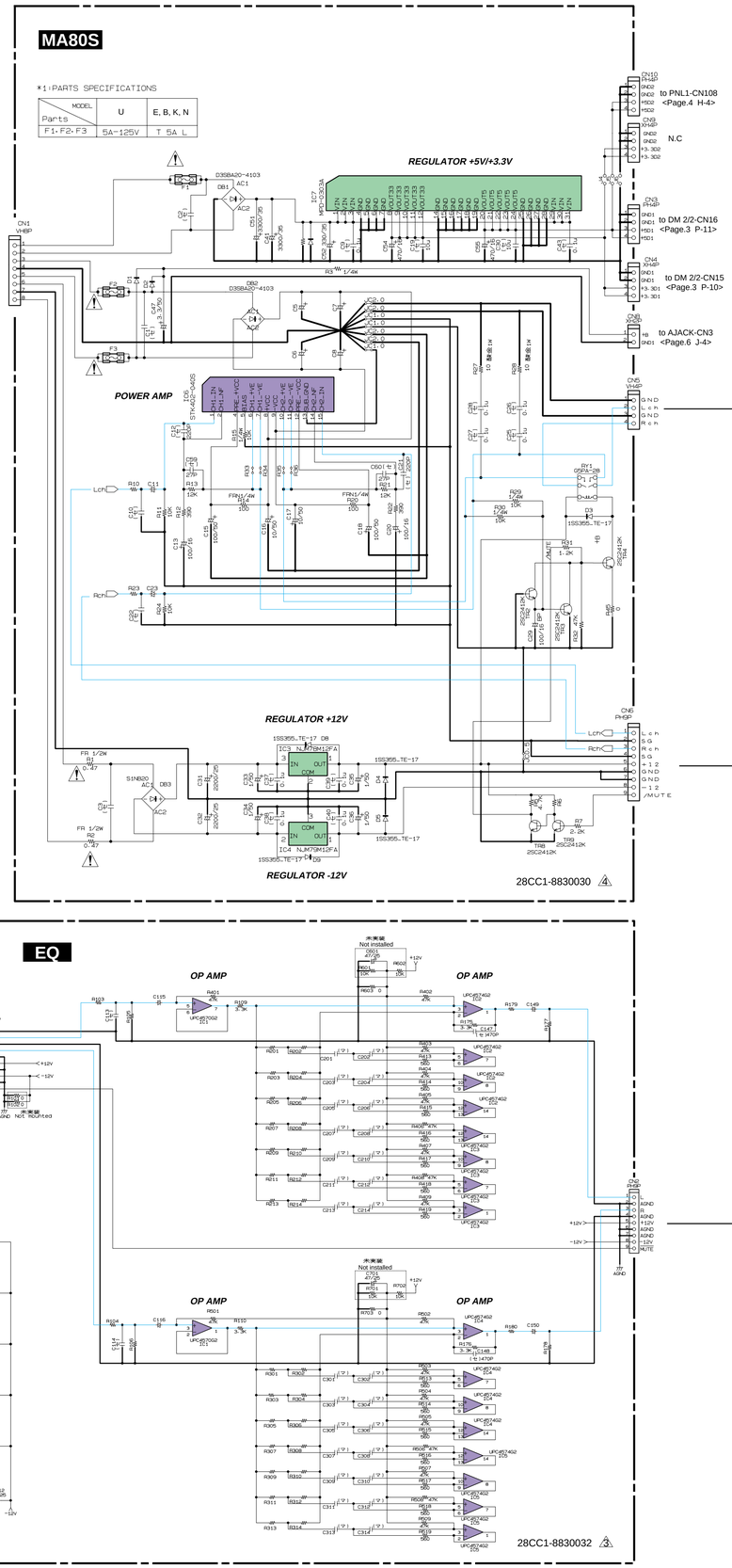

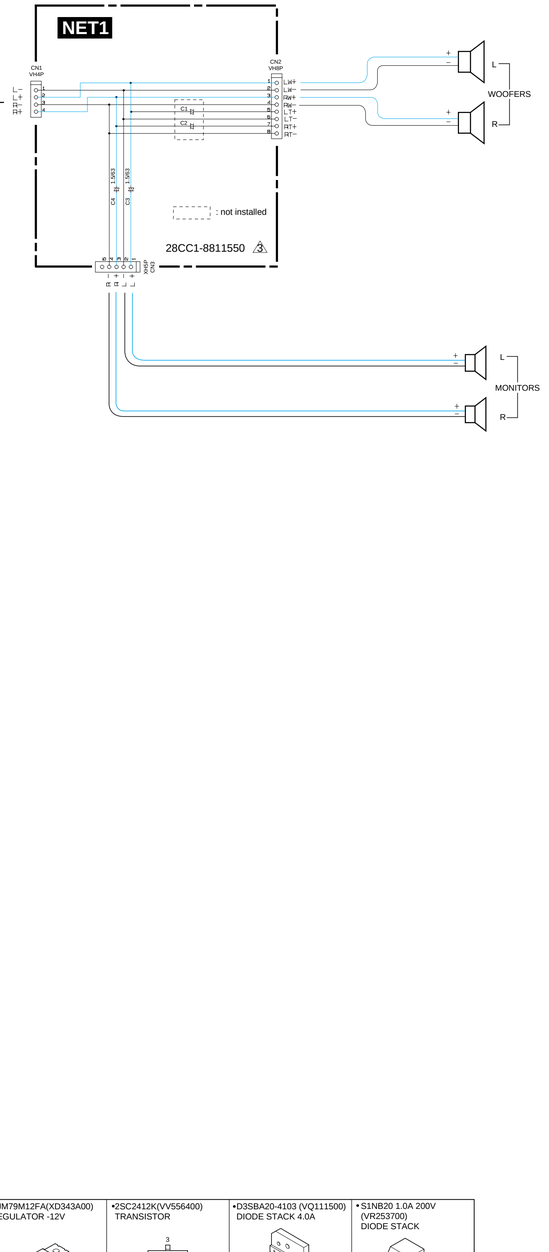

(セ): Ceramic Capacitor
(マ): Mylar Capacitor
酸金: Metal Oxide Film Resistor
Note: See parts list for details of circuit board component parts.

WARNING

Components having special characteristics are marked ⚠ and must be replaced with parts having specification equal to those originally installed.

•NJM78M12FA(XJ602A00) REGULATOR +12V	•NJM79M12FA(XD343A00) REGULATOR -12V	•2SC2412K(VV556400) TRANSISTOR	•D3SBA20-4103 (VQ111500) DIODE STACK 4.0A	•S1NB20 1.0A 200V (VR253700) DIODE STACK
1: OUTPUT 2: COMMON 3: INPUT	1: OUTPUT 2: INPUT 3: COMMON	1: EMITTER 2: BASE 3: COLLECTOR		