ELECTRIC ACOUSTIC GUITAR

SENSOR PICKUPS

SERVICE MANUAL

SYSTEM39



CPX-10



CPX-7

SYSTEM	MODELS
System39 (CR)	CPX-7
System39 (GOLD)	CPX-10

■ CONTENTS

SPECIFICATIONS 2
PANEL LAYOUT 3
OVERALL ASSEMBLY 4
ELECTRICAL PARTS 5
CIRCUIT BOARD 6
CIRCUIT DIAGRAM 6

EG **011406**

YAMAHA
HAMAMATSU, JAPAN
0.9K-361 **Printed in Japan '98.05**

IMPORTANT NOTICE

This manual has been provided for the use of authorized Yamaha Retailers and their service personnel. It has been assumed that basic service procedures inherent to the industry, and more specifically Yamaha Products, are already known and understood by the users, and have therefore not been restated.

WARNING: Failure to follow appropriate service and safety procedures when servicing this product may result in personal injury, destruction of expensive components and failure of the product to perform as specified. For these reasons, we advise all Yamaha product owners that all service required should be performed by an authorized Yamaha Retailer or the appointed service representative.

IMPORTANT: This presentation or sale of this manual to any individual or firm does not constitute authorization, certification, recognition of any applicable technical capabilities, or establish a principal-agent relationship of any form.

The data provided is belived to be accurate and applicable to the unit(s) indicated on the cover. The research engineering, and service departments of Yamaha are continually striving to improve Yamaha products. Modifications are, therefore, inevitable and changes in specification are subject to change without notice or obligation to retrofit. Should any discrepancy appear to exist, please contact the distributor's Service Division.

WARNING: Static discharges can destroy expensive components. Discharge any static electricity you body may have accumulated by grounding yourself to the ground buss in the unit (heavy gauge black wires connect to this buss.)

IMPORTANT: Turn the unit OFF during disassembly and parts replacement. Recheck all work before you apply power to the unit.

WARNING: CHEMICAL CONTENT NOTICE!

The solder used in the production of this product contains LEAD. In addition, other electrical/electronic and/or plastic (where applicable) components may also contain traces of chemicals found by the California Health and Welfare Agency (and possibly other entities) to cause cancer and/or birth defects or other reproductive harm.

DO NOT PLACE SOLDER, ELECTRICAL/ELECTRONIC OR PLASTIC COMPONENTS IN YOUR MOUTH FOR ANY REASON WHAT SO EVER!

Avoid prolonged, unprotected contact between solder and your skin! When soldering, do not inhale solder fumes or expose eyes to solder/flux vapor!

If you come in contact with solder or components located inside the enclosure of this product, wash your hands before handling food.

SPECIFICATIONS

Model : Monaural 1 Way
System : 39 (CPX)
Pickup : Piezo Pickup (Bridge)
Pre-amplifier Controls :
VOLUME, 3 BAND-EQ.,
AMF, MID SHAPE switch

Output jack : Combination end pin/power switch
Output impedance : 1 kΩ
Power supply : 9V DC, S-006P (6F22) dry cell battery
Battery life : Approx. 500 hours
Accessory : 1 hexagonal wrench

PANEL LAYOUT

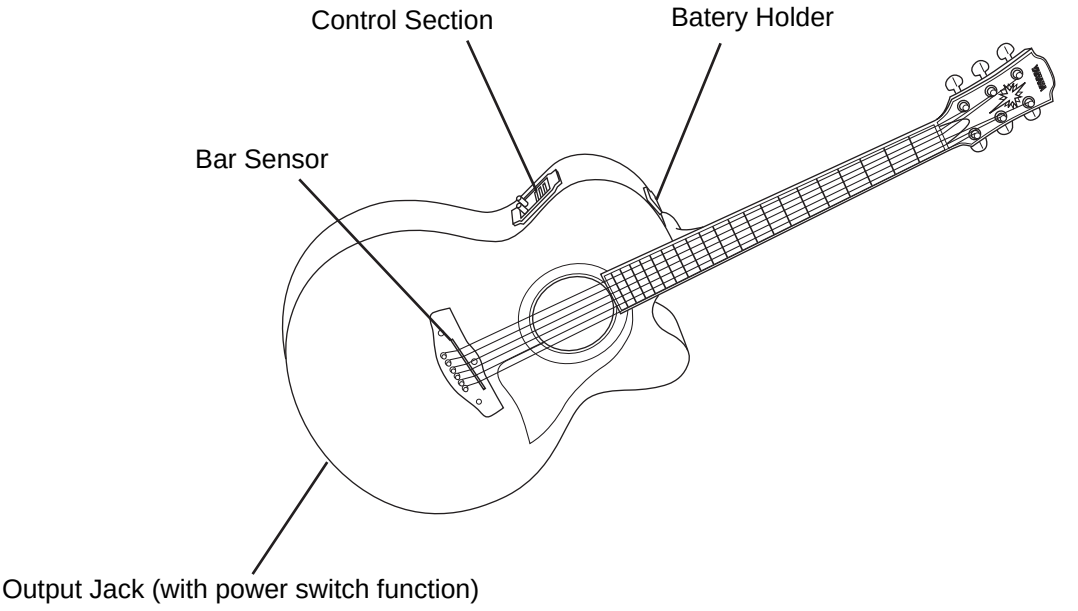

• Control Panel

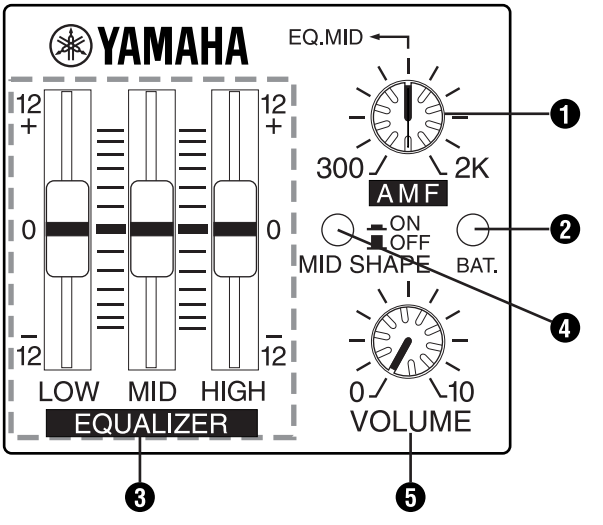

❶ AMF Control
❷ BAT.(Battery Check) Indicator
❸ EQUALIZER (LOW, MID, HIGH) Controls
❹ MID SHAPE Switch
❺ VOLUME Control

OVERALL ASSEMBLY

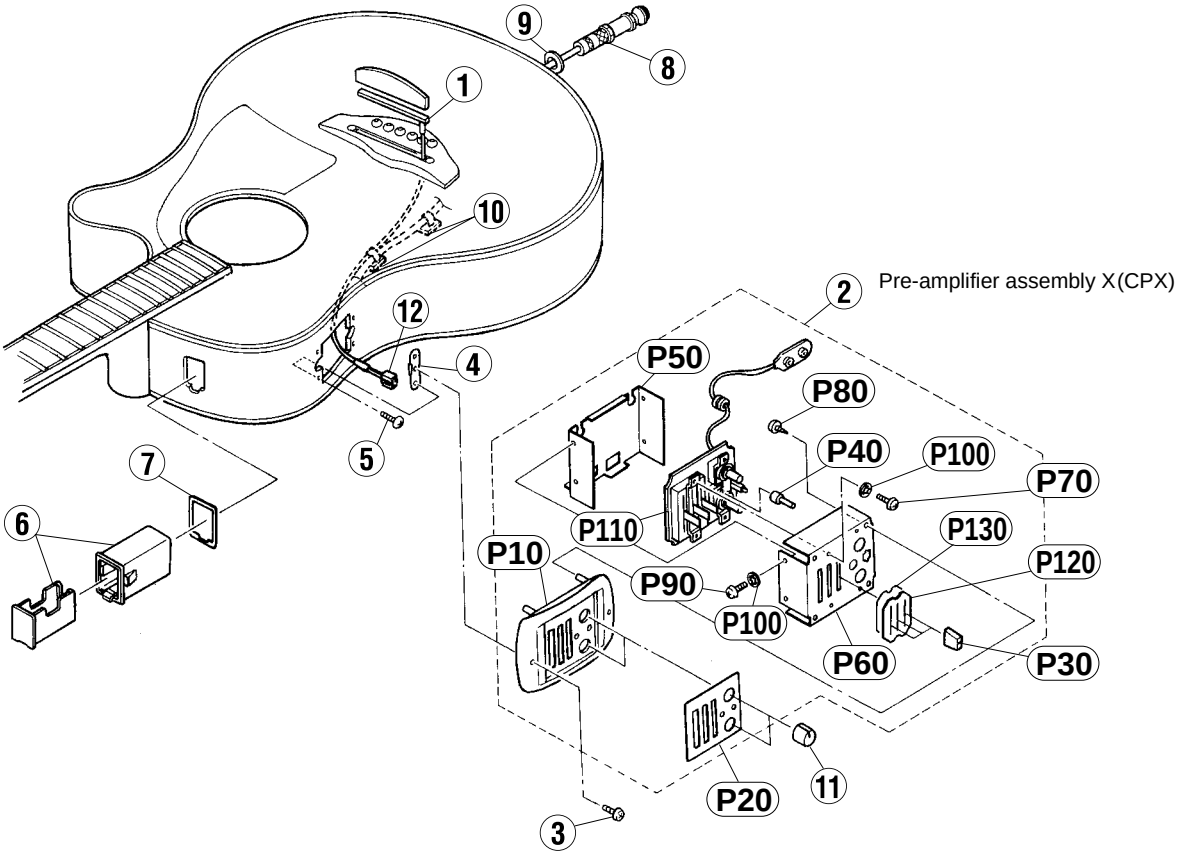

	REF NO.	PART NO.	DESCRIPTION			REMARKS	QTY	RANK
			OVERALL ASSEMBLY			SYSTEM39 (CR): CPX-7		
			OVERALL ASSEMBLY			SYSTEM39 (GOLD): CPX-10		
	1	**VS950500**	Pickup Assembly	PU-L				13
*	2	**QC413300**	Pre-amplifier Assembly	AMP-X (CPX)				
	3	**QC271600**	Pan head Screw	3.0X10 BL			2	
	4	**QC271500**	Floating Nut	0.6t			2	03
	5	**VT805400**	Truss Head Screw	2.5X6 BL			4	01
	6	**QC111900**	Battery Holder Assembly	BL				09
	7	**QC112000**	Cushion	BL				03
	8	**QC220000**	Cord with End Pin	CR		SYSTEM39 (CR): CPX-7		11
	8	**QC220100**	Cord with End Pin	GOLD		SYSTEM39 (GOLD): CPX-10		12
	9	**ET800100**	Toothed Lock Washer			End pin		01
	10	**VC668400**	Cord Clamp				2	02
	11	**QC187700**	Rotary Knob			VOLUME, AMF	2	05
	12	**LB009020**	Connector Housing	XHP-2P				01
	13	——	Sticker	CE (S)		(QC34120)		
*		**QC413300**	Pre-amplifier Assembly	AMP-X (CPX)				
*	P10	**QC450900**	Eschutcheon, Amplifier	AMP-X (CPX)				
*	P20	**QC413600**	Panel	X				
	P30	**QC200500**	Slide Knob			EQUALIZER	3	08
	P40	**QC270900**	Push Knob			MID SHAPE		02
	P50	**QC270700**	Case	Lower				04
	P60	**QC270600**	Case	Upper				04
	P70	**VT805400**	Truss Head Screw	2.5X6 BL			4	01
	P80	**QC271700**	Pan Head Tapping Screw	3.0X6 NI			4	01
	P90	**QC187900**	Bind Head Tapping Screw	3.0X5 BL			4	
	P100	**QC224900**	Toothed Lock Washer	M3.0			6	02
*	P110	**QC413400**	Circuit Board	X				
	P120	**QC289300**	Dust-proof Sheet					02
	P130	**QC289400**	Adhesive Tape					02

*: New Parts

RANK: Japan only

ELECTRICAL PARTS

	REF NO.	PART NO.	DESCRIPTION			REMARKS	QTY	RANK
			ELECTRICAL PARTS			SYSTEM39		
*		QC413400	Circuit Board	X		(QC41350)		
	IC1	XN309A00	IC	TL062CPS		OP AMP		03
	IC2	XN309A00	IC	TL062CPS		OP AMP		03
	RX1	XQ685A00	IC	RH5VL55AA		RESET		02
	LED1	VG261500	LED	ϕ 3X5 RED		BAT. indicator		01
	R1	RD256100	Carbon Resistor (chip)	1K J				01
	R2	RD259470	Carbon Resistor (chip)	4.7M J				01
	R3	RD256680	Carbon Resistor (chip)	6.8K J				01
	R4	RD257100	Carbon Resistor (chip)	10K J				01
	R5	RD257680	Carbon Resistor (chip)	68K J				01
	R6	RD257100	Carbon Resistor (chip)	10K J				01
	R7	RD254470	Carbon Resistor (chip)	47 J				01
	R8	RD257100	Carbon Resistor (chip)	10K J				01
	R9	RD256470	Carbon Resistor (chip)	4.7K J				01
	R10	RD257330	Carbon Resistor (chip)	33K J				01
	R11	RD257100	Carbon Resistor (chip)	10K J				01
	R12	RD257100	Carbon Resistor (chip)	10K J				01
	R13	RD256820	Carbon Resistor (chip)	8.2K J				01
	R14	RD256820	Carbon Resistor (chip)	8.2K J				01
	R15	RD256180	Carbon Resistor (chip)	1.8K J				01
	R16	RD256180	Carbon Resistor (chip)	1.8K J				01
	R17	RD256100	Carbon Resistor (chip)	1K J				01
	R18	RD256100	Carbon Resistor (chip)	1K J				01
	R19	RD256390	Carbon Resistor (chip)	3.9K J				01
	R20	RD257100	Carbon Resistor (chip)	10K J				01
	R21	RD258100	Carbon Resistor (chip)	100K J				01
	R22	RD256330	Carbon Resistor (chip)	3.3K J				01
	R23	RD256330	Carbon Resistor (chip)	3.3K J				01
	R24	RD258100	Carbon Resistor (chip)	100K J				01
	R25	RD256100	Carbon Resistor (chip)	1K J				01
	R26	RD256220	Carbon Resistor (chip)	2.2K J				01
	R27	RD257100	Carbon Resistor (chip)	10K J				01
	R28	RD257100	Carbon Resistor (chip)	10K J				01
	C1	UB014100	Ceramic Capacitor (chip)	0.01u K 50V				01
	C2	UB052100	Ceramic Capacitor (chip)	100p J				01
	C3	UB014180	Ceramic Capacitor (chip)	0.018u K 50V				01
	C4	UB014120	Ceramic Capacitor (chip)	0.012u K 50V				01
	C5	UB014100	Ceramic Capacitor (chip)	0.01u K				01
	C6	UF065330	Electrolytic Capacitor	0.33u 50V				01
	C7	UB014100	Ceramic Capacitor (chip)	0.01u K				01
	C8	UB014330	Ceramic Capacitor (chip)	0.033u K 50V				01
	C9	UB013120	Ceramic Capacitor (chip)	1200p K 50V				01
	C10	UB052100	Ceramic Capacitor (chip)	100p J				01
	C11	UB051470	Ceramic Capacitor (chip)	47p J				01
	C12	UB052100	Ceramic Capacitor (chip)	100p J				01
	C13	UB051220	Ceramic Capacitor (chip)	22p J				01
	C14	UB014330	Ceramic Capacitor (chip)	0.033u K 50V				01
*	C15	FX804240	Ceramic Capacitor (chip)	0.056u K 50V				
	C16	UB014100	Ceramic Capacitor (chip)	0.01u K				01
	C17	UB052100	Ceramic Capacitor (chip)	100p J				01
	C18	UB052100	Ceramic Capacitor (chip)	100p J				01
	C19	UB014100	Ceramic Capacitor (chip)	0.01u K				01
	C20	UI366100	Electrolytic Capacitor	1u 50V				01
*	C21	FX804250	Ceramic Capacitor (chip)	0.068u K 50V				
*	C22	FX804260	Ceramic Capacitor (chip)	0.15u Z 50V				
	C23	UI338100	Electrolytic Capacitor	100u 16V				01
	C24	UI338100	Electrolytic Capacitor	100u 16V				01
	VR1	HX808620	Slide Variable Resistor	RA2043-20-15C1-B54		LOW EQUALIZER 50KB		04
	VR2	HX808620	Slide Variable Resistor	RA2043-20-15C1-B54		HIGH EQUALIZER 50KB		04
	VR3	HX808630	Slide Variable Resistor	RA2043-20-15C1-B24		MID EQUALIZER 20KB		04
	VR4	QC271200	Rotary Variable Resistor	EVJ Y91 F03 B14		AMF 10KBX2		05
	VR5	QC271300	Rotary Variable Resistor	EVJ 02B F03 B14		VOLUME 10KB		05
	SW1	KX804280	Push Switch	IT-2285		MID SHAPE		02
	CN1	LB918020	Base Post Connector	B2B-XH-A		to Pickup		01
	CN2	LB918030	Base Post Connector	B3B-XH-A		to Output		01
		QC271000	Holder	A				01
*		QC271100	Holder	B				
		EA120036	Pan Head Screw	2.0X3 FNM33G		Holder B	2	01
		VT188900	LED Spacer	17.7L				02
		VR043800	Battery Snap	B-I type 250L				04
		VR047100	Bushing	KG-74				02

*: New Parts

RANK: Japan only

CIRCUIT BOARD

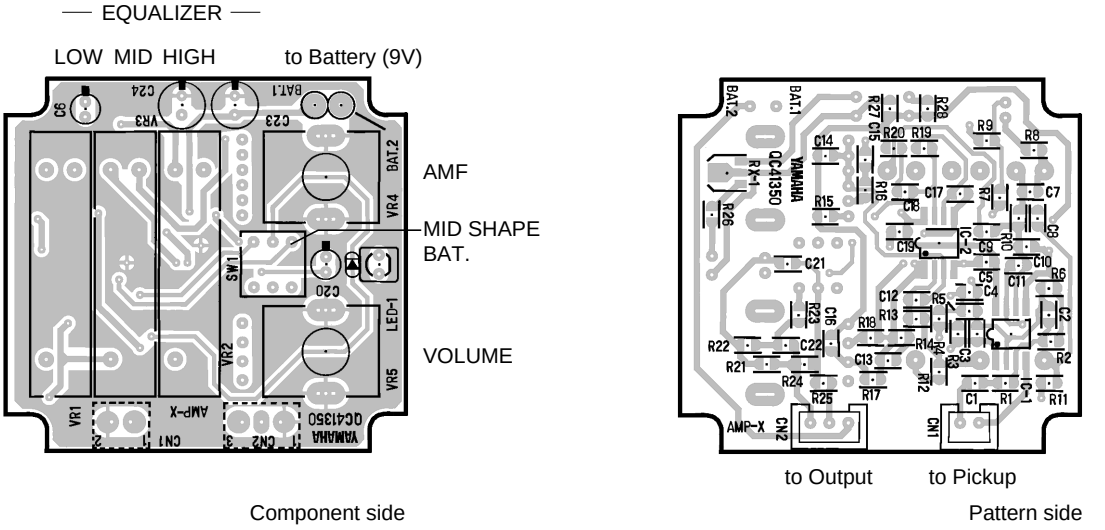

MC030-QC41340 ⚠1

CIRCUIT DIAGRAM

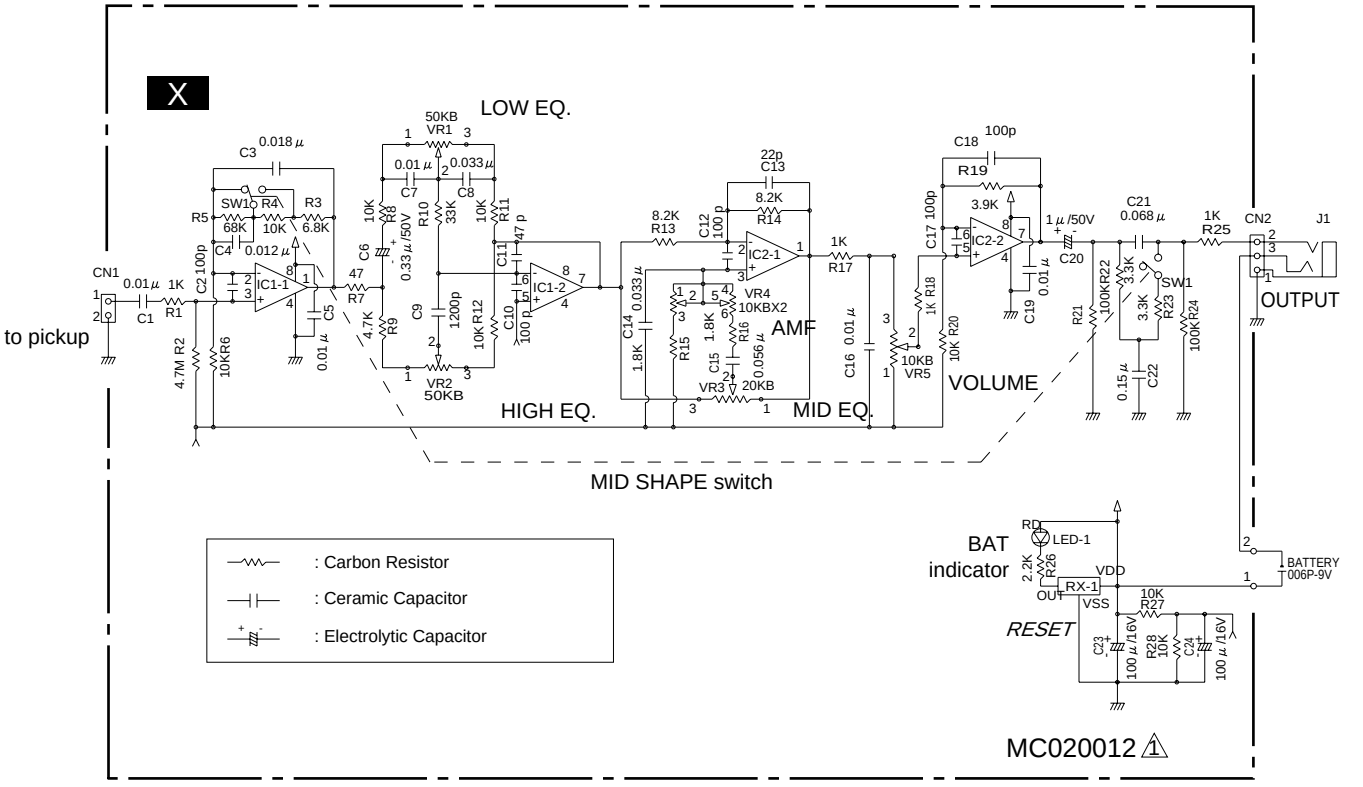

MC020012 ⚠1