Clavinova®

CLP-950/CLP-950C/CLP-950M

SERVICE MANUAL



■ **CONTENTS**

SPECIFICATIONS 3
PANEL LAYOUT 4
CIRCUIT BOARD LAYOUT 5
BLOCK DIAGRAM 6
DISASSEMBLY PROCEDURE 7
LSI PIN DISCRIPTION 14
IC BLOCK DIAGRAM 15
CIRCUIT BOARDS 17
TEST PROGRAM 21
INSPECTION 23
MIDI INPLEMENTATION CHART 24
PARTS LIST
CIRCUIT DIAGRAM

This document is printed on chlorine free (ECF) paper with soy ink.

CL 001639

YAMAHA
HAMAMATSU, JAPAN
1.33K-227 I.T Ⓘ Printed in Japan 2000.05

IMPORTANT NOTICE

This manual has been provided for the use of authorized Yamaha Retailers and their service personnel. It has been assumed that basic service procedures inherent to the industry, and more specifically Yamaha Products, are already known and understood by the users, and have therefore not been restated.

WARNING: Failure to follow appropriate service and safety procedures when servicing this product may result in personal injury, destruction of expensive components and failure of the product to per form as specified. For these reasons, we advise all Yamaha product owners that all service required should be performed by an authorized Yamaha Retailer or the appointed service repre sentative.

IMPORTANT: This presentation or sale of this manual to any individual or firm does not constitute authorization, certification, recognition of any applicable technical capabilities, or establish a principal-agent relationship of any form.

The data provided is believed to be accurate and applicable to the unit(s) indicated on the cover. The research engineering, and service departments of Yamaha are continually striving to improve Yamaha products. Modifications are, therefor, inevitable and changes in specification are subject to change without notice or obligation to retrofit. Should any discrepancy appear to exist, please contact the distributor's Service Division.

WARNING: Static discharges can destroy expensive components. Discharge any static electricity your body may have accumulated by grounding yourself to the ground bus in the unit (heavy gauge black wires connect to this bus).

IMPORTANT: Turn the unit OFF during disassembly and parts replacement. Recheck all work before you apply power to the unit.

WARNING: CHEMICAL CONTENT NOTICE!

The solder used in the production of this product contains LEAD. In addition, other electrical / electronic and / or plastic (where applicable) components may also contain traces of chemicals found by the California Health and Welfare Agency (and possibly other entities) to cause cancer and / or birth defects or other reproductive harm.

DO NOT PLACE SOLDER, ELECTRICAL / ELECTRONIC OR PLASTIC COMPONENTS IN YOUR MOUTH FOR ANY REASON WHAT SO EVER!

Avoid prolonged, unprotected contact between solder and your skin! When soldering, do not inhale solder fumes or expose eyes to solder / flux vapor!

If you come in contact with solder or components located inside the enclosure of this product, wash your hands before handling food.

■ WARNING

Components having special characteristics are marked ⚠ and must be replaced with parts having specification equal to those originally installed.

■ SPECIFICATIONS

KEYBOARD	88 KEYS (A-1~C-7)
POLYPHONY	64 NOTES MAX.
VOICES	12 voices
REVERB	ROOM, HALL 1, HALL 2, STAGE
EFFECT	CHORUS, PHASER, TREMOLO, DELAY
TOUCH SESITIVITY	HARD, MEDIUM, SOFT, FIXED
SONG CONTROLS	TRACK 1, TRACK 2, SONG [START / STOP], REC
PEDAL CONTROLS	SOFT, SOSTENUTO, DAMPER
OTHER CONTROLS	MASTER VOLUME, DEMO, TRANSPOSE, FUNCTION, METRONOME [START / STOP], TEMPO / FUNCTION [▲] / [▼], [-/NO] / [+/YES], PRESET SONG, LED Display
JACKS / CONNECTORS	PHONES x 2, AUX OUT R & L / L + R, AUX IN R & L / L + R, MIDI IN / OUT / THRU, HOST SELECT, TO HOST, PEDAL
INPUT & OUTPUT LEVEL / IMPEDANCE	AUX OUT: Output impedance 600 ohm AUX IN: Input impedance 10 kohm / Input sesitivity 0.26 V
MAIN AMPLIFIERS	60W x 2
SPEAKERS	13 cm x 2, 5 cm x 2
DIMENTIONS (W x D x H)	without music stand 1372 x 504 x 843 (54” x 19-7/8” x 33-1/4”) with music stand 1372 x 504 x 1028 (54” x 19-7/8” x 40-1/2”)
WEIGHT	68.0 kg (149.9 lbs.)

The CLP-950 / 950M / 950C PEDAL connector is not accessible from the outside of the instrument’s cabinet (it is intemally connected to the panel unit during the assembly procedure).

■ PANEL LAYOUT

● Control Panel

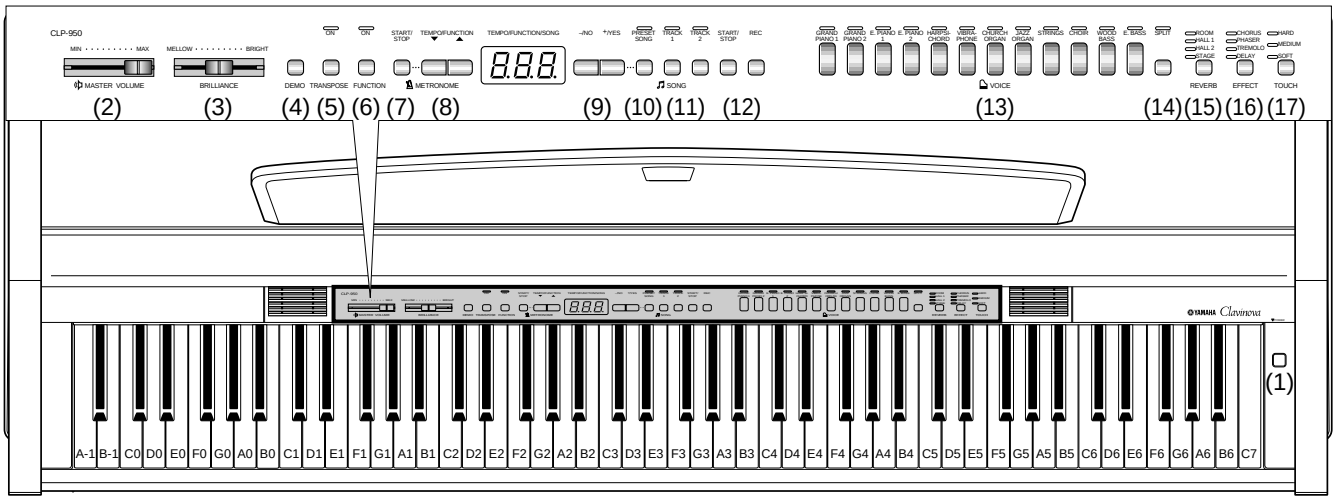

(1) [POWER] Switch
(2) [MASTER VOLUME] Control
(3) [BRILLIANCE] Control
(4) [DEMO] Button
(5) [TRANSPOSE] Button
(6) [FUNCTION] Button
(7) METRONOME [START/STOP] Button
(8) [TEMPO/FUNCTION ▼ , ▲] Buttons
(9) [-/NO], [+/YES] Buttons
(10) [PRESET SONG] Button
(11) TRACK [1] and [2] Buttons
(12) SONG [START/STOP] and [REC] Buttons
(13) Voice Selectors
(14) [SPLIT] Button
(15) [REVERB] Button
(16) [EFFECT] Button
(17) [TOUCH] Button

● Pedal

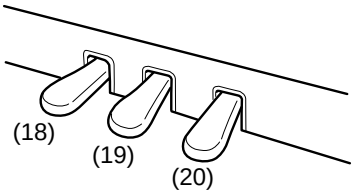

(18) Soft
(19) Sostenuto
(20) Damper

● Jack Panel

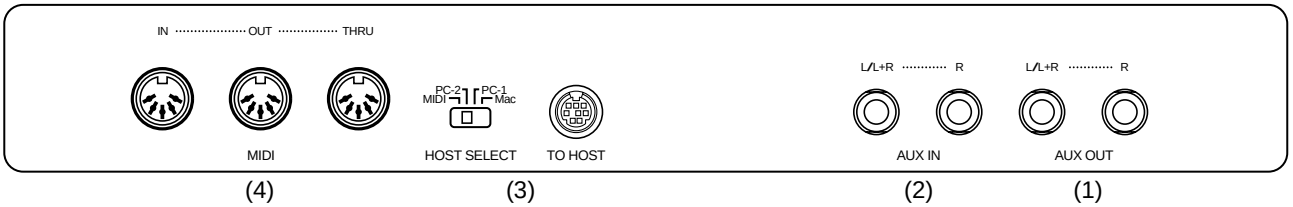

(1) AUX OUT L/L+R and R Jacks
(2) AUX IN L/L+R and R Jacks
(3) TO HOST Connector & HOST SELECT Switch
(4) MIDI IN, THRU and OUT Connectors

■ CIRCUIT BOARD LAYOUT

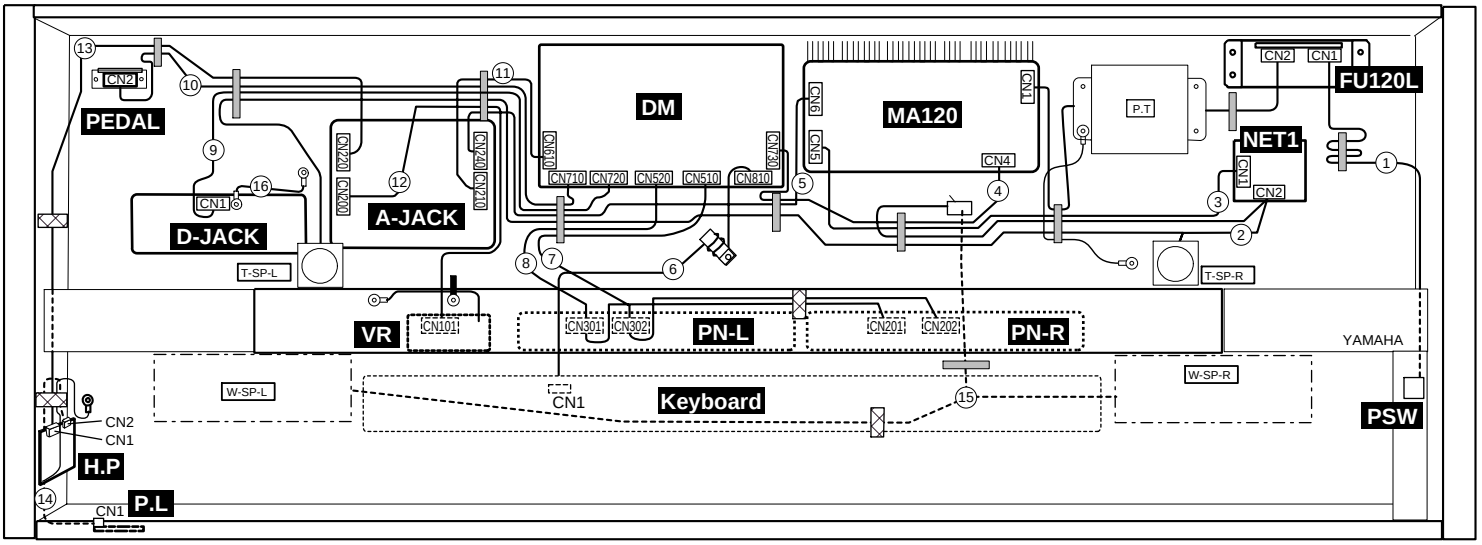

Filament Tape

Code Binder

Ferrite Core

Insulation Lock Tie

Cable Holder

Connector Direction

Ref. No.	DESTINATION			CONNECTOR NAME		PARTS LIST Ref. No.	
①	FU-120L-CN1	PSW		PSW		END BLOCK	[4]
②	NET1-CN2	T-SP-L T-SP-R		T-SP	L=200	MAIN UNIT	[26]
③	NET1-CN1	MA120-CN5		PU-NW	L=560	MAIN UNIT	[28]
④	MA120-CN4	DM-CN370		KRD-KRD	7P-L=350	MAIN UNIT	[31]
⑤	MA120-CN6	A-JACK-CN240		KRD-KRD	9P-L=500	MAIN UNIT	[30]
⑥	KBD-CN1	DM-CN810		MK-LF		MAIN UNIT	[29]
⑦	PN-R-CN202	PN-L-CN302	DM-CN510	PN2	L=550	PANEL Assembly	[18]
⑧	PN-R-CN201	PN-L-CN301	DM-CN520	PN1	L=600	PANEL Assembly	[17]
⑨	DM-CN720	D-JACK-CN1		KRD-KRD	10P-L=500	MAIN UNIT	[33]
⑩	DM-CN710	PEDAL-CN2		KRD-KRD	5P-L=600	MAIN UNIT	[32]
⑪	DM-CN610	A-JACK-CN210		KRD-KRD	11P-L=200	MAIN UNIT	[35]
⑫	VR-CN101	A-JACK-CN200		VOL	L=400	PANEL Assembly	[16]
⑬	A-JACK-CN220	HP-CN1		KRD-KRD	7P-L=700	MAIN UNIT	[27]
⑭	HP-CN2	PL-CN1		KRD-KRD	2P-L=150	FRONT RAIL	[F6]
⑮	W-SP Connector	W-SP-L W-SP-R		W-SP	(L)L=870 (R)L=720	FRONT BOARD ASSEMBLY	[5]
⑯	D-JACK-GND	Keybed GND		GND	L=100	MAIN UNIT	[36]

■ BLOCK DIAGRAM

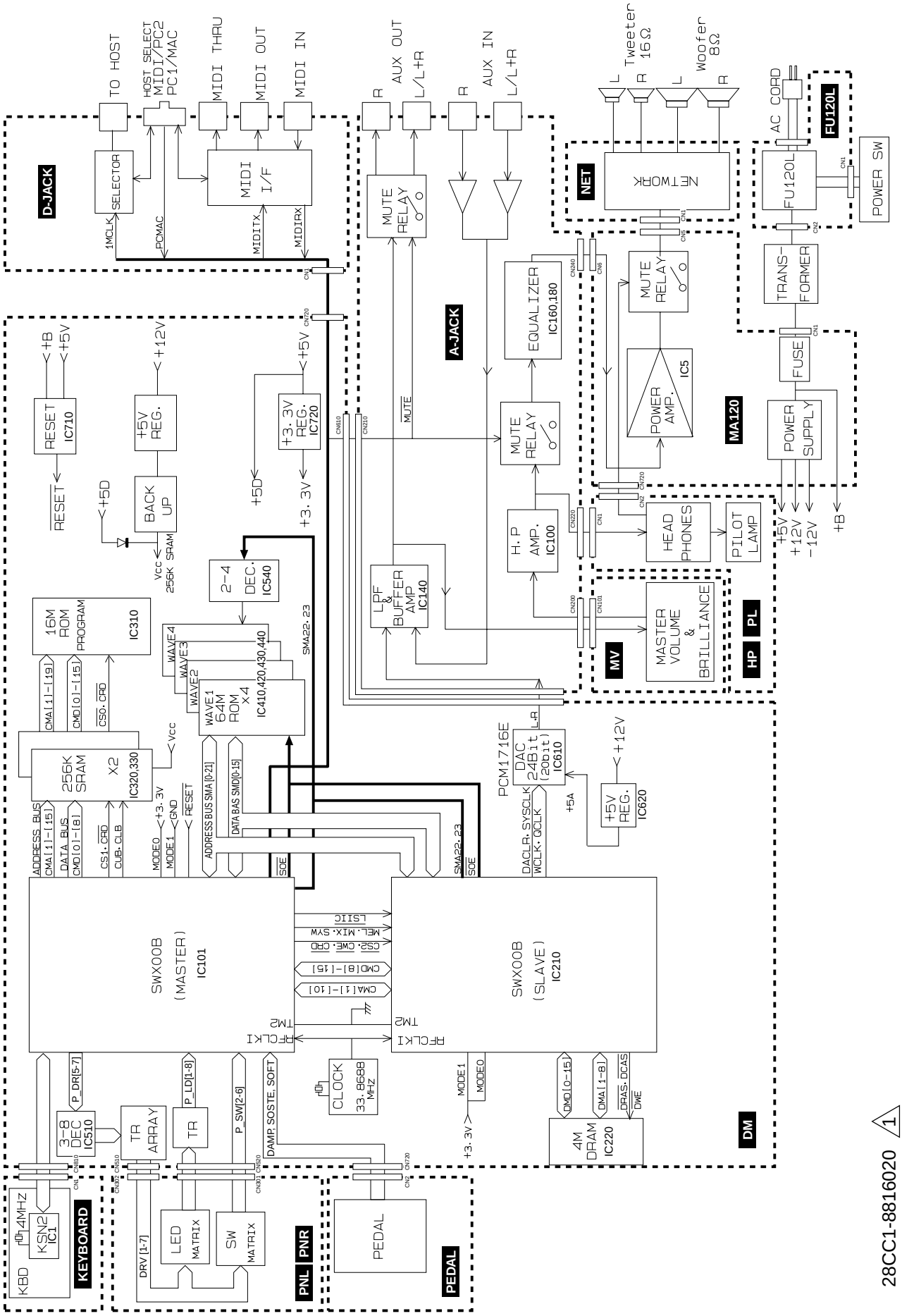

28CC1-8816020 /1

■ DISASSEMBLY PROCEDURE

1 Top Board Assembly

Remove the three (3) screws marked [48], hold the top board with both hands, slide it to the front, and then lift it up. (Fig. 1)

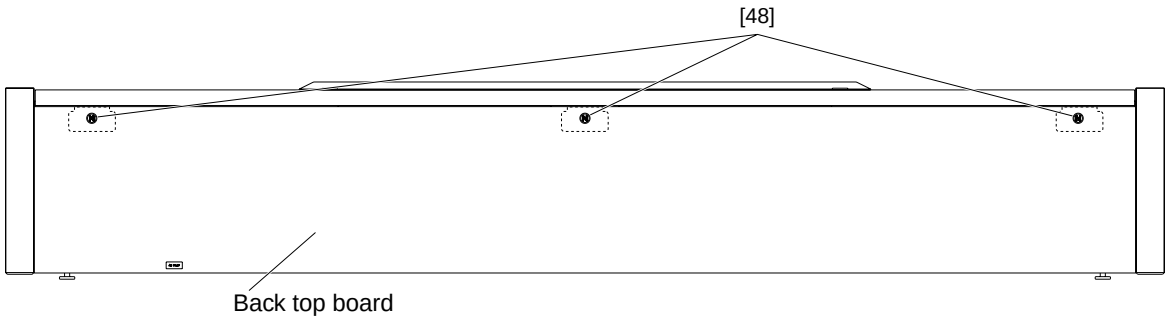

(Fig. 1)

2 Circuit Boards

After removing the Top Board Assembly, remove the following screws. Each circuit board can then be removed. (Fig. 2)

Circuit Board and Unit	Ref.No.	Screw		Qty
DM	47	Bind Head Tapping Screw-B 3.0X8 MFZN2BL	(EP600190)	4
FU120	40a	Bind Head Tapping Screw-1 3.5X12 MFZN2BL	(EP030340)	2
MA120	40b	Bind Head Tapping Screw-1 3.5X12 MFZN2BL	(EP030340)	2
PK	40c	Bind Head Tapping Screw-1 3.5X12 MFZN2BL	(EP030340)	2
A-JACK	4a	Bind Head Tapping Screw-B 3.0X8 MFZN2BL	(EP600190)	4
D-JACK*[1]	4b	Bind Head Tapping Screw-B 3.0X8 MFZN2BL	(EP600190)	5
NET	49	Bind Head Tapping Screw-1 3.5X20 MFZN2Y	(EP030470)	4
POWER TRANSFOMER	51	Bind Head Tapping Screw-B 4.0X10 MFZN2BL	(EP600240)	4
SPEAKER ASSEMBLY	40c	Bind Head Tapping Screw-1 3.5X12 MFZN2BL	(EP030340)	4

[1] After removing the A-JACK circuit board.

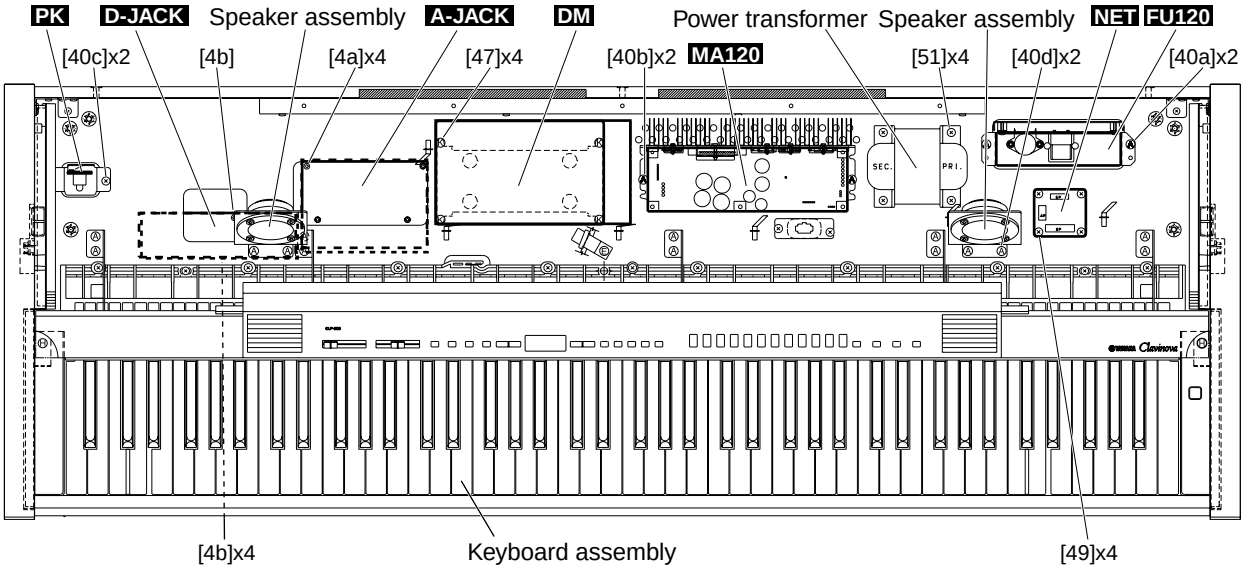

(Fig. 2)

3 Key Cover Assembly

3-1 Remove the top board assembly. (See procedure 1.)

3-2 Remove the two [2] screws marked [47b]. The rack cover can then be removed. (Fig. 3)

3-3 Set the left end of the rot at the slits of the guide and then lift the key cover assembly.

3-4 Lean slightly the key cover assembly so that the rot can be removed from the guide rail.
When removing, be sure not to make scratches on the sideboard. (Fig. 4)

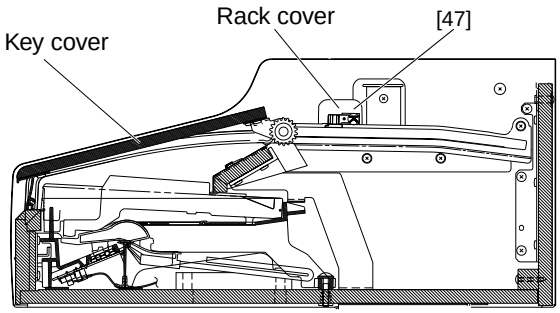

(Fig. 3)

4 Control Panel Assembly

4-1 Remove the top board assembly. (See procedure 1.)

4-2 Remove the key cover assembly. (See procedure 3.)

4-3 Remove the ten (10) screws marked [40e] and the screw marked [51]. The control panel assembly can then be removed. (Fig. 5)

* ***To remove these units, remove the screws listed below. (Fig. 5)***

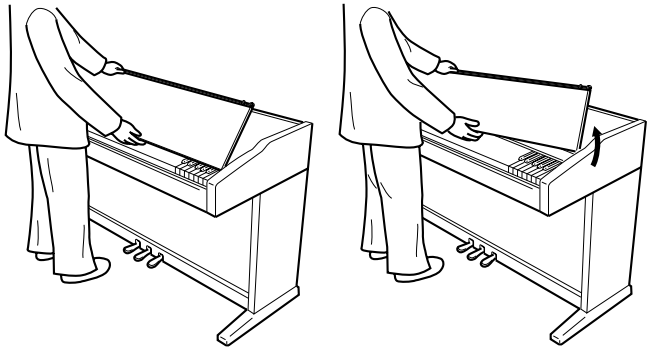

(Fig. 4)

Circuit Board and Unit	Ref.No.	Screw		Qty
PNR	19a	Bind Head Tapping Screw-B 3.0X8 MFZN2Y	(EP600250)	8
PNL	19b	Bind Head Tapping Screw-B 3.0X8 MFZN2Y	(EP600250)	8
MV	19c	Bind Head Tapping Screw-B 3.0X8 MFZN2Y	(EP600250)	4

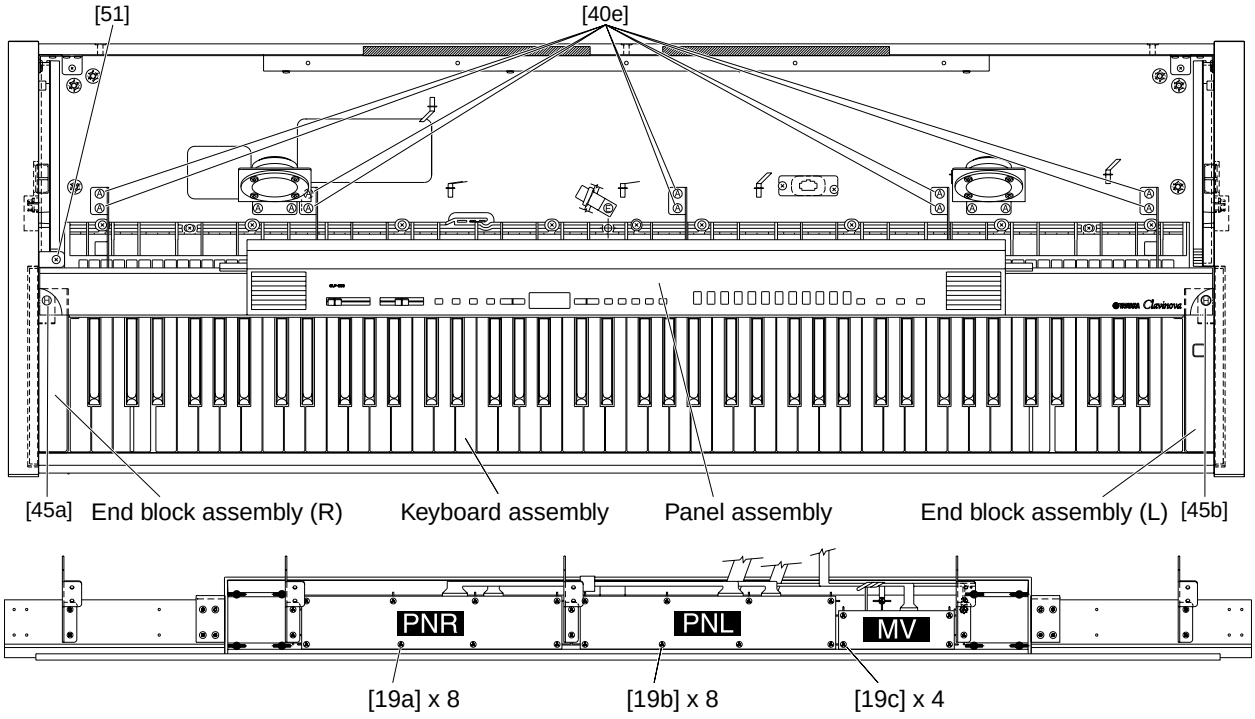

(Fig. 5)

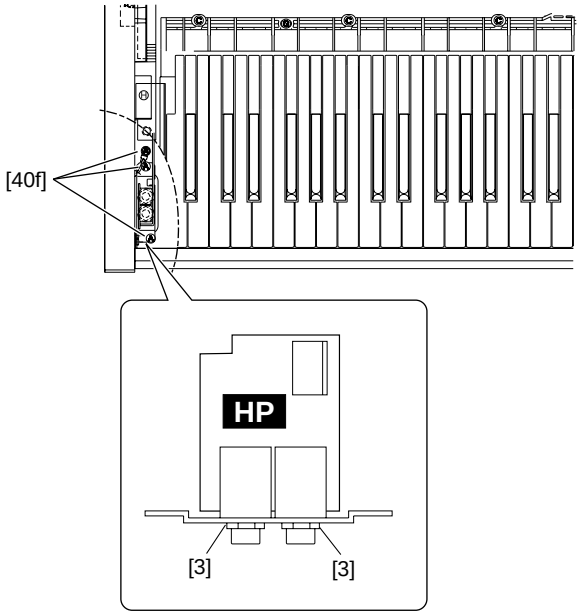

(Fig. 6)

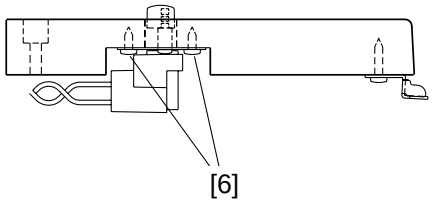

(Fig. 7)

5 HP Circuit Board

5-1 Remove the top board assembly. (See procedure 1.)
5-2 Remove the key cover assembly. (See procedure 3.)
5-3 Remove the control panel assembly. (See procedure 4-3.)
5-4 Remove the screw marked [45a]. The left end block assembly can then be removed. (Fig. 5)
5-5 Remove the three (3) screws marked [40f]. The headphones jack Assembly can then be removed. (Fig. 6)
5-6 Remove the two (2) nuts marked [3]. The phone jack holder can then be removed from HP circuit board. (Fig. 6)

6 PSW Assembly

6-1 Remove the top board assembly. (See procedure 1.)
6-2 Remove the key cover assembly. (See procedure 3.)
6-3 Remove the control panel assembly. (See procedure 4-3.)
6-4 Remove the screw marked [45b]. The right end block assembly can then be removed. (Fig. 5)
6-5 Remove the two (2) screws marked [6]. The power switch assembly can then be removed. (Fig. 7)

7 Keyboard assembly

7-1 Remove the top board assembly. (See procedure 1.)
7-2 Remove the key cover assembly. (See procedure 3.)
7-3 Remove the control panel assembly. (See procedure 4-3.)
7-4 Remove the left end block assembly. (See procedure 5-4.)
7-5 Remove the right end block assembly. (See procedure 6-4.)
7-6 Remove the nine (9) screws marked [42] and the two (2) screws marked [44]. The keyboard assembly can then be removed. (Fig. 8)

* ***Slide the keyboard unit backward, lift the front side at the center of the frame, and rise up the GH keyboard assembly to remove.***
* ***Removing the GH keyboard assembly without rising up can cause the keyboard unit twisted and the frame can be damaged.***
* ***When reinstalling, fasten the screw marked [44], then the screw marked [42].***

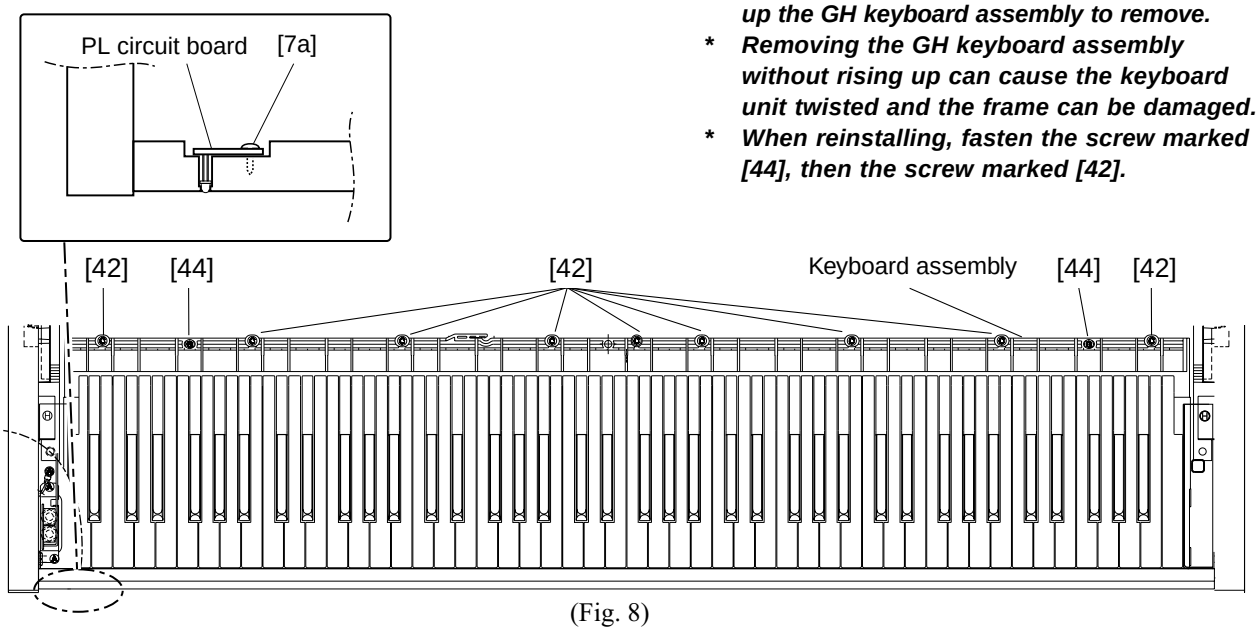

(Fig. 8)

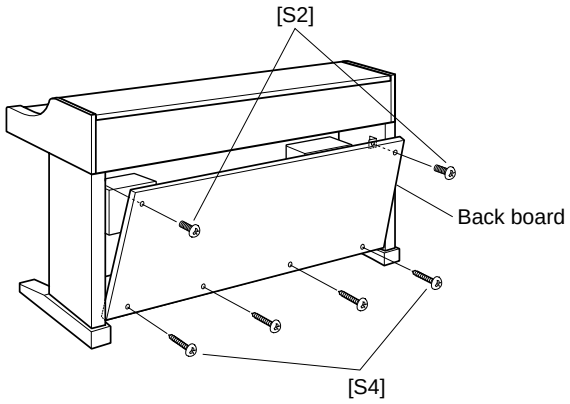

(Fig. 9)

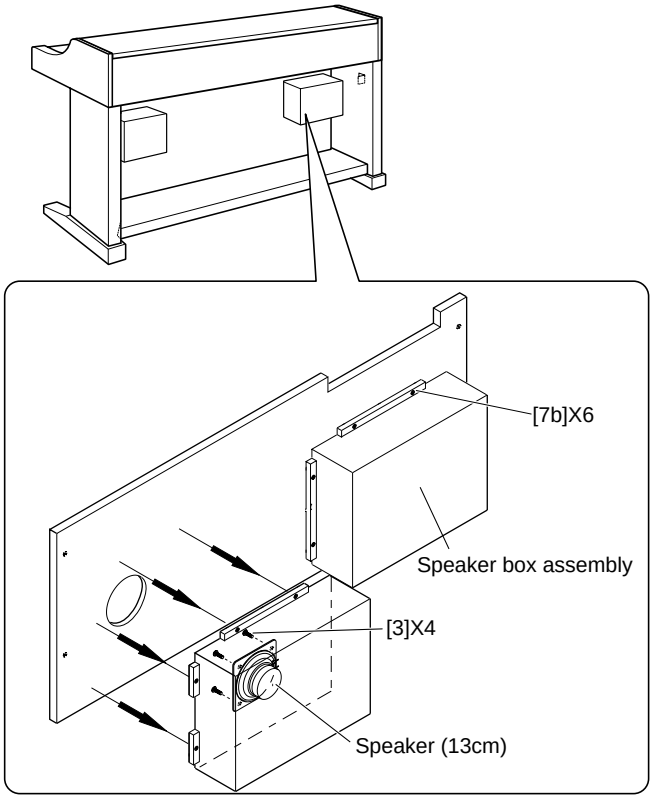

(Fig. 10)

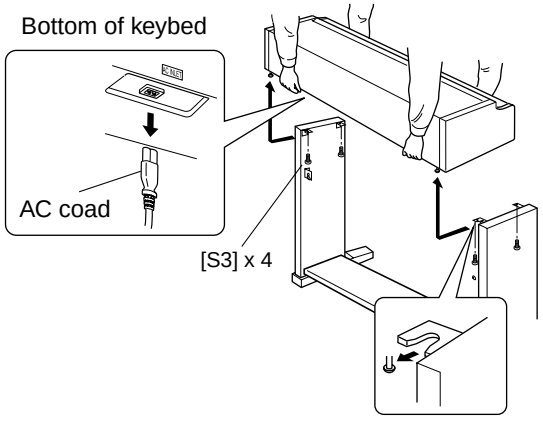

(Fig. 11)

8 PL Circuit Board

8-1 Remove the top board assembly. (See procedure 1.)
8-2 Remove the key cover assembly. (See procedure 3.)
8-3 Remove the control panel assembly. (See procedure 4-3.)
8-4 Remove the keyboard assembly. (See procedure 8.)
8-5 Remove the screw marked [7a]. The PL circuit board can then be removed. (Fig. 8)

9 BackBoard Set

Remove the two (2) screws marked [S2] and the four (4) screws marked [S4]. The Backboard set can then be removed. (Fig. 9)

10 Speaker (13cm)

10-1 Remove the backboard set. (See procedure 9.)
10-2 Remove the six (6) screws marked [7b]. The speaker box assembly can then be removed. (Fig. 10)
10-3 Remove the four (4) screws marked [3]. The speaker can then be removed. (Fig. 10)

* ***The removing procedures for left and right speaker are same.***

11 Main Unit

11-1 Disconnect the PK cable. (Fig. 13)
11-2 Disconnect the AC cord. (Fig. 11)
11-3 Remove the four (4) screws marked [S3]. Lift the main unit up slightly and then slide it to backward and then lift it up. (Fig. 11)

* ***Be sure to place your hands at least 15cm from either end of the main unit and take care not to pinch your fingers when removing it.***

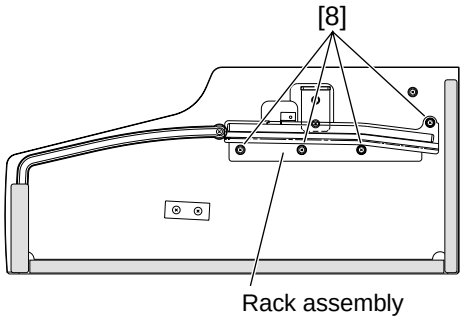

(Fig. 12)

12 Rack Assembly

12-1 Remove the top board assembly. (See procedure 1.)
12-2 Remove the key cover assembly. (See procedure 3.)
12-3 Remove the control panel assembly. (See procedure 4-3.)
12-4 Remove the keyboard assembly. (See procedure 7.)
12-5 Remove the six (6) screws marked [8]. The Rack assembly can then be removed. (Fig. 12)

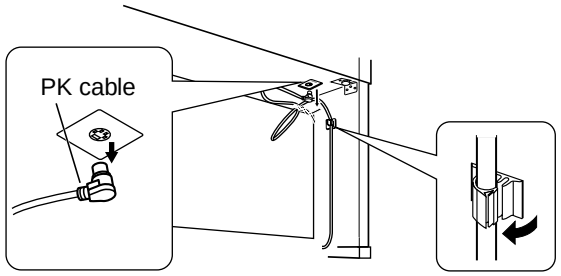

(Fig. 13)

13 Pedal Assembly

13-1 Disconnect the PK cable. (See procedure 11-1.)
13-2 Place the back of the unit on a soft blanket.
13-3 Remove the eight (8) screws marked [7b]. The pedal assembly can then be removed. (Fig. 14)

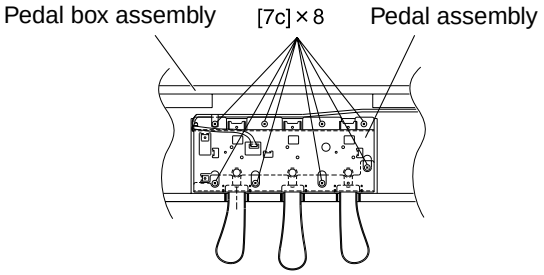

(Fig. 14)

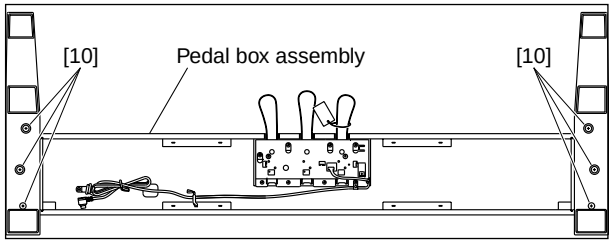

(Fig. 15)

14 Stand Base Assembly

14-1 Place the back of the unit on a soft blanket.
14-2 Remove the three (3) screws marked [10]. The stand base assembly can then be removed. (Fig. 15)

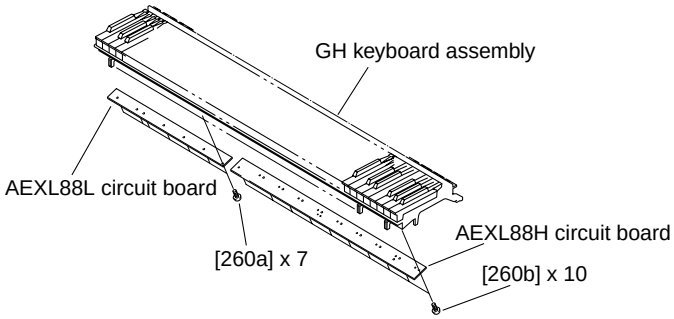

(Fig. 16)

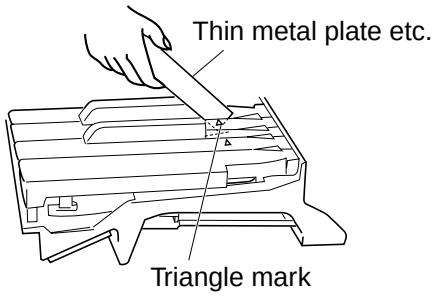

(Fig. 17)

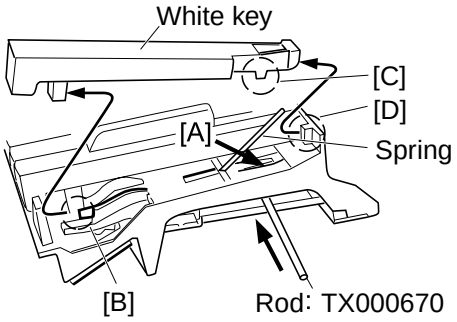

(Fig. 18)

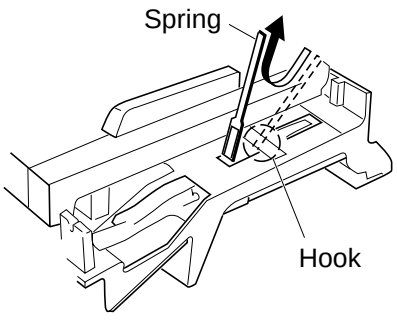

(Fig. 19)

15 Disassembling the GH Keyboard

**** After inserting a round stick (Rod: TX000670) between the frame and keys, remove the circuit boards.***

15-A AEXL88-L circuit board

Remove the seven (7) screws marked [260a]. The AEXL88-L circuit board can then be removed. (Fig. 16)

15-B AEXL88-H circuit board

Remove the ten (10) screws marked [260b]. The AEXL88-H circuit board can then be removed. (Fig. 16)

**** Keys can be removed without removing the circuit boards.***

15-C White Key

Insert a thin plate between the white keys, near the triangle mark around the fulcrum of the key, and press down the stopper marked [A] to remove the key. (Fig. 17, 18)

**** Take care not to damage the key spring when removing a key.***

**** A black key can be removed after both adjacent white keys have been removed.***

15-D Hammer, White Key

After a key has been removed, push the key spring down once to take it out of the hook. (Fig. 19) Place the GH keyboard assembly upside down and peel away then stopper L88. The hammer of the white key can then be removed. (Fig. 20)

**** The hammer of a black key can be removed in the same manner.***

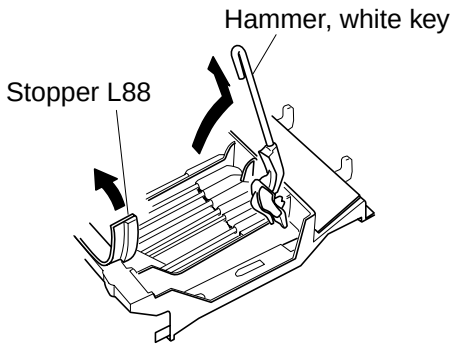

(Fig. 20)

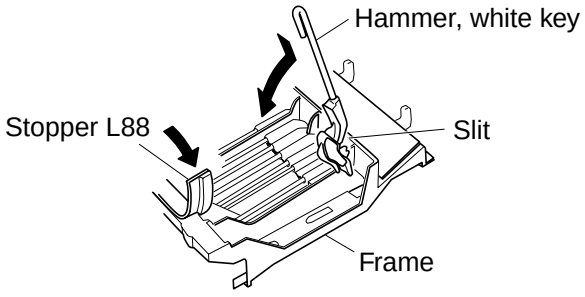

(Fig. 21)

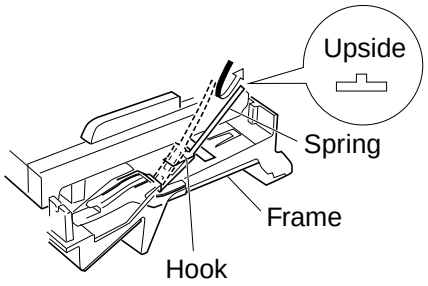

(Fig. 22)

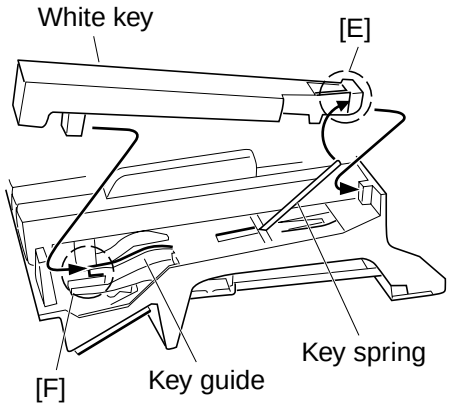

(Fig. 23)

16 Assembling the GH keyboard

16-A Hammer of White (Black) Key

Place the GH keyboard assembly upside down, insert a hammer assembly into the frame, and put the stopper L88 on. (Fig. 21)

* ***There are four kinds of hammers that differ in weight.***

16-B Key Spring

Place the GH keyboard assembly right side up, and fix a key spring to the frame by setting it at the slit and pushing it down once. (Fig. 22)

* ***Be careful of the direction of the spring.***

16-C White (Black) Key

After a key has been fit to part [F] and the key guide, make sure that the spring is fixed to the key. Then press part [E] of the key down. (Fig. 23)

16-D AEXL88-L circuit board

Tighten the seven (7) screws marked [260a] to fix the AEXL88-L circuit board. (Fig. 16)

16-E AEXL88-H circuit board

Tighten the ten (10) screws marked [260b] to fix the AEXL88-Hcircuit board. (Fig. 16)

* ***Set the slits of the rubber contact at the markes on the frame.***

■ LSI PIN DISCRIPTION

● **HG73C205FD** (XU947A00) SWX000 **TONE GENERATOR** DM: IC101,210

PIN NO.	NAME	I/O	FUNCTION	PIN NO.	NAME	I/O	FUNCTION
1	ICN	I	Initial clear	85	CMA3	O	
2	RFCLKI	I	PLL Clock	86	CMA8	O	Program address bus
3	TM2	I	PLL Control	87	CMA2	O	
4	AVDD_PLL		Power supply	88	CRD	O	read signal
5	AVSS_PLL		Ground	89	CMA1	O	Program address bus
6	MODE0	I	SWX dual mode	90	CUB	O	high byte effective signal
7	VCC7		Power supply	91	VCC91		Power supply
8	GND8		Ground	92	GHND92		Ground
9	XIN	I	crystal oscillator	93	CS1	O	CS signal
10	XOUT	O	crystal oscillator	94	CMA0	O	Program address bus
11	MODE1	I	SWX separate mode	95	CLB	O	low byte effective signal
12	TEST0	I	TEST pin	96	CMA12	O	
13	TESTON	I	TEST pin	97	CMA11	O	Program address bus
14	AN0-P40	I		98	CMA10	O	
15	AN1-P41	I	A/D converter	99	CMA9	O	
16	AN2-P42	I		100	GND100		Ground
17	AN3-P43	I		101	CWE	O	write signal
18	AVDD_AN		Power supply	102	CMA16	O	
19	AVSS_AN		Ground	103	CMA15	O	Program address bus
20	TXD0	O	for MIDI or TO-HOST	104	CMA14	O	
21	TXD1	O	for MIDI	105	CMA13	O	
22	EXCLK	I	Crystal oscillator	106	CMD8	I/O	
23	SMD11	I/O		107	CMD7	I/O	
24	SMD4	I/O		108	CMD9	I/O	
25	SMD3	I/O		109	CMD6	I/O	
26	SMD12	I/O		110	CMD10	I/O	
27	SMD10	I/O		111	CMD5	I/O	
28	SMD5	I/O		112	CMD11	I/O	Program memory Data bus
29	SMD2	I/O	Wave memory data bus	113	CMD4	I/O	
30	SMD13	I/O		114	CMD12	I/O	
31	SMD9	I/O		115	CMD3	I/O	
32	SMD6	I/O		116	CMD13	I/O	
33	SMD1	I/O		117	CMD2	I/O	
34	SMD14	I/O		118	CMD14	I/O	
35	VCC35		Power supply	119	VCC119		Power supply
36	GND36		Ground	120	GND115		Ground
37	SMD8	I/O		121	CMD1	I/O	
38	SMD7	I/O	Wave memory data bus	122	CMD15	I/O	Program memory Data bus
39	SMD0	I/O		123	CMD0	I/O	
40	SMD15	I/O		124	CMA21	O	Program address bus
41	SOE	O	read signal	125	PDT15	I/O	
42	SWE	O	write signal	126	PDT14	I/O	
43	SRAS	O	RAS signal	127	PDT13	I/O	
44	SCAS	O	CAS signal	128	PDT12	I/O	
45	REFRESH	O	REFRESH signal	129	PDT11	I/O	SWX access data bus
46	CS0	O	CS signal	130	PDT10	I/O	
47	SMA0	O		131	PDT9	I/O	
48	SMA16	O	Memory address bus	132	PDT8	I/O	
49	VCC49		Power supply	133	VCC133		Power supply
50	GND50		Ground	134	GND134		Ground
51	SMA1	O		135	PDT7	I/O	
52	SMA15	O		136	PDT6	I/O	
53	SMA2	O		137	PDT5	I/O	
54	SMA14	O		138	PDT4	I/O	
55	SMA3	O	Memory address bus	139	PDT3	I/O	SWX access data bus
56	SMA13	O		140	PDT2	I/O	
57	SMA4	O		141	PDT1	I/O	
58	SMA12	O		142	PDT0	I/O	
59	SMA5	O		143	VCA143		Power supply
60	GND60		Ground	144	GND144		Ground
61	VCC61		Power supply	145	PAD2	I	
62	SMA11	O		146	PAD1	I	SWX access address bus
63	SMA6	O		147	PAD0	I	
64	SMA10	O		148	VCC148		Power supply
65	SMA7	O		149	GND149		Ground
66	SMA9	O		150	PCS	I	Chip select
67	SMA17	O		151	PWR	I	write enable
68	SMA8	O	Memory address bus	152	PRD	I	read enable
69	SMA18	O		153	RXD0	I	for Midi or TO-HOST
70	SMA19	O		154	RXD1	I	for Midi or Key scan
71	SMA20	O		155	SCLKI	I	EXT Clock
72	SMA21	O		156	ADIN	I	A/D converter
73	SMA22	O		157	ADLR	O	A/D converter LR clock
74	SMA23	O		158	DO0	O	DAC
75	CMA20	O	Program address bus	159	DO1	O	
76	CMA19	O		160	SYSCLK	O	1/2 clock
77	VCC77		Power supply	161	VCC161		Power supply
78	GND78	O	Ground	162	GND162		Ground
79	CMA18	O		163	WCLK	O	for DAC LR clock
80	CMA17	O		164	QCLK	O	1/12 clock
81	CMA5	O		165	BCLK	O	IIS-DAC clock
82	CMA6	O	Program address bus	166	SYI	I	Synch signal
83	CMA4	O		167	IRQ0	I	Interrupt request
84	CMA7	O		168	NMI	I	Interrupt request

● **PCM1716E**(XU829A00) **DAC**(Digital to Analog Converter) DM: IC610

PIN NO.	NAME	I/O	FUNCTION	PIN NO.	NAME	I/O	FUNCTION
1	LRCK	I		15	Vcc1	-	Analog power supply (+5 V)
2	DATA	I	Data input	16	VOUTL	O	Lch, analog voltage output
3	BCK	I	Bit clock	17	NC	-	
4	CLKO	O	Clock input	18	EXTL	O	Lch, analog output
5	XTI	I	Clock input	19	AGND2L	-	Analog ground
6	XTO	O	Clock out	20	Vcc2L	-	Analog power supply (+5 V)
7	DGND	-	Digital ground	21	/ZERO	O	Zero data flag
8	VDD	-	Digital power supply (+5 V)	22	/RST	I	Reset
9	Vcc2R	-	Analog power supply (+5 V)	23	/CS/IWO	I	Chip select
10	AGND2R	-	Analog ground	24	MODE	I	Mode control select
11	EXTR	O	Rch, analog output	25	/MUTE	I	Mute control
12	NC	-		26	MD/DM0	I	Mode control data/ De-emphasis select1
13	VOUTR	O	Rch, analog voltage output	27	MC/DM1	I	Mode control BCK/De-emphasis select2
14	AGND1	-	Analog ground	28	ML/IIS	I	Mode control Latch/input format select

● **YMZ702-D** (XR632A00) **KSN2** (Key Scanner) KSN2: IC1

PIN NO.	NAME	I/O	FUNCTION	PIN NO.	NAME	I/O	FUNCTION
1	BK5	O	Key block (open drein)	21	GND		Ground
2	BK4	O		22	VDD		Power supply
3	BK3	O		23	SO	O	Serial data
4	BK2	O		24	ACK	I	Acknowledge/mode select
5	BK1	O		25	XCK	I	Clock for serial data
6	BK0	O		26	/IC	I	Initial clear
7	MK15	I	First make contact	27	TST1	I	Test mode
8	MK14	I		28	TST2	I	(L,L: normal mode, others: test)
9	MK13	I		29	XCKINH	I	Inhibit of serial clock
10	MK12	I		30	BK14	O	Key block (open drein)
11	MK11	I		31	BK13	O	
12	MK10	I		32	BK12	O	
13	MK05	I	Second make contact	33	BK11	O	
14	MK04	I		34	BK10	O	
15	MK03	I		35	BK9	O	
16	MK02	I		36	BK8	O	
17	MK01	I		37	BK7	O	
18	MK00	I		38	BK6	O	
19	XIN	I	Crystal osc. input (4 MHz)	39	GND		Ground
20	XOUT	O	Crystal osc. output (4 MHz)	40	VDD		Power supply

■ IC BLOCK DIAGRAM

● μ **PC4574G2** (XE518A00)
Quad Operational Amplifier
A-JACK: IC100

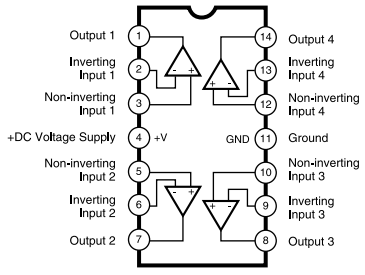

● **SC7SU04FEL** (XI348A00)
Inverter Gate
D-JACK: IC1

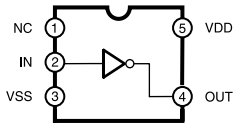

● **HD74LVC139FPEL** (XS048A00)
Dual 2 to 4 Demultiplexer
DM: IC450

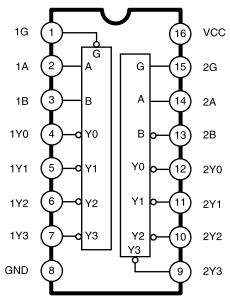

● **LA6517M-TE-R** (XT131A00)
Dual Low Voltage Power Amplifier
A-JACK: IC140

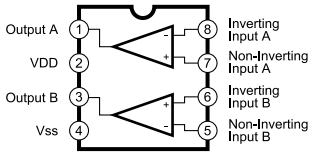

● **SN75C1168NSR** (XU073A00)
Line Driver / Receiver
D-JACK: IC2

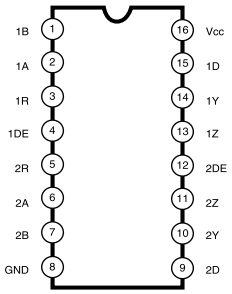

● **MM74HC00SJX** (XW105A00)
Quad 2-Input NAND Gate
DM: IC340

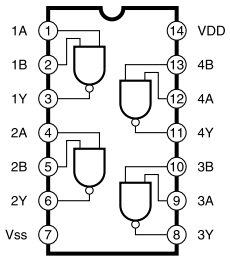

● **MM74HC132** (XY352A00)
Quad 2-Input NAND Schmitt trigger
DM: IC710

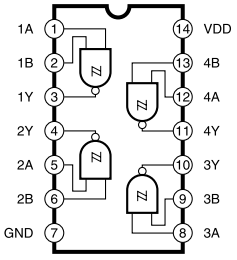

● **MM74HC138** (XY353A00)
3-to-8 Line Decoder
DM: IC510

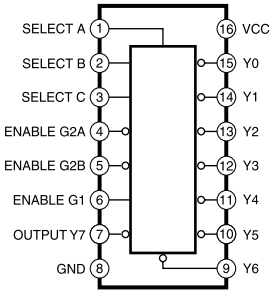

● **M5229FP** (XY487A00)
7 Band Graphic Equalizer
A-JACK: IC160,180

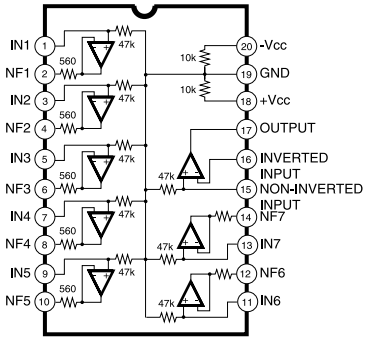

● **TC74HCT00AF** (XY120A00)
Quad 2 Input NAND
DM: IC340

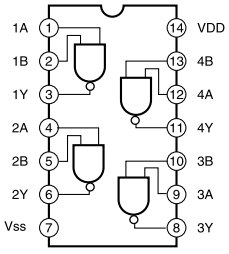

■ CIRCUIT BOARDS

● DM CIRCUIT BOARD

to MA120-CN1 | to PNL-CN302 PNR-CN202 | to PNL-CN301 PNR-CN201 | to D-JACK-CN1 | to D-JACK-CN2

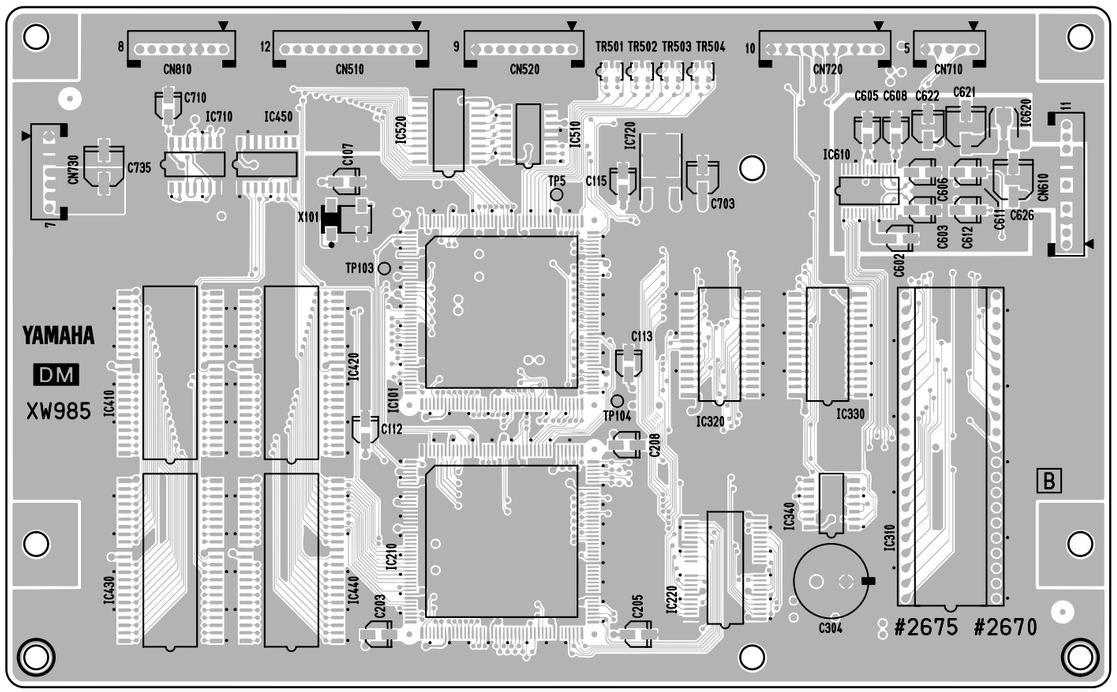

to A-JACK-CN210

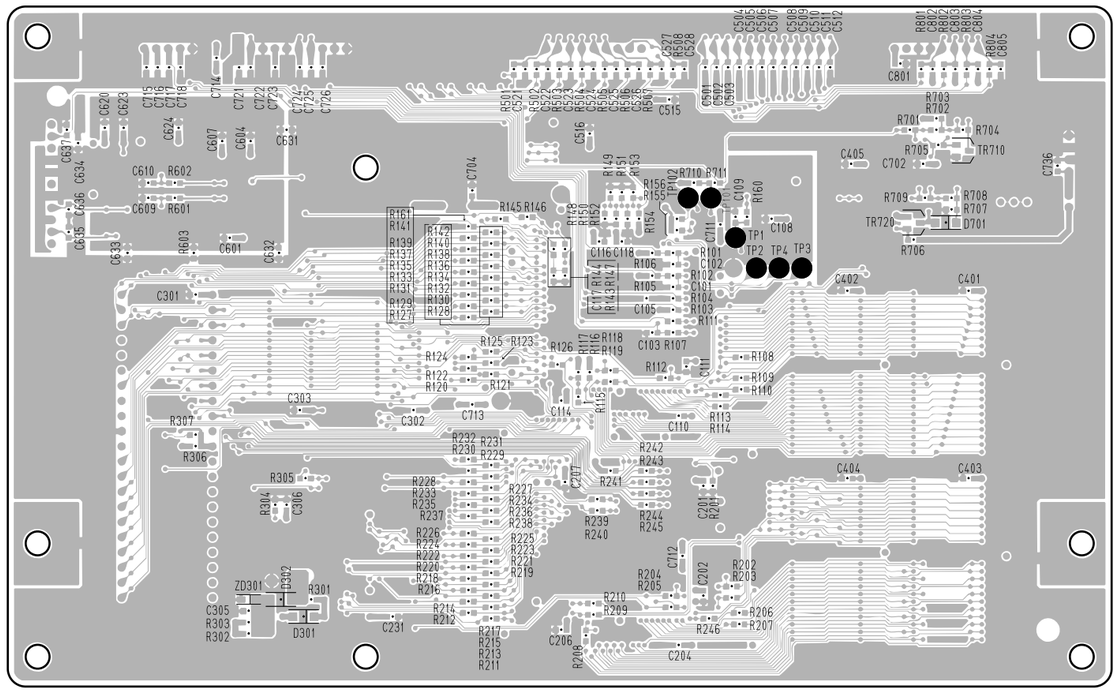

Component side

Pattern side

2NA-V493870 1

Note: See parts list for detailes of circuit board component parts.

● A-JACK CIRCUIT BOARD

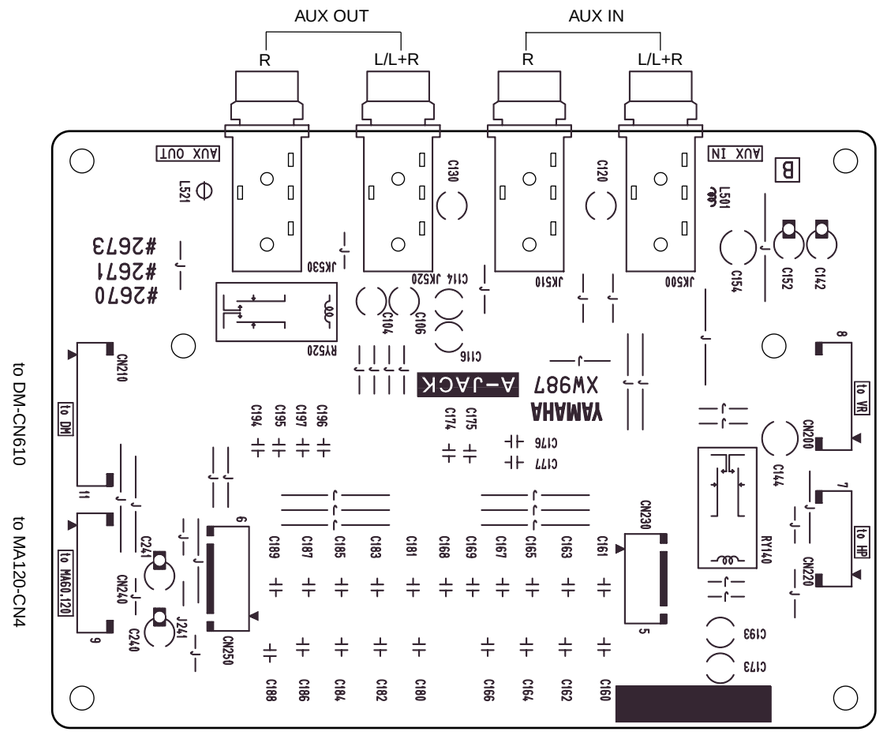

Component side

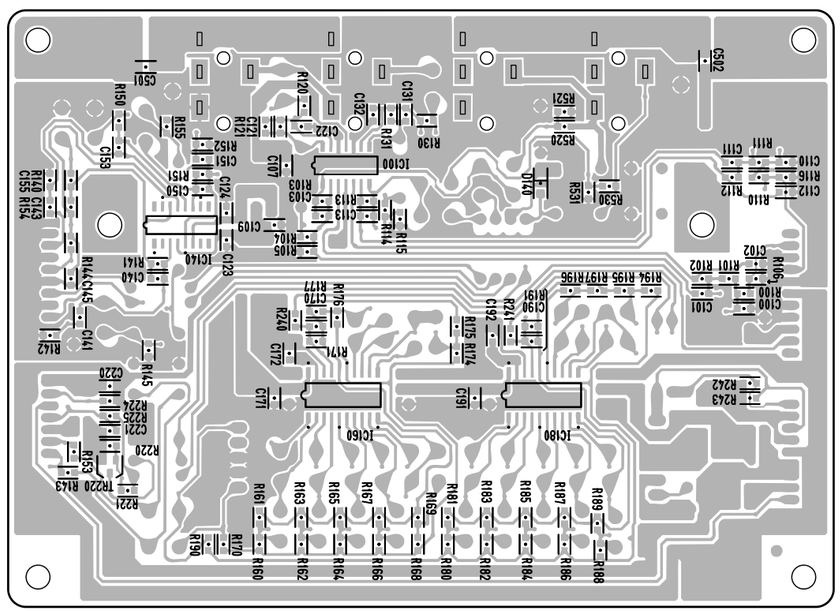

Pattern side

● D-JACK 1/2 CIRCUIT BOARD

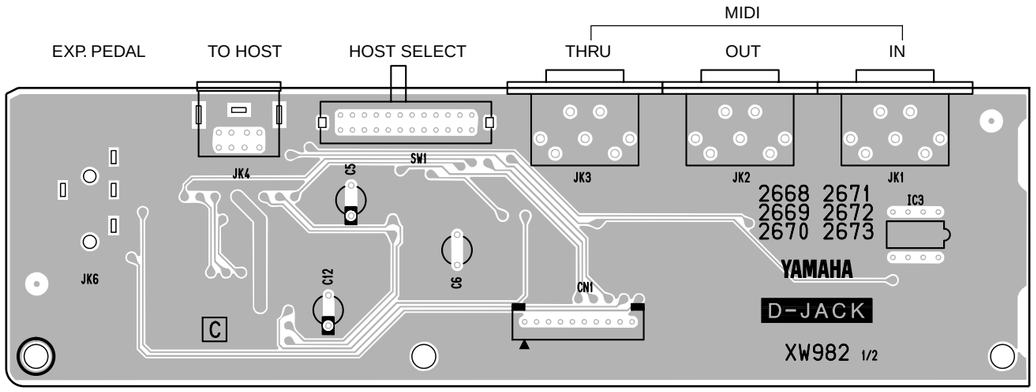

Component side

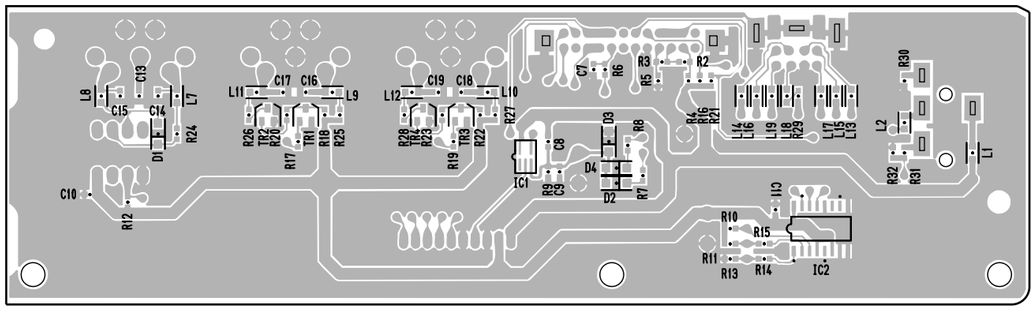

Pattern side

A-JACK: 2NA-V493880 2
D-JACK 1/2: 2NA-V493830 1

Note: See parts list for detailes of circuit board component parts.

● MA120 CIRCUIT BOARD

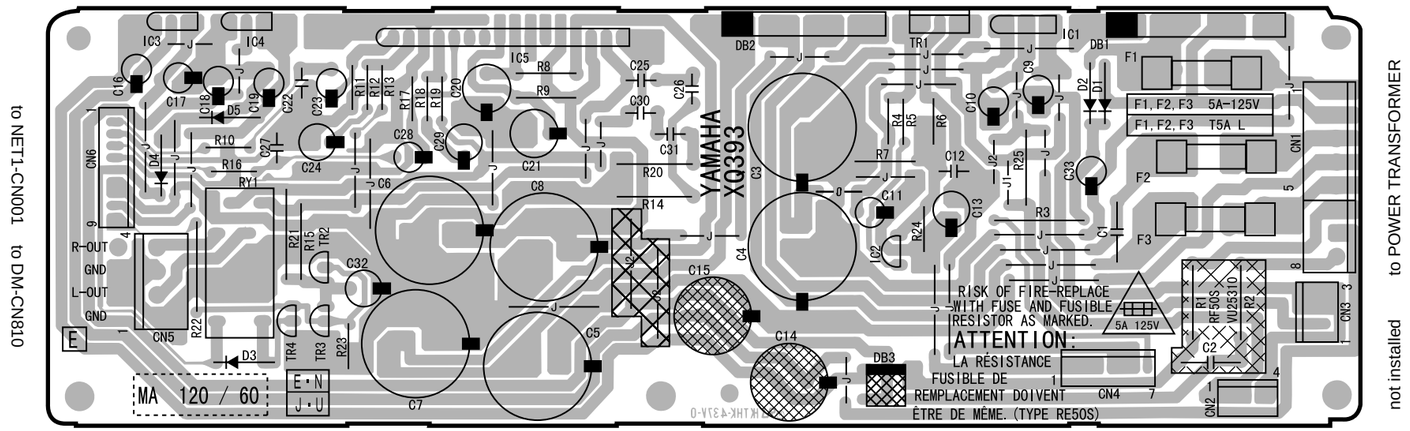

● D-JACK 2/2 CIRCUIT BOARD

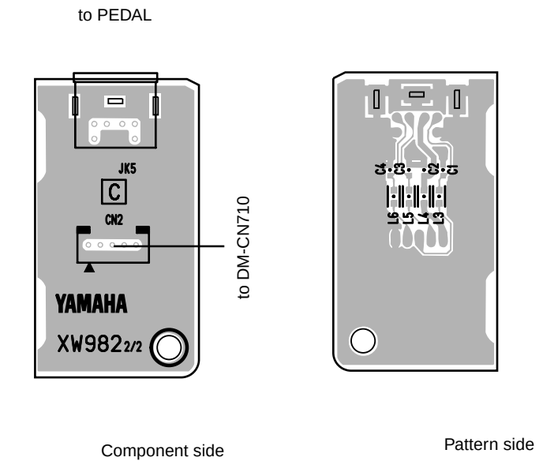

● FU120L CIRCUIT BOARD

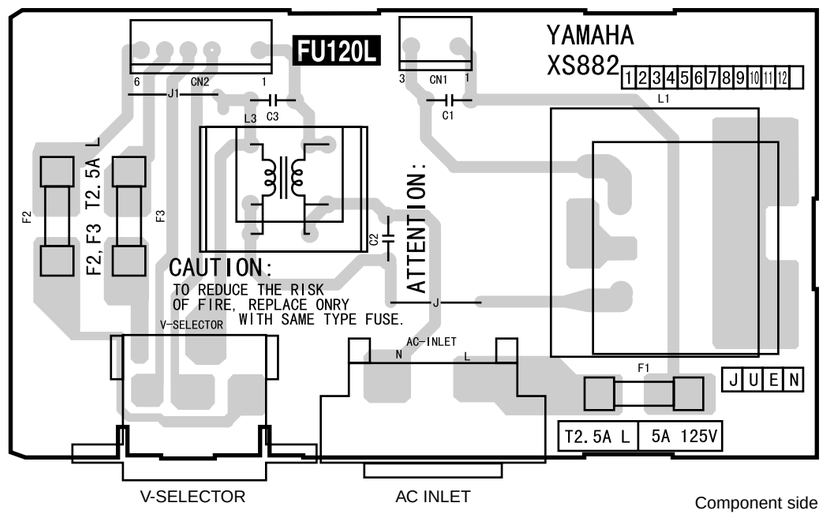

● HP CIRCUIT BOARD

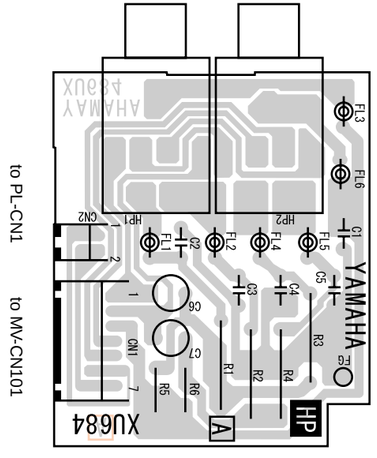

● NET1 CIRCUIT BOARD

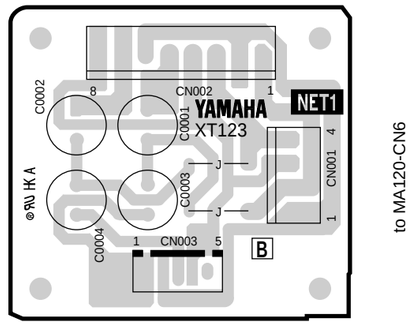

MA120: 2NA-VT14340 ⚠1
FU120L: 2NA-VV65070 ⚠1
D-JACK 2/2: 2NA-V493830 ⚠1
HP: 2NA-VT45180
NET1: 2NA-V531530

Note: See parts list for detailes of circuit board component parts.

● PNL CIRCUIT BOARD

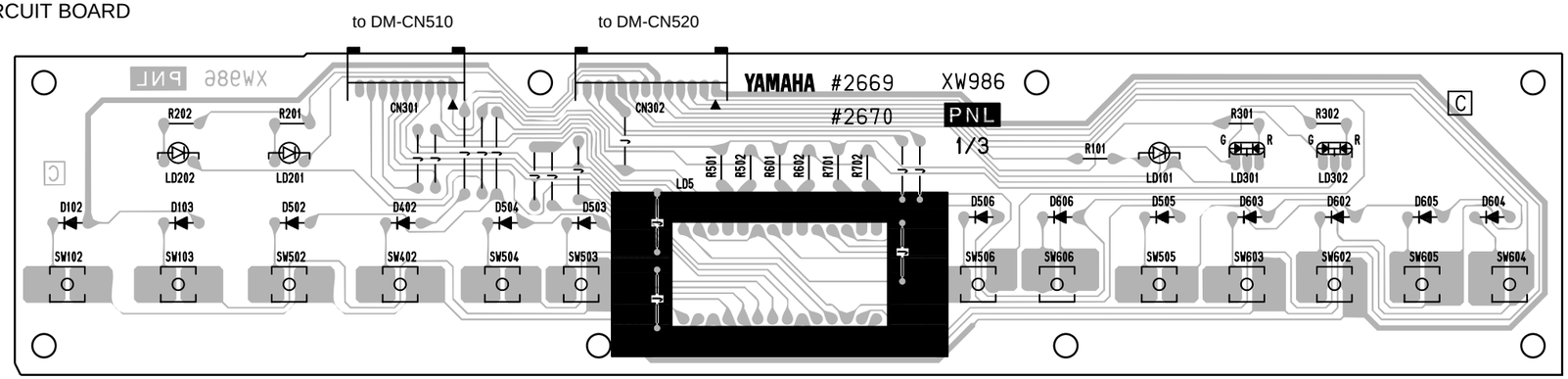

Component side

● PNR CIRCUIT BOARD

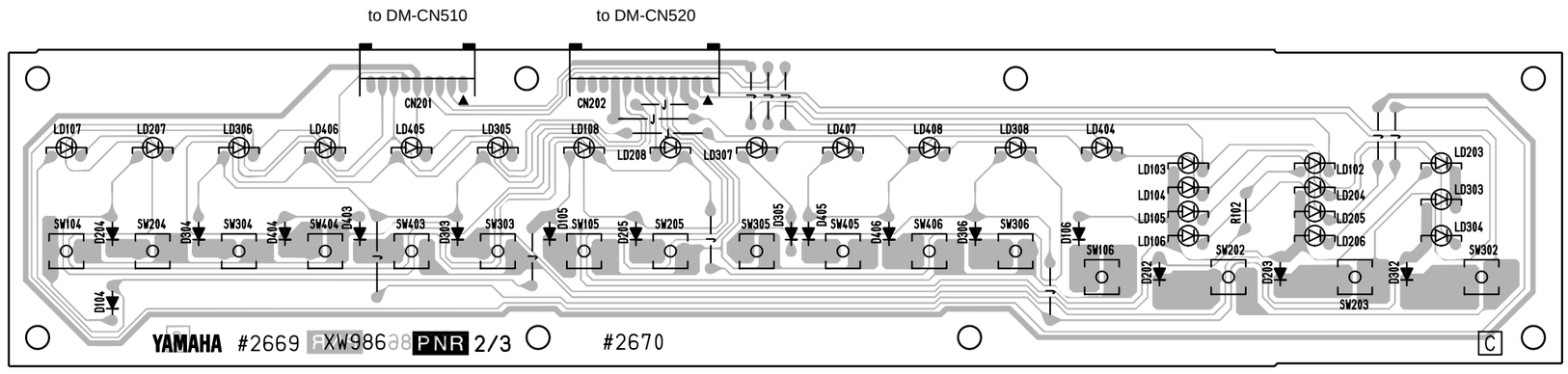

Component side

● PEDAL CIRCUIT BOARD

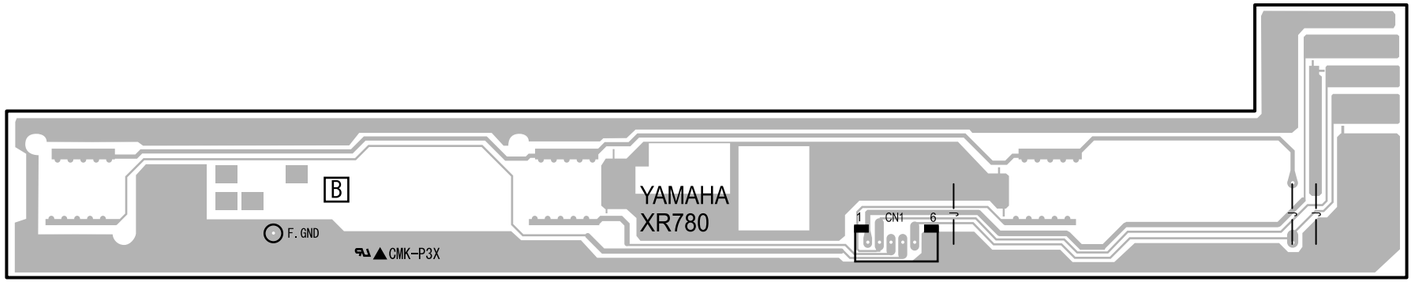

Component side

Note: See parts list for detailes of circuit board component parts.

● PL CIRCUIT BOARD

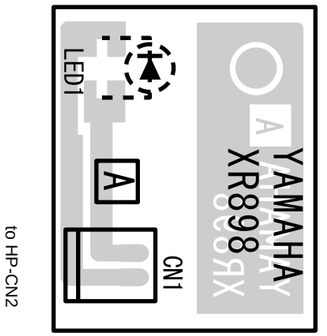

Component side

● MV CIRCUIT BOARD

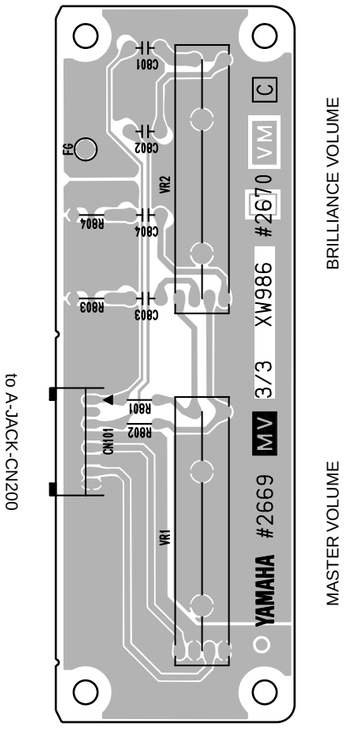

Component side

PNL:	2NA-V512380	1
PNR:	2NA-V512390	1
PEDAL:	2NA-V233730	1
PL:	2NA-VN63740	
MV:	2NA-V512400	1

■TEST PROGRAM

1. Preparation

To check the unit using the test program, the following measuring instruments and jigs will be required:

Level meter (IHF- C curve)

Frequency counter

Notes: Impedance must be 1Mohm or above.

Use stereo plugs, and connect 33 ohm load at PHONES terminal.

Unit setting:

MASTER VOLUME:	Maximum
Tone:	PIANO 1
Pedal:	OFF
Reverb:	OFF
Other terminals:	Not connected

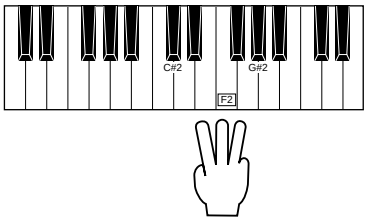

2. How to enter the Test Program

While depressing the [C2#], [F2] and [G2#] keys, turn the power switch ON.

3. Proceeding through the Test Program

The LED will display "TST" when the test program is entered.

To select the program number, press the [TEMPO +/-] button.

To start the test, press the [START / STOP] button.

The LED will display "PAS" if the test result is OK.

To proceed to the next test, press the [START / STOP] button again.

The LED will display "nG" if the test result is NG.

Press the [DEMO] button to proceed to the next test.

Test items

No.	LED display for each test	Test Function and Judgment criteria
1	T01: Version	Displays version for ROM. (PROGRAM, WAVE) .
2	T02: ROM Check 1	Checks all ROMs which are connected to CPU.
3	T03: Wave ROM Check 1	Checks all RAMs which are connected to CPU.
4	T04: Wave ROM Check 1	Checks the wave ROM.
11	T11: TG1 Check	Outputs the sine wave by changing the channels (1 ch - 32 ch) in sequence from F3 to C6. When a voice switch is depressed, the tone of the voice will sound. After autoscaling is finished, individual keys can be played. (If playing two or more keys simultaneously, the key pressed first takes priority.)
12	T12: TG2 Check	Outputs the sine wave by changing the channels (33 ch - 64 ch) in sequence from F3 to C6. When a voice switch is depressed, the tone of the voice will sound. After autoscaling is finished, individual keys can be played. (If playing two or more keys simultaneously, the key pressed first takes priority.)
13	T13: PICH Check	Connect the frequency counter to the [PHONES] terminal. Check that the 441.0 +/- 0 Hz than - 60 dBm AUX OUT R: - 5 dBm +/- 2 db PHONES L: Less than - 40 dBm, PHONES R: - 11 dBm +/- 2 db

15	T15: Output L	Check output level (1 kHz) . AUX OUT L / L + R: - 5 dBm +/- 2 db AUX OUT R: Less than - 60 dBm PHONES L: - 11 dBm +/- 2 db, PHONES R: Less than - 40 dBm
16	T16: EQ Low	For factory test use only.
17	T17: EQ Mid	For factory test use only.
18	T18: EQ High	For factory test use only.
19	T19: D / A Noise	Checks D / A converter noise. Play a note and check that there is no noise during the PIANO 1 release time. (Damper pedal is ON)
20	T20: SW, LED Check	Checks switchs and LEDs on the pedal. Play the switch which is displayed on theLED. (The order is shown in the Table 1.) A pre-assigned note is output when the switches pressed. (With some switches, the corresponding LED will light up.)
21	T21: All Panel LED On	Check that all panel LEDs are lit.
31	T31: Soft Pedal Check	Check that C4 is output when pushing the pedal and C3 is output when releasing the pedal, and that the LED displayins OK.
32	T32: Soste. Pedal Check	Check that C4 is output when pushing the pedal and C3 is output when releasing the pedal, and that the LED displays OK.
33	T33: Damper Pedal Check	Check that C4 is output when pushing the pedal and C3 is output when releasing the pedal, and that the LED displays OK.
37	T37: MIDI Check	After connecting the MIDI IN and MIDI OUT, execute the test . The test result appears on tne LED display.
38	T38: To Host Check	Connect pin to pin 2, pin 3 to pin 5, and pin 6 to pin 8 on the TO HOST terminal, and execute the test. Check that the following notes are output when changing the HOST SELECT switch position according to the LED indication, and that the LED displays “OK”. Mac position: C5, PC - 2 position: C4, PC - 1 position: C3
41	T41: ROM Check 2	For factory test use only.
42	T42: RAM Check 2	For factory test use only.
43	T43: Wave ROM Check 2	For factory test use only.
46	T46: Back Up Check 2	For factory test use only.
47	T47: Factory Set	All RAMs are initialized and set to the factory preset data when executing this test.
48	T48: Test Mode Exit	Exit from the test program when executing this test.

Notes: 0 dBm = 0.775 V

■ INSPECTION

1. AUX OUT and PHONES

1-1 Apply a 1 kHz, - 20 dBm sine wave to the AUX IN L / L + R. Confirm that the output meets the following specifications:

AUX OUT L / L + R: - 10 dBm +/- 2 dB
AUX OUT R: Less than - 60 dBm
PHONES L: - 14 dBm +/- 2 dB
PHONES R: Less than - 40 dBm

1-2 Apply a 1 kHz, - 20 dBm sine wave to the AUX IN R. Confirm that the output meets the following specifications:

AUX OUT L / L + R: Less than - 60 dBm
AUX OUT R: - 10 dBm +/- 2 dB
PHONES L: Less than - 60 dBm
PHONES R: - 14 dBm +/- 2 dB

2. Noise Level

Confirm that the PHONES L and R output noise level is less than - 90 dBm when no sound is produced.
Note: 0 dBm = 0.775 V

SW NO.	SWITCH	NOTE	LED	SW NO.	SWITCH	NOTE	LED
S01	DEMO	C3		S12	FUNCTION	B3	O
S02	TRANSPOSE	C#3	O	S13	TEMPO -	C4	
S03	REVERB	D3	O	S14	TEMPO +	C#4	
S04	TOUCH	D#3	O	S15	PIANO SONG	D4	O
S05	GRAND PIANO	E3	O	S16	SONG SELECT -	D#4	
S06	E. PIANO	F3	O	S17	SONG SELECT +	E4	
S07	HARPSICHORD	F#3	O	S18	RECORDER 1	F4	O
S08	STRINGS	G3	O	S19	RECORDER 2	F#4	O
S09	PIPE ORGAN	G#3	O	S20	START/STOP	G4	
S10	VARIATION	A3	O	S21	REC	G#4	
S11	METRONOME	A#3	O				

SWITCH TABLE 1

■ MIDI INPLEMENTATION CHART

YAMAHA [Clavinova] Date: 1 March, 2000

Model: CLP-950 MIDI Implementation Chart Version: 1.0

Function		Transmitted	Recognized	Remarks
Basic	Default	1	1	
Channel	Changed	1 ~ 16	1 ~ 16	
	Default	3	1 *1	Poly Mode only
Mode	Messages	X	X	
	Altered	**********	X	
Note		9 ~ 120	0 ~ 127	
Number:	True voice	**********	21 ~ 108	
Velocity	Note on	O 9nH, v=1 ~ 127	O v=1 ~ 127	
	Note off	X 9nH, v=0	X	
After	key's	X	X	
Touch	Ch's	X	X	
Pitch Bender		X	X	
Control Change				
	0, 32	O	O	Bank Select
	07	X	O	Volume
	11	O	O	Expression
	64	O	O	Damper
	66	O	O	Sostenuto
	67	O	O	Soft pedal
	91	O	O	Reverb Depth
	94	O	O	Effect Depth
	120	X	O	All sounds off
	121	X	O	Reset All Controllers
Program		O	O	
Change:	True #	**********		
System Exclusive		O	O	
System:	Song Position	X	X	
	: Song Select	X	X	
Common:	Tune	X	X	
System:	Clock	O	O	
Real Time:	Commands	O	O	
Aux:	Local ON/OFF	X	O	
	: All Notes Off	O	O (123 ~ 127)	
Messages:	Active Sense	O	O	
	: Reset	X	X	

Notes: *1 = Recieve Mode is always multi timbre and Poly mode.

Mode 1: OMNI ON, POLY Mode 2: OMNI ON, MONO O: Yes

Mode 3: OMNI OFF, POLY Mode 4: OMNI OFF, MONO X: No

Clavinova®

CLP-950/CLP-950C/CLP-950M

PARTS LIST

■ **CONTENTS**

OVERALL ASSEMBLY 2
MAIN UNIT 4
SIDE BOARD ASSEMBLY 8
PEDAL BOX ASSEMBLY 10
PEDAL ASSEMBLY 11
FRONT BOARD ASSEMBLY 12
TOP BOARD ASSEMBLY 13
MUSIC REST ASSEMBLY 14
SIDE COVER ASSEMBLY 15
END BLOCK ASSEMBLY 16
KEYBOARD ASSEMBLY 17
PANEL ASSEMBLY 18
KEY COVER ASSEMBLY 19
MA120 ASSEMBLY 20
FU120L ASSEMBLY 21
JACK UNIT 22
HEADPHONES JACK ASSEMBLY 23
BENCH (BC-15) 24
BENCH (BC-100) 25
ELECTRICAL PARTS 26

Note) DESTINATION ABBREVIATIONS

A:	Australian model	M:	South African model
B:	British model	O:	Chinese model
C:	Canadian model	Q:	South-east Asia model
D:	German model	T:	Taiwan model
E:	European model	U:	U.S.A. model
F:	French model	V:	General export model (110V)
H:	North European model	W:	General export model (220V)
I:	Indonesian model	N,X:	General export model
J:	Japanese model	Y:	Export model

■ WARNING

Components having special characteristics are marked ⚠ and must be replaced with parts having specifications equal to those originally installed.

- ■ The numbers in “QTY” shows quantities for each unit.
- ■ The parts with “– –” in “Part No.” are not available as spare parts.
- ■ This mark “ } ” in the REMARKS column means these parts are interchangeable.
- ■ The second letter of the shaded ( ) parts number is I, not one.
- ■ The second letter of the shaded ( ) parts number is O, not zero.

■ OVERALL ASSEMBLY

● **Front view**

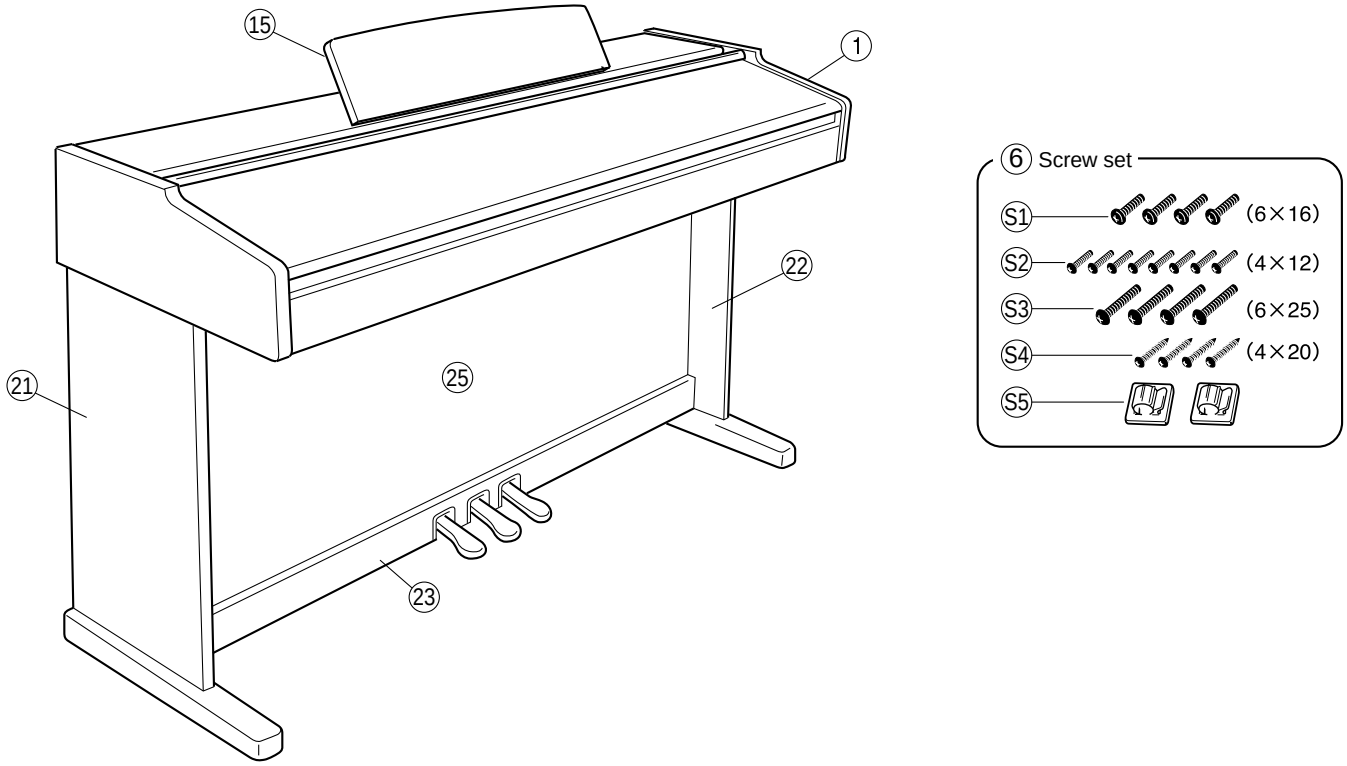

● **Rear view**

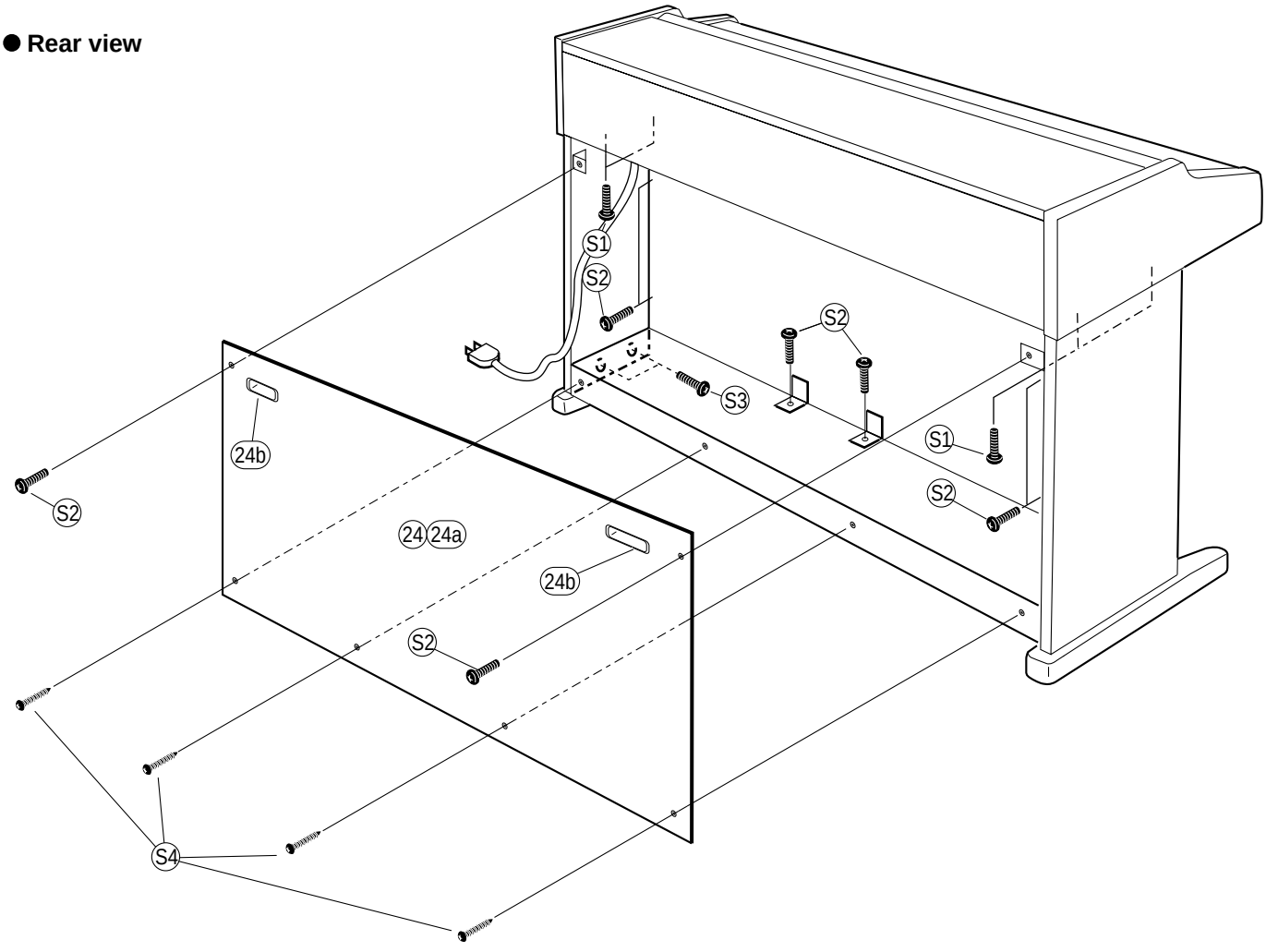

	REF NO.	PART NO.	DESCRIPTION			REMARKS		QTY	RANK
			OVERALL ASSEMBLY			CLP-950 J,U,B,E,N			
	1	--	Main Unit			CLP-950 J	(V495280)		
	1	--	Main Unit			CLP-950 U	(V495290)		
	1	--	Main Unit			CLP-950 B,E	(V495310)		
	1	--	Main Unit			CLP-950 N	(V495320)		
	1	--	Main Unit			CLP-950C J	(V577380)		
	1	--	Main Unit			CLP-950C U	(V577390)		
	1	--	Main Unit			CLP-950C B,E	(V577400)		
	1	--	Main Unit			CLP-950C N	(V577410)		
	1	--	Main Unit	U		CLP-950M U	(V530490)		
	1	--	Main Unit	E		CLP-950M B,E	(V530510)		
	1	--	Main Unit	N		CLP-950M N	(V530520)		
⚠	5	VT015700	AC Cord Set	J 2P 2.5m 7A		J			05
⚠	5	V2916900	AC Cord Set	J 2P 7A 2.5m		J			05
⚠	5	V3126200	AC Cord Set	J 2P 2.5m 7A		J			
⚠	5	VT015800	AC Cord Set	U2P 2.44m 7A		U			06
⚠ *	5	V2917000	AC Cord Set	UC 2P 7A 2.44m		U			
⚠ *	5	V3126400	AC Cord Set	U 2P 2.5m		U			
⚠	5	VT016000	AC Cord Set	B 2P 2.5m		B			08
⚠ *	5	V3126500	AC Cord Set	B 2P 2.5m		B			
⚠	5	VT015900	AC Cord Set	E 2P 2.5m		E,N			05
⚠	5	V2917100	AC Cord Set	E 2P 2.5m 2.5A		E,N			05
⚠	5	V3126300	AC Cord Set	E 2P 2.5m		E,N			
⚠ *	6	V5283400	Screw Set						
⚠	13	VK726100	Connector	CCT5902		N			03
	15	V4956200	Music Rest Assembly			CLP-950			
*	15	V5774200	Music Rest Assembly			CLP-950C			
*	15	V5297400	Music Rest Assembly			CLP-950M			
	21	--	Side Board Assembly	LEFT		CLP-950	(V494210)		
	21	--	Side Board Assembly	LEFT		CLP-950C	(V559520)		
	21	--	Side Board Assembly	LEFT		CLP-950M	(V530950)		
	22	--	Side Board Assembly	RIGHT		CLP-950	(V494230)		
	22	--	Side Board Assembly	RIGHT		CLP-950C	(V559580)		
	22	--	Side Board Assembly	RIGHT		CLP-950M	(V530960)		
	23	--	Pedal Box Assembly				(V494290)		
	24	V5120800	Back Board Set			CLP-950			
*	24	V5594300	Back Board Set			CLP-950C			
*	24	V5421800	Back Board Set			CLP-950M			
	24a	--	Back Board Assembly				(V552720)		
	24a		Back Board Assembly						
	24a		Back Board Assembly						
	24b	CB043640	Handle	BR				2	02
	25	--	Front Board Assembly			CLP-950	(V496200)		
	25		Front Board Assembly			CLP-950C	(V552730)		
	25		Front Board Assembly			CLP-950M	(V559390)		
			ACCESSORIES						
		--	Bench	BC-15 J		CLP-950 J	(VU42180)		
		--	Bench	BC-XX		CLP-950U,N	(V553140)		
		--	Bench	BC-15CH (U)		CLP-950C J	(V553130)		
		--	Bench	BC-100 CH		CLP-950C U,N	(V553160)		
		--	Bench	BC-100 MH		CLP-950M U,N	(V553150)		
		V5771000	Headphone	P402522A0000		J			
		V5283400	Screw Set						
		V6134600	Screw Set			CLP-950C			
	S1	EG360020	Bind Head Screw	6.0X16 MFZN2BL				4	01
	S2	VP367300	Truss Head Screw	4.0X12 MFZN2BL				8	01
	S2	V6135000	Truss Head Screw	4.0X12 MFCBR		CLP-950C		8	
	S3	VQ448400	Truss Head Screw	6.0X25 MFZN2BL				4	01
	S4	03747290	Truss Head Tapping Screw-1	4.0X20 MFZN2BL				4	01
	S4	VB164600	Truss Head Tapping Screw-1	4.0X20 MFCBR		CLP-950C		4	
	S5	VR410300	Cord Clamp Set						03
	S5a	VP592100	Cord Clamper	DKN-5B (VHB)				2	03
			JIGS						
		TX900761	Hex, Wrench	6mm					09
		TX000670	Rod						99

*: New Parts

RANK: Japan only

■ MAIN UNIT

● Rear view

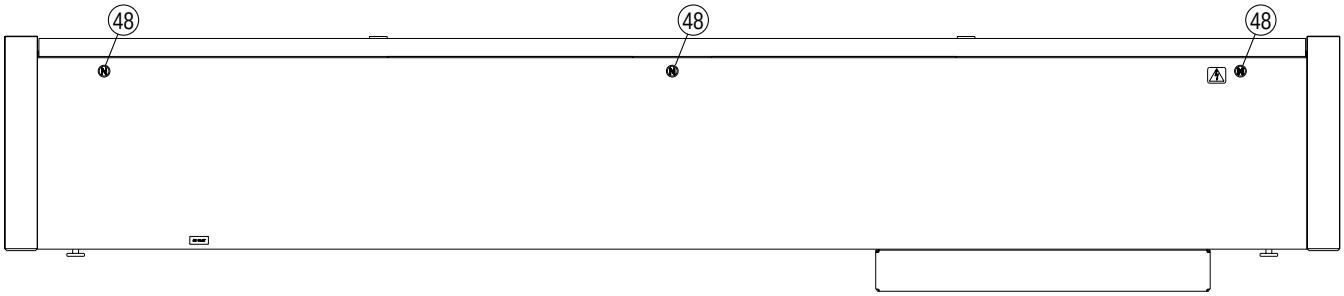

● Top view 1

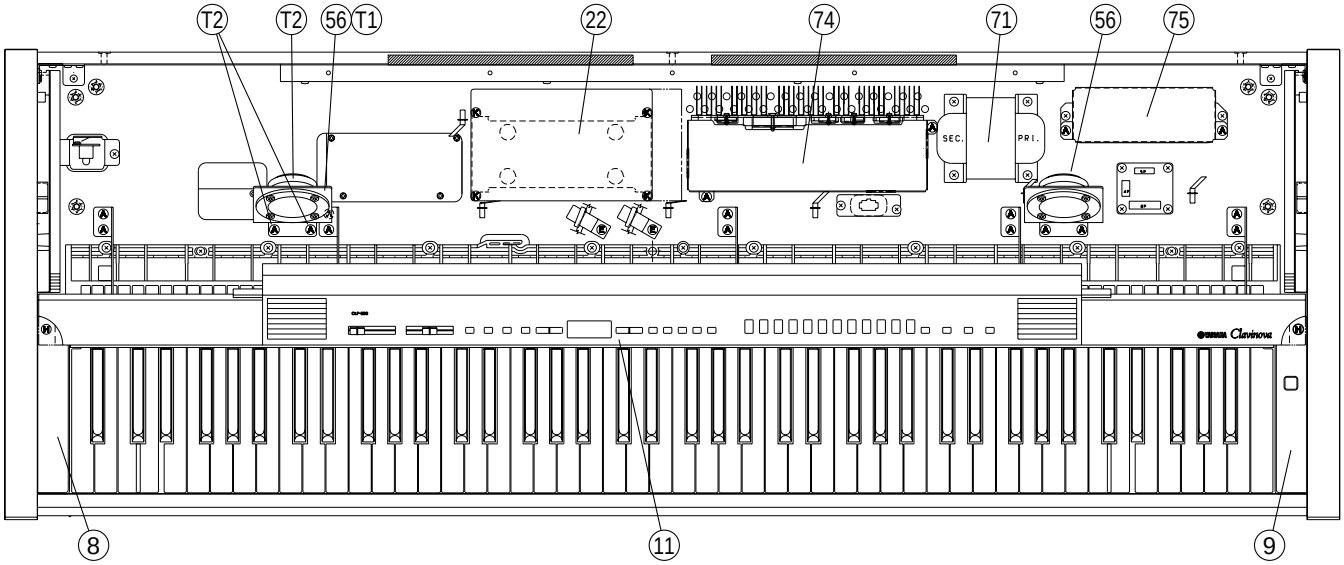

● Side view

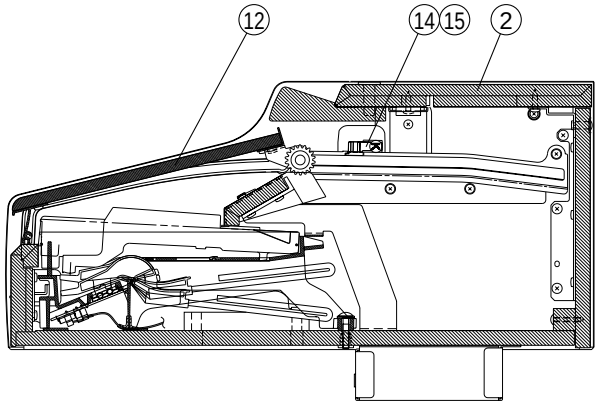

Screw	Ref. No	Parts No	Qty
A	40	Bind Head Tapping Screw-1 (EP030340)	43
B	41	Truss Head Tapping Screw-1 (EN630190)	15
C	42	Pan Head Screw (VV040700)	9
E	43	Truss Head Tapping Screw-1 (EN630230)	1
G	44	Bind Head Tapping Screw-1 (EP040230)	2
H	45	Truss Head Tapping Screw-1 (VU952600)	2
J	46	Bind Head Tapping Screw-1 (EP030240)	2
K	47	Bind Head Tapping Screw-B (EP600190)	6
N	48	Truss Head Screw (VB934000)	7
Q	49	Bind Head Tapping Screw-1 (EP030470)	4
S	50	Guide Screw (VN887900)	2
U	51	Bind Head Tapping Screw-B (EP600240)	4
V	52	Bind Head Tapping Screw-1 (EP030190)	10

● **Bottom view**

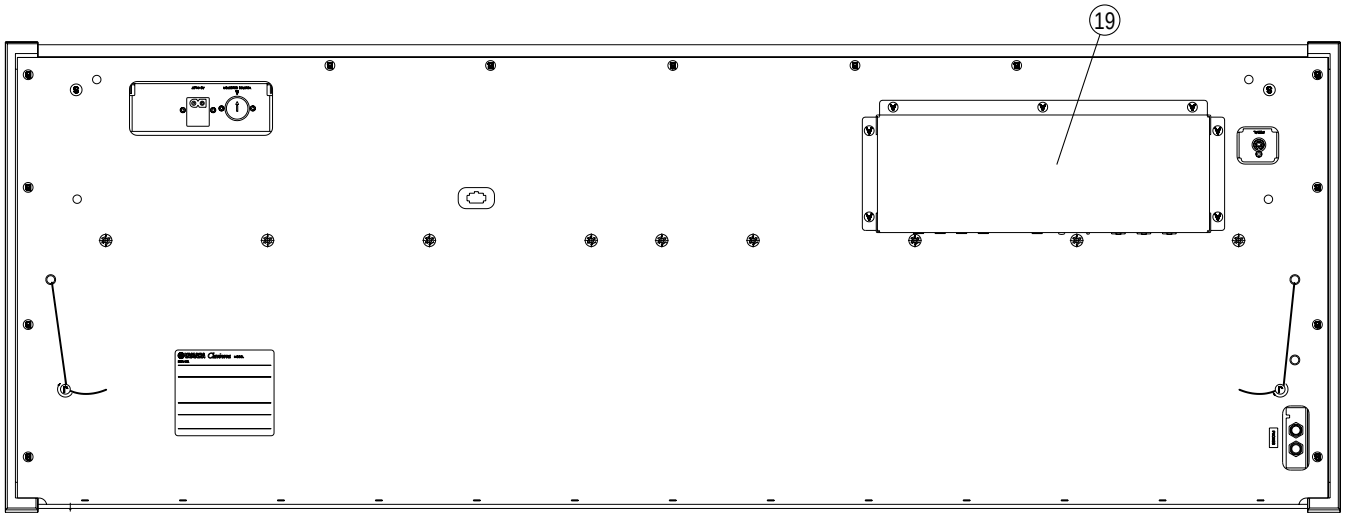

● **Top view 2**

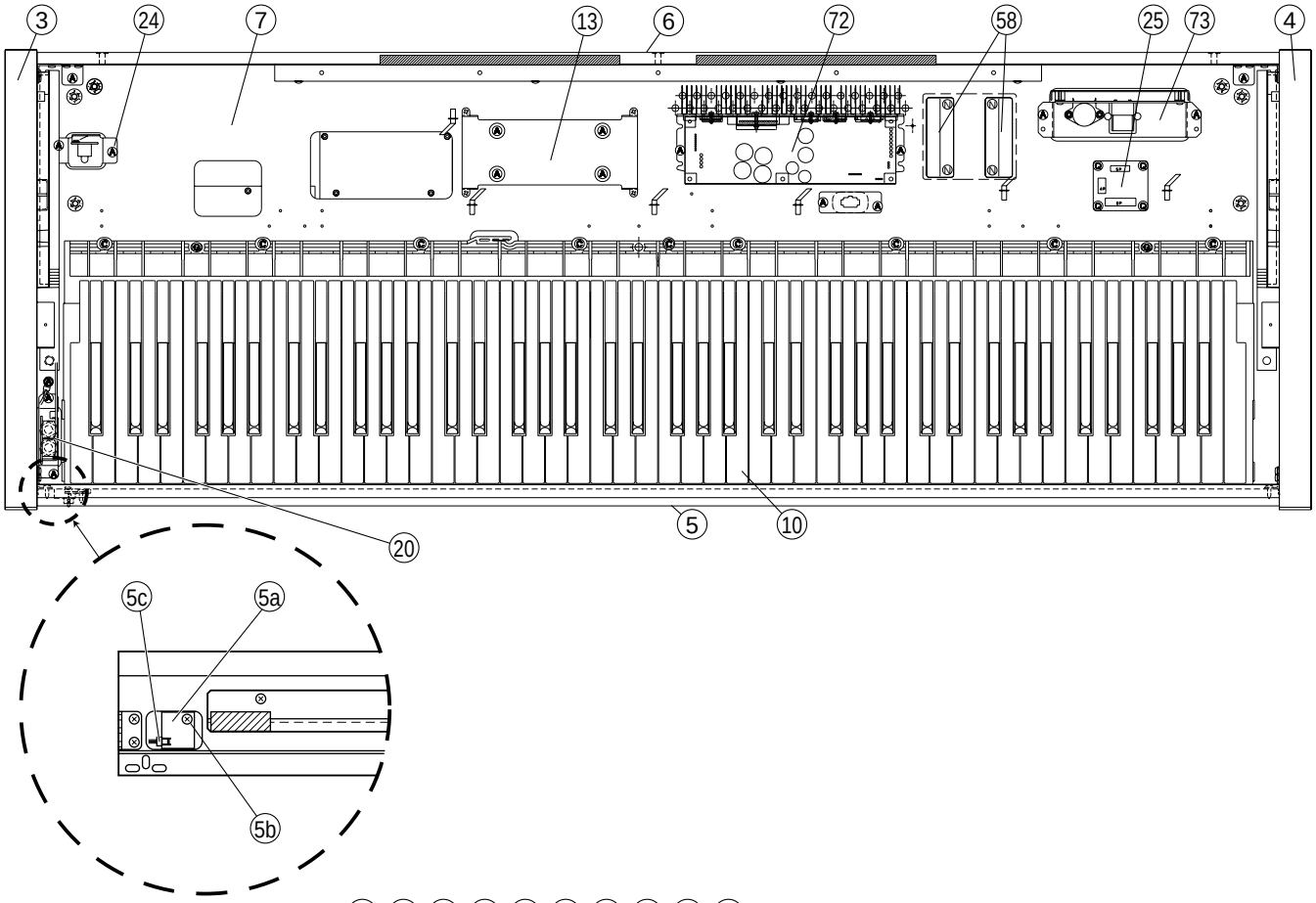

Note : Connector assemblies (26), (27), (28), (29), (30), (31), (32), (33), (35), (36) are shown in the CIRCUIT BOARD LAYOUT section on page *.

	REF NO.	PART NO.	DESCRIPTION		REMARKS	QTY	RANK
			MAIN UNIT		CLP950		
		--	Main Unit		J (V495280)		
		--	Main Unit		U (V495290)		
		--	Main Unit		B,E (V495310)		
		--	Main Unit		N (V495320)		
		--	Main Unit		CLP-950C J (V577380)		
		--	Main Unit		CLP-950C U (V577390)		
		--	Main Unit		CLP-950C B,E (V577400)		
		--	Main Unit		CLP-950C N (V577410)		
		--	Main Unit		CLP-950M U (V530490)		
		--	Main Unit		CLP-950M B,E (V530510)		
		--	Main Unit		CLP-950M N (V530520)		
		--	Main Unit Sub Assembly		(V495330)		
		--	Main Unit Sub Assembly		CLP-950C (V577440)		
		--	Main Unit Sub Assembly		CLP-950M (V530530)		
	40	EP030340	Bind Head Tapping Screw-1	3.5X12 MFZN2BL	U	4	01
⚠	71	XQ425A00	Power Transformer		J		14
⚠	71	XQ426A00	Power Transformer	29WP244 U	U		13
⚠	71	XQ427B00	Power Transformer	GA-120 E IEC65	B,E		14
⚠	71	XQ428B00	Power Transformer	GA-120 N	N		16
	72	VT492000	MA120 Assembly	J,U	J,U		23
	72	VT492100	MA120 Assembly	E,GBR,N	B,E,N		23
	73	VV651100	FU120 Assembly	J	J		13
	73	VV651300	FU120 Assembly	U	U		
	73	VV651400	FU120 Assembly	E	B,E		13
	73	VV651500	FU120 Assembly	N	N		12
	74	V2191000	MA Cover Assembly		U		07
	75	VV607200	FU Cover Assembly		U		06
		--	Main Unit Sub Assembly		(V495330)		
		--	Main Unit Sub Assembly		(V577440)		
		--	Main Unit Sub Assembly		(V530530)		
	2	V4956400	Top Board Assembly		CLP-950		
*	2	V5775000	Top Board Assembly		CLP-950C		
*	2	V5307200	Top Board Assembly		CLP-950M		
	3	V4956500	Side Cover Assembly	LEFT	CLP-950		
*	3	V5775100	Side Cover Assembly	LEFT	CLP-950C		
*	3	V5305400	Side Cover Assembly	LEFT	CLP-950M		
	4	V4956600	Side Cover Assembly	RIGHT	CLP-950		
*	4	V5775200	Side Cover Assembly	RIGHT	CLP-950C		
*	4	V5305500	Side Cover Assembly	RIGHT	CLP-950M		
	5	AAX14860	Keybed & F.Rail Assembly	(V495670+V594970)	CLP-950		
*	5	AAX17230	Keybed & F.Rail Assembly	(V495690+V559360)	CLP-950C		
*	5	AAX17240	Keybed & F.Rail Assembly	(V594970+V530880)	CLP-950M		
	5a	VN637600	Circuit Board	PL(YCJ)			03
	5a	VU659100	Circuit Board	PL(YMMA)			03
	5b	EP030340	Bind Head Tapping Screw-1	3.5X12 MFZN2BL			01
	5c	--	Connector Assembly	2P-150 KRD-KRD	(VK09960)		
	6	V4956800	Back Top Board Assembly		CLP-950		
*	6	V5775400	Back Top Board Assembly		CLP-950C		
*	6	V5527900	Back Top Board Assembly		CLP-950M		
	8	--	End Block Assembly	LEFT	CLP-950 (V533560)		
	8	--	End Block Assembly	LEFT	CLP-950C (V559500)		
	8	--	End Block Assembly	LEFT	CLP-950M (V533570)		
	9	--	End Block Assembly	RIGHT	CLP-950 (V528550)		
	9	--	End Block Assembly	RIGHT	CLP-950C (V559470)		
	9	--	End Block Assembly	RIGHT	CLP-950M (V530910)		
	10	VU431800	Keyboard Assembly	A88 K6			55
	11	--	Panel Assembly		(V495700)		
	12	V5385100	Key Cover Assembly				
*	12	V5776600	Key Cover Assembly				
*	12	V5305700	Key Cover Assembly				
	13	--	Angle	M P.C.B.	(V495720)		
	14	VS312100	Rack Cover	LEFT			03
	15	VS312200	Rack Cover	RIGHT			03
	18	VN891200	Connector Panel				03
	19	--	Jack Unit		(V497380)		
	20	--	Headphones Jack Assembly	HP	(VT15870)		
	20	--	Headphones Jack Assembly		(V004750)		
	22	V4938700	Circuit Board	DM			

***: New Parts** **RANK: Japan only**

REF NO.	PART NO.	DESCRIPTION			REMARKS		QTY	RANK
23	CB040950	Spacer					4	03
24	--	PK Connector				(V498050)		
24a	--	Plate			CLP-950	(V493910)		
24a	--	Plate			CLP-950C/M	(V498060)		
24b	V4939100	Circuit Board	PEDAL					
24c	EP600190	Bind Head Tapping Screw-B	3.0X8 MFZN2BL				2	01
25	V2403300	Circuit Board	NET1					
26	--	Connector Assembly	T-SP L=200			(V531580)		
27	--	Connector Assembly	7P-700 KRD-KRD			(VK11820)		
28	--	Connector Assembly	PU-NM L=560			(V531570)		
29	--	Connector Assembly	MK-LF			(V550670)		
30	VK112500	Connector Assembly	9P-500 KRD-KRD					05
31	VK107900	Connector Assembly	7P-350 KRD-KRD					05
32	--	Connector Assembly	5P-600 KRD-KRD			(VK11500)		
33	VJ983500	Connector Assembly	10P-500 KRD-KRD					05
35	VK102900	Connector Assembly	11P-200 KRD-KRD					05
36	--	Connector Assembly	GND L=100			(V590820)		
37	CB069250	Cord Holder	BK-1				2	01
38	VP834600	Adhesive Tape	12X50				3	02
40	EP030340	Bind Head Tapping Screw-1	3.5X12 MFZN2BL				40	01
41	EN630190	Truss Head Tapping Screw-1	3.5X25 MFZN2BL				15	01
42	VV040700	Pan Head Screw	5.0X25 MFZN2Y				9	01
43	EN630230	Truss Head Tapping Screw-1	3.5X14 MFZN2Y					01
44	EP040230	Bind Head Tapping Screw-1	4.0X14 MFZN2Y				2	01
45	VU952600	Truss Head Tapping Screw-1	3.5X30 MFZN2BL				2	01
46	EP030240	Bind Head Tapping Screw-1	3.5X12 MFZN2Y				2	01
47	EP600190	Bind Head Tapping Screw-B	3.0X8 MFZN2BL				6	01
48	VB934000	Truss Head Screw	4.0X20 MFZN2BL				7	01
48	V6141100	Truss Head Screw	4.0X20 MFC2BROWN		CLP-950C		7	01
49	EP030470	Bind Head Tapping Screw-1	3.5X20 MFZN2Y				4	01
50	VN887900	Guide Screw	+6X14				2	03
51	EP600240	Bind Head Tapping Screw-B	4.0X10 MFZN2BL				5	01
52	EP030190	Bind Head Tapping Screw-1	3.5X16 MFZN2Y				10	01
55	--	Electritic Adhesive Tape	T-200 25X20M			(V591400)		
56	--	Speaker Assembly				(V575030)	2	
58	V2431100	Holder Assembly P.T.					2	07
	--	Speaker Assembly				(V575030)		
T1	--	Angle Bracket, Speaker				(V574870)		
T2	XL455A00	Speaker	5.0cm 16ohm 60W					07
T3	EP600240	Bind Head Tapping Screw-B	4.0X10 MFZN2BL				4	01

*: New Parts

RANK: Japan only

■ SIDE BOARD ASSEMBLY

● **Front view**

● **Side view**

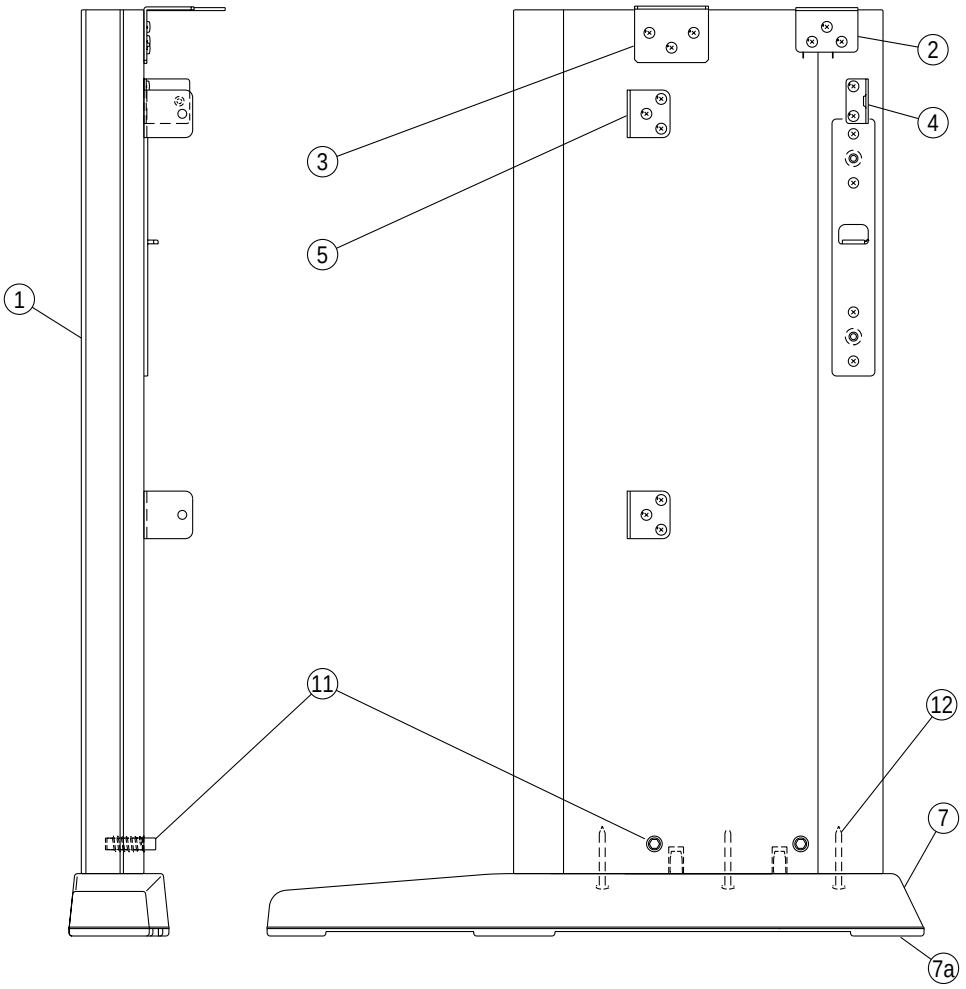

	REF NO.	PART NO.	DESCRIPTION			REMARKS		QTY	RANK
			SIDE BOARD ASSEMBLY			CLP950			
		--	Side Board Assembly	LEFT		CLP-950	(V494210)		
		--	Side Board Assembly	LEFT		CLP-950C	(V559520)		
		--	Side Board Assembly	LEFT		CLP-950M	(V530950)		
	1	V4960700	Side Board	LEFT		CLP-950			
*	1	V5595300	Side Board	LEFT		CLP-950C			
*	1	V5309700	Side Board	LEFT		CLP-950M			
	2	VS295500	Angle Bracket	LEFT					05
	3	VZ885300	Angle Bracket	2.0 L MFZN2					04
	4	VQ958300	Holder, Back Board						05
	5	VZ972000	Angle, Stand	A				2	04
	7	V5574100	Stand Base Assembly	LEFT		CLP-950			
*	7	V5574300	Stand Base Assembly	LEFT		CLP-950C			
*	7	V5774200	Stand Base Assembly	LEFT		CLP-950M			
	7a	CB006650	Foot					2	03
	7b	EM040020	Flat Head Tapping Screw-1	4.0X20 MFZN2BL				4	01
	8	EP030580	Bind Head Tapping Screw-1	3.5X20 MFZN2BL				14	01
	10	VV444000	Pan Head Tapping Screw-1	4.0X65 MFZN2Y				3	01
	11	V5251600	Nut	TYPE M M6XL33				2	
	12	DB001270		DIA8X27L				2	05
		--	Side Board Assembly	RIGHT		CLP-950	(V494230)		
		--	Side Board Assembly	RIGHT		CLP-950C	(V559580)		
		--	Side Board Assembly	RIGHT		CLP-950M	(V530960)		
	1	V4960800	Side Board	RIGHT		CLP-950			
*	1	V5595900	Side Board	RIGHT		CLP-950C			
*	1	V5309800	Side Board	RIGHT		CLP-950M			
	2	VS295600	Angle Bracket	RIGHT					05
	3	VZ885300	Angle Bracket	2.0 L MFZN2					04
	4	VQ958300	Holder, Back Board						05
	5	VZ972000	Angle, Stand	A				2	04
	7	V5574400	Stand Base Assembly	RIGHT		CLP-950			
*	7	V5574600	Stand Base Assembly	RIGHT		CLP-950C			
*	7	V5574500	Stand Base Assembly	RIGHT		CLP-950M			
	7a	CB006650	Foot					2	03
	7b	EM040020	Flat Head Tapping Screw-1	4.0X20 MFZN2BL				4	01
	8	EP030580	Bind Head Tapping Screw-1	3.5X20 MFZN2BL				14	01
	10	VV444000	Pan Head Tapping Screw-1	4.0X65 MFZN2Y				3	01
	11	V5251600	Nut	TYPE M M6XL33				2	
	12	DB001270	Joint	DIA8X27L				2	05

*: New Parts

RANK: Japan only

■ PEDAL BOX ASSEMBLY

● **Bottom view**

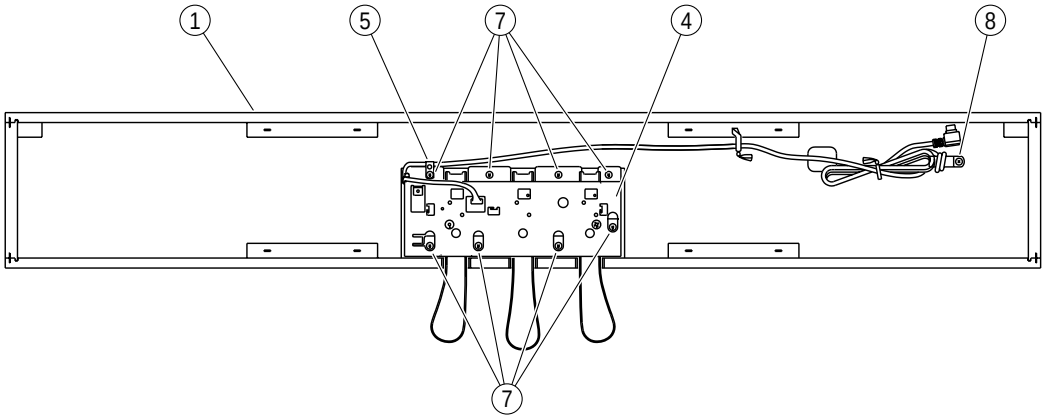

● **Front view**

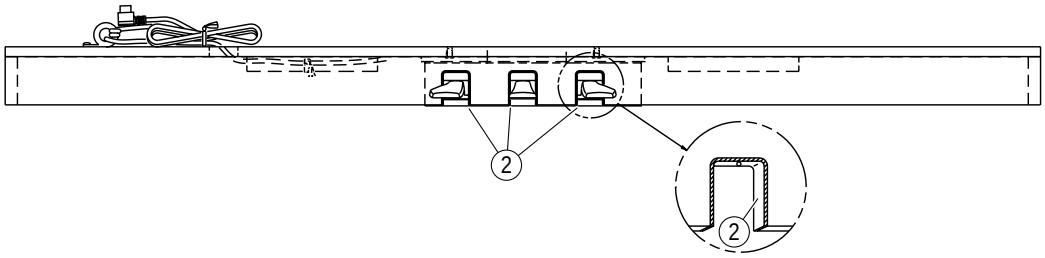

	REF NO.	PART NO.	DESCRIPTION			REMARKS		QTY	RANK
			PEDAL BOX ASSEMBLY			CLP-950			
		--	Pedal Box Assembly			CLP-950	(V494290)		
		--	Pedal Box Assembly			CLP-950C	(V559690)		
		--	Pedal Box Assembly			CLP-950M	(V531010)		
	1	**V4963100**	Pedal Box Wooden Assembly	J		CLP-950			
*	1	**V5597000**	Pedal Box Wooden Assembly			CLP-950C			
*	1	**V5597100**	Pedal Box Wooden Assembly	J		CLP-950M			
	1	**V5314200**	Pedal Box Wooden Assembly			CLP-950			
*	1	**V5310200**	Pedal Box Wooden Assembly			CLP-950C			
*	1	**V5314500**	Pedal Box Wooden Assembly	J		CLP-950M			
	2	**VU464300**	Felt	115X12X2 RE				3	03
	4	**V5967100**	Pedal Assembly						
	5	**CB065520**	Nylon Clamp	NK-3N					01
	7	**EP040230**	Bind Head Tapping Screw-1	4.0X14 MFZN2Y				8	01
	8	**03747270**	Truss Head Tapping Screw-1	4.0X12 MFZN2BL					

***: New Parts** **RANK: Japan only**

■ PEDAL ASSEMBLY

● Top view

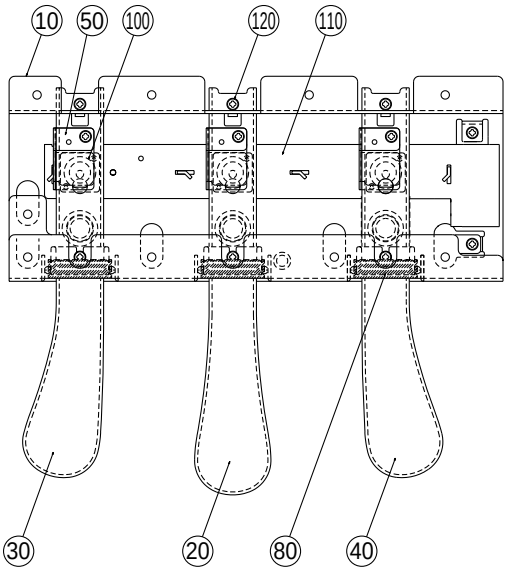

● Side view

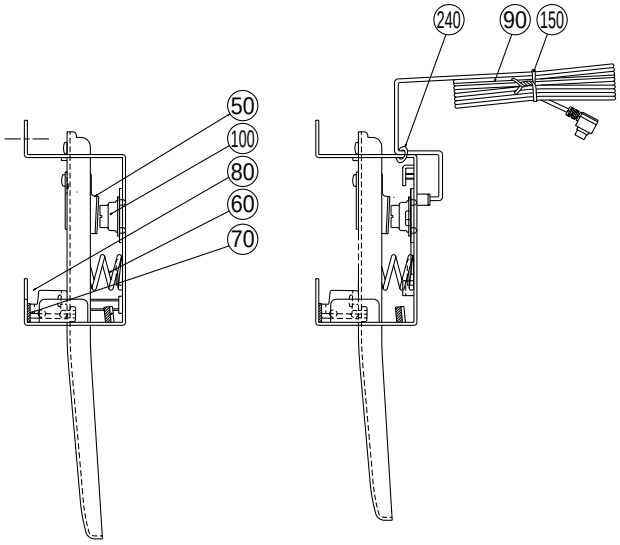

REF NO.	PART NO.	DESCRIPTION			REMARKS	QTY	RANK
		PEDAL ASSEMBLY			CLP-950		
	V5967100	Pedal Assembly					
10	**VU339700**	Pedal Frame					09
20	**VU362000**	Pedal Piece	CENTER		Sostenuto		08
30	**VU362100**	Pedal Piece	LEFT		Soft		08
40	**VU362200**	Pedal Piece	RIGHT		Damper		08
50	**VV433500**	Actuator	PEDAL			3	03
60	**VP348100**	Pedal Spring				3	03
70	**VU346500**	Felt	BL			6	03
80	**VU339800**	Shutter	PEDAL			3	03
90	**V0044700**	Connector Assembly	PK-LF				10
100	**VU456000**	Rubber Contact	1 PEDAL			3	03
110	**V2337300**	Circuit Board	PEDAL				07
120	**EP600190**	Bind Head Tapping Screw-B	3.0X8 MFZN2BL			10	01
150	**CB033610**	Cord Binder	L=160				01
240	**CB069250**	Cord Holder	BK-1			2	01

*: New Parts

RANK: Japan only

■ FRONT BOARD ASSEMBLY

● **Rear view**

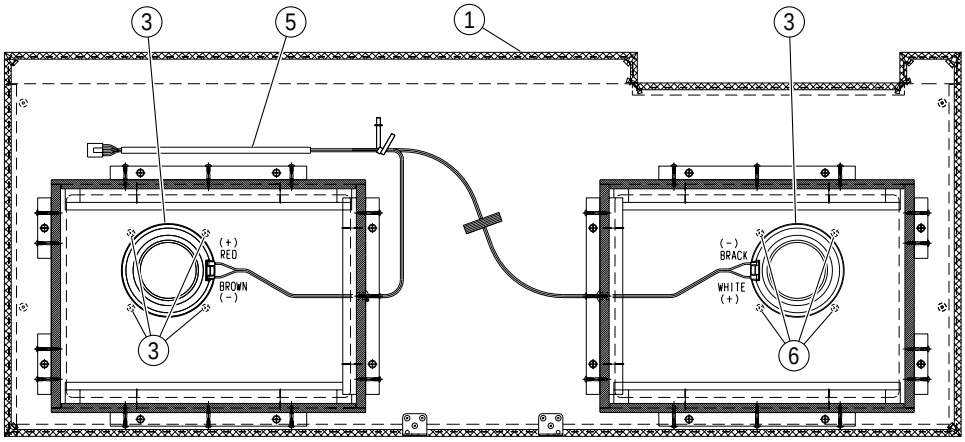

● **Front view**

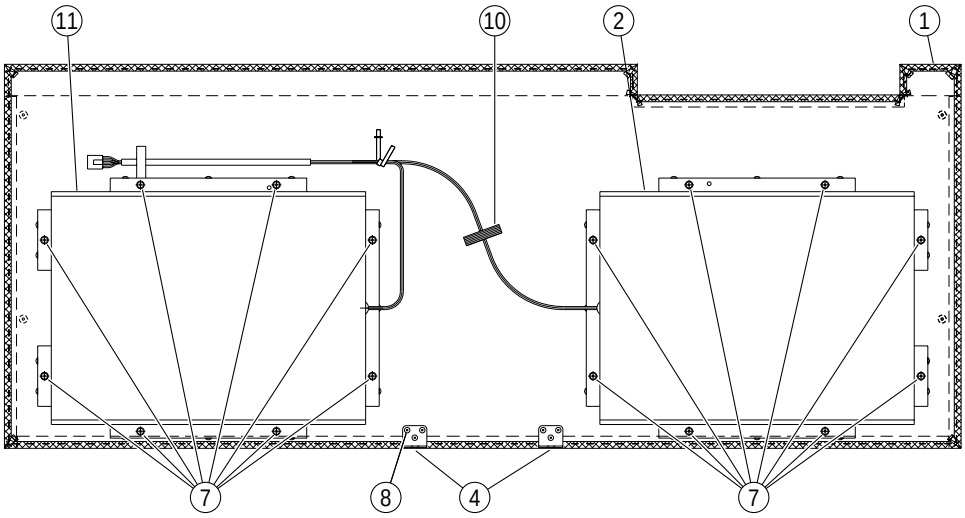

	REF NO.	PART NO.	DESCRIPTION			REMARKS		QTY	RANK
			FRONT BOARD ASSEMBLY			CLP-950			
		--	Front Board Assembly			CLP-950	(V496200)		
		--	Front Board Assembly			CLP-950C			
		--	Front Board Assembly			CLP-950M			
	1	V4962300	Front Board Unit			CLP-950			
*	1	V5594000	Front Board Unit			CLP-950C			
*	1	V5403400	Front Board Unit			CLP-950M			
	2	V5697500	Speaker Box Assembly	LEFT					
	3	XY775A00	Speaker	13.0cm 8 ohm 60W				2	
	4	VZ972000	Angle, Stand	A				2	04
	5	--	Connector Assembly	W-SP			(V531590)		
	6	VB931700	Truss Head Screw	4.0X14 MFZN2BL				8	01
	7	V5877100	Truss Head Tapping Screw-1	4.0X30 MFZN2Y				16	
	8	EP030340	Bind Head Tapping Screw-1	3.5X12 MFZN2BL				6	01
	10	--	Adhesive Tape	12X70			(VI59810)		
	11	V5724400	Speaker Box Assembly	RIGHT					

***: New Parts** **RANK: Japan only**

■TOP BOARD ASSEMBLY

●Top view

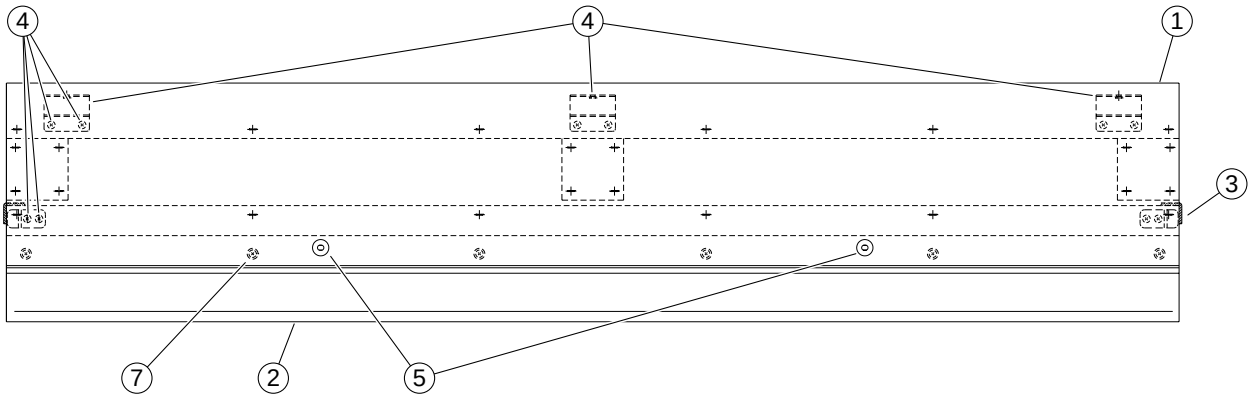

	REF NO.	PART NO.	DESCRIPTION			REMARKS		QTY	RANK
			TOP BOARD ASSEMBLY			CLP-950			
		V4956400	Top Board Assembly			CLP-950			
*		**V5775000**	Top Board Assembly			CLP-950C			
*		**V5307200**	Top Board Assembly			CLP-950M			
	1	**--**	Top Board Unit			CLP-950	(V495840)		
	1	**--**	Top Board Unit			CLP-950C	(V577680)		
	1	**--**	Top Board Unit			CLP-950M	(V530730)		
	2	**--**	Top Board Front Rail			CLP-950	(V495890)		
	2	**--**	Top Board Front Rail			CLP-950C	(V577690)		
	2	**--**	Top Board Front Rail			CLP-950M	(V530760)		
	3	**VQ485700**	Holder, Top Board	FRONT				2	03
	4	**VQ485800**	Holder, Top Board	REAR				3	05
	5	**VF179400**	Bushing	BL				2	01
	5	**V6250800**	Bushing	BROWN		CLP-950C		2	
	6	**EP040170**	Bind Head Tapping Screw-1	4.0X16 MFZN2Y				10	01
	7	**EN630260**	Truss Head Tapping Screw-1	3.5X20 MFZN2Y				6	

***: New Parts** **RANK: Japan only**

■ MUSIC REST ASSEMBLY

● **Rear view**

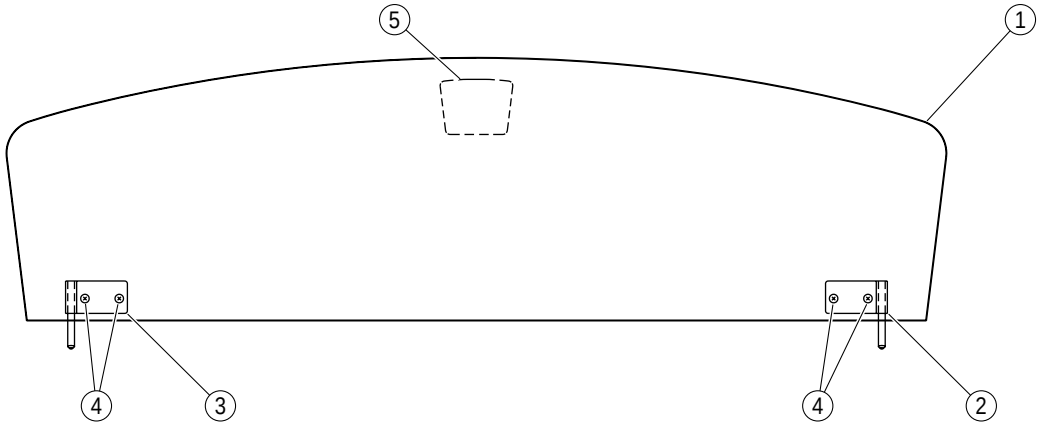

	REF NO.	PART NO.	DESCRIPTION			REMARKS		QTY	RANK
			MUSIC REST ASSEMBLY			CLP-950			
		V4956200	Music Rest Assembly			CLP-950			
*		**V5774200**	Music Rest Assembly			CLP-950C			
*		**V5297400**	Music Rest Assembly			CLP-950M			
	1	**--**	Music Rest			CLP-950	(V529730)		
	1	**--**	Music Rest			CLP-950C	(V578930)		
	1	**--**	Music Rest			CLP-950M	(V529750)		
	2	**VF055200**	Angle Bracket	LEFT					05
	3	**VF055300**	Angle Bracket	RIGHT					05
	4	**20404200**	Bind Head Tapping Screw-1	3.0X10 MFZN2BL				4	
	5	**V5782300**	Badge						

***: New Parts** **RANK: Japan only**

■ SIDE COVER ASSEMBLY

● **Side view**

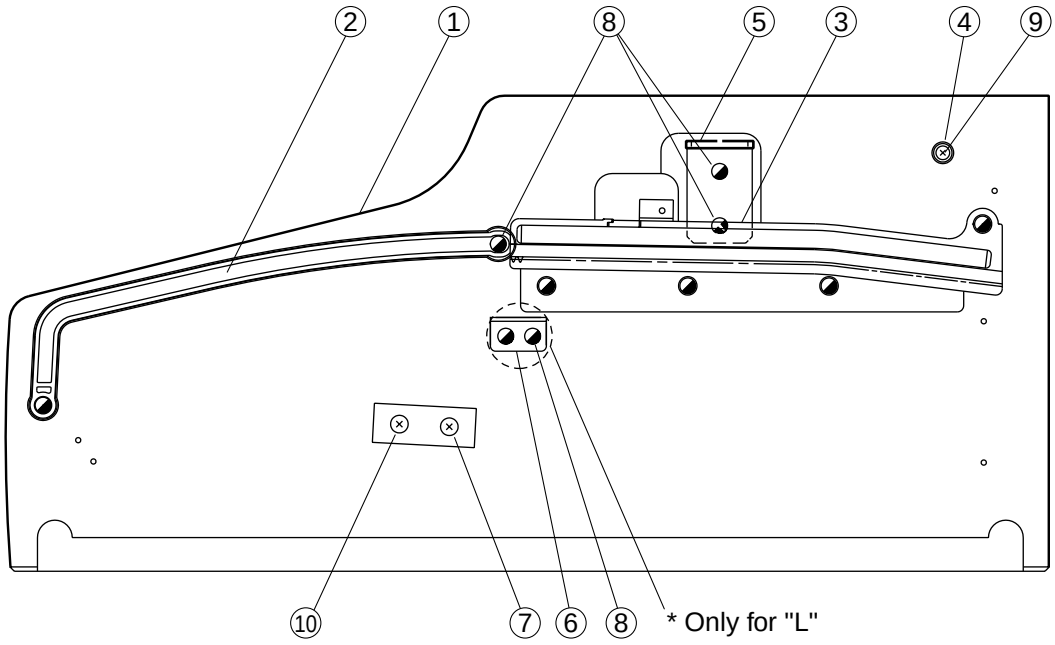

	REF NO.	PART NO.	DESCRIPTION			REMARKS		QTY	RANK
			SIDE COVER ASSEMBLY			CLP-950			
		V4956500	Side Cover Assembly	LEFT		CLP-950			
*		**V5775100**	Side Cover Assembly	LEFT		CLP-950C			
*		**V5305400**	Side Cover Assembly	LEFT		CLP-950M			
	1	**--**	Side Cover	LEFT		CLP-950	(V495900)		
	1	**--**	Side Cover	LEFT		CLP-950C	(V577700)		
	1	**--**	Side Cover	LEFT		CLP-950M	(V529220)		
	2	**V4959400**	Guide Rail	LEFT		CLP-950/M			
*	2	**V5777200**	Guide Rail	LEFT		CLP-950C			
	3	**V5286600**	Rack Assembly	LEFT					
	4	**CB033070**	Stopper						03
	5	**--**	Holder Assembly, Top Board				(V257770)		
	6	**--**	Angle P				(V588240)		
	7	**--**	Creat B	18 50			(V520850)		
	8	**EP030260**	Bind Head Tapping Screw-1	3.5X16 MFZN2BL				6	01
	9	**EM040080**	Flat Head Tapping Screw-1	4.0X20 MFZN2Y					
	10	**VU952600**	Truss Head Tapping Screw-1	3.5X30 MFZN2BL				2	01
	12	**EP030470**	Bind Head Tapping Screw-1	3.5X20 MFZN2Y				4	01
		V4956600	Side Cover Assembly	RIGHT		CLP-950			
*		**V5775200**	Side Cover Assembly	RIGHT		CLP-950C			
*		**V5305500**	Side Cover Assembly	RIGHT		CLP-950M			
	1	**--**	Side Cover	RIGHT		CLP-950	(V495910)		
	1	**--**	Side Cover	RIGHT		CLP-950C	(V577710)		
	1	**--**	Side Cover	RIGHT		CLP-950M	(V529240)		
	2	**V4959500**	Guide Rail	RIGHT		CLP-950/M			
*	2	**V5777300**	Guide Rail	RIGHT		CLP-950C			
	3	**V5286700**	Rack Assembly	RIGHT					
	4	**CB033070**	Stopper						03
	5	**--**	Holder Assembly, Top Board				(V257770)		
	7	**--**	Creat B	18 50			(V520850)		
	8	**EP030260**	Bind Head Tapping Screw-1	3.5X16 MFZN2BL				8	01
	9	**EM040080**	Flat Head Tapping Screw-1	4.0X20 MFZN2Y					
	10	**VU952600**	Truss Head Tapping Screw-1	3.5X30 MFZN2BL				2	01
	12	**EP030470**	Bind Head Tapping Screw-1	3.5X20 MFZN2Y				4	01

***: New Parts** **RANK: Japan only**

■ END BLOCK ASSEMBLY

● END BLOCK ASSEMBLY (L)

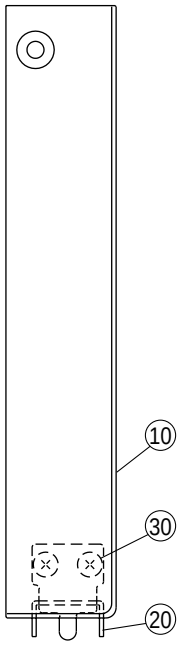

● END BLOCK ASSEMBLY (R)

● Side view

● Top view

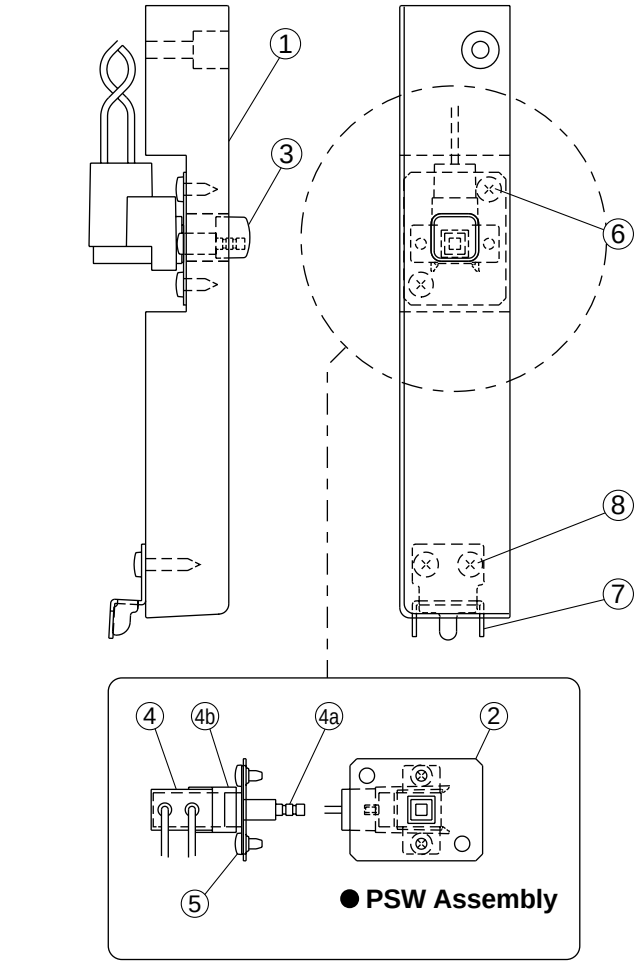

● PSW Assembly

	REF NO.	PART NO.	DESCRIPTION			REMARKS		QTY	RANK
			END BLOCK ASSEMBLY			CLP-950			
		--	End Block Assembly	LEFT		CLP-950	(V533560)		
		--	End Block Assembly	LEFT		CLP-950C	(V559500)		
		--	End Block Assembly	LEFT		CLP-950M	(V533570)		
	10	V5193600	End Block	LEFT		CLP-950			
*	10	V5595100	End Block	LEFT		CLP-950C			
*	10	V5309300	End Block	LEFT		CLP-950M			
	20	--	Angle	H 1.2 L			(V533550)		
	30	EP030260	Bind Head Tapping Screw-1	3.5X16 MFZN2BL				2	01
		--	End Block Assembly	RIGHT		CLP-950	(V528550)		
		--	End Block Assembly	RIGHT		CLP-950C	(V559470)		
		--	End Block Assembly	RIGHT		CLP-950M	(V530910)		
	1	V5193700	End Block	RIGHT		CLP-950			
*	1	V5594800	End Block	RIGHT		CLP-950C			
*	1	V5309200	End Block	RIGHT		CLP-950M			
	2	--	Angle, PSW	0.8 I			(V522000)		
	3	VF663400	Knob	BL		power			02
	3	V6250700	Knob	BROWN		power CLP-950C			
	4	VS353700	Power Switch Assembly						08
⚠	4a	VC843500	Push Switch	SDDLB1216A J.U.C.S		power			03
	4b	--	Switch Cover	IVOLY			(V580080)		
	5	EP600230	Bind Head Tapping Screw-B	3.0X6 MFZN2BL				2	01
	6	EP030320	Bind Head Tapping Screw-1	3.5X10 MFZN2BL				2	01
	7	--	Angle	H 1.2 L			(V533550)		
	8	EP030260	Bind Head Tapping Screw-1	3.5X16 MFZN2BL				2	01

*: New Parts

RANK: Japan only

■ KEYBOARD ASSEMBLY

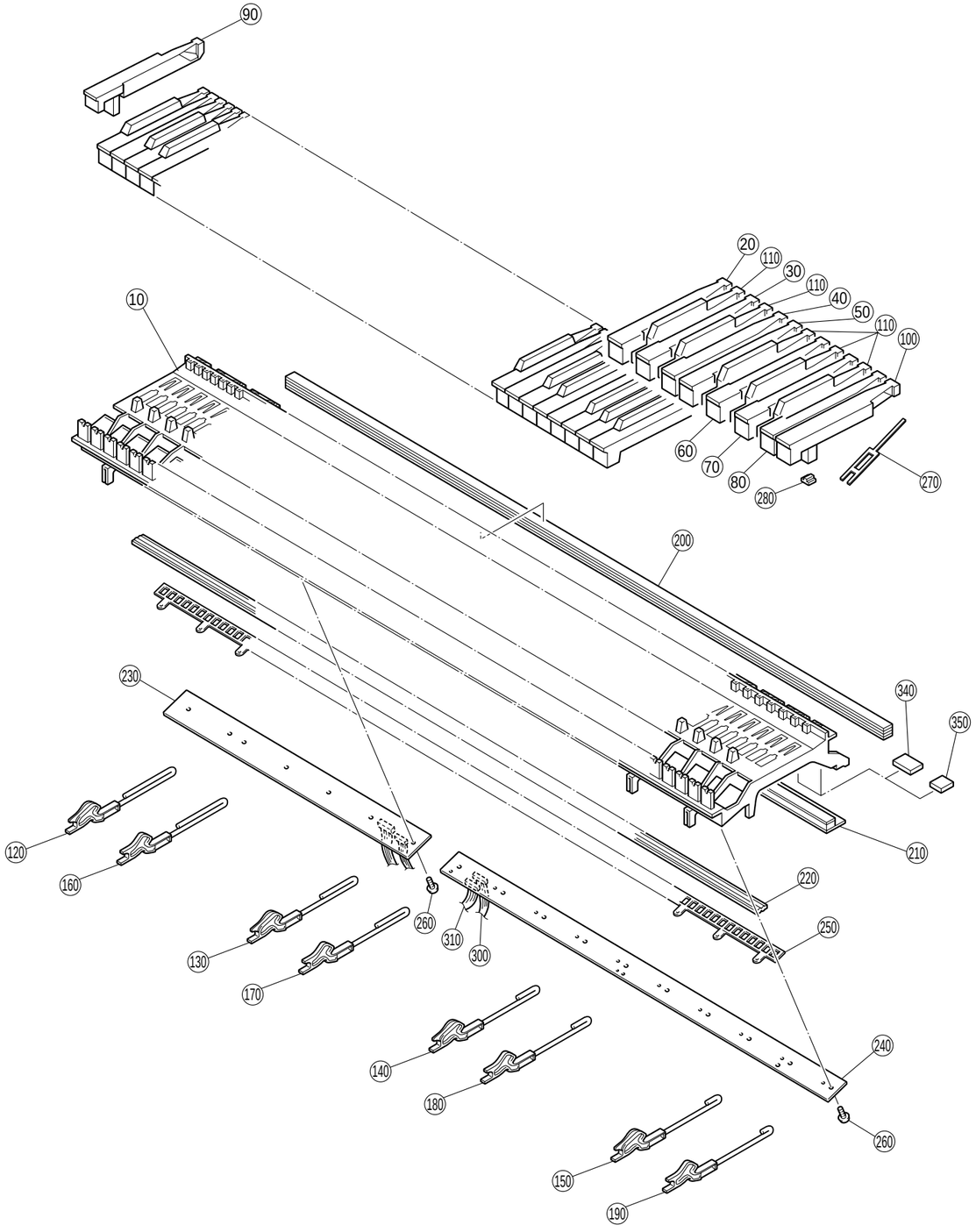

REF NO.	PART NO.	DESCRIPTION			REMARKS	QTY	RANK
		KEYBOARD ASSEMBLY			CLP950		
	VU431800	Keyboard Assemby	A88 K6				55
10	**--**	MK Frame			(VU42210)		
20	**VU101000**	White Key	C			7	05
30	**VU101100**	White Key	D			7	05
40	**VU101200**	White Key	E			7	05
50	**VU101300**	White Key	F			7	05
60	**VU101400**	White Key	G			7	05
70	**VU101500**	White Key	A			7	05
80	**VU101600**	White Key	B			8	05
90	**VU101700**	White Key	A'				05
100	**VU101800**	White Key	C'				05
110	**VU102100**	Black Key	BL			36	05
120	**VU102200**	Hammer, White Key			A1-F1	13	06
130	**VU102300**	Hammer, White Key			G1-E3	13	06
140	**VU102400**	Hammer, White Key			F3-D5	13	06
150	**VU102500**	Hammer, White Key			E5-C7	13	06
160	**VU102600**	Hammer, Black Key			A#1-F#1	9	06
170	**VU102700**	Hammer, Black Key			G#1-D#3	9	06
180	**VU102800**	Hammer, Black Key			F#3-C#5	9	06
190	**VU102900**	Hammer, Black Key			D#5-A#6	9	06
200	**VU342100**	Stopper					09
210	**VU342200**	Stopper					09
220	**VY693500**	Rubber Contact	GH A88 2M				11
230	**VU342300**	Circuit Board	AEXL88-L				12
240	**VU342400**	Circuit Board	AEXL88-H				13
250	**VU266500**	Insulation Spacer	AEX88				06
260	**VT413400**	Bind Head Tapping Screw-P	3.0X10 MFZN2			17	01
270	**VZ417900**	Spring	GH WH/BL			88	03
270	**V2798500**	Spring	GH WH/BL			88	
280	**VU237500**	Rubber				88	03
280	**V2211300**	Rubber 2				88	03
300	**VU341800**	Connector Assemblt	9P BLOCK				06
310	**VU341900**	Connector Assembly	12P NOTE				07
330	**VV032300**	Protect Wire	12				02
340	**VV467900**	Stopper Support A	35.5 20 *			7	03
350	**VV468100**	Stopper Support B	24 20 -			12	03

***: New Parts** **RANK: Japan only**

■ PANEL ASSEMBLY

● Bottom of the panel

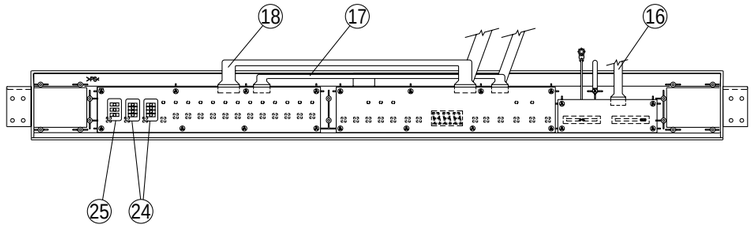

● Bottom of the panel

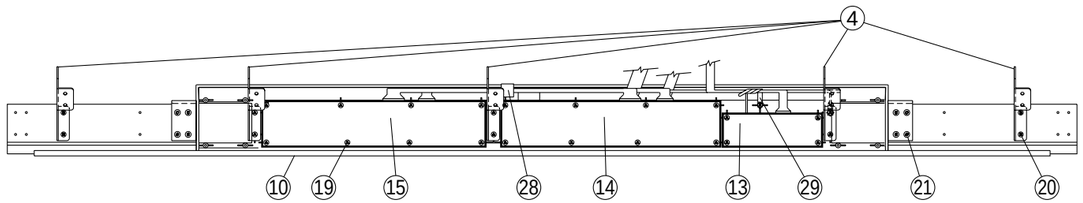

● Top of the panel

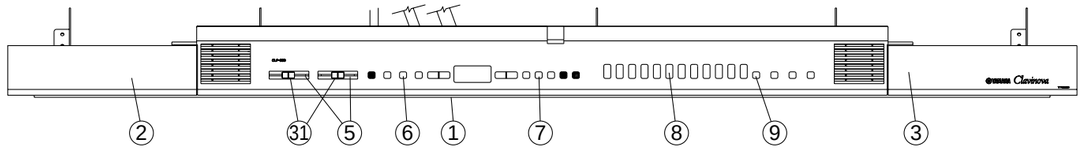

	REF NO.	PART NO.	DESCRIPTION			REMARKS	QTY	RANK
			PANEL ASSEMBLY			CLP-950		
		--	Panel Assembly			CLP-950 (V495700)		
		--	Panel Assembly			CLP-950C (V577550)		
		--	Panel Assembly			CLP-950M (V530560)		
	1	V5490800	Panel Sub Assembly					
	1	V6250300	Panel Sub Assembly			CLP-950C		
	2	V5276800	Panel			CLP-950		
*	2	V5777500	Panel			CLP-950C		
*	2	V5305800	Panel			CLP-950M		
	3	V5276700	Panel R			CLP-950		
*	3	V5777600	Panel R			CLP-950C		
*	3	V5305900	Panel R			CLP-950M		
	4	--	Panel Holder Assembly			(V495750)	5	
	5	V5111200	Slide Knob			MASTER VOLUME,BRILLIANCE	2	
	6	V5182000	Button	A		DEMO,TRANSPOSE,FUNCTION		
	7	V5182100	Button	B		START/STOP,TEMPO/FUNCTION -/NO,+/YES,PRESET SONG TRACK1,TRACK2,START/STOP REC		
	8	V5182200	Button	C		GRAND PIANO1,GRAND PIANO2 E.PIANO1,E.PIANO2, HARPSICHORD,VIBRAPHONE, CHURCHORGAN,JAZZ ORGAN, STRINGS,CHOIR,WOOD BASS, E.BASS		
	9	V5182300	Button	D		SPLIT,REVERB,EFFECT,TOUCH		
	10	VU638700	Felt	MK				05
	13	V5124000	Circuit Board	MV				
	14	V5123800	Circuit Board	PNL				
	15	V5123900	Circuit Board	PNR				
	16	--	Connector Assembly	VOL L=400		(V222620)		
	17	--	Connector Assembly	PN1		(V523260)		
	18	--	Connector Assembly	PN2		(V523270)		
	19	EP600250	Bind Head Tapping Screw-B	3.0X8 MFZN2Y			27	01
	20	EP030230	Bind Head Tapping Screw-1	3.5X10 MFZN2Y			6	01
	21	EP030340	Bind Head Tapping Screw-1	3.5X12 MFZN2BL			8	01
	24	--	Shader A			(V534440)	2	
	25	--	Shader B			(V534450)		
	28	VP834600	Adhesive Tape	12X50				02
	29	CB817510	Cord Binder	S-14B				03
	30	--	Angle, Plate			(V588250)		
	31	--	Dustproof Cloth			(V591130)	2	

*: New Parts

RANK: Japan only

■ KEY COVER ASSEMBLY

● **Top view**

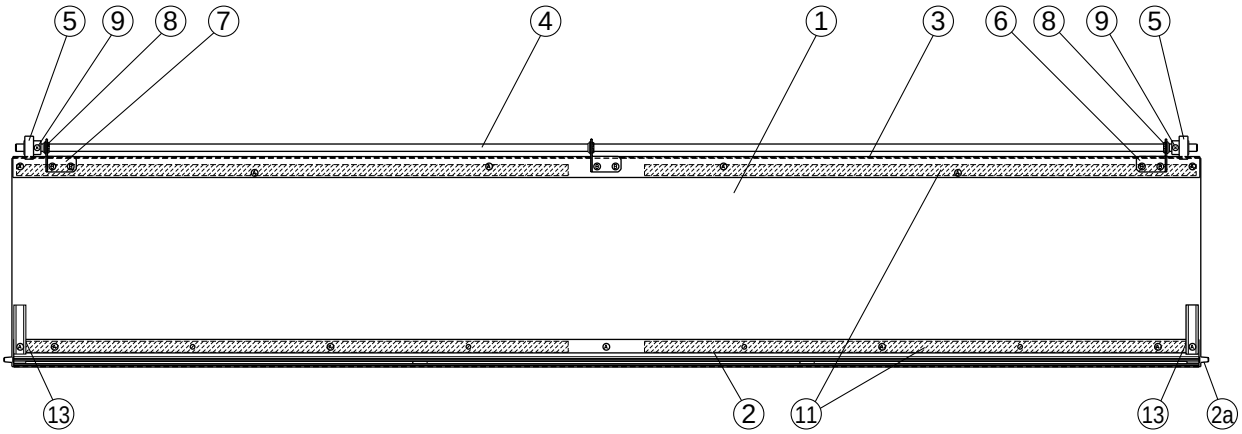

● **Side view**

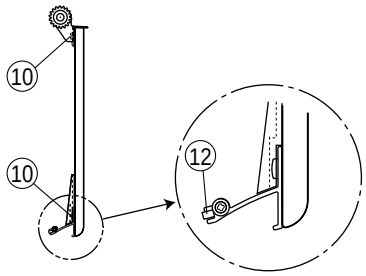

	REF NO.	PART NO.	DESCRIPTION			REMARKS		QTY	RANK
			KEY COVER ASSEMBLY			CLP-950			
		V5385100	Key Cover Assembly			CLP-950			
*		**V5776600**	Key Cover Assembly			CLP-950C			
*		**V5305700**	Key Cover Assembly			CLP-950M			
	1	**--**	Slide Cover			CLP-950	(V538520)		
	1	**--**	Slide Cover			CLP-950C	(V577810)		
	1	**--**	Slide Cover			CLP-950M	(V530630)		
	2	**V4961900**	Sash F Assembly						
	2a	**V4964400**	Guide Pin					2	
	3	**--**	Sash R				(V496180)		
	4	**--**	Rod				(V496240)		
	5	**VT190400**	Gear					2	03
	6	**VV285600**	Holder, Rod	LEFT					03
	7	**VV285700**	Holder, Rod	RIGHT				2	03
	8	**VS368500**	Bushing					3	03
	9	**EG330060**	Bind Head Screw	3.0X10 MFZN2Y				2	01
	10	**VN920900**	Bind Head Tapping Screw-1	3.5X8 MFZN2BL				17	01
	11	**--**	Adhesive Tape	#500 600X12			(VO02370)	4	
	12	**VU457600**	Cushion	421X2.5X4				3	03
	13	**V5902900**	Block					2	
	14	**EP030230**	Bind Haed Tapping Screw-1	3.5X10 MFZN2Y				2	01

***: New Parts** **RANK: Japan only**

■ MA120 ASSEMBLY

● **Top view**

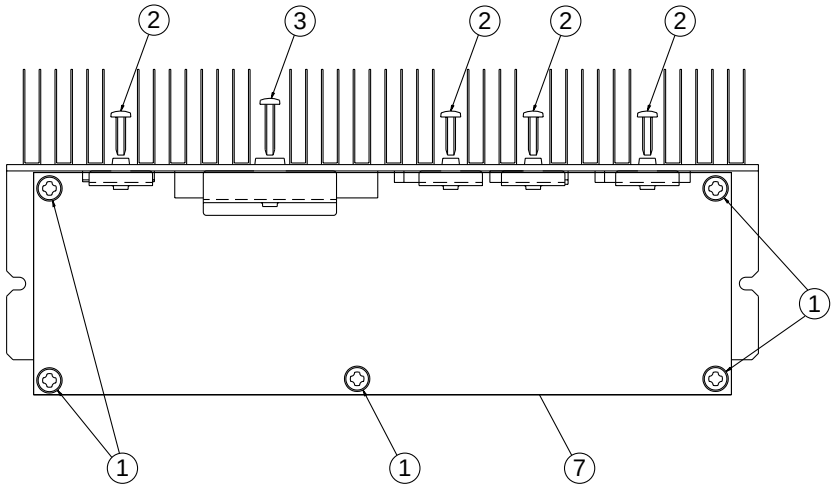

● **Front view**

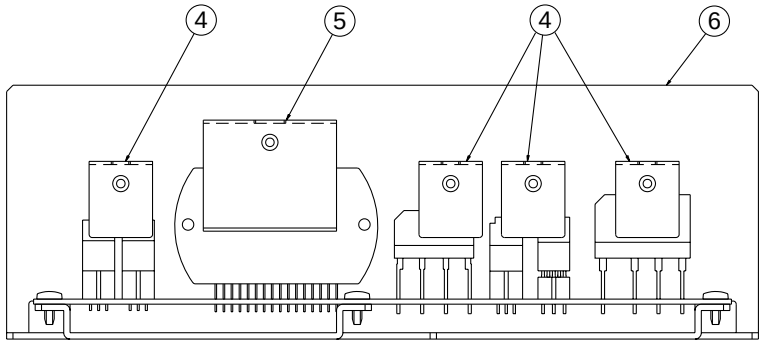

REF NO.	PART NO.	DESCRIPTION			REMARKS	QTY	RANK
		MA120 ASSEMBLY			CLP-950		
	VT492000	MA120 Assembly	J,U		J,U		23
	VT492100	MA120 Assembly	E,GBR,N		B,E,N		23
1	**EP640410**	Bind Head Tapping Screw-B	4.0X8 MFZN2Y			5	01
2	**EP600220**	Bind Head Tapping Screw-B	3.0X10 MFZN2Y			4	01
3	**EP600390**	Bind Head Tapping Screw-B	3.0X16 MFZN2Y				01
4	**VT461100**	Transistor Holder	A			4	03
5	**VT461200**	Transistor Holder	B				03
6	**VT444300**	Heat Sink					11
7	**VT143200**	Circuit Board	MA120 J,U		J,U		20
7	**VT143300**	Circuit Board	MA120 E,GBR,N		B,E,N		20

***: New Parts** **RANK: Japan only**

■ FU120L ASSEMBLY

● **Top view**

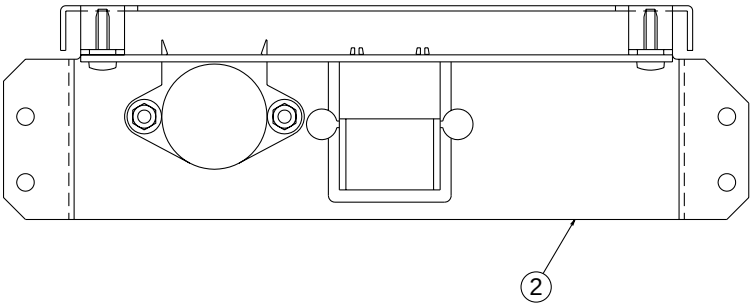

● **Front view**

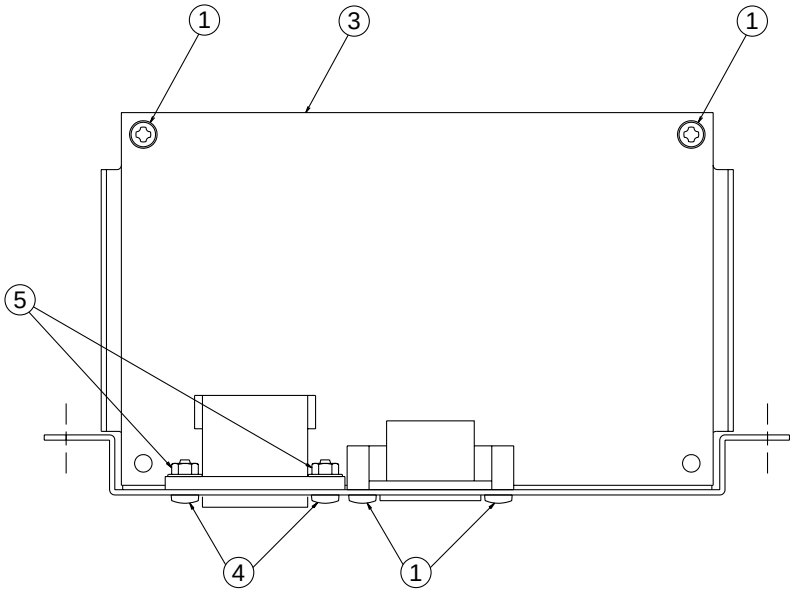

REF NO.	PART NO.	DESCRIPTION			REMARKS		QTY	RANK
		FU120L ASSEMBLY			CLP950			
	VV651100	FU120L Assembly	J		J			13
	VV651300	FU120L Assembly	U		U			
	VV651400	FU120L Assembly	E		B,E			13
	VV651500	FU120L Assembly	N		N			12
1	**EP600190**	Bind Head Tapping Screw-B	3.0X8 MFZN2BL				4	01
2	**VV605700**	Panel, AC Inlet			J,U,B,E			07
2	**VV605600**	Panel, AC Inlet			N			07
3	**VV649900**	Circuit Board	FU120L J		J			12
3	**--**	Circuit Board	FU120L U		U	(VV65020)		
3	**--**	Circuit Board	FU120L E		B,E	(VV65040)		
3	**--**	Circuit Board	FU120L N		N	(VV65050)		
4	**EG330380**	Bind Head Screw	3.0X10 MFZN2BL		N		2	01
5	**VA211900**	Hexagonal Nut	3.0 MFZN2Y		N		2	01

***: New Parts** **RANK: Japan only**

■ JACK UNIT

● **Top view**

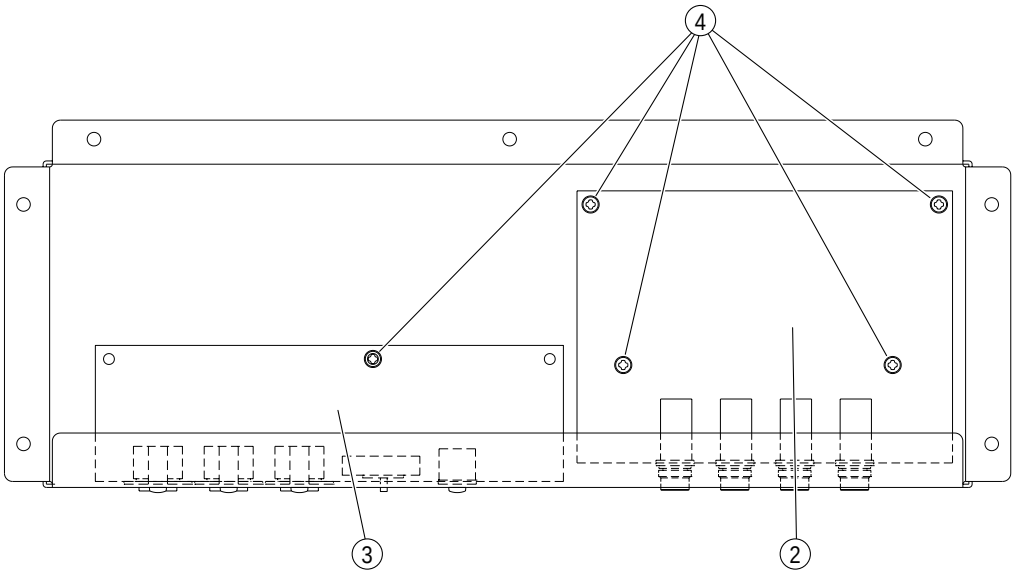

● **Front view**

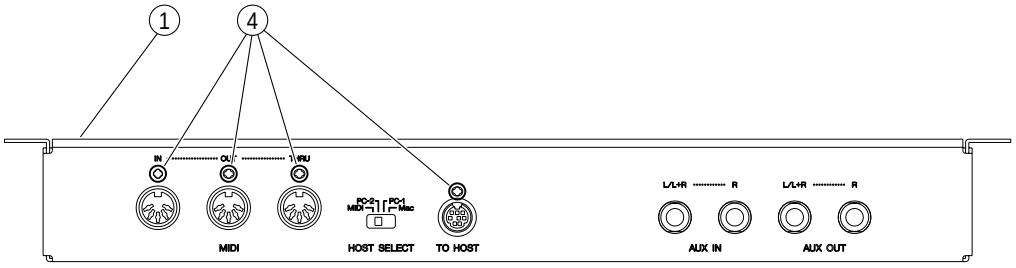

REF NO.	PART NO.	DESCRIPTION			REMARKS	QTY	RANK
		JACK UNIT			CLP950		
	--	Jack Unit			(V497380)		
1	--	Plate			(V495760)		
2	V5141900	Corcuit Board	A-JACK				
3	V4939000	Corcuit Board	D-JACK				
4	EP600190	Bind Head Tapping Screw-B	3.0X8 MFZN2BL			9	01
5	--	Connector Assembly	L=100		(V590820)		

*: New Parts

RANK: Japan only

■ HEADPHONES JACK ASSEMBLY

● **Side view**

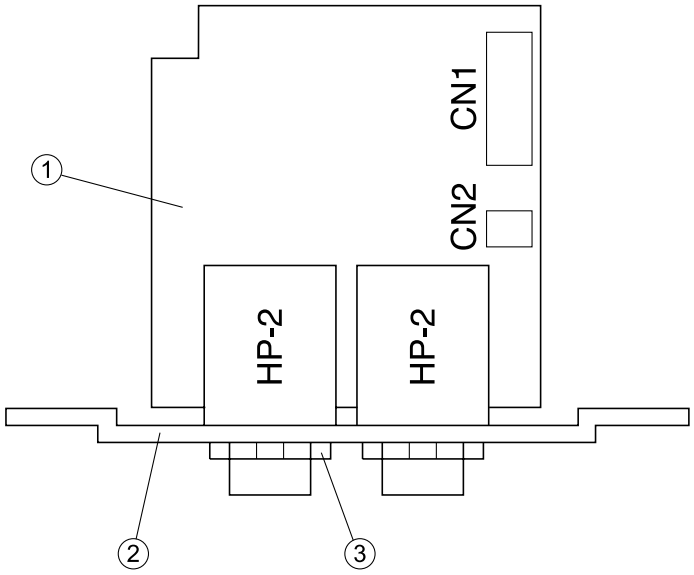

REF NO.	PART NO.	DESCRIPTION			REMARKS	QTY	RANK
		HEADPHONES JACK ASSEMBLY			CLP950		
	--	Headphones Jack Assembly	HP		(VT15870)		
1	**VT089300**	Circuit Board	HP				09
2	**VN631800**	Plate					04
3	**VB508600**	Hexagonal Nut	12.0 14X2 MFZN2BL			2	01
	--	Headphones Jack Assembly	HP		(V004750)		
1	**V0047600**	Circuit Board	HP (YI)				
2	**VN631800**	Plate					04
3	**VB508600**	Hexagonal Nut	12.0 14X2 MFZN2BL			2	01

***: New Parts** **RANK: Japan only**

■ BENCH (BC-15)-CLP-950, 950C Only

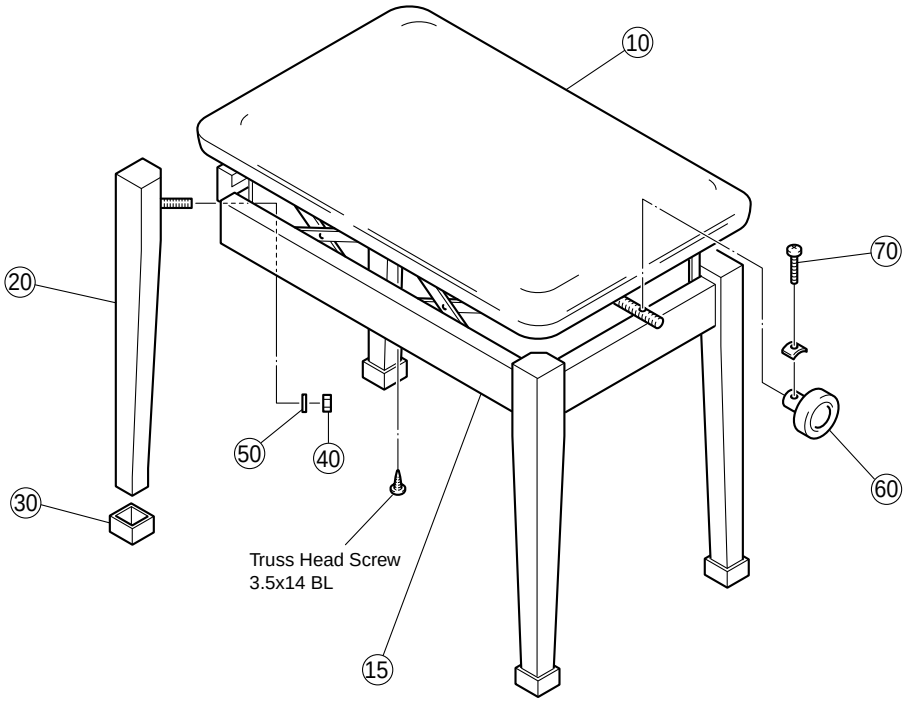

	REF NO.	PART NO.	DESCRIPTION			REMARKS		QTY	RANK
			BENCH (BC-15)			CLP-950/C			
		--	Bench Set Assembly	BC-15		CLP-950 J	(VU42180)		
		--	Bench Set Assembly	BC-15CH (U)		CLP-950C J	(V553130)		
	10	NX817860	Bench Board Assembly			CLP-950			14
*	10	AAX14820	Bench Board Assembly	CH		CLP-950C			
	15	--	Lift Assembly			CLP-950	(AX01011)		
*	15	AAX14830	Lift Assembly	CH		CLP-950C			
	20	AX817680	Leg Assembly			CLP-950		4	15
*	20	AAX14840	Leg Assembly	CH		CLP-950C		4	
	30	CX816010	Cap			CLP-950		4	03
	30	AAX01110	Cap	BR		CLP-950C		4	
	40	EX001060	Hexagonal Nut	#1 10X1.25 MFZN2Y			(0376125)	4	01
	50	03765820	Spring Washer	#2 10.0 MFZN2Y				4	01
	60	CX816020	Knob			CLP-950			07
	60	AAX01120	Knob			CLP-950C			01
	70	VL064000	Pan Head Tapping Screw-S	4.0X20 BL					01
	80	VT655900	Wrench						05

***: New Parts** **RANK: Japan only**

■ BENCH (BC-100)

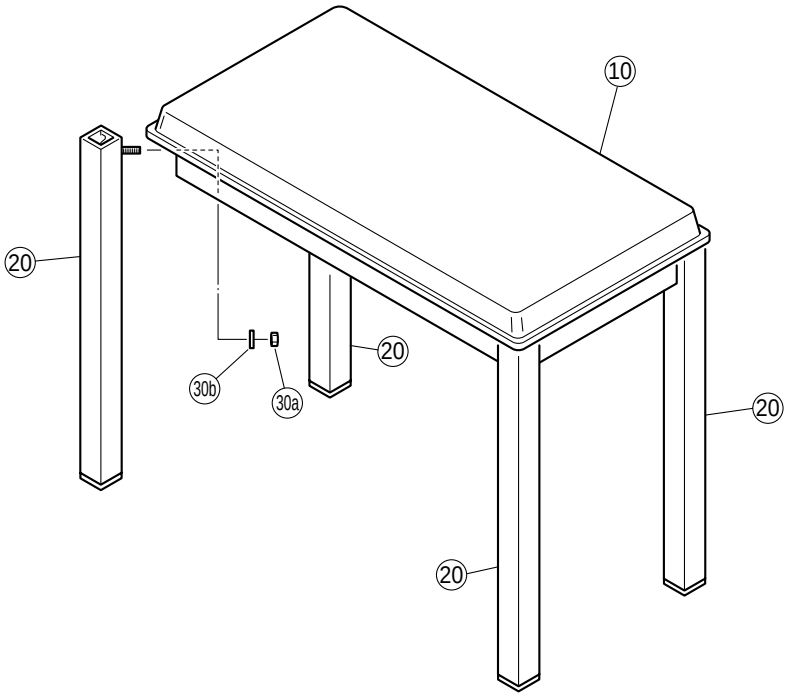

	REF NO.	PART NO.	DESCRIPTION			REMARKS		QTY	RANK
			BENCH (BC-100)			CLP-950			
		--	Bench Set	BC-100		UN	(V553140)		
		--	Bench Set	BC-100 CH		CLP-950C U, N	(V553160)		
		--	Bench Set	BC-100 MH		CLP-950M	(V553150)		
	10	V5532900	Bench Board Assembly			CLP-950			
*	10	V5533100	Bench Board Assembly	CH		CLP-950C			
*	10	V5533000	Bench Board Assembly	MH		CLP-950M			
	10a	VT655900	Wrench						05
	20	V5533200	Leg Assembly			CLP-950		4	
*	20	V5533400	Leg Assembly	CH		CLP-950C		4	
*	20	V5533300	Leg Assembly	MH		CLP-950M		4	
	30	VS530500	Screw Set						03
	30a	03761250	Hexagonal Nut	#1 10.0X1.25 MFZN2				4	01
	30b	03765820	Spring Washer	#2 10.0 MFZN2Y				4	01

***: New Parts** **RANK: Japan only**

■ ELECTRICAL PARTS

REF NO.	PART NO.	DESCRIPTION			REMARKS	QTY	RANK
		ELECTRICAL PARTS			CLP950		
	VU342400	Circuit Board	AEXL88-H		(XR776C0)		13
	VU342300	Circuit Board	AEXL88-L		(XR775C0)		12
	V5141900	Circuit Board	A-JACK		(XW987B0)		
	V4938700	Circuit Board	DM		(XW985B0)		
	V4939000	Circuit Board	D-JACK		(XW982C0)		
	V4939100	Circuit Board	PEDAL		(XW982C0)		
	VV649900	Circuit Board	FU120L J		J (XS882A0)		12
	--	Circuit Board	FU120L U		U (XS882A0)(VV65020)		
	--	Circuit Board	FU120L BE		BE (XS882A0)(VV65040)		
	--	Circuit Board	FU120L N		N (XS882A0)(VV65050)		
	VT089300	Circuit Board	HP		(XQ390A0)		09
	V0047600	Circuit Board	HP		(XQ389A0)(XQ390A0)		
	VT143200	Circuit Board	MA120 J, U		J,U (XQ393E0)		20
	VT143300	Circuit Board	MA120 BEN		B,E,N (XQ393E0)		20
	V2403300	Circuit Board	NET1		(XT123B0)		
	VN637600	Circuit Board	PL(YCJ)		(XL151B0)		03
	VU659100	Circuit Board	PL(YMMA)		(XR898A0)		03
	V5124000	Circuit Board	MV		(XW986C0)		
	V5123800	Circuit Board	PNL		(XW986C0)		
	V5123900	Circuit Board	PNR		(XW986C0)		
	VU342400	Circuit Board	AEXL88-H		(XR776C0)		13
CN1	**VB390500**	Connector Base Post	PH- 9P TE				03
CN2	**VB390800**	Connector Base Post	PH-12P TE				01
D1	**VB941200**	Diode	1SS133,1SS176				01
-108	**VB941200**	Diode	1SS133,1SS176				01
	--	Dust Proof Cloth			(VU45980)		
	VU342300	Circuit Board	AEXL88-L		(XR775C0)		12
	--	Dust Proof Cloth			(VU45960)		
CL1	**VI653000**	Ceramic Resonator	CST4.00MGW040				01
CN1	**VB390400**	Connector Base Post	PH- 8P TE				01
CN2	**VB390500**	Connector Base Post	PH- 9P TE				03
CN3	**VB390800**	Connector Base Post	PH-12P TE				01
D1	**VB941200**	Diode	1SS133,1SS176				01
D2	**VB941200**	Diode	1SS133,1SS176				01
D5	**VB941200**	Diode	1SS133,1SS176				01
-72	**VB941200**	Diode	1SS133,1SS176				01
J1	**VD041700**	Jumper Wire	0.55				
J2	**VD041700**	Jumper Wire	0.55				
KSN2	**XR632A00**	IC	YMZ702-D		KSN2		09
RA1	**VU483500**	Resistor Array	RGLD12X103J				01
	FG644100	Ceramic Capacitor-F	0.01 50V Z		C: 1,2,3		01
	VF760000	Electrolytic Cap.-KS	100.00 10.0V		C: 5		01
	HF755100	Carbon Resistor	100.0 1/4 J		R: 2,3		01
	HF756100	Carbon Resistor	1.0K 1/4 J		R: 4		01
	HF759100	Carbon Resistor	1.0M 1/4 J		R: 1		01
	V5141900	Corcuit Board	A-JACK		(XW987B0)		
	VA078900	Jumper Wire	0.55				
CN200	**VB390400**	Connector Base Post	PH- 8P TE				01
CN210	**VB390700**	Connector Base Post	PH-11P TE				01
CN220	**VB390300**	Connector Base Post	PH- 7P TE				01
CN230	**LB918050**	Base Post Connector	XH 5P TE				01
CN240	**VB390500**	Connector Base Post	PH- 9P TE				03
CN250	**LB918060**	Base Post Connector	XH 6P TE				01
D140	**VB493900**	Diode	MA221				01
IC100	**XE518A00**	IC	UPC4574G2		OP AMP		03
IC140	**XT131A00**	IC	LA6517M-TE-R		OP AMP		04
IC160	**XY487A00**	IC	M5229FP		EQUALIZER		
IC180	**XY487A00**	IC	M5229FP		EQUALIZER		
JK500	**VS115400**	Phone Jack	LGR4609-7000		AUX IN L/L+R		01
JK510	**VS115400**	Phone Jack	LGR4609-7000		AUX IN R		01
JK520	**VS115400**	Phone Jack	LGR4609-7000		AUX OUT L/L+R		01
JK530	**VS115400**	Phone Jack	LGR4609-7000		AUX OUT R		01
J0241	**VA078900**	Jumper Wire	0.55				
L0501	**VT733400**	Coil	SBT-0210T				02
L0521	**GE300670**	Ferrite Bead	BL02RN2-R62T4				02
RY140	**KC001900**	Relay	DC RY12W				07

***: New Parts** **RANK: Japan only**

REF NO.	PART NO.	DESCRIPTION			REMARKS	QTY	RANK
RY520	**KC001900**	Relay	DC RY12W				07
TR220	**VV556400**	Transistor	2SC2412K Q,R,S				01
	UA353220	Mylar Capacitor	2200P 50V J		C: 176,196		01
	UA353390	Mylar Capacitor	3900P 50V J		C: 177,197		01
	UA353470	Mylar Capacitor	4700P 50V J		C: 175,195		01
	UA353560	Mylar Capacitor	5600P 50V J		C: 168,188		
	UA353680	Mylar Capacitor	6800P 50V J		C: 174,194		01
	UA354150	Mylar Capacitor	0.015 50V J		C: 169,189		
	UA354220	Mylar Capacitor	0.022 50V J		C: 164,184		
	UA354270	Mylar Capacitor	0.027 50V J		C: 166,167,186,187		01
	UA354470	Mylar Capacitor	0.047 50V J		C: 162,182		
	UA354680	Mylar Capacitor	0.068 50V J		C: 165,185		01
	VR168500	Monolithic Mylar Capacitor	ECQ-V1H154JL3		C: 161,163,181,183		01
	VR168600	Monolithic Mylar Capacitor	ECQ-V1H184JL3		C: 160,180		01
	UB012470	Monolithic Ceramic Cap.	B 470P 50V K		C: 170,190		01
	UB013100	Monolithic Ceramic Cap.	B 1000P 50V K		C: 145,155,501,502		01
	UB013180	Monolithic Ceramic Cap.	B 1800P 50V K		C: 101,111		01
	UB013390	Monolithic Ceramic Cap.	B 3900P 50V K		C: 100,110		01
	UB044100	Monolithic Ceramic Cap.	F 0.01 50V Z		C: 220,221		01
	UB045100	Monolithic Ceramic Cap.	F 0.1 50V Z		C: 106,107,109,123,124, 141,151,171,172,191, 192		01
	UB051390	Monolithic Ceramic Cap.	SL 39P 50V J		C: 121,131		01
	UB052100	Monolithic Ceramic Cap.	SL 100P 50V J		C: 122,132,143,153		01
	UB052150	Monolithic Ceramic Cap.	SL 150P 50V J		C: 103,113,140,150		01
	UB052180	Monolithic Ceramic Cap.	SL 180P 50V J		C: 102,112		01
	UR838100	Electrolytic Cap.	100.00 16.0V		C: 240,241		01
	UR866470	Electrolytic Cap.	4.7 50.0V		C: 142,152		01
	UN846470	Electrolytic Cap.-BP	4.7 25.0V		C: 104,114		01
	UN847470	Electrolytic Cap.-BP	47.00 25.0V		C: 144,154		01
	UN866100	Electrolytic Cap.-BP	1.00 50.0V		C: 106,116,120,130,173,193		01
	RD250000	Carbon Resistor (chip)	0.0 0.0 J		R: 143,153,225		01
	RD254330	Carbon Resistor (chip)	33.0 0.1 J		R: 142,152		01
	RD255560	Carbon Resistor (chip)	560.0 0.1 J		R: 520,530		01
	RD256100	Carbon Resistor (chip)	1.0K 0.1 J		R: 144,154		01
	RD256150	Carbon Resistor (chip)	1.5K 0.1 J		R: 242,243		01
	RD256180	Carbon Resistor (chip)	1.8K 0.1 J		R: 160,166,180,186		01
	RD256220	Carbon Resistor (chip)	2.2K 0.1 J		R: 100,110,168,177,188,197		01
	RD256270	Carbon Resistor (chip)	2.7K 0.1 J		R: 164,184		01
	RD256330	Carbon Resistor (chip)	3.3K 0.1 J		R: 105,115,162,171,182, 191,221,240,241		01
	RD256470	Carbon Resistor (chip)	4.7K 0.1 J		R: 101,111,140,150,170, 190,224,521,531		01
	RD256560	Carbon Resistor (chip)	5.6K 0.1 J		R: 175,195		01
	RD257100	Carbon Resistor (chip)	10.0K 0.1 J		R: 103,104,106,113,114, 116,120,130,141,145, 151,155		01
	RD257120	Carbon Resistor (chip)	12.0K 0.1 J		R: 102,112		01
	RD257150	Carbon Resistor (chip)	15.0K 0.1 J		R: 174,194		01
	RD257180	Carbon Resistor (chip)	18.0K 0.1 J		R: 161,163,165,167,169, 176,181,183,185,187, 189,196		01
	RD257330	Carbon Resistor (chip)	33.0K 0.1 J		R: 220		01
	RD257390	Carbon Resistor (chip)	39.0K 0.1 J		R: 121,131		01
	V4938700	Circuit Board	DM		(XW985B0)		
	VK863100	IC Socket	DICF-42CS-E				03
CN410	**V3835800**	Connector	TX24-80R-12ST-H1				04
CN510	**VB390800**	Connector Base Post	PH-12P TE				01
CN520	**VB390500**	Connector Base Post	PH- 9P TE				03
CN610	**VB390700**	Connector Base Post	PH-11P TE				01
CN710	**VB390100**	Connector Base Post	PH- 5P TE				01
CN720	**VB390600**	Connector Base Post	PH-10P TE				01
CN730	**VB390300**	Connector Base Post	PH- 7P TE				01
CN810	**VB390400**	Connector Base Post	PH- 8P TE				01
D301	**VV925900**	Diode	RLS-73 TE-11				01
D302	**VV925900**	Diode	RLS-73 TE-11				01
D701	**VV925900**	Diode	RLS-73 TE-11				01
IC101	**XU947C00**	IC	HG73C205AFD		SWX00B		09
IC210	**XU947C00**	IC	HG73C205AFD		SWX00B		09

***: New Parts** **RANK: Japan only**

REF NO.	PART NO.	DESCRIPTION			REMARKS	QTY	RANK
IC220	**XU462A00**	IC	MSM514260C-60TS-K		DRAM 4M		08
IC310	**XY388100**	IC			ROM 16M PROFRAM		
IC320	**XV411A00**	IC	W24258S-70LE-EL10		SRAM 256K		07
IC320	**XW433A00**	IC	CY62256LL-70SNCT		SRAM 256K		05
IC330	**XV411A00**	IC	W24258S-70LE-EL10		SRAM 256K		07
IC330	**XW433A00**	IC	CY62256LL-70SNCT		SRAM 256K		05
IC340	**XW105A00**	IC	MM74HC00SJX		NAND		
IC340	**XY120A00**	IC	TC74HCT00AF(EL)		NAND		
IC410	**XY393100**	IC	MX23C6410		ROM 64M WAVE1		
IC420	**XY394100**	IC	MX23C6410		ROM 64M WAVE2		
IC430	**XY395100**	IC	MX23C6410		ROM 64M WAVE3		
IC440	**XY396100**	IC	MX23C6410		ROM 64M WAVE4		
IC450	**XS048A00**	IC	HD74LVC139FPEL		DEMULTIPLEXER		03
IC510	**XY353A00**	IC	MM74HC138SJX		DE-MULTIPLEXER/DECODER		
IC520	**VT943400**	Transistor Array	TD62785F(TP1)				04
IC610	**XU829A00**	IC	PCM1716E		DAC		06
IC620	**XJ598A00**	IC	NJM78L05UA		REGULATOR +5V		02
IC710	**XY352A00**	IC	MM74HC132SJX		NAND		
IC720	**XS516A00**	IC	UPC2933T-E1		REGULATOR +3.3V		03
R710	**US063120**	Ceramic Capacitor-B(Chip)	1200P 50V K				01
TR501	**V5005800**	Digital Transistor	FMG11A T148				
-504	**V5005800**	Digital Transistor	FMG11A T148				
TR710	**VV556400**	Transistor	2SC2412K Q,R,S				01
TR720	**VJ927200**	Transistor	2SA1162 O,Y				01
X101	**VV335600**	Quartz Crystal Unit	33.8688M DSO751S				06
ZD301	**VU172000**	Zener Diode	UDZS5.6BTE-17 5.6V				01
	US044220	Ceramic Capacitor-B (Chip)	0.022 25V K		C: 609,610		01
	US061220	Ceramic Capacitor-CH (Chip	22P 50V J		C: 103		01
	US061270	Ceramic Capacitor-CH (Chip	27P 50V J		C: 109		01
	US062100	Ceramic Capacitor-SL (Chip	100P 50V J		C: 501-512,521-528,		01
					635-637,716-718,		
					723-726,802-805		
	US063100	Ceramic Capacitor-B (Chip)	1000P 50V K		C: 624		01
	US064100	Ceramic Capacitor-B (Chip)	0.01 50V K		C: 105,108,110,111,114,		01
					116-118,201,202,204,		
					206,207,231,301-303,		
					305,306,401-407,515,		
					516,620,631-634,702,		
					704,711-715,721,722,		
					736,801		
	US135100	Ceramic Capacitor-F (Chip)	0.1 16V Z		C: 101,102,601,604,607,623		01
	UF017470	Electrolytic Cap. (chip)	47 6.3V		C: 703		01
	UF037100	Electrolytic Cap. (chip)	10 16V		C: 107,112,113,115,203,		01
					205,208,603,606,611,		
					612,710		
	UF037220	Electrolytic Cap. (chip)	22 16V		C: 622		01
	UF037470	Electrolytic Cap. (chip)	47 16V		C: 626,735		01
	UF038100	Electrolytic Cap. (chip)	100 16V		C: 621		01
	UF046470	Electrolytic Cap. (chip)	4.7 25V		C: 602,605,608		01
	VI055000	Super Capacitor	0.1 F 5.5V FYD0H		C: 304		04
	RD354100	Carbon Resistor (chip)	10 63M J		R: 603		01
	RD354470	Carbon Resistor (chip)	47 63M J		R: 108-110,112-115,		01
					118-142,144-147,		
					202-229,231-240,		
					246,305,501,502		
	RD354680	Carbon Resistor (chip)	68 63M J		R: 160		01
	RD355100	Carbon Resistor (chip)	100 63M J		R: 111,242-245,301,		01
					503-508,801-804		
	RD355220	Carbon Resistor (chip)	220 63M J		R: 601,602,711		01
	RD356100	Carbon Resistor (chip)	1.0K 63M J		R: 101,102,302,303,704		01
	RD356150	Carbon Resistor (chip)	1.5K 63M J		R: 107		01
	RD356270	Carbon Resistor (chip)	2.7K 63M J		R: 706		01
	RD356820	Carbon Resistor (chip)	8.2K 63M J		R: 707		01
	RD357100	Carbon Resistor (chip)	10K 63M J		R: 103-105,148-154,703,705		01
	RD357220	Carbon Resistor (chip)	22K 63M J		R: 702,708		01
	RD357470	Carbon Resistor (chip)	47K 63M J		R: 116,117,143,155,156,		01
					161,201,230,241,304,306		
	RD358470	Carbon Resistor (chip)	470K 63M J		R: 106,701,709		01
	V4939000	Corcuit Board	D-JACK		(XW982C0)		

***: New Parts** **RANK: Japan only**

REF NO.	PART NO.	DESCRIPTION			REMARKS	QTY	RANK
	V4939100	Circuit Board	PEDAL				
CN1	**VB390600**	Connector Base Post	PH-10P TE				01
CN2	**VB390100**	Connector Base Post	PH- 5P TE				01
D1	**VV925900**	Diode	RLS-73 TE-11				01
-4	**VV925900**	Diode	RLS-73 TE-11				01
IC1	**XI348A00**	IC	SC7SU04FEL		INVERTER		01
IC2	**XU073A00**	IC	SN75C1168NSR		LINE TRANSCEIVER		05
IC3	**VD473200**	Photo Coupler	6N137				05
JK1	**VT202500**	DIN Connector	5P YKF51-50		IN		01
JK2	**VT202500**	DIN Connector	5P YKF51-50		OUT		01
JK3	**VT202500**	DIN Connector	5P YKF51-50		THRU		01
JK4	**VV269500**	DIN Connector	DIN 8P MD-S813		TO HOST		03
JK5	**V4874800**	DIN Connector	DIN 6P MD-S613		PEDAL		
L3	**VQ724900**	Chip Inductance	BK2125HM601-T				01
L4	**RD250000**	Carbon Resistor (chip)	0.0 0.0 J				01
L5	**VQ724900**	Chip Inductance	BK2125HM601-T				01
-19	**VQ724900**	Chip Inductance	BK2125HM601-T				01
SW1	**VQ665200**	Slide Switch	SSSF144-S06N-0		HOST SELECT		03
TR1	**VV556400**	Transistor	2SC2412K Q,R,S				01
-4	**VV556400**	Transistor	2SC2412K Q,R,S				01
	US064100	Ceramic Capacitor-B (Chip)	0.01 50V K		C: 2,8,10,11,13		01
	US135100	Ceramic Capacitor-F (Chip)	0.1 16V Z		C: 9		01
	UR837100	Electrolytic Cap.	10.00 16.0V		C: 5,12		01
	UN817470	Electrolytic Cap.-BP	47.00 6.3V		C: 6		01
	RD350000	Carbon Resistor (chip)	0 63M J		R: 6		01
	RD355100	Carbon Resistor (chip)	100 63M J		R: 7,8		01
	RD355220	Carbon Resistor (chip)	220 63M J		R: 14,15,24-28		01
	RD356100	Carbon Resistor (chip)	1.0K 63M J		R: 9,12		01
	RD356150	Carbon Resistor (chip)	1.5K 63M J		R: 20,23		01
	RD357100	Carbon Resistor (chip)	10K 63M J		R: 2-5,10,11,13,16,19,21, 29		01
	RD357220	Carbon Resistor (chip)	22K 63M J		R: 17,18,22		01
	VV649900	Circuit Board	FU120L J		J (XS882A0)		12
	--	Circuit Board	FU120L U		U (XS882A0)(VV65020)		
	--	Circuit Board	FU120L E		B,E (XS882A0)(VV65040)		
	--	Circuit Board	FU120L N		N (XS882A0)(VV65050)		
⚠	**VT308100**	AC Inlet	CCT9302-0101M		J,B,E,N		02
⚠	**VT308200**	AC Inlet	CCT9302-0201		U		02
	LB201530	Fuse Holder	PC-PH1				01
	VD041700	Jumper Wire	0.55				
	VT139600	Voltage Selector	M1684-E		N		04
CN1	**LB932030**	Base Post Connector	VH- 3P TE				01
CN2	**LB932060**	Base Post Connector	VH- 6P TE				01
⚠	**KB003630**	Fuse	TL 5.00A JU		J,U,N		01
⚠	**KB003080**	Fuse	T 2.50A S		B,E		01
⚠	**KB003080**	Fuse	T 2.50A S		N		01
⚠	**KB003080**	Fuse	T 2.50A S		N		01
J1	**VD041700**	Jumper Wire	0.55		J,U,B,E		
L1	**VY670400**	Coil	S-150-J0		J		07
L1	**VD041700**	Jumper Wire	0.55		U,N		
L1	**VV652500**	Coil	S-100-J0		B,E		07
L3	**VF790900**	Coil	SU10V-D20010				03
	VY675000	Capacitor	0.01 250V J.U.C.S		C: 1		01
	VY675100	Capacitor	4700P 250V J.U.C.S		C: 2,3		01
	VT089300	Circuit Board	HP		(XQ390A0)		09
	--	Earth Wire			(VT89070)		
	VD041700	Jumper Wire	0.55				
CN1	**VB858600**	Connector Base Post	PH- 7P SE				01
CN2	**VB858100**	Connector Base Post	PH- 2P SE				01
FL1	**VB971100**	Coil	FL5R200QN				01
-6	**VB971100**	Coil	FL5R200QN				01
HP1	**LB101870**	Phone Jack	YKB21-5006		PHONES 1		03
HP2	**LB101870**	Phone Jack	YKB21-5006		PHONES 2		03
	VE659000	Semiconductive Cera. Cap.	0.1 25V Z		C: 1-5		01
	VK992200	Carbon Resistor	68.0 1/2 J		R: 1-4		01
	V0047600	Circuit Board	HP (YI)		(XQ389A0)(XQ390A0)		
	--	Earth Wire			(VT89070)		

***: New Parts** **RANK: Japan only**

REF NO.	PART NO.	DESCRIPTION			REMARKS	QTY	RANK
	VD041700	Jumper Wire	0.55				
CN1	**VB858600**	Connector Base Post	PH- 7P SE				01
CN2	**VB858100**	Connector Base Post	PH- 2P SE				01
HP1	**LB101870**	Phone Jack	YKB21-5006		PHONES 1		03
HP2	**LB101870**	Phone Jack	YKB21-5006		PHONES 2		03
LB1	**VB971100**	Coil	FL5R200QN				01
-6	**VB971100**	Coil	FL5R200QN				01
	VE659000	Semiconductive Cera. Cap.	0.1 25V Z		C: 1-5		01
	VK992200	Carbon Resistor	68.0 1/2 J		R: 1-4		01
	VT143200	Circuit Board	MA120 J,U		J,U (XQ393E0)		20
	VT143300	Circuit Board	MA120 E,GBR,N		B,E,N (XQ393E0)		20
	VT443500	Support, PCB	T=8				03
	VT740000	Support, PCB	3T-9 T=9				03
	VP206500	Fuse Holder	EYF-52BC				01
	VJ834500	Insulation Sheet	#1000				03
	VD041700	Jumper Wire	0.55				
CN1	**LB932080**	Base Post Connector	VH- 8P TE				01
CN3	**LB918030**	Base Post Connector	XH 3P TE				01
CN4	**VB390300**	Connector Base Post	PH- 7P TE				01
CN5	**LB932040**	Base Post Connector	VH- 4P TE				01
CN6	**VB390500**	Connector Base Post	PH- 9P TE				03
D1	**VB481900**	Diode	11ES4				01
-5	**VB481900**	Diode	11ES4				01
DB1	**VK421800**	Diode Stack	D5SBA20 6.0A 200V				03
DB2	**VQ111500**	Diode Stack	D3SBA20-4103 4.0A				03
DB3	**VR253700**	Diode Stack	S1NB20 1.0A 200V				02
⚠ F1	**KB003630**	Fuse	TL 5.00A JU		J,U		01
⚠ F1	**KB003240**	Fuse	T 5.00A S		B,E,N		01
⚠ F2	**KB003630**	Fuse	TL 5.00A JU		J,U		01
⚠ F2	**KB003240**	Fuse	T 5.00A S		B,E,N		01
⚠ F3	**KB003630**	Fuse	TL 5.00A JU		J,U		01
⚠ F3	**KB003240**	Fuse	T 5.00A S		B,E,N		01
IC1	**XQ437A00**	IC	SI-3051N		REGULATOR +5V		03
IC2	**XQ667A00**	IC	M5237L		REGULATOR -5V		02
IC3	**XJ602A00**	IC	NJM78M12FA		REGULATOR +12V		02
IC4	**XD343A00**	IC	NJM79M12FA		REGULATOR -12V		03
IC5	**XQ374A00**	IC	STK401-090		POWER AMP.		09
RY1	**VK881200**	Relay	DC G5Z-2A-YA				04
TR1	**VJ828100**	Transistor	2SA1451A-O/Y O.Y				04
TR2	**IC1815M0**	Transistor	2SC1815 Y,GR				01
-4	**IC1815M0**	Transistor	2SC1815 Y,GR				01
	FG613100	Ceramic Capacitor-B	1000P 50V K		C: 12,22,27		01
	VA302600	Ceramic Capacitor-E	0.01 500V P		C: 1,2		01
	UR838100	Electrolytic Cap.	100.00 16.0V		C: 13,24,29,32		01
	UR866100	Electrolytic Cap.	1.00 50.0V		C: 9-11,16,18,19,23,28		01
	UR866330	Electrolytic Cap.	3.3 50.0V		C: 33		01
	V0069900	Electrolytic Cap.	4700 16.0V		} C:3,4		
	VU642700	Electrolytic Cap.	4700 16.0V		} C:3,4		03
	VL232200	Electrolytic Cap.	3300 50.0V		} C:5-8 J,U		04
	VY715200	Electrolytic Cap.	3300 50.0V		} C:5-8 B,E,N		04
	VL232300	Electrolytic Cap.	2200 25.0V		C: 14,15		03
	VY861100	Electrolytic Cap.	2200 25.0V		C: 14,15		03
	VY715600	Electrolytic Cap.	100.00 50.0V		C: 20,21		
	VT888400	Electrolytic Cap.	100 50.0V		C: 20,21		01
	VC694800	Semiconductive Cera. Cap.	0.1 25V Z		C: 17,25,26,30,31		01
	HF754560	Carbon Resistor	56.0 1/4 J		R: 5		01
	HF755220	Carbon Resistor	220.0 1/4 J		R: 4		01
	HF755390	Carbon Resistor	390.0 1/4 J		R: 12,18		01
	HF755560	Carbon Resistor	560.0 1/4 J		R: 10,16		01
	HF756100	Carbon Resistor	1.0K 1/4 J		R: 3		01
	HF756330	Carbon Resistor	3.3K 1/4 J		R: 7,22,23		01
	HF757100	Carbon Resistor	10.0K 1/4 J		R: 6,11,13,15,17,19,21		01
	VC742500	Metal Oxide Film Resistor	10.0 1W J		R: 14,20		01
	HW095100	Fuse Resistor	100.0 1/4 J		R: 8,9		01
	VU253100	Fuse Resistor	0.47 1/2 J		R: 1,2		01
	V2403300	Corcuit Board	NET1		(XT123B0)		
	VD041700	Jumper Wire	0.55				
CN001	**LB932040**	Base Post Connector	VH- 4P TE				01

***: New Parts** **RANK: Japan only**

REF NO.	PART NO.	DESCRIPTION			REMARKS	QTY	RANK
CN002	**LB932080**	Base Post Connector	VH- 8P TE				01
	VS677200	Electrolytic Cap.-BP	1.5 UF 63.0V		C: 0001,0002		01
	V2337300	Circuit Board	PEDAL		(XR780B0)		07
CN3	**VB390200**	Connector Base Post	PH- 6P TE				01
	VD041700	Jumper Wire	0.55				
	--	GND Wire	L=30		(VZ01760)		
	VN637600	Circuit Board	PL(YCJ)		(XL151B0)		03
CN1	**VB858100**	Connector Base Post	PH- 2P SE				01
LED1	**VD180000**	LED	SLZ-190B-03 RE				01
	VU659100	Circuit Board	PL(YMMA)		(XR898A0)		03
CN1	**VB858100**	Connector Base Post	PH- 2P SE				01
LED1	**VD180000**	LED	SLZ-190B-03 RE				01
	V5124000	Circuit Board	MV		(XW986C0)		
	V5123800	Circuit Board	PNL		(XW986C0)		
	V5123900	Circuit Board	PNR		(XW986C0)		
	VD041700	Jumper Wire	0.55				
CN101	**VB858700**	Connector Base Post	PH- 8P SE				01
CN201	**VB858800**	Connector Base Post	PH- 9P SE				01
CN202	**VC166500**	Connector Base Post	PH-12P SE				01
CN301	**VB858800**	Connector Base Post	PH- 9P SE				01
CN302	**VC166500**	Connector Base Post	PH-12P SE				01
D102	**VB941200**	Diode	1SS133,1SS176				01
-106	**VB941200**	Diode	1SS133,1SS176				01
D102	**VD631600**	Diode	1SS133,176,HSS104				01
-106	**VD631600**	Diode	1SS133,176,HSS104				01
D202	**VB941200**	Diode	1SS133,1SS176				01
-205	**VB941200**	Diode	1SS133,1SS176				01
D202	**VD631600**	Diode	1SS133,176,HSS104				01
-205	**VD631600**	Diode	1SS133,176,HSS104				01
D302	**VB941200**	Diode	1SS133,1SS176				01
-306	**VB941200**	Diode	1SS133,1SS176				01
D302	**VD631600**	Diode	1SS133,176,HSS104				01
-306	**VD631600**	Diode	1SS133,176,HSS104				01
D402	**VB941200**	Diode	1SS133,1SS176				01
-406	**VB941200**	Diode	1SS133,1SS176				01
D402	**VD631600**	Diode	1SS133,176,HSS104				01
-406	**VD631600**	Diode	1SS133,176,HSS104				01
D502	**VB941200**	Diode	1SS133,1SS176				01
-506	**VB941200**	Diode	1SS133,1SS176				01
D502	**VD631600**	Diode	1SS133,176,HSS104				01
-506	**VD631600**	Diode	1SS133,176,HSS104				01
D602	**VB941200**	Diode	1SS133,1SS176				01
-606	**VB941200**	Diode	1SS133,1SS176				01
D602	**VD631600**	Diode	1SS133,176,HSS104				01
-606	**VD631600**	Diode	1SS133,176,HSS104				01
L5	**VQ323900**	LED Display	SL-9351S				05
LD101	**VI813100**	LED	SLZ-181B-09-T6 RE		PRESET SONG		01
LD102	**VI813100**	LED	SLZ-181B-09-T6 RE		CHORUS		01
LD103	**VI813100**	LED	SLZ-181B-09-T6 RE		ROOM		01
LD104	**VI813100**	LED	SLZ-181B-09-T6 RE		HALL 1		01
LD105	**VI813100**	LED	SLZ-181B-09-T6 RE		HALL 2		01
LD106	**VI813100**	LED	SLZ-181B-09-T6 RE		STAGE		01
LD107	**VI813100**	LED	SLZ-181B-09-T6 RE		DEMO		01
LD108	**VI813100**	LED	SLZ-181B-09-T6 RE		CHURCH ORGAN		01
LD201	**VI813100**	LED	SLZ-181B-09-T6 RE		FUNCTION		01
LD202	**VI813100**	LED	SLZ-181B-09-T6 RE		TRANSPOSE		01
LD203	**VI813100**	LED	SLZ-181B-09-T6 RE		HARD		01
LD204	**VI813100**	LED	SLZ-181B-09-T6 RE		PHASER		01
LD205	**VI813100**	LED	SLZ-181B-09-T6 RE		TREMOLO		01
LD206	**VI813100**	LED	SLZ-181B-09-T6 RE		DELEY		01
LD207	**VI813100**	LED	SLZ-181B-09-T6 RE		GRAND PIANO2		01
LD208	**VI813100**	LED	SLZ-181B-09-T6 RE		JAZZ ORGAN		01
LD301	**VG197600**	LED	GL3ED8		TRACK 1		01
LD302	**VG197600**	LED	GL3ED8		TRACK 2		01
LD303	**VI813100**	LED	SLZ-181B-09-T6 RE		MIDIUM		01
LD304	**VI813100**	LED	SLZ-181B-09-T6 RE		SOFT		01

***: New Parts** **RANK: Japan only**

REF NO.	PART NO.	DESCRIPTION			REMARKS	QTY	RANK
LD305	VI813100	LED	SLZ-181B-09-T6 RE		VIBRAPHONE		01
LD306	VI813100	LED	SLZ-181B-09-T6 RE		E.PIANO1		01
LD307	VI813100	LED	SLZ-181B-09-T6 RE		STRINGS		01
LD308	VI813100	LED	SLZ-181B-09-T6 RE		E.BASS		01
LD404	VI813100	LED	SLZ-181B-09-T6 RE		SPLIT		01
LD405	VI813100	LED	SLZ-181B-09-T6 RE		HARPSICHORD		01
LD406	VI813100	LED	SLZ-181B-09-T6 RE		E.PIANO2		01
LD407	VI813100	LED	SLZ-181B-09-T6 RE		CHOIR		01
LD408	VI813100	LED	SLZ-181B-09-T6 RE		WOODBASS		01
R803	VD041700	Jumper Wire	0.55				
R804	VD041700	Jumper Wire	0.55				
SW102	VQ371700	Tact Switch	SKHVBL042A H=7		DEMO		01
SW103	VQ371700	Tact Switch	SKHVBL042A H=7		TRANSPOSE		01
SW104	VQ371700	Tact Switch	SKHVBL042A H=7		GRAND PIANO1		01
SW105	VQ371700	Tact Switch	SKHVBL042A H=7		CHURCH ORGAN		01
SW106	VQ371700	Tact Switch	SKHVBL042A H=7		SPLIT		01
SW202	VQ371700	Tact Switch	SKHVBL042A H=7		REVERB		01
SW203	VQ371700	Tact Switch	SKHVBL042A H=7		EFFECT		01
SW204	VQ371700	Tact Switch	SKHVBL042A H=7		GRAND PIANO2		01
SW205	VQ371700	Tact Switch	SKHVBL042A H=7		JAZZ ORGAN		01
SW302	VQ371700	Tact Switch	SKHVBL042A H=7		TOUCH		01
SW303	VQ371700	Tact Switch	SKHVBL042A H=7		VIBRAPHONE		01
SW304	VQ371700	Tact Switch	SKHVBL042A H=7		E.PIANO 1		01
SW305	VQ371700	Tact Switch	SKHVBL042A H=7		STRINGS		01
SW306	VQ371700	Tact Switch	SKHVBL042A H=7		E.BASS		01
SW402	VQ371700	Tact Switch	SKHVBL042A H=7		METRONOME START/STOP		01
SW403	VQ371700	Tact Switch	SKHVBL042A H=7		HARPSICHORD		01
SW404	VQ371700	Tact Switch	SKHVBL042A H=7		E.PIANO 2		01
SW405	VQ371700	Tact Switch	SKHVBL042A H=7		CHOIR		01
SW406	VQ371700	Tact Switch	SKHVBL042A H=7		WOOD BASS		01
SW502	VQ371700	Tact Switch	SKHVBL042A H=7		FUNCTION		01
SW503	VQ371700	Tact Switch	SKHVBL042A H=7		METRONOME FUNCTION DOWN		01
SW504	VQ371700	Tact Switch	SKHVBL042A H=7		METRONOME TEMPO UP		01
SW505	VQ371700	Tact Switch	SKHVBL042A H=7		PRESET SONG		01
SW506	VQ371700	Tact Switch	SKHVBL042A H=7		-/NO		01
SW602	VQ371700	Tact Switch	SKHVBL042A H=7		TRACK 2		01
SW603	VQ371700	Tact Switch	SKHVBL042A H=7		TRACK 1		01
SW604	VQ371700	Tact Switch	SKHVBL042A H=7		REC		01
SW605	VQ371700	Tact Switch	SKHVBL042A H=7		START/STOP		01
SW606	VQ371700	Tact Switch	SKHVBL042A H=7		+/YES		01
VR1	V4007500	Slide Variable Resistor	1B10K RS30112A9A02		MASTER VOLUME		03
VR2	V0042000	Slide Variable Resistor	B 10.0K RS30112C9		BRILLIANCE		03
W1	--	Earth Wire			(VT89070)		
	UA354220	Mylar Capacitor	0.022 50V J		C: 801-804		
	HF454470	Carbon Resistor	47.0 1/4 J				01
	HF754470	Carbon Resistor	47.0 1/4 J		R: 101,102,201,202,301,302, 501,502,601,602,701,702		01
	HF456820	Carbon Resistor	8.2K 1/4 J		R: 801,802		01
	HF756820	Carbon Resistor	8.2K 1/4 J		R: 801,802		01
⚠	VT015700	AC Cord Set	J 2P 2.5m 7A		J		05
⚠	V2916900	AC Cord Set	J 2P 7A 2.5m		J		05
⚠	V3126200	AC Cord Set	J 2P 2.5m 7A		J		
⚠	VT015800	AC Cord Set	U2P 2.44m 7A		U		06
⚠	V2917000	AC Cord Set	UC 2P 7A 2.44m		U		
⚠	V3126400	AC Cord Set	U 2P 2.5m		U		
⚠	VT016000	AC Cord Set	B 2P 2.5m		B		08
⚠	V3126500	AC Cord Set	B 2P 2.5m		B		
⚠	VT015900	AC Cord Set	E 2P 2.5m		E,N		05
⚠	V2917100	AC Cord Set	E 2P 2.5m 2.5A		E,N		05
⚠	V3126300	AC Cord Set	E 2P 2.5m		E,N		
⚠	VK726100	Connector	CCT5902		N		03
	V5771000	Headphone	P402522A0000		J		
⚠	XQ425A00	Power Transformer	29WP244 U		J		14
⚠	XQ426A00	Power Transformer	GA-120 E IEC65		U		13

***: New Parts** **RANK: Japan only**

	REF NO.	PART NO.	DESCRIPTION			REMARKS	QTY	RANK
⚠		**XQ427B00**	Power Transformer	GA-120 N		B,E		14
⚠		**XQ428B00**	Power Transformer			N		16
		XL455A00	Speaker	5.0cm 16ohm 60W				07
		V0044700	Connector Assembly	PK-LF				10
		VU456000	Rubber Contact	1 PEDAL				03
		XY775A00	Speaker	13.0cm 8 ohm 60W				
⚠		**VC8435400**	Push Switch	SDDLB1216A J,U,C,S				03
		VY693500	Rubber Contact	GH A88 2M				11

***: New Parts** **RANK: Japan only**

■ OVERALL CIRCUIT DIAGRAM

PNR

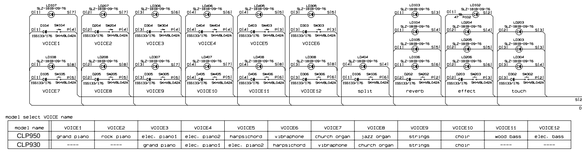

model name	VOICE1	VOICE2	VOICE3	VOICE4	VOICE5	VOICE6	VOICE7	VOICE8	VOICE9	VOICE10	VOICE11	VOICE12
CLP950	grand piano	rock piano	elec. piano1	elec. piano2	harpsichord	vibraphone	church organ	jazz organ	strings	choir	wood bass	elec. bass
CLP930	------	------	grand piano	elec. piano1	elec. piano2	harpsichord	vibraphone	church organ	strings	choir	------	------

28CC1-8815740

PNL

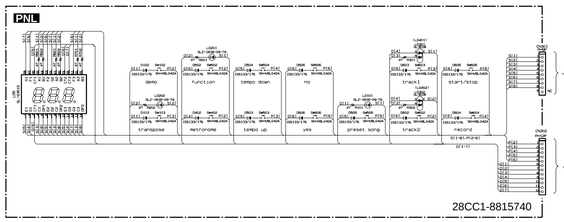

28CC1-8815740

KSN2

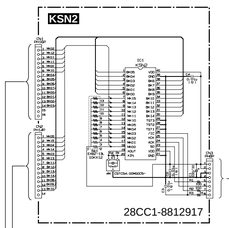

28CC1-8812917

AEXL88H

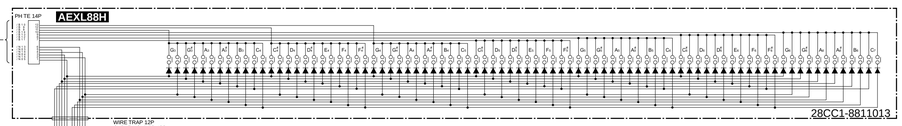

28CC1-8811013

AEXL88L

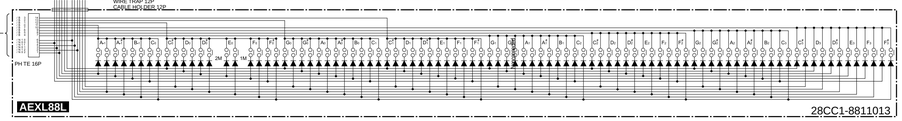

28CC1-8811013

DM

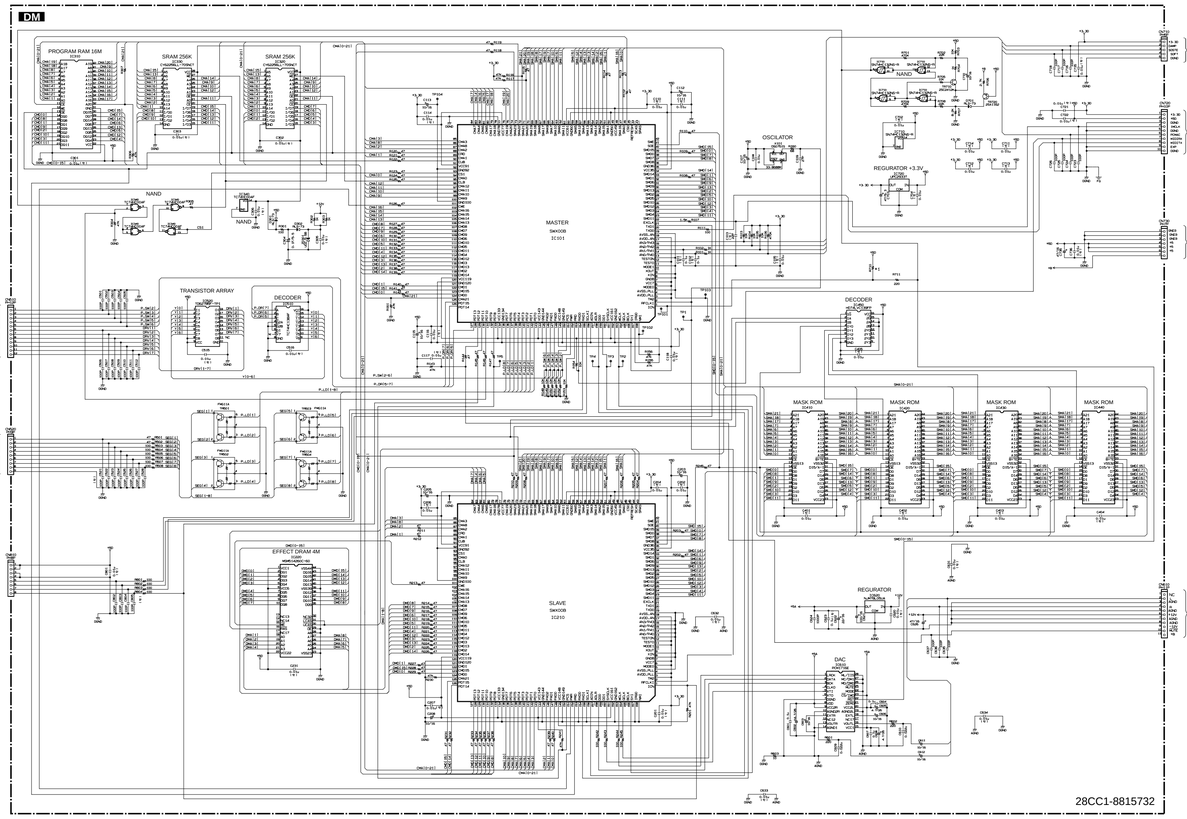

28CC1-8815732

DJACK 2/2

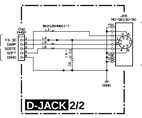

PEDAL

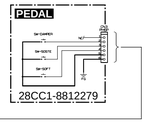

28CC1-8812279

DJACK 1/2

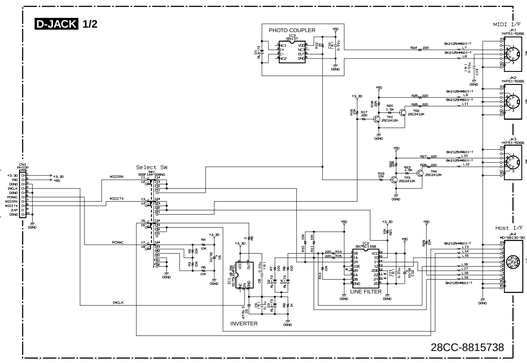

28CC-8815738

MV

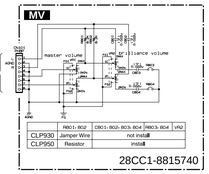

	RB01-802	CB01-802-103-104	RB03-804	VR2
CLP930	Jamper Wire	not install		
CLP950	Resistor	install		

28CC1-8815740

A-JACK

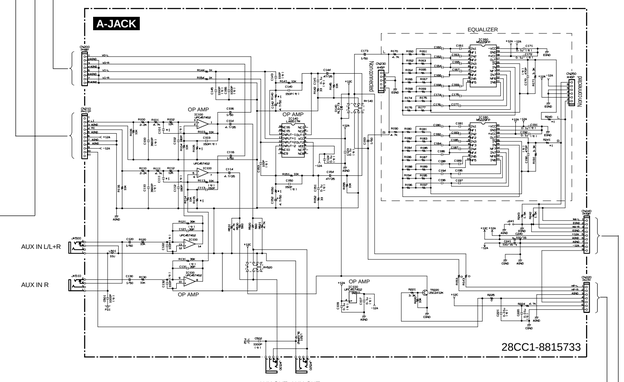

28CC1-8815733

FU120L

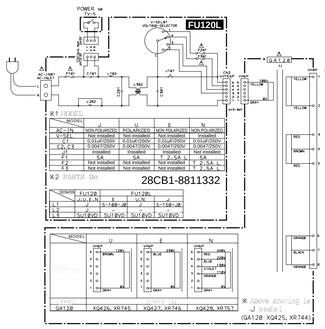

28CB1-8811332

MA120

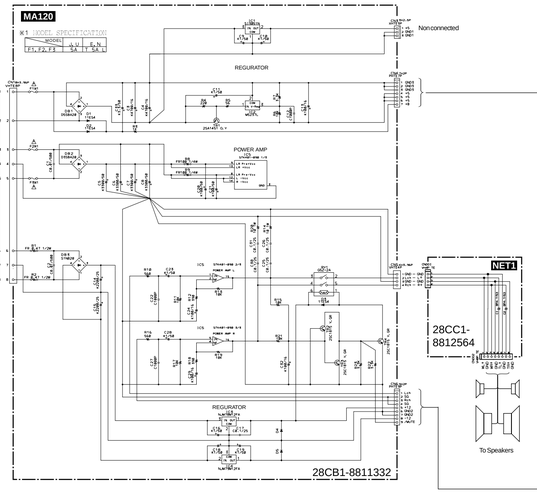

28CB1-8811332

NET-1

28CC1-8812564

RP

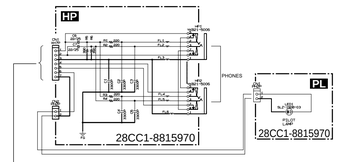

28CC1-8815970

PL

28CC1-8815970

●**MJM78L05UA**(XJ598A00) REGULATOR +5V



1:OUTPUT

●**μPC2933T** (XS516A00) REGULATOR +3.3V



1:V in
2:GND
3:V out

●**SI-305N** (XQ437A00) REGULATOR +5V



1: INPUT
2: GND
3: VOLTAGE adj

●**M5237L** (XQ667A00) REGULATOR +5V



1: INPUT
2: GND
3: VOLTAGE adj

●**NJM78M12FA**(XJ602A00) REGULATOR +12V



1 : OUTPUT
2 : COMMON
3 : INPUT

●**NJM79M12FA** (XD343A00) REGULATOR -12V



1: OUTPUT
2: INPUT
3: COMMON

●**11ES4** (VB481900) DIODE



1: ANODE
2:CATHODE

●**S1NB20** (VR253700) DIODE STACK



●**D5SBA20 6.0A** (VK421800)
D3SBA20-4103 4.0A
(VQ111500)
DIODE STACK



(セ)： Ceramic Capacitor

Note: See parts list for detailes of circuit board component parts.

■ WARNING

Components having special characteristics are maked ⚠ and must be replaced with parts having specification equal to those originally installed.