Clavinova®

CLP-760

SERVICE MANUAL



■ **CONTENTS** (目次)

SPECIFICATIONS (総合仕様)..... 2
PANEL LAYOUT (パネルレイアウト)..... 3
BLOCK DIAGRAM (ブロックダイアグラム)..... 4
CIRCUIT BOARD LAYOUT (ユニットレイアウト)..... 6
WIRING (結線図)..... 8
DISASSEMBLY PROCEDURE (分解手順)..... 10
LSI PIN DESCRIPTION (LSI端子機能表)..... 16
IC BLOCK DIAGRAM (ICブロック図)..... 19
CIRCUIT BOARDS (シート基板図)..... 22
MIDI DATA FORMAT..... 34
MIDI IMPLEMENTATION CHART..... 35
TEST PROGRAM (テストプログラム)..... 36
PARTS LIST

SK 001422

YAMAHA CORP.
HAMAMATSU, JAPAN
3.615K-425⊖Printed in Japan '90.9

IMPORTANT NOTICE

This manual has been provided for the use of authorized Yamaha Retailers and their service personnel. It has been assumed that basic service procedures inherent to the industry, and more specifically Yamaha Products, are already known and understood by the users, and have therefore not been restated.

WARNING: Failure to follow appropriate service and safety procedures when servicing this product may result in personal injury, destruction of expensive components and failure of the product to perform as specified. For these reasons, we advise all Yamaha product owners that all service required should be performed by an authorized Yamaha Retailer or the appointed service representative.

IMPORTANT: The presentation or sale of this manual to any individual or firm does not constitute authorization, certification, recognition of any applicable technical capabilities, or establish a principle-agent relationship of any form.

The data provided is believed to be accurate and applicable to the unit(s) indicated on the cover. The research, engineering, and service departments of Yamaha are continually striving to improve Yamaha products. Modifications are, therefore, inevitable and changes in specification are subject to change without notice or obligation to retrofit. Should any discrepancy appear to exist, please contact the distributor's Service Division.

WARNING: Static discharges can destroy expensive components. Discharge any static electricity your body may have accumulated by grounding yourself to the ground buss in the unit (heavy gauge black wires connect to this buss).

IMPORTANT: Turn the unit OFF during disassembly and parts replacement. Recheck all work before you apply power to the unit.

WARNING: CHEMICAL CONTENT NOTICE!

The solder used in the production of this product contains LEAD. In addition, other electrical/electronic and/or plastic (where applicable) components may also contain traces of chemicals found by the California Health and Welfare Agency (and possibly other entities) to cause cancer and/or birth defects or other reproductive harm.

DO NOT PLACE SOLDER, ELECTRICAL/ELECTRONIC OR PLASTIC COMPONENTS IN YOUR MOUTH FOR ANY REASON WHAT SO EVER!

Avoid prolonged, unprotected contact between solder and your skin! When soldering, do not inhale solder fumes or expose eyes to solder/flux vapor!.

If you come in contact with solder or components located inside the enclosure of this product, wash your hands before handling food.

■ SPECIFICATIONS

- **KEYBOARD** : 88 KEYS (A-1 ~ C7)
- **VOICE SELECTORS** : PIANO 1/2/3, CLAVINOVA TONE, E.PIANO 1, E.PIANO 2, HARPSICHORD, VIBES, STRINGS, ORGAN
- **REVERB** : Type: STEREO DELAY, ROOM, HALL Depth: MIN-MAX
- **TOUCH SENSITIVITY** : HARD, NORMAL, SOFT
- **EFFECT** : DETUNE, CHORUS, TREMOLO (with TREMOLO SPEED control)
- **PLAY MODES** : NORMAL, DUAL, SPLIT
- **PEDAL CONTROLS** : DAMPER, SOFT, SOSTENUTO
- **OTHER CONTROLS JACKS/CONNECTORS**: MASTER VOLUME, BRILLIANCE (MELLOW↔BRIGHT), MIDI/TRANSPOSE, HEADPHONES, AUX OUT L/MONO & R, OPTIONAL IN L/R, OPTIONAL OUT L/R, MIDI IN/OUT/THRU
- **INPUT & OUTPUT LEVEL/IMPEDANCE** : AUX OUT: 600-300 Ω/−7 dBm
  OPTIONAL OUT: 600 Ω/1 ~ 4 Vpp
  OPTIONAL IN: 22 kΩ/−10 dBm (for nominal output level)
- **MAIN AMPLIFIERS** : 50 W × 2 + 10 W × 2
- **SPEAKERS** : 16 cm × 2, 5 cm × 2, (6.5 × 13 cm) × 2
- **DIMENSIONS (W × D × H)** : 1390 × 487 × 807 mm
- **WEIGHT** : 64.0 kg (141.1 lbs.)
- **OUTPUT LEVEL** : HEADPHONES: +18 ± 3 dBm
  OPTIONAL OUT: +3 ± 3 dBm
  (When a sine wave of A3 sounds on the test program mode.
  See the test program on page 36.)

■ 総合仕様

- ●鍵盤 ：88鍵（A-1 — C7）
- ●音色 ：ピアノ1，ピアノ2，ピアノ3，クラビノーバトーン，エレクトリックピアノ1，エレクトリックピアノ2，ハープシコード，ビブラフォン，ストリングス，オルガン
- ●リバーブ ：ステレオディレイ，ルーム，ホール，デプスコントロール(MINI～MAX)
- ●タッチセンシティビティ ：ハード，ミディアム，ソフト
- ●エフェクト ：デチューン，コーラス，トレモロ トレモロスピードコントロール(スロー～ファースト)
- ●プレイモード ：ノーマル，デュアル，スプリット
- ●ペダルコントロール ：ダンパー，ソフト，ソステヌート
- ●その他のコントロール ：マスターボリューム，ブリリアンス(メロー～ブライト)，MIDI/トランスポーズ
- ●入出力端子 ：HEADPHONES，AUX OUT L/MONO・R，OPTIONAL IN L・R，OPTIONAL OUT L・R，MIDI IN・OUT・THRU
- ●入出力レベル ：AUX OUT 600−300Ω/−7dBm
  OPTIONAL OUT 600Ω/1～4Vp−p
  OPTIONAL IN 22kΩ/−10dBm(ノミナル出力レベル時)
- ●メインアンプ ：50W×2，10W×2
- ●スピーカー ：16cm×2，5cm×2，(6.5cm×13cm)×2
- ●寸法（W×D×H） ：1390mm×487mm×807mm
- ●重量 ：64.0kg
- ●出力レベル ：HEADPHONES +18±3dBm
  OPTIONAL OUT +3±3dBm
  (テストプログラムモードにて、A3サイン波発音時。テストプログラム参照)

■ PANEL LAYOUT（パネルレイアウト）

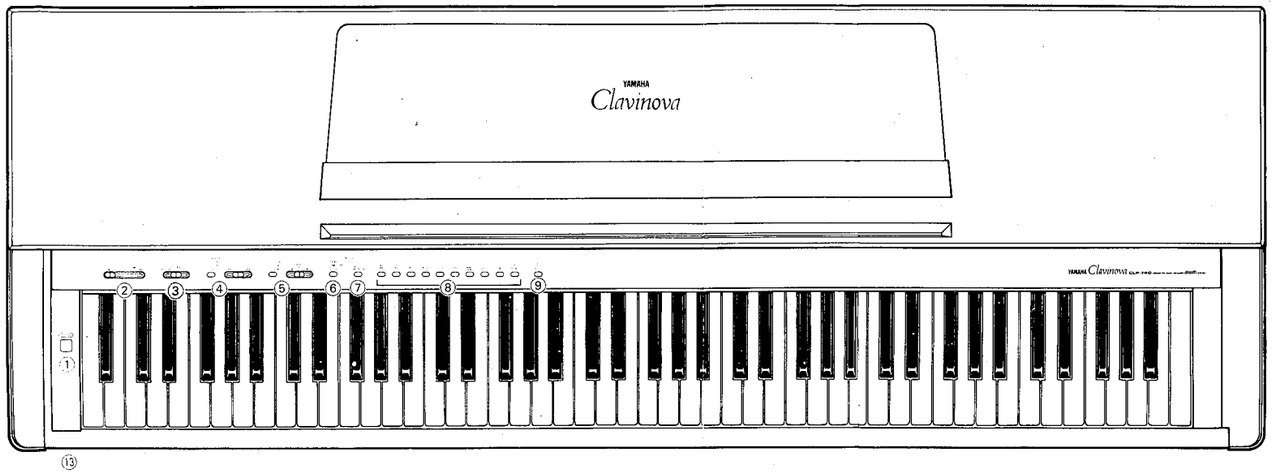

● Control Panel（コントロールパネル）



● Pedals（ペダル）

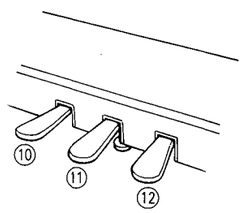

● Rear Panel（リアパネル）



① **[POWER] Switch**
② **[MASTER VOLUME] Control**
③ **[BRILLIANCE] Control**
④ **[REVERB] Button & [DEPTH] Control**
⑤ **[EFFECT] Button & [TREMOLO SPEED] Control**
⑥ **[TOUCH SENSITIVITY] Button**
⑦ **[MIDI/TRANSPOSE] Button**
⑧ **Voice Selectors**
⑨ **[SPLIT] Button**
⑩ **Soft Pedal**
⑪ **Sostenuto Pedal**
⑫ **Damper Pedal**
⑬ **HEADPHONE Jack (Button Panel)**
⑭ **OPTIONAL IN L·R and OUT L·R Jacks**
⑮ **AUX OUT L/L+R·R Jacks**
⑯ **MIDI IN, THRU and OUT Connectors**

CLP-760

■BLOCK DIAGRAM（ブロックダイアグラム）

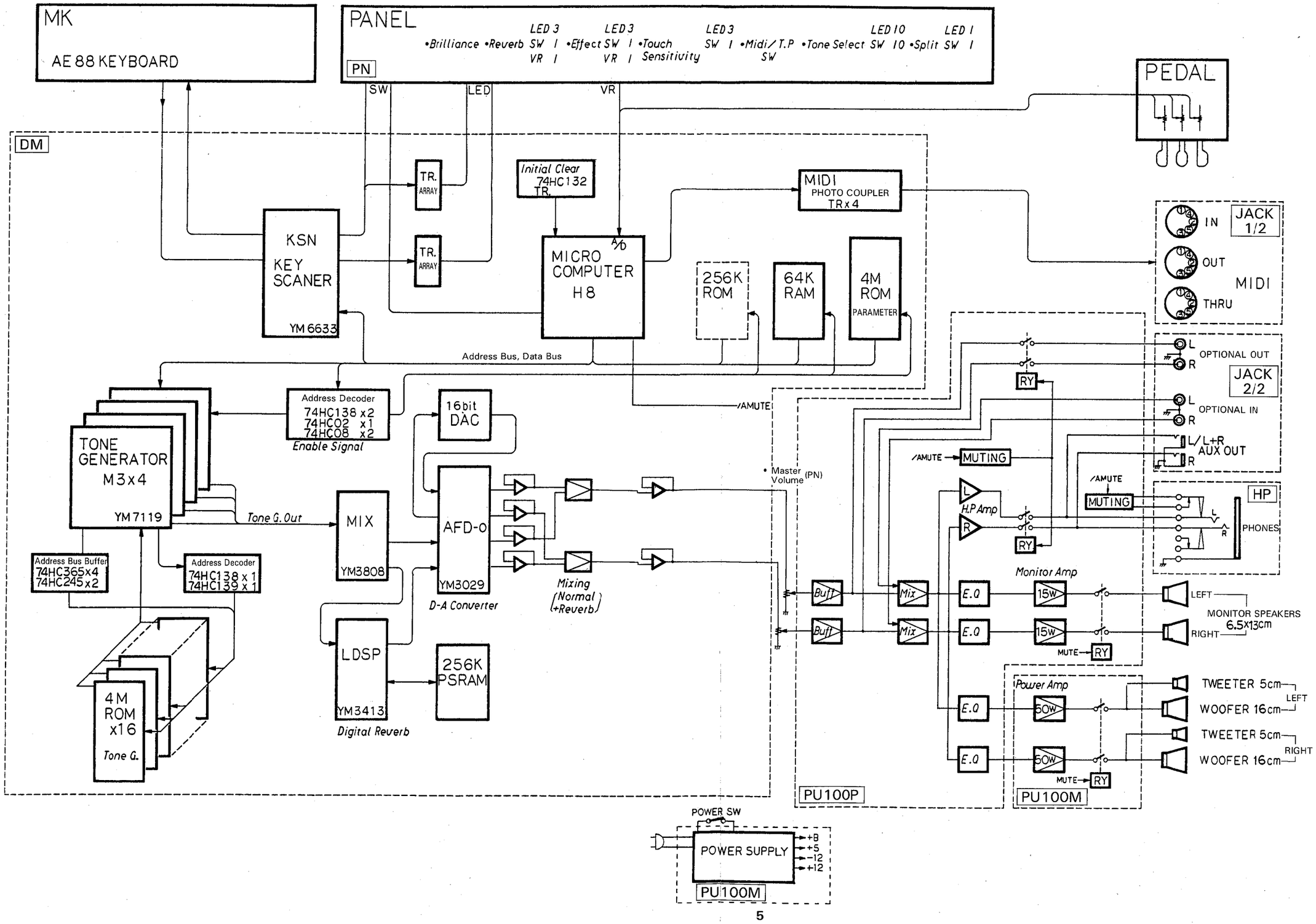

CLP-760

■CIRCUIT BOARD LAYOUT（ユニットレイアウト）

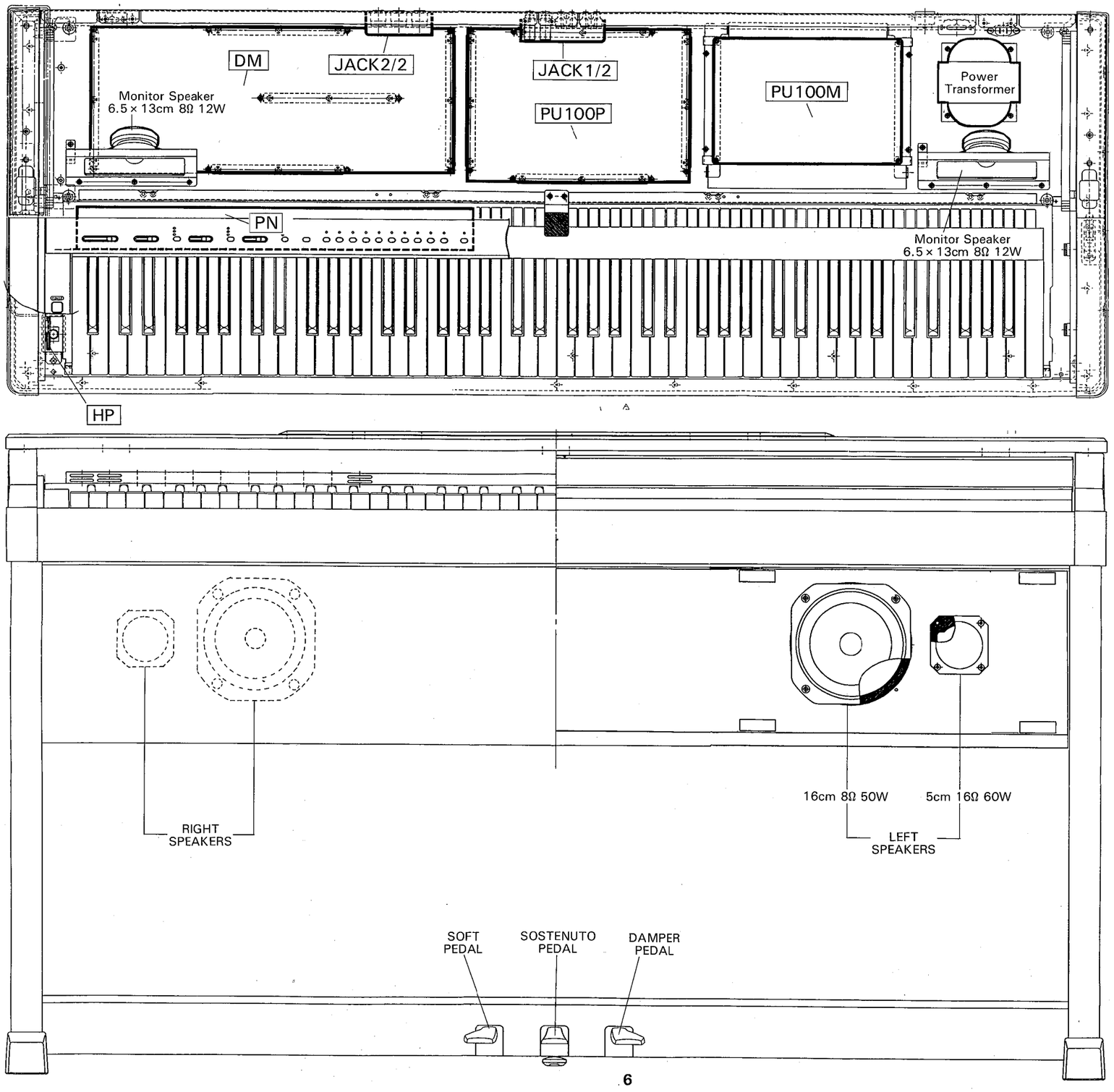

CLP-760

■WIRING（結線図）

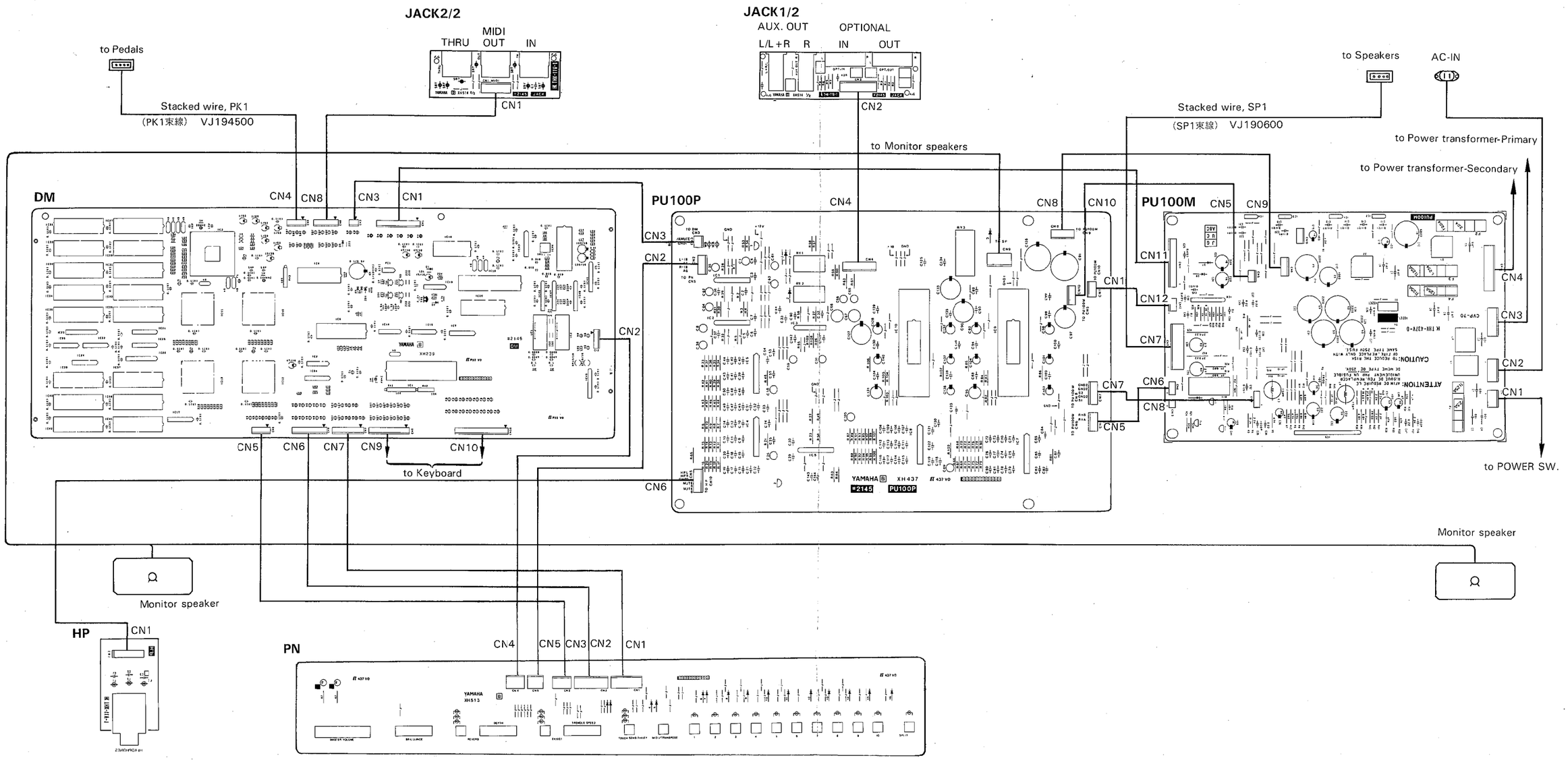

■ DISASSEMBLY PROCEDURE（分解手順）

1. Top Board

1-1 To open the Top board, loosen the two (2) retaining screws marked in the figure as Ⓐ. These screws are located under the Keybed. When these screws are loosened, they don't fall out. (Fig. 1)

1-2 Lift the Top board from the front and gently lean it against the wall — making sure that it can not fall.

1．屋根の開け方

1-1 Ⓐのネジ２本（段付ネジ）を緩め、屋根を矢印の方向に開けます。(Fig.1)

＊屋根を開ける場合は、開けすぎて蝶番を壊さないように壁などに当てがうようにして下さい。また、ネジⒶは、緩めても抜け落ちないようになっています。

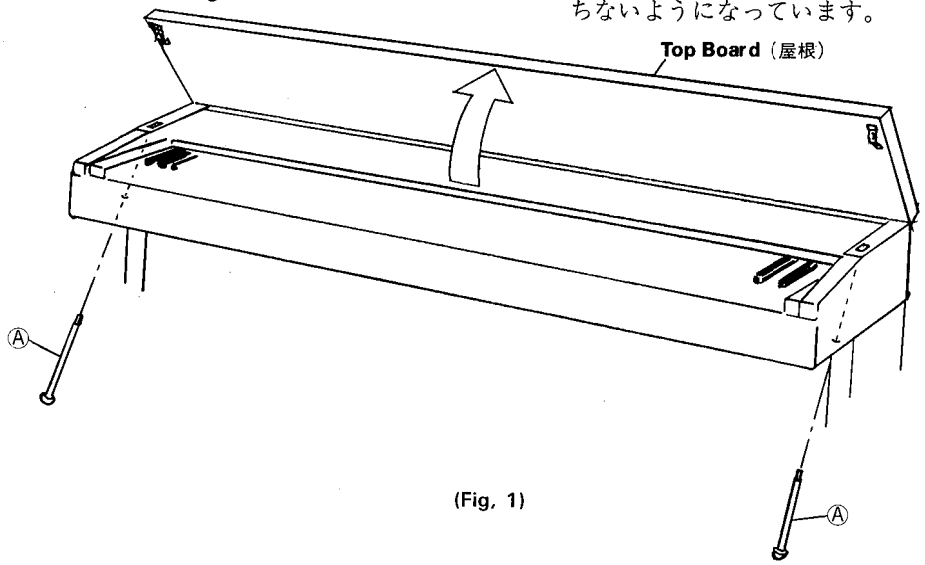

(Fig. 1)

2. Control Panel

2-1 Open the Top board. (see procedure 1 — Top Board)

2-2 Remove the two (2) screws marked Ⓑ (4.0 × 18 bind head screw) located under the keybed. (Fig. 2)

2-3 After the two (2) screws marked Ⓒ (3.0 × 8 bind head tapping screw) have been removed, the Control panel can be removed. (Fig. 2)

2．コントロールパネルの外し方

2-1 屋根を開けます。（１項参照）

2-2 棚板下のネジⒷ２本（4.0×18 バインド小ネジ）を外します。(Fig. 2)

2-3 Ⓒのネジ２本(3.0×8 バインドタッピングネジ）を外し、コントロールパネルを外します。(Fig. 2)

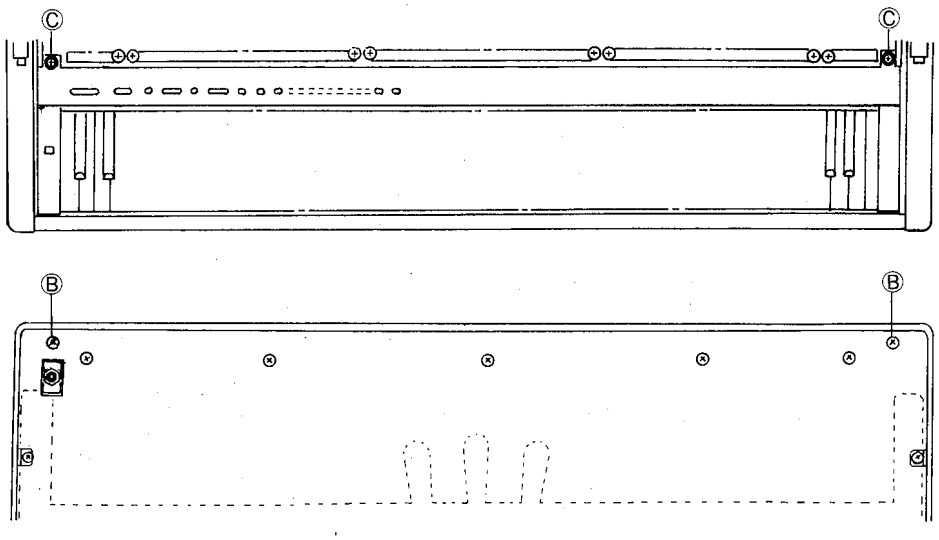

(Fig. 2)

3. DM Circuit Board
3-1 Open the Top board. (see procedure 1.)
3-2 To remove the left monitor speaker assembly, remove the two (2) screws marked Ⓓ (3.5 × 12 bind head tapping screw) and two (2) screws marked Ⓔ (4.0 × 14 bind head screw).
3-3 After the ten (10) screws marked Ⓕ (3.0 × 8 bind head screw) have been removed, the DM circuit board can be removed. (Fig. 3)

4. PU100P Circuit Board
4-1 Open the Top board. (see procedure 1)
4-2 Remove the four (4) screws marked Ⓖ (3.0 × 8 bind head screw), the PU100P circuit board can be raised. (Fig. 3)

5. PU100M Circuit Board Assembly
5-1 Open the Top board. (see procedure 1)
5-2 Remove the four (4) screws marked Ⓗ (4.0 × 14 bind head screw), the PU100M circuit board assembly can be removed. (Fig. 3)

6. JACK1/2 Circuit Board
6-1 Open the Top board. (see procedure 1)
6-2 The JACK1/2 circuit board can be removed by removing the two (2) screws marked Ⓘ (3.0 × 8 bind head screw). (Fig. 3)

7. JACK2/2 Circuit Board
7-1 Open the Top board. (see procedure 1)
7-2 The JACK2/2 circuit board can be removed by removing the three (3) screws marked Ⓙ (3.0 × 8 bind head tapping screw). (Fig. 3)

8. Power Transformer
8-1 Open the Top board. (see procedure 1)
8-2 After the four (4) screws marked Ⓚ (4.0 × 14 bind head screw) have been removed, the Power transformer can be removed. (Fig. 3)

3．DMシートの外し方
3-1 屋根を開けます。(1項参照)
3-2 Ⓓのネジ2本 (3.5×12 バインドタッピングネジ) とⒺのネジ2本 (4.0×14 バインド小ネジ) を外し、左のモニタースピーカーAss'yを外します。(Fig. 3)
3-3 Ⓕのネジ10本(3.0×8 バインド小ネジ)とコネクターを外し、DMシートを外します。(Fig. 3)

4．PU100Pシートの外し方
4-1 屋根を開けます。(1項参照)
4-2 Ⓖのネジ4本 (3.0×8 バインド小ネジ) とコネクターを外し、PU100Pシートを外します。(Fig. 3)

5．PU100MシートAss'yの外し方
5-1 屋根を開けます。(1項参照)
5-2 Ⓗのネジ4本(4.0×14 バインド小ネジ) とコネクターを外し、PU100MシートAss'yを外します。(Fig. 3)

6．JACK1/2シートの外し方
6-1 屋根を開けます。(1項参照)
6-2 Ⓘのネジ2本 (3.0×8 バインド小ネジ) とコネクターを外し、JACK1/2シートを外します。(Fig. 3)

7．JACK2/2シートの外し方
7-1 屋根を開けます。(1項参照)
7-2 Ⓙのネジ2本 (3.0×8 バインドタッピングネジ) とコネクターを外し、JACK2/2シートを外します。(Fig. 3)

8．電源トランスの外し方
8-1 屋根を開けます。(1項参照)
8-2 Ⓚのネジ4本(4.0×14 バインド小ネジ) を外し、電源トランスを外します。(Fig. 3)

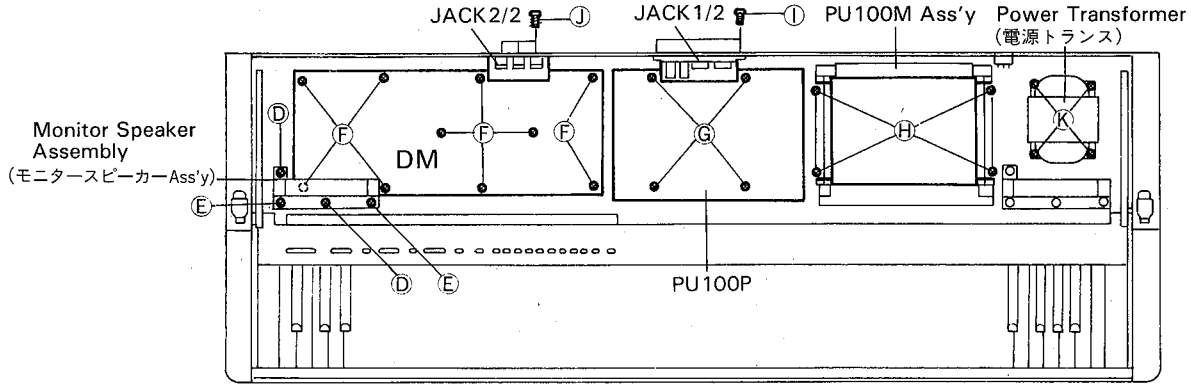

(Fig. 3)

9. PN Circuit Board

9-1 Open the Top board. (see procedure 1)
9-2 Remove the Control panel. (see procedure 2)
9-3 Pull out the four (4) slide knobs on the Control panel.
9-4 After the eleven (11) screws marked Ⓛ (3.0 × 6 bind head screw) have been removed, the PN circuit board can be removed. (Fig. 4)

10. Power Switch

10-1 Open the Top board. (see procedure 1)
10-2 Remove the Control panel. (see procedure 2)
10-3 The Power switch can be removed by removing the two (2) screws marked Ⓜ (3.0 × 8 bind head tapping screw). (Fig. 4)

9．PNシートの外し方

9-1 屋根を開けます。(1項参照)
9-2 コントロールパネルを外します。(2項参照)
9-3 スライドツマミ4ケを外します。
9-4 Ⓛのネジ11本 (3.0×6 バインド小ネジ) を外し、PNシートを外します。(Fig. 4)

10．パワースイッチの外し方

10-1 屋根を開けます。(1項参照)
10-2 コントロールパネルを外します。(2項参照)
10-3 Ⓜのネジ2本 (3.0×8 バインドタッピングネジ) を外し、パワースイッチを外します。(Fig. 4)

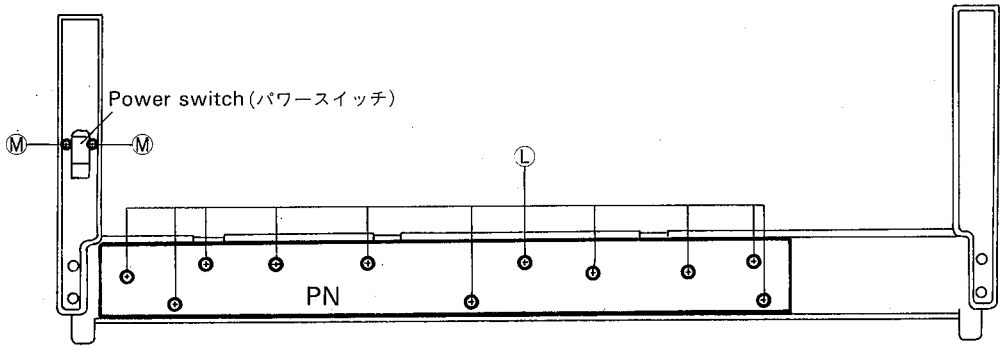

(Fig. 4)

11. HP Circuit Board

11-1 Open the Top board. (see procedure 1)
11-2 Remove the Control panel. (see procedure 2)
11-3 After the hexagonal nut marked Ⓝ has been removed, the HP circuit board can be removed. (Fig. 5)

11．HPシートの外し方

11-1 屋根を開けます。(1項参照)
11-2 コントロールパネルを外します。(2項参照)
11-3 Ⓝの六角ナットを外し、HPシートを外します。(Fig. 5)

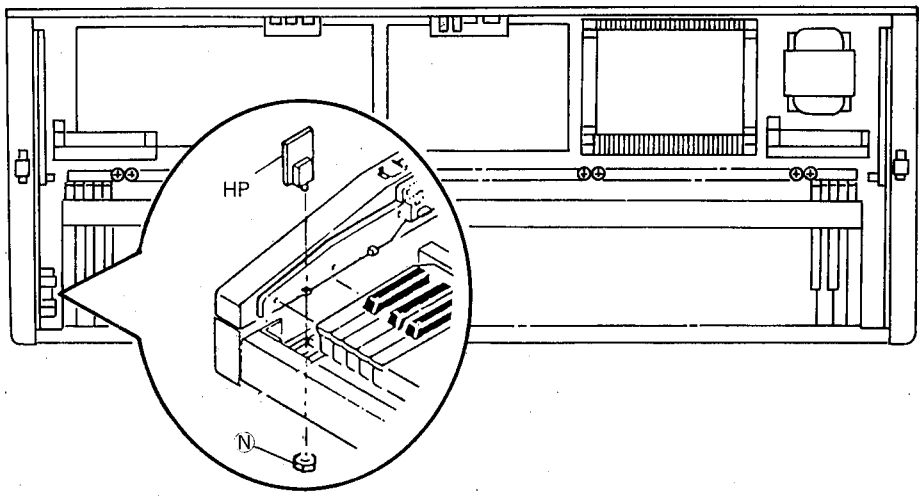

(Fig. 5)

12. Keyboard Assembly

12-1 Open the Top board. (see procedure 1)
12-2 Remove the Control panel. (see procedure 2)
12-3 Remove the five (5) screws marked Ⓞ (5.0 × 20 bind head screw) located under the keybed. (Fig. 6)
12-4 After the four (4) screws marked Ⓟ (4.0 × 14 bind head screw) and four (4) screws marked Ⓠ (3.5 × 12 bind head tapping screw) have been removed, the Keyboard assembly can be raised. (Fig. 7)
12-5 Remove the circuit board marked Ⓡ and key spring marked Ⓢ. (Fig. 8)
12-6 Remove the white key marked Ⓣ and hummer assembly marked Ⓤ. (Fig. 9)
12-7 The black key can be removed in same manner as these procedures.

12. 鍵盤Ass'yの外し方

12-1 屋根を開けます。(1項参照)
12-2 コントロールパネルを外します。(2項参照)
12-3 棚板下のネジⓄ5本(5.0×20 バインド小ネジ) を外します。(Fig. 6)
12-4 Ⓟのネジ4本(4.0×14 バインド小ネジ)とⓆのネジ4本(3.5×12 バインドタッピングネジ)を外し、鍵盤Ass'yを外します。(Fig. 7)
12-5 シート基板Ⓡを外し、鍵バネⓈを外します。(Fig. 8)
12-6 白鍵Ⓣを外し、ハンマーAss'yⓊを外します。(Fig. 9)
12-7 黒鍵も同様に、外すことが出来ます。

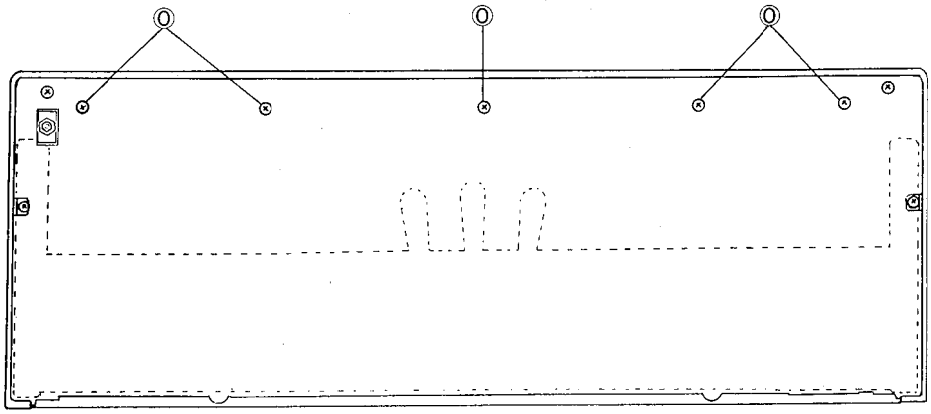

(Fig. 6)

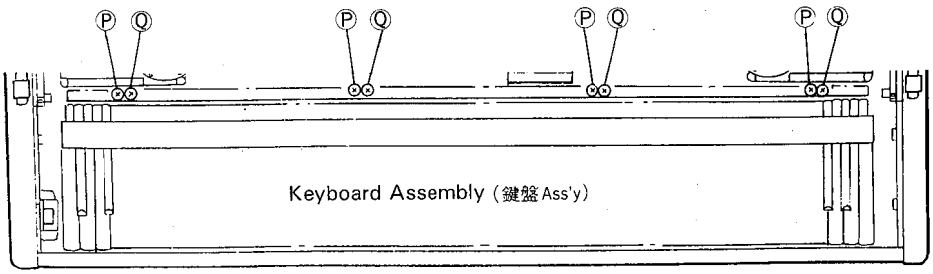

(Fig. 7)

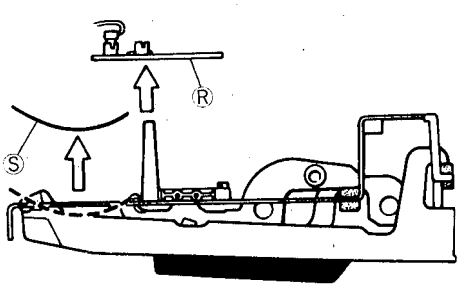

(Fig. 8)

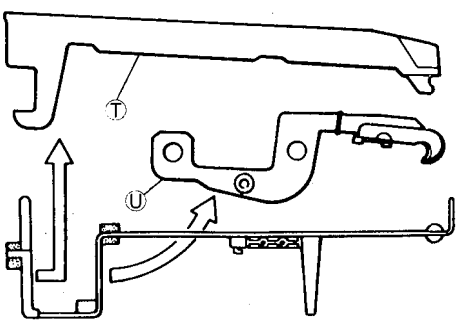

(Fig. 9)

13. CLP-760 Main Unit

13-1 Disconnect the AC cord and stacked wires SP2 and PK2. (Fig. 11)

13-2 Remove the four (4) screws marked Ⓥ (6.0 × 14 bind head screw), two (2) on the left and two (2) on the right side. After these screws have been removed, lift the unit up slightly and then slide it toward the back, then raise it. (Fig. 10)

14. Speaker Box Assembly

14-1 Remove the Main unit. (see procedure 13)

14-2 Remove the four (4) screws marked Ⓦ (6.0 × 20 bind head screw), lift the Speaker box assembly up. (Fig. 10)

13. CLP-760本体の外し方

13-1 電源コードとSP2束線とPK2束線を引き抜きます。(Fig. 11)

13-2 スタンドAss'yと本体を止めているⓋのネジ4本 (6.0×14 バインド小ネジ) を外し、本体を少し持ち上げながら後方にずらした後、持ち上げて外します。(Fig. 10)

14. スピーカーボックスAss'yの外し方

14-1 CLP760本体を外します。(13項参照)

14-2 Ⓦのネジ4本 (6.0×20 バインド小ネジ)を外し、持ち上げて外します。(Fig. 10)

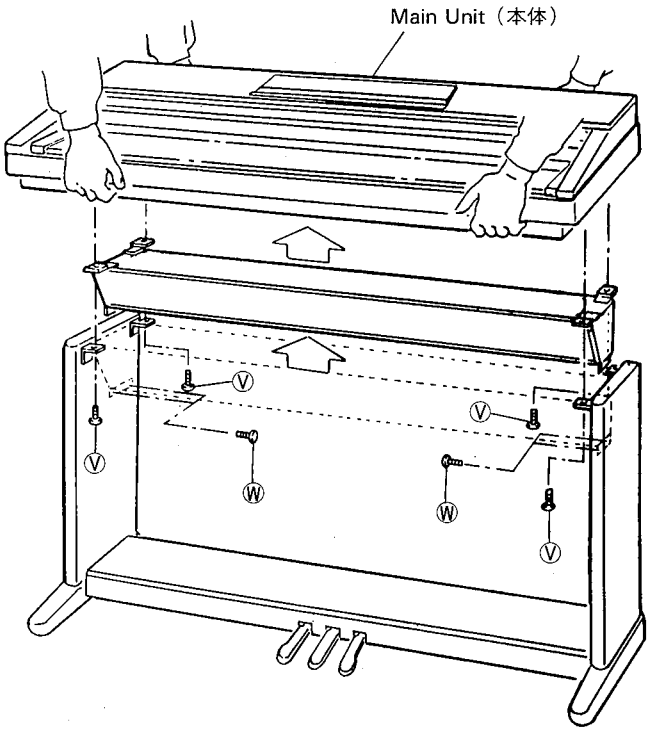

(Fig. 10)

Before removing the Main unit, you must disconnect three connectors as shwon below.

(メインユニットを外す時は，SP束線とPK束線とACコードを外して下さい。)

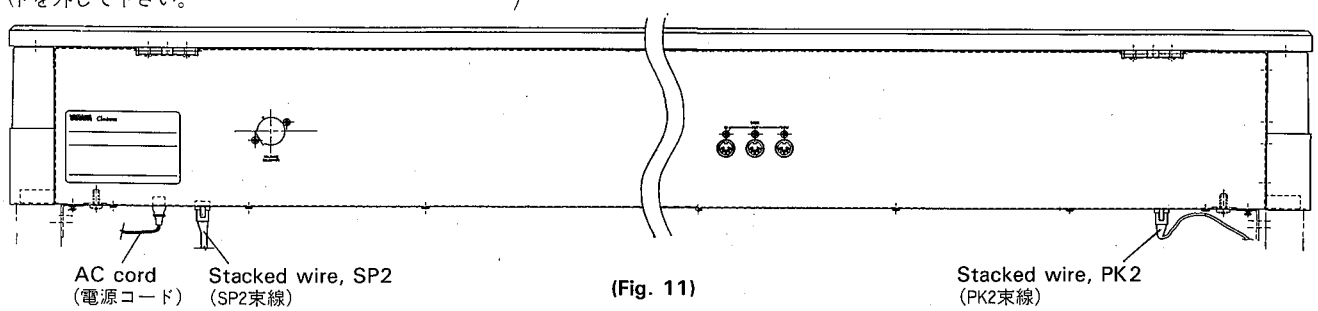

(Fig. 11)

15. Pedal assembly.

15-1 To make it easier to remove the Pedal assembly, place a soft blanket or similar material on the floor, gently place the rear of the unit on it.

15-2 The Pedal assembly can be removed by removing the five (5) screws marked Ⓧ (4.0 × 14 bind head tapping screw). (Fig. 12)

15. ペダルAss'yの外し方

15-1 床に毛布のような布を敷き、その上に背面が下になるように本体を静かに倒します。(作業には、充分注意して下さい。)

15-2 Ⓧのネジ5本(4.0×14 バインドタッピングネジ) を外し、ペダルAss'yを外します。(Fig. 12)

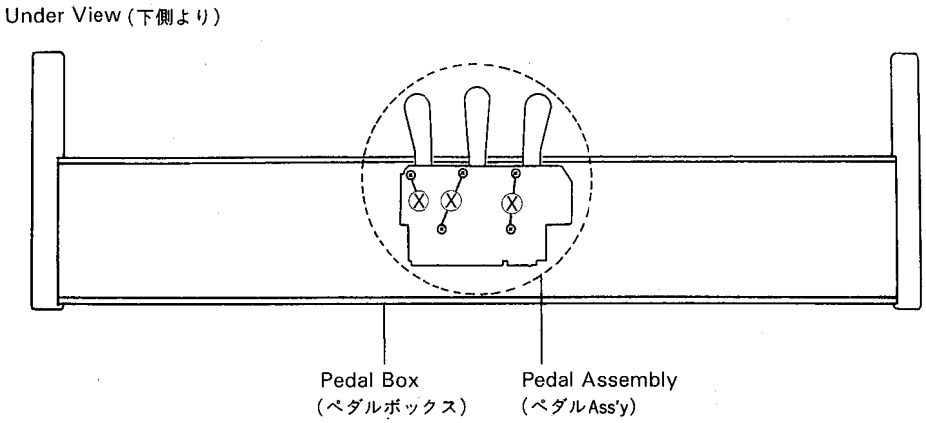

(Fig. 12)

16. Slide Cover Assembly

16-1 Open the Top board. (see procedure 1)

16-2 Displace the Slide cover assembly until the rod is set to the slit of the inner side cap so that it can be freely lifted up. (Fig.13)

16. スライド蓋Ass'yの外し方

16-1 屋根を開けます。(1項参照)

16-2 連動棒が、山板の抜き口にくるようにスライド蓋を手前に引き、持ち上げて外します。(Fig. 13)

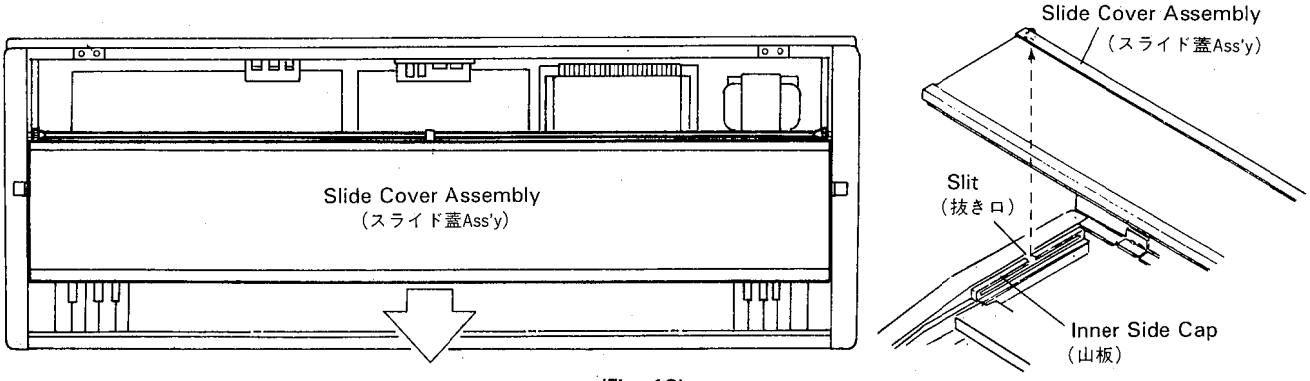

(Fig. 13)

* When you re-install the slide cover assembly, care must be taken to run it parallel to the keyboard.

※スライド蓋を取り付ける時は、鍵盤に対して平行になるように気をつけて、取り付けて下さい。

■LSI PIN DESCRIPTION (LSI端子機能表)

• HD6435328ZA17F <H8/532> (XH645A00) CPU (Central Processing Unit)

PIN NO.	NAME	I/O	FUNCTION	PIN NO.	NAME	I/O	FUNCTION
1	XTAL	I	Clock	43	P50/A8	O	Address bus
2	Vss	I	Ground	44	P51/A9	O	
3	P10/φ	O	System clock	45	P52/A10	O	
4	P11/E	O	Enable	46	P53/A11	O	
5	P12/$\overline{BACK}$	O	Bus acknowledge	47	P54/A12	O	
6	P13/$\overline{BREQ}$	I	Bus request	48	P55/A13	O	
7	P14/$\overline{WAIT}$	I	Wait	49	P56/A14	O	
8	P15/$\overline{IRQ0}$	I	Interrupt request 0	50	P57/A15	O	
9	P16/$\overline{IRQ1}$	I	Interrupt request 1	51	P60/A16	O	
10	P17/$\overline{TMO}$	O	8-bit timer output	52	P61/A17	O	
11	P20/$\overline{AS}$	O	Address strobe	53	P62/A18	O	
12	P21/R/$\overline{W}$	O	Read/Write	54	P63/A19	O	
13	P22/$\overline{DS}$	O	Data strobe	55	Vcc		Power supply
14	P23/$\overline{RD}$	O	Read control	56	P70/TMCI	I	8-bit timer clock input
15	P24/$\overline{WR}$	O	Write control	57	P71/FTI1	I	Free running timer input capture (8-bit timer counter reset input)
16	Vcc		Power supply	58	P72/FTI2	I	
17	MD0	I	Mode control	59	P73/FTI3/TMRI	I	
18	MD1	I		60	P74/FTOB1/FTCI1	O/I	Free running timer output compare B/ Free running timer counter clock
19	MD2	I		61	P75/FTOB2/FTCI2	O/I	
20	$\overline{STBY}$	I	Standby	62	P76/FTOB3/FTCI3	O/I	
21	$\overline{RES}$	I	Reset	63	P77/FTOA1	O	Free running timer output compare A1
22	NMI	I	Non-maskable interrupt	64	Vss		Ground
23	NC			65	AVss		Analog ground
24	Vss		Ground	66	P80/AN0	I	Port 8/Analog data input
25	P30/D0	I/O	Data bus	67	P81/AN1	I	
26	P31/D1	I/O		68	P82/AN2	I	
27	P32/D2	I/O		69	P83/AN3	I	
28	P33/D3	I/O		70	P84/AN4	I	
29	P34/D4	I/O		71	P85/AN5	I	
30	P35/D5	I/O		72	P86/AN6	I	
31	P36/D6	I/O		73	P87/AN7	I	
32	P37/D7	I/O		74	AVcc		Analog power supply
33	P40/A0	O	Address bus	75	P90/FTOA2	O	Free running timer output compare A2
34	P41/A1	O		76	P91/FTOA3	O	Free running timer output compare A3
35	P42/A2	O		77	P92/PW1	O	Pulse width
36	P43/A3	O		78	P93/PW2	O	
37	P44/A4	O		79	P94/PW3	O	
38	P45/A5	O		80	P95/TXD	O	Transmit data
39	P46/A6	O		81	P96/RXD	I	Receive data
40	P47/A7	O		82	P97/SCK	I/O	Serial clock
41	Vss		Ground	83	Vss		Ground
42	Vss			84	EXTAL	I	Clock

• YM6633 (XH543A00) KSN (Key Scanner)

PIN NO.	NAME	I/O	FUNCTION	PIN NO.	NAME	I/O	FUNCTION
1	XIN	I	Clock	33	DB0	I/O	Data bus
2	XOUT	O		34	DB1	I/O	
3	MK15	I	Keyboard 2nd make contact	35	DB2	I/O	
4	MK14	I		36	DB3	I/O	
5	MK13	I		37	DB4	I/O	
6	MK12	I		38	DB5	I/O	
7	MK11	I		39	DB6	I/O	
8	MK10	I		40	DB7	I/O	
9	MK05	I	Keyboard 1st make contact	41	AD0	I	Address bus
10	MK04	I		42	AD1	I	
11	MK03	I		43	AD2	I	
12	MK02	I		44	$\overline{CS}$	I	Chip select
13	MK01	I		45	$\overline{WR}$	I	Write control
14	MK00	I		46	$\overline{RD}$	I	Read control
15	BK0	O	Keyboard block	47	PA0	O	Port A
16	BK1	O		48	PA1	O	
17	BK2	O		49	PA2	O	
18	BK3	O		50	PA3	O	
19	BK4	O		51	PA4	O	
20	BK5	O		52	PA5	O	
21	BK6	O		53	PA6	O	
22	BK7	O		54	PA7	O	
23	Vss		Ground	55	TP	I	Test pin
24	BK8	O	Keyboard block	56	PB0	O	Port B
25	BK9	O		57	PB1	O	
26	BK10	O		58	PB2	O	
27	BK11	O		59	PB3	O	
28	BK12	O		60	PB4	O	
29	BK13	O		61	PB5	O	
30	BK14	O		62	XCLK	O	Clock for CDO
31	$\overline{IC}$	I	Initial clear	63	CDO	O	Control data
32	Vss		Ground	64	VDD		Power supply

• **YM3029** (XF237A00) AFD0 (Floating Point Converter)

PIN NO.	NAME	I/O	FUNCTION	PIN NO.	NAME	I/O	FUNCTION
1	DVDD		Digital power supply (+5V)	15	SHA	I	Sample and hold input (Channel A)
2	LE	O	Latch enable	16	EXG		} Exponent ground
3	DAB	O	Channel A/B data output	17	EXG		
4	SYW	I	Sync pulse	18	EXI	I	Exponent input
5	CLK	I	Clock	19	EXO	O	Exponent output
6	ϕ1	O	Clock for DAC	20	AVSS		Analog power supply (−5V)
7	DGND		Digital ground	21	AVDD		Analog power supply (+5V)
8	AVDD		Analog power supply (+5V)	22	SI1	I	Serial data input 1 (Channel A)
9	AVSS		Analog power supply (−5V)	23	VLA0	I	} Volume level select (Channel A)
10	SHB	I	Sample and hold input (Channel B)	24	VLA1	I	
11	CH4	O	Output (Channel 4)	25	SI2	I	Serial data input 2 (Channel B)
12	CH3	O	Output (Channel 3)	26	VLB0	I	} Volume level select (Channel B)
13	CH2	O	Output (Channel 2)	27	VLB1	I	
14	CH1	O	Output (Channel 1)	28	4/2	I	Channel number select (4 or 2-channel)

• **YM3413** (XE449A00) LDSP (Digital Signal Processor)

PIN NO.	NAME	I/O	FUNCTION	PIN NO.	NAME	I/O	FUNCTION
1	VDD		DC supply	21	A5	O	} Address bus
2	D7	I/O	} Data bus	22	A6	O	
3	D6	I/O		23	A7	O	
4	D5	I/O		24	A8	O	
5	D4	I/O		25	A9	O	
6	D3	I/O		26	A10	O	
7	D2	I/O		27	A11	O	
8	D1	I/O		28	A12	O	
9	D0	I/O		29	A13	O	
10	SI0	I	} Serial data input	30	A14	O	
11	SI1	I		31	A15	O	
12	SYW	I	Synch pulse	32	A16	O	
13	$\overline{WE}$	O	Write enable	33	SO0	O	Serial data output
14	$\overline{OE}$	O	Output enable	34	XCLK		Clock
15	A0	O	} Address bus	35	$\overline{IC}$	I	Initial Clear
16	A1	O		36	$\overline{CRS}$	I	CD counter reset
17	A2	O		37	CDI	I	CD input
18	A3	O		38	CDo	O	CD output
19	A4	O		39	SO1	O	Serial data output
20	Vss		Ground	40	CLK		Clock

• **YM3808** (XA798001) Digital Mixer

Pin No.	Name	I/O	Function	Pin No.	Name	I/O	Function
1	Vdd		Power supply +5V	24	CLK	I	3.2MHz
2	MXI_1	I	} Input from tone generators	23	XCLK	I	500K-3.2MHz CD reception
3	MXI_2	I		22	SYW	I	Synchronization signal to determine starting point of DAC cycle.
4	MXI_3	I		21	MXC_1	I	} Cascade input
5	MXI_4	I		20	MXC_2	I	
6	MXI_5	I		19	NC		
7	MXI_6	I		18	$\overline{TST}$	I	Test pin (V_{DD})
8	MXI_7	I		17	MXO1	O	} Output
9	MXI_8	I		16	MXO2	O	
10	CDI	I	CD input	15	NC		
11	$\overline{CRS}$	I	CD counter reset	14	NC		
12	V_{SS}			13	CDO	O	CD output

• YM7119 (XG995A00) M3 (AWM Tone generator & Digital Filter)

PIN NO.	NAME	I/O	FUNCTION	PIN NO.	NAME	I/O	FUNCTION
1	INDV0	O	Individual output 0 (8 channels)	65	WA8	O	Wave memory address bus
2	INDV1	O	Individual output 1 (8 channels)	66	WA9	O	
3	OPZ	I	MELIN input select (Ⓗ OPZ, Ⓛ PAN)	67	WA10	O	
4	DIOUT0	O	Stereo output (L & R)	68	WA11	O	
5	DIOUT1	O	Assignable output (ch.0 & ch.4)	69	WA12	O	
6	DIOUT2	O	Assignable output (ch.1 & ch.5)	70	WA13	O	
7	DIOUT3	O	Assignable output (ch.2 & ch.6)	71	WA14	O	
8	DIOUT4	O	Assignable output (ch.3 & ch.7)	72	NC		
9	MELIN	I	MEL formatted signal input	73	WA15	O	
10	LSB/MSB	I	Individual output mode select	74	WA16	O	
11	TTPAD0	I/O	(Ⓗ MSB first, Ⓛ LSB first)	75	WA17	O	
12	TTPAD1	I/O		76	WA18	O	
13	NC			77	WA19	O	
14	TTPAD2	I/O		78	WA20	O	
15	TTPAD3	I/O		79	WA21	O	
16	TTPAD4	I/O		80	WA22	O	
17	TTPAD5	I/O		81	WA23	O	
18	NC		Test pin	82	A0	I	CPU address bus
19	TTPAD6	I/O		83	A1	I	
20	TTPAD7	I/O		84	A2	I	
21	NC			85	A3	I	
22	TTPAD8	I/O		86	A4	I	
23	TTPAD9	I/O		87	A5	I	
24	NC			88	D0	I/O	CPU data bus
25	TTPAD10	I/O		89	NC		
26	TTPAD11	I/O		90	D1	I/O	
27	DIIN0	I	Individual input 0 (8 channels)	91	D2	I/O	
28	DIIN1	I	Individual input 1 (8 channels)	92	D3	I/O	
29	WD0	I/O		93	D4	I/O	
30	WD1	I/O		94	D5	I/O	
31	WD2	I/O		95	D6	I/O	
32	WD3	I/O		96	D7	I/O	
33	NC			97	S/HSC0	I	Sample and hold set timing 0~3
34	WD4	I/O		98	S/HSC1	I	
35	WD5	I/O		99	S/HSC2	I	
36	WD6	I/O		100	S/HSC3	I	
37	WD7	I/O		101	S/HEN	O	Sample and hold enable
38	WD8	I/O	Wave memory data	102	S/H0	O	Sample and hold 0~3
39	WD9	I/O		103	S/H1	O	
40	NC			104	S/H2	O	
41	NC			105	S/HRCA	I	Sample and hold reset A and B
42	WD10	I/O		106	S/HRCB	I	
43	WD11	I/O		107	$\overline{IC}$	I	Initial clear
44	NC			108	Vss		Ground
45	WD12	I/O		109	XTAL	O	Clock
46	WD13	I/O		110	EXTAL	I	
47	WD14	I/O		111	NC		
48	Vss		Ground	112	FCLKOUT	O	Sync. signal on 2 chips mode
49	VDD		Power supply	113	FCLKIN	I	
50	WD15	I/O		114	NC		
51	$\overline{MSBW}$	O	Wave data MSB write signal	115	CLK3	O	6.144MHz clock
52	$\overline{LSBW}$	O	Wave data LSB write signal	116	VDD		Power supply
53	$\overline{OE}$	O	Output enable for wave data	117	SYWIN	I	Sync. signal for MEL format
54	ODD/EVEN	I	Odd/Even select on 2 chips mode	118	CLKMEL	O	3.072MHz clock for MEL format
55	SINGLE/DUAL	I	Wave memory single/dual mode	119	NC		
56	WA0	O	select (Ⓗ : dual-2 chips mode,	120	DACLE	O	Latch enable for PCM56 (DAC)
57	WA1	O	Ⓛ : single-1 chip mode)	121	SYWOUT	O	Sync pulse for MEL format
58	WA2	O		122	SYW64	O	6.144MHz sync. signal
59	WA3	O		123	$\overline{IRQ}$	O	Interrupt request (open drain)
60	WA4	O	Wave memory address bus	124	$\overline{CS}$	I	Chip select
61	WA5	O		125	R/$\overline{W}$	I	Read/Write control
62	WA6	O		126	CHPIN	I	EG lowest ch. detect
63	WA7	O		127	CHPOUT	O	EG lowest ch. detect
64	NC			128	KSYNC	I	Key on sync. signal from AFM

■IC BLOCK DIAGRAM (ICブロック図)

- **SN74HC02N** (IR000250)
  Quad 2 Input NOR

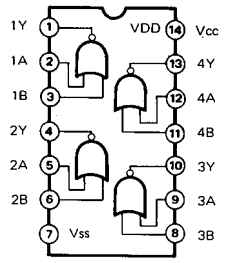

- **SN74HC08N** (IR000850)
  Quad 2 Inputt AND

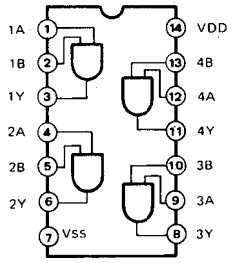

- **SN74HC138N** (IR013850)
  3 to 8 Demultiplexer

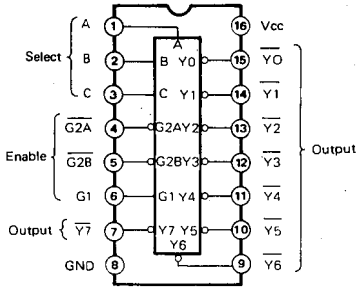

- **SN74HC139N** (IR013950)
  Dual 2 to 4 Demultiplexer

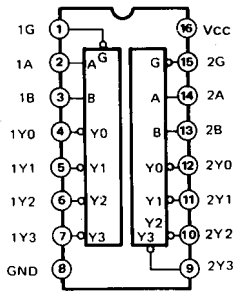

- **SN74HC245N** (IR024550)
  Octal 3-State Bus Transceiver

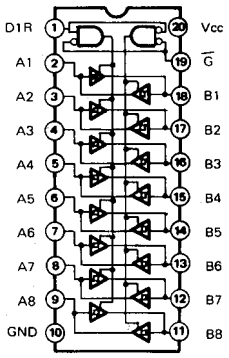

- **SN74HC365N** (IR036550)
  Hex 3-State Bus Buffer

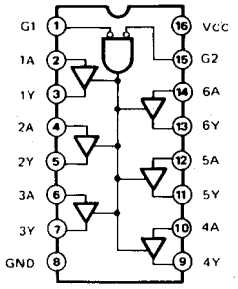

- **SN74HC132N** (IR013250)
  Quad 2 Input NAND

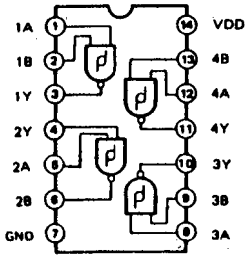

- **NJM072S** (XA778001)
- **μPC4570HA** (XB247001)
  Dual Operational Amplifier

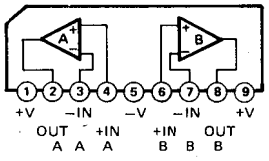

- **M5216L** (XB419001)
  Dual Operational Amplifier

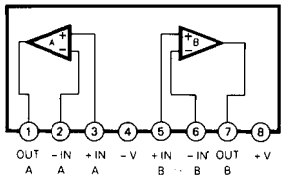

- **M5229P** (XG203A00)
  7 Band Graphic Equalizer

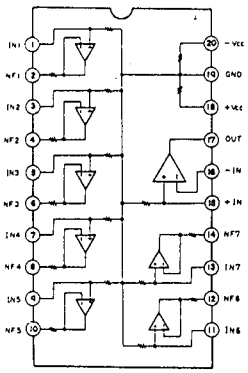

- **AD1856** (XF371A00)
  Digital Analog Converter

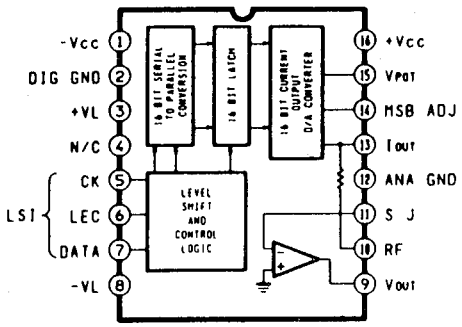

MIDI DATA FORMAT

1. NOTE ON/OFF

Data format: [9xH] -> [kk] -> [vv]

9xH = Note ON/OFF event (x = channel number)
kk = Note number (21 ~ 108 = A-1 ~ C7)
vv = Velocity (Key ON = 1 ~ 127. Key OFF = 0)

** Note OFF event format [8xH] -> [kk] also recognized (reception only).*

2. CONTROL CHANGE & MODE MESSAGES

Data format: [BxH] -> [cc] -> [dd]

BxH = Control event (x = channel number)
cc = Control number (or mode message number)
dd = Control value

cc	PARAMETER	dd
07H	Volume	0 ~ 7FH
0BH	Expression	0 ~ 7FH
40H	Damper pedal	0 ~ 0FH = OFF; 10H ~ 1FH = 1; 20H ~ 2FH = 2; 30H ~ 3FH = 3; 40H ~ 4FH = 4; 50H ~ 5FH = 5; 60H ~ 6FH = 6; 70H ~ 7FH = 7
42H	Sostenuto pedal	0 ~ 3FH = OFF; 40H ~ 7FH = ON
43H	Soft pedal	0 ~ 7FH, eight levels
7AH	Local ON/OFF	0 = OFF; 7FH = ON
7BH	All notes OFF	0
7CH	OMNI OFF/All notes OFF	0
7DH	OMNI ON/All notes OFF	0

** 07H, 0BH, 7AH, 7BH, 7CH and 7DH are receive only.*

3. PROGRAM CHANGE

Data format: [CxH] -> [dd]

CxH = program event (x = channel number)
dd = Program number

dd	VOICE
00H	PIANO 1
01H	PIANO 2
02H	PIANO 3
03H	CLAVINOVA TONE
04H	E.PIANO 1
05H	E.PIANO 2
06H	HARPSICHORD
07H	VIBES
08H	STRINGS
09H	ORGAN
0AH	SLOW-ATTACK STRINGS

** No voice change is made when dd > 0AH.*

4. SYSTEM REALTIME MESSAGES

Active Sensing (FEH)

Transmitted every 200 milliseconds. If not received for more than 400 milliseconds a NOTE OFF occurs.

5. SYSTEM EXCLUSIVE MESSAGES

Data format: [F0H] -> [43H] -> [nx] -> [ff] . . . [F7H]

n = 0, ff = 7CH: Panel data reception. Panel data follows 7CH.
n = 2, ff = 7CH: Panel data transmitted when this data received.
n = 2, ff = 7DH: Model ID code transmitted when this data received.

** Panel data is comprised of voice number, brilliance, reverb and effect settings.*

6. MULTI TIMBRE MODE

Data format: [F0H] -> [43H] -> [73H] -> [idH] -> [nnH] -> [F7H]

43H = YAMAHA ID
73H = CLAVINOVA ID
idH = 22H (CLP-760 ID)*
nn = 15H: MULTI TIMBRE mode ON;
nn = 13H: MULTI TIMBRE mode OFF

** In addition to model ID code, the standard ID code [01H] is also accepted.*

7. BRILLIANCE, REVERB & EFFECT

Data format: [F0H] -> [43H] -> [73H] -> [22H] -> [11H] -> [0x] -> [cc] -> [dd] -> [F7H]

43H = YAMAHA ID
73H = CLAVINOVA ID
22H = (CLP-760 ID)
11H = BRILLIANCE/REVERB/EFFECT control confirm
0x = Control MIDI Channel

cc	CONTROL	dd
08H	BALANCE	00H ~ 7FH; 00H = Lower MAX 7FH = Upper MAX
58H	BRILLIANCE	00H = NORMAL 01H = MELLOW 02H = BRIGHT
59H	REVERB	00H = OFF 01H = STEREO DELAY 02H = ROOM 03H = HALL
5AH	DUAL/SPLIT	00H = OFF 01H = DUAL 02H = SPLIT
5BH	EFFECT	00H = OFF 01H = DETUNE 02H = CHORUS 03H = TREMOLO
5CH	2nd VOICE	00H ~ 0AH = 2nd VOICE NO.

** In the MULTI TIMBRE mode BRILLIANCE, DUAL/SPLIT, EFFECT and 2nd VOICE can be set independently for each channel, while REVERB and EFFECT affects all voices and is received on the basic receive channel.*

YAMAHA [Clavinova] Date : 04/16, 1990
Model CLP-760 MIDI Implementation Chart Version : 1.0

Function		Transmitted	Recognized	Remarks
Basic	Default	1	1	
Channel	Changed	1-16	1-16	
Mode	Default	3	1	
	Messages	X	OMNIon,OMNIoff	
		**********	X	
Note Number		21-108	21-108	
	True voice	**********	21-108	
Velocity	Note on	0 9nH,v=1-127	0 v=1-127	
	Note off	X 9nH,v=0	X	
After Touch	Key's	X	X	
	Ch's	X	X	
Pitch Bender		X	X	
Control Change	07	X	0	Volume
	11	X	0	Expression
	64	0	0	Damper
	66	0	0	Sostenuto
	67	0	0	Soft Pedal
	121	X	0	Reset All Controllers
Program Change		0 0-10	0 0-10	
	True #	**********	0-10	
System Exclusive		0	0	
System Common	Song Pos	X	X	
	Song Sel	X	X	
	Tune	X	X	
System Real Time	Clock	X	X	
	Commands	X	X	
Aux Mes- sages	Local ON/OFF	X	0	
	All Notes OFF	X	0 (123-125) *1	
	Active Sense	0	0	
	Reset	X	X	

Notes : *1 = receive (123) if omni off or multi-timbre on

Mode 1 : OMNI ON, POLY Mode 2 : OMNI ON, MONO O : Yes
Mode 3 : OMNI OFF, POLY Mode 4 : OMNI OFF, MONO X : No

■ TEST PROGRAM

1. HOW TO ENTER THE TEST PROGRAM

Press A-1 and C7 keys of the keyboard immediately the POWER switch was turned on.

2. EXIT TEST PROGRAM

To exit the test program mode, press B-1 key.

3. VERSION DISPLAY

In order to verify the ROM version of the CLP-760, press C0 key on the test program mode then the LED indicators will indicate the version of the MAIN ROM.
(e.g. When indicating the ROM is the version 3.)

○ ○ ○ ○ ○ ○ ○ ○ ● ●

4. INITIAL TEST

The following tests will be performed automatically when the test program is initiated.

1. The 2nd make contact of the keyboard check.
2. Pedal variable resistor off check.
3. Panel switches off check.
4. Voice ROM check.

TEST RESULTS
If each test checks OK then the Test program proceed to the Test Program entry mode and the CLP760 will wait for you to activate the next test.

If Initial Test 1 is NG the system will return to normal operation.
If Initial Test 2 is NG the PIANO 1 LED will light.
If Initial Test 3 is NG the PIANO 2 LED will light.
If Initial Test 4 is NG the PIANO 3 LED will light.

EXITING THE TEST
This test automatically proceed to the Test Program entry mode if the items under test are OK. If an error occurs turn the power off and then on again to exit the test.

5. PROCEEDING THROUGH THE TESTS

Use keys of the keyboard to move through the various tests of the test program.
Pressing: [D0] will execute the panel LED indicators check. When D0 is pressed and hold, LED indicators will light in succession.
[E0] will turn off LED indicators which are lighting.
[F0] will execute the external RAM read/write check. When this test is performed, memorized data is cleared. If an error is detected, the CLAVINOVA TONE LED will light.
[G0] will perform the MIDI check. Before executing this test, connect the MIDI OUT to MIDI IN jack with a MIDI cable. If an error occurs, the E. PIANO 1 LED will light.
[A0] will output a sinwave at 1 kHz from the M3-A IC (IC10). (L; 0 dB, R; 0 dB)
[B0] will output a sinwave at 440 Hz from the M3-A IC (IC10). (L; 0 dB, R; −3 dB)
[C1] will output a sinwave at 440 Hz from the M3-B IC (IC11). (L; 0 dB, R; −3 dB)
[D1] will output a sinwave at 440 Hz from the M3-C IC (IC12). (L; 0 dB, R; −3 dB)
[E1] will output a sinwave at 440 Hz from the M3-D IC (IC13). (L; 0 dB, R; −3 dB)
[F1] will turn out signals which are sounded on the previous tests.
[C3] will output a sinwave at 440 Hz from the M3-A IC (IC10). (L; 0 dB, R; −∞ dB)
[G3] will output a sinwave at 440 Hz from the M3-A IC (IC10). (L; −∞ dB, R; 0 dB)
[C4] will output signals in succession from channel 1 through channel 16 of M3-A IC (IC10). (L; 0 dB, R; 0 dB)
[D4] will output signals in succession from channel 1 through channel 16 of M3-B IC (IC11). (L; 0 dB, R; 0 dB)
[E4] will output signals in succession from channel 1 through channel 16 of M3-C IC (IC12). (L; 0 dB, R; 0 dB)
[F4] will output signals in succession from channel 1 through channel 16 of M3-D IC (IC13). (L; 0 dB, R; 0 dB)

■テストプログラム

1．テストプログラムの起動

POWER ON直後に、[A−1] KEY, [C7] KEYをONする事によりテストプログラムモードとなります。

2．テストプログラムモードになると、以下の項目を自動的にチェックします。

(1) 鍵盤2ndメイクSWチェック　　：NG ➡ TEST PROGRAM MODEに入りません。
(2) ペダルボリュームOFFチェック　　：NG ➡ PIANO 1 LED点滅
(3) パネルSW OFFチェック　　：NG ➡ PIANO 2 LED点滅
(4) 音源パラメーターROM装着チェック　：NG ➡ PIANO 3 LED点滅

3．KEY ON毎に、そのKEYに該当するテストを行ないます。

[B−1] ：システムリセット
[C0] ：ボイスLEDでROMバージョン表示
例)　○ ○ ○ ○ ○ ○ ○ ○ ● ●　　VERSION 3
[D0] ：パネルの全LEDを点灯する。(KEYを押し続けると順次点灯します)
[E0] ：パネルの全LEDを消灯します。
[F0] ：外付けRAMチェック　　：NG ➡ CLAVINOVA TONE LED点滅
(この時、バックアップされていたデータはなくなります。)
[G0] ：MIDI CHECK　　：NG ➡ E. PIANO1 LED点滅
(MIDI端子IN, OUTをMIDIケーブルでショートし、KEYをONするとOUTよりデータが出力されINに同じデータが戻ってくればOKです。)
[A0] ：音源M3−A(IC10) 1KHz, 正弦波を発音。(L:−0dB R:−0dB)
[B0] ：音源M3−A(IC10) 440Hzの正弦波を発音。(L:−0dB R:−3dB)
[C1] ：音源M3−B(IC11) 440Hzの正弦波を発音。(L:−0dB R:−3dB)
[D1] ：音源M3−C(IC12) 440Hzの正弦波を発音。(L:−0dB R:−3dB)
[E1] ：音源M3−D(IC13) 440Hzの正弦波を発音。(L:−0dB R:−3dB)
[F1] ：音源M3−A, B, C, Dを発音OFF。

[C3] ：音源M3−A(IC10) 440Hzの正弦波を発音。(L:−0dB R:−∞dB)
[G3] ：音源M3−A(IC10) 440Hzの正弦波を発音。(L:−∞dB R:−0dB)

[C4] ：音源M3−A(IC10) 1−16ch順次発音。(L:−0dB R:−0dB)
[D4] ：音源M3−B(IC11) 1−16ch順次発音。(L:−0dB R:−0dB)
[E4] ：音源M3−C(IC12) 1−16ch順次発音。(L:−0dB R:−0dB)
[F4] ：音源M3−D(IC13) 1−16ch順次発音。(L:−0dB R:−0dB)

CLP-760

■ CIRCUIT BOARDS（シート基板図）

● DM Circuit Board

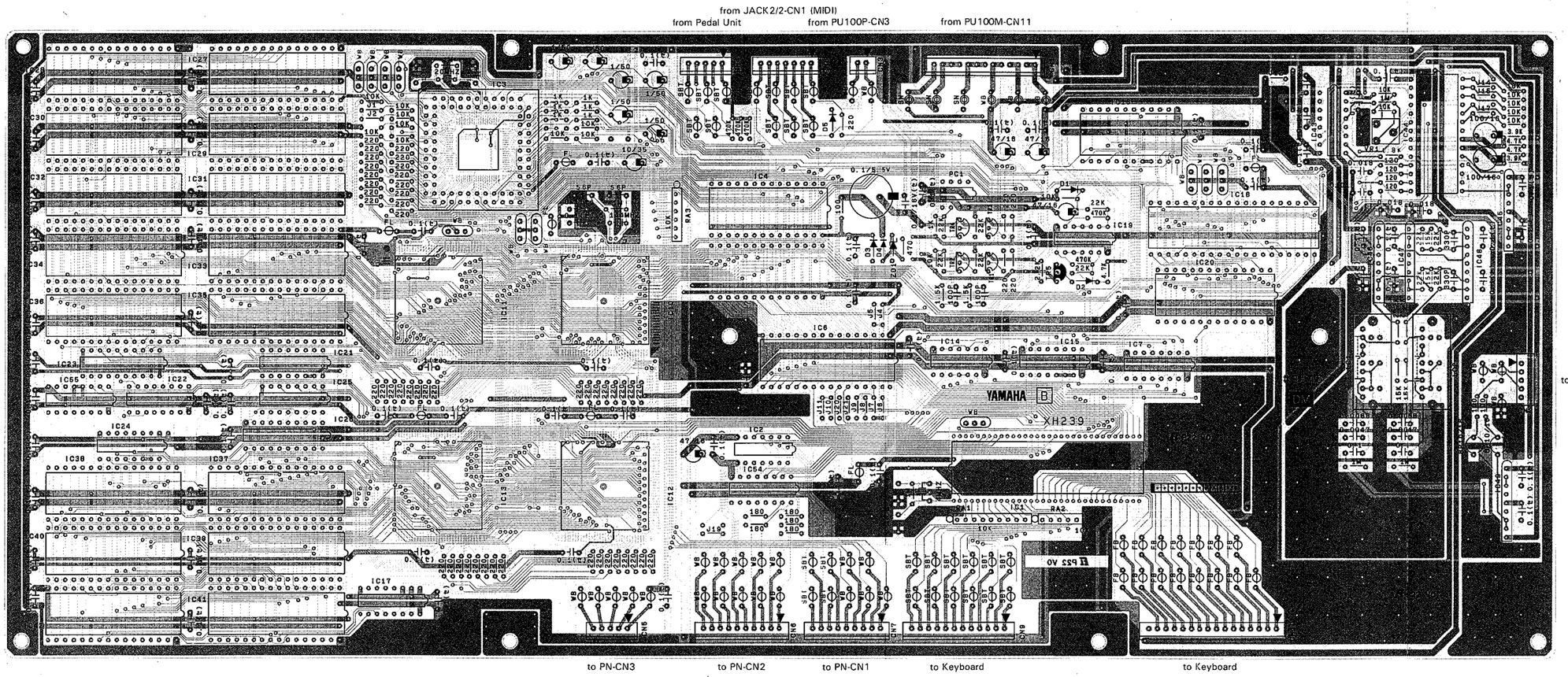

* Adjust VR1 so that the voltage between pin9 and pin12 of IC43 is within ±10mV using a digital volt meter. Upon completion of this adjustment, apply a little screw-lock or paint to it to secure.

（IC43の9ピンと12ピン間の電圧が±10mV以下になるようにVR1を調整します。調整後、VR1にネジロックを塗布しておくこと。尚、測定には、デジタルボルトメータを使用します。）

Notes)

Circuit Board: DM (VJ101800) XH239B0

1. IC
   - IC 1: YM6633 (XH543A00) KSN
   - IC 3: HD6435328ZA17F (XH645A00) CPU (H8/532)
   - IC 4: LH5164D-10L (XF876A00) 64K SRAM
   - IC 6: PARA. (XH628A00) ROM 4M
   - IC 7, 55: SN74HC138N (IR013850) DECODER-3
   - IC 8, 9: SN74HC08N (IR000850) AND
   - IC10～13: YM7119 (XG995A00) M3
   - IC14: SN74HC02N (IR000250) NOR
   - IC15, 17: SN74HC139N (IR013950) DECODER-2
   - IC16: YM3808 (XA798001) MIX
   - IC18: YM3413 (XE449A00) LDSP
   - IC19: SN74HC132N (IR013250) NAND
   - IC20: TC51832PL-10 (XC628A00) 256K PSRAM
   - IC21, 22, 24, 25: SN74HC365N (IR036550) BUS DRIVER
   - IC23, 26: SN74HC245N (IR024550) TRANSCEIVER
   - IC27: WAVE-1 (XH629A00) ROM 4M
   - IC28: WAVE-2 (XH630A00) ROM 4M
   - IC29: WAVE-3 (XH631A00) ROM 4M
   - IC30: WAVE-4 (XH632A00) ROM 4M
   - IC31: WAVE-5 (XH633A00) ROM 4M
   - IC32: WAVE-6 (XH634A00) ROM 4M
   - IC33: WAVE-7 (XH635A00) ROM 4M
   - IC34: WAVE-8 (XH636A00) ROM 4M
   - IC35: WAVE-9 (XH637A00) ROM 4M
   - IC36: WAVE-10 (XH638A00) ROM 4M
   - IC37: WAVE-11 (XH639A00) ROM 4M
   - IC38: WAVE-12 (XH640A00) ROM 4M
   - IC39: WAVE-13 (XH641A00) ROM 4M
   - IC40: WAVE-14 (XH642A00) ROM 4M
   - IC41: WAVE-15 (XH643A00) ROM 4M
   - IC42: WAVE-16 (XH644A00) ROM 4M
   - IC43: AD1856 (XF371A00) DAC
   - IC44: YM3029 (XF237A00) AFD0
   - IC45, 48, 49: μPC4570HA (XB247001) OP AMP.
   - IC46, 47: NJM072S (XA778001) OP AMP.
2. Photo Coupler
   - PC 1: 6N137 (VD473200)
3. Transistor
   - Tr 1～4: 2SC1740S R, S (IC174070)
   - Tr 5: 2SA1015 O, Y (IA101550)
4. Transistor Array
   - IC 2: TD62703P (VF519600)
   - IC54: MC1413P (VH441500)
5. Diode
   - D 1～5: 1SS133 (IF003450)
6. Zener Diode
   - ZD 1: MTZ5.6B 5.6V (VA007600)
7. Resistor Array
   - RA 1: RGLD8X103J (VE445200)
   - RA 2: RGLD4X103J (VE443500)
   - RA 3: RGLD5X103J (VJ252800)
8. Semiconductive Cera. Cap.
   - 0.1μF 16V Z (FZ004110)
9. Super Capactor: 0.1F 5.5V FYD0H (VI055000)

Components side（部品側）

10. Coil
    - SN: 10μH SN3-205 (GE901870)
    - SBT/FL: 20μHFL5R200QNT (VB835000) or 60μH SBT-0460T (VD473700) or 60μH SBT0260TF (VF968800)
11. LC Filter
    - (VJ446300)
12. Ceramic Resonator
    - 4MHZ: CST4.00MGW040 (VI653000)
13. Quartz Crystal Unit
    - 6.144MHZ: 6.144M AT-49 (VH949900)
    - 20MHZ: 20M AT-49 (VI927300)
14. Ferrite Bead
    - FB: BL02RN1-R62T4 (GE300610)
    - WB: BL02RN2-R62T4 (GE300670)
15. Trimmer Potentiometer
    - VR1: B100K (VB5932000) AD adj.

CLP-760

● PN Circuit Board

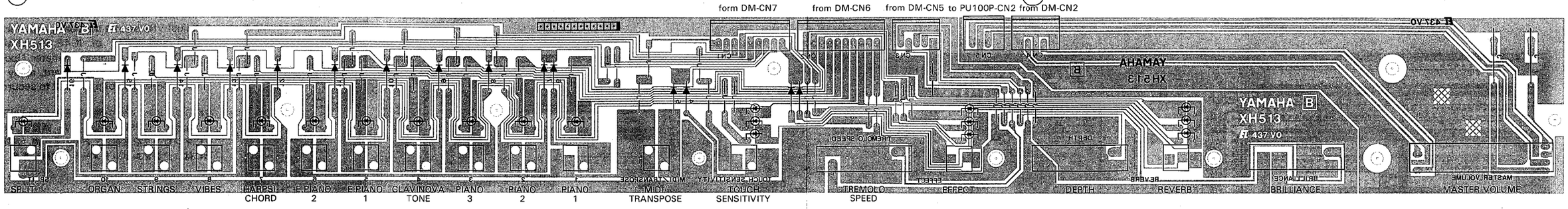

Pattern side (パターン側)

Notes)

Circuit Board: PN (NX004900) XH513B0

1. Diode
   ⊣⊢: 1SS133 (IF003450)
2. LED
   Ⓚ: SLZ-190B-03 RE (VD180000)
3. Slide Pot.: A10K × 2 (VK369000) MASTER VOLUME
   B10K RS15111C with click (VJ290600)
   BRILLIANCE, REVERB, EFFECT
4. Push Switch: KEC10901 (KA906550)

● JACK Circuit Board

JACK 1/2

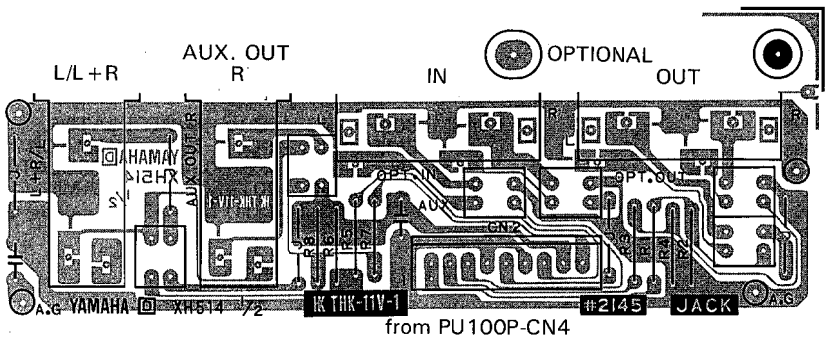

from PU100P-CN4

Components side (部品側)

JACK 2/2

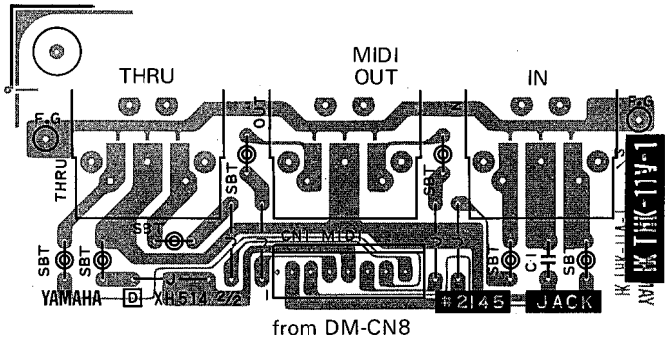

from DM-CN8

Components side (部品側)

Notes)

	Circuit Board:	JACK 1/2 (NX004910) XH514D0 JACK 2/2 (NX004920) XH514D0
1.	Coil SBT:	60μHSBT0260TF (VF968800) 80μSBT-0180W (VF456600)
2.	DIN Jack:	5P YKF51-50 (VB312500) MIDI
3.	Phone Jack:	HLJ0521 (LB202330) AUX OUT
4.	Pin Jack:	YKC21-0188 (VI145300) OPTIONAL

JACK: 2NA-VJ35260 ④
HP: 2NA-VF56770 ⓪

● HP Circuit Board

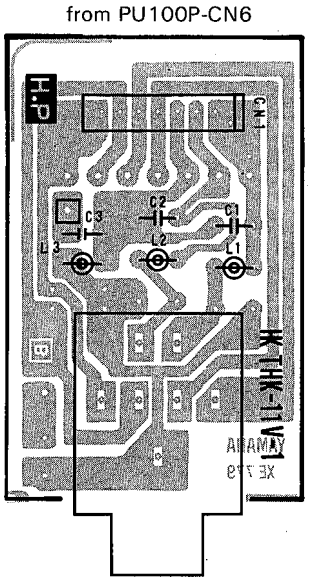

Components side (部品側)

Notes)

Circuit Board: HP (VF710500) XE779B0

1. Semiconductive Cera. Cap.
   C 1~3: 0.1μF 16V Z (FZ004110)
2. Coil
   L 1~3: 20μFFL5R200QN (VB971100)
3. Phone Jack: YKB21-5006 (LB101870) HEADPHONES

CLP-760

● PU100M Circuit Board

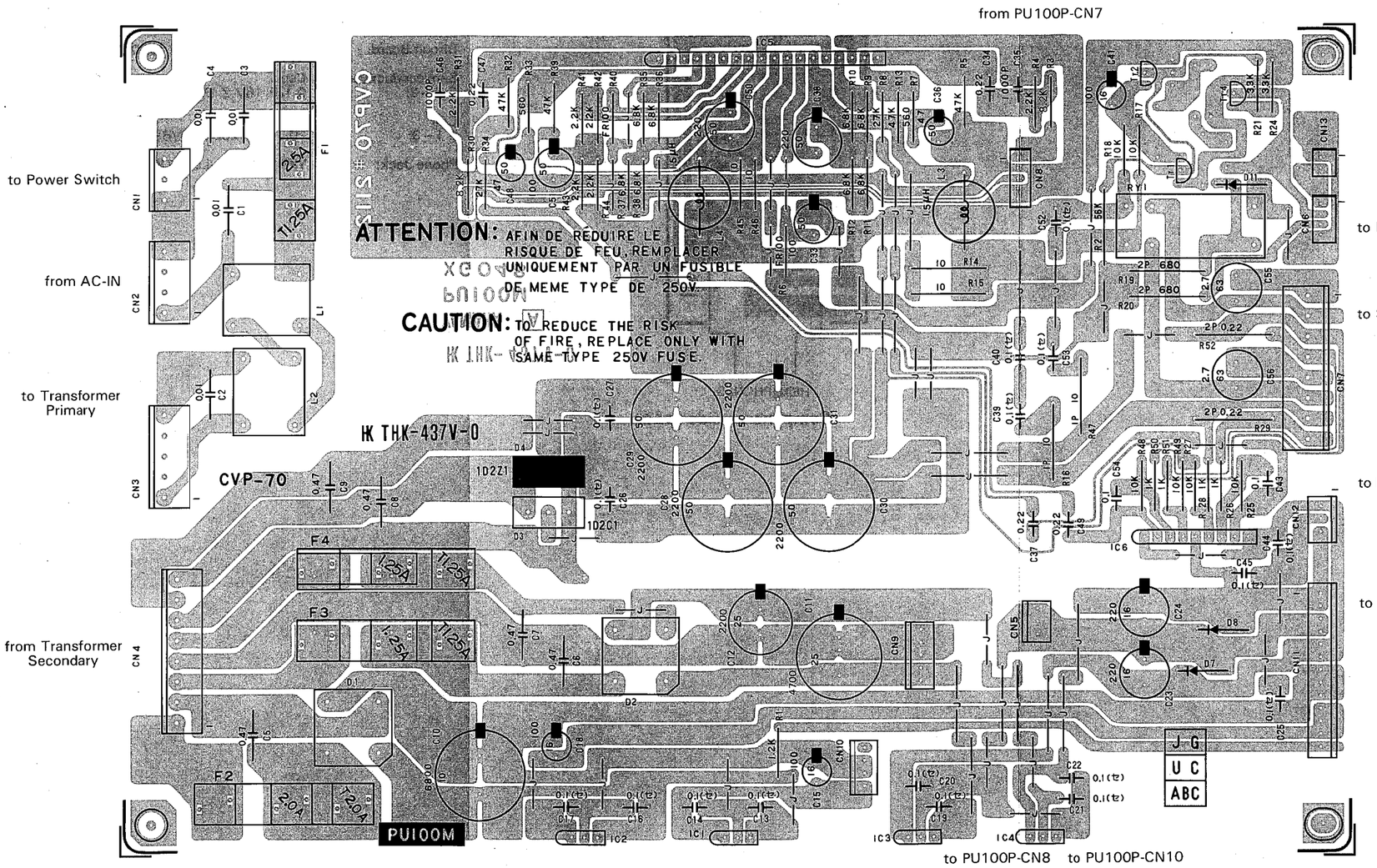

Components side (部品側)

Notes)

Circuit Board : PU100M (VJ539800) XG048A0 J, X, M
PU100M (VJ101500) XG048A0 U, C
PU100M (VJ101600) XG048A0 H, B, A

1. IC
   - IC 2: NJM7805FA (XC719001) 5V REGULATOR
   - IC 3: NJM78M12A (XB249001) 12V REGULATOR
   - IC 4: NJM79M12FA (XD343A00) −12V REGULATOR
   - IC 5: STK4191-5 (XB029001) 50W 2CH P AMP.
   - IC 6: μPC4570HA (XB247001) OP AMP.
2. Transistor
   - 1, 2, 4: 2SC1815 GR (IC181530)
3. Diode
   - 5 ~ 7: 11ES4 (VB481900)
4. Diode Stack
   - D 1, 2: 4D4B42 3A 200V (IH001790)
   - D 3: 1D2C1 2A 200V (VB493200)
   - D 4: 1D2Z1 2A 200V (VB493300)
5. Metal Oxide Film Resistor
   - R16, 47: 10Ω 1W (VC742500)
   - R19, 20: 680Ω 2W (VC761000)
   - R29, 52: 0.22Ω 2W (VC751900)
6. Fuse Resistor
   - R 6, 40: 100Ω 1/4 (HW095100)
7. Ceramic Cap.
   - C 1 ~ 4: 0.01μF 400V (FI384100) or 0.01μF 400V (FI494100)
8. Semiconductive Cera. Cap.
   - Marked 0.1(セ): 0.1μF 50V (FZ007280)
9. Coil
   - L 1: 10μHSU10V20010 (VD293400)
   - L 2: 10μSU10VD20010 (VF790900)
   - L 3, 4: RZ-001 1.5UH (GD900470)
10. Relay
    - RY 1: DC DH24D2-OT(M) (KC001940) 24V
11. Fuse
    - F 1: T3.0A 250V (KB000360) J, X, M
    - F 2: T1.25A 250V (KB000430) J, X, M
    - F 3, 4: T2.00A 250V (KB000350) J, X, M
    - F 1: T3.0A 250V (KB002650) U, C
    - F 2: T1.25A 250V (KB001450) U, C
    - F 3.4: T2.00A 250V (KB001240) U, C
    - F 1: T1.6A 250V (KB002620) H, B, A
    - F 2: T1.25A 250V (KB000680) H, B, A
    - F 3, 4: T2.00A 250V (KB000750) H, B, A

CLP-760

● PU100P Circuit Board

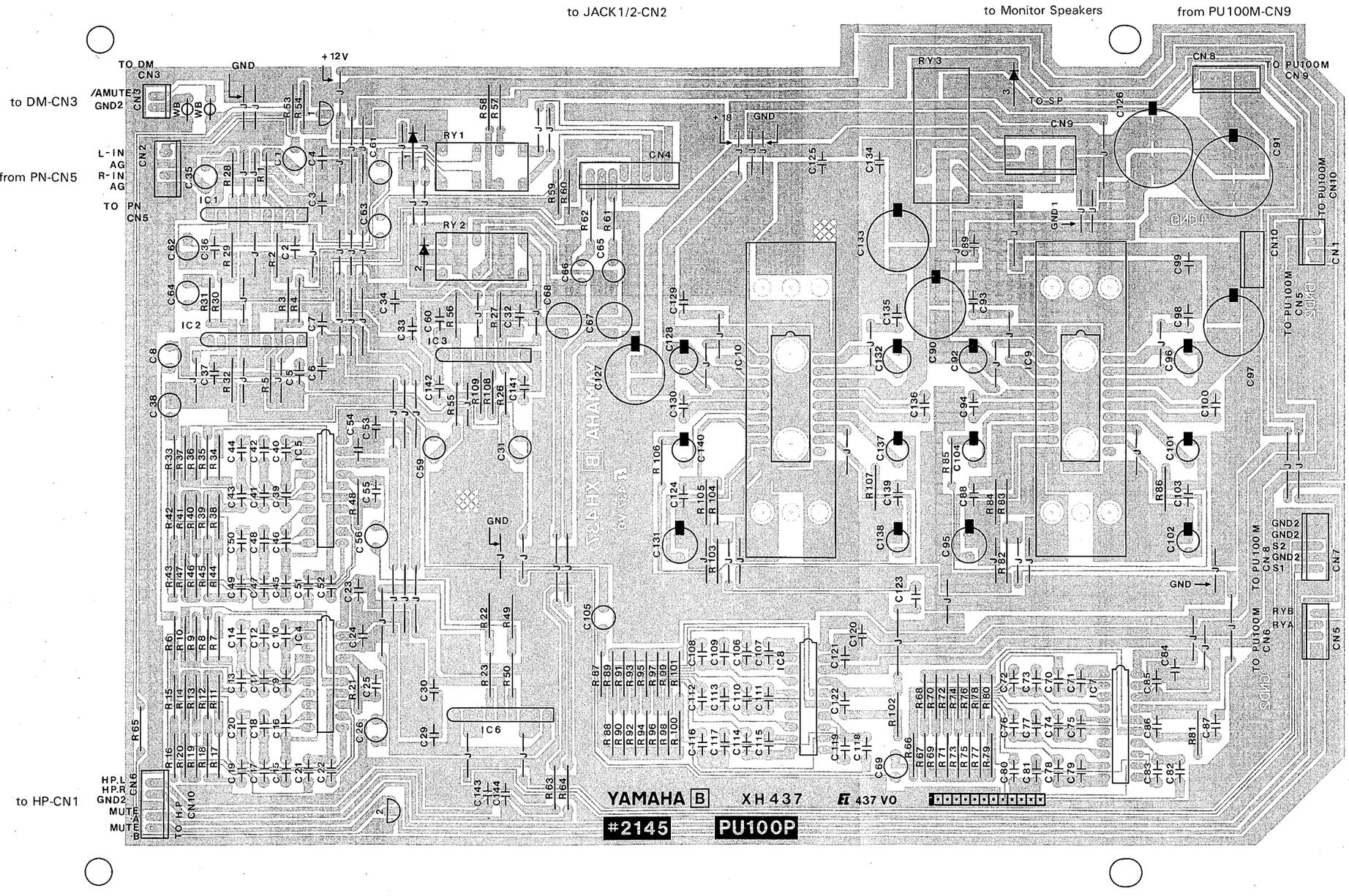

Components side (部品側)

Notes)

Circuit Board: PU100P (VJ101400) XH437B0

1. IC
   - IC 1.2.6: μPC4570HA (XB247001) OP AMP.
   - IC 3: M5216L (XB419001) OP AMP. 2CH
   - IC 4, 5, 7, 8: M5229P (XG203A00) G.EQUALIZER
   - IC 9, 10: LA4500 (IG151600) P AMP.
2. Transistor
   - 1, 2: 2SC1815 GR (IC181530)
3. Diode
   - 1 ~ 3: 1SS133 (IF003450)
4. Semiconductive Cera. Cap.
   - 0.1μF 16V Z (FZ004110)
5. Relay
   - RY 1, 2: DC RY12W (KC001900) 12V
   - RY 3: DC DH24D 20T (M) (KC001940) 24V

● PU100M Circuit Board Capacitors and Resistors

C001	Ceramic Capacitor	0.010	400V U.C.S.V
C001	Ceramic Capacitor	0.010	400V J.U.C.S
C002	Ceramic Capacitor	0.010	400V U.C.S.V
C002	Ceramic Capacitor	0.010	400V J.U.C.S
C003	Ceramic Capacitor	0.010	400V U.C.S.V
C003	Ceramic Capacitor	0.010	400V J.U.C.S
C004	Ceramic Capacitor	0.010	400V U.C.S.V
C004	Ceramic Capacitor	0.010	400V J.U.C.S
C005	Mylar Capacitor	0.4700	100V K
C006	Mylar Capacitor	0.4700	100V K
C007	Mylar Capacitor	0.4700	100V K
C008	Mylar Capacitor	0.4700	100V K
C009	Mylar Capacitor	0.4700	100V K
C010	Electrolytic Capacitor	6800	16V
C011	Electrolytic Capacitor	4700	25V
C012	Electrolytic Capacitor	2200	25V
C016	Semiconductive Cera. Cap.	0.1000	50V Z
C017	Semiconductive Cera. Cap.	0.1000	50V Z
C018	Electrolytic Capacitor	100.00	16V
C019	Semiconductive Cera. Cap.	0.1000	50V Z
C020	Semiconductive Cera. Cap.	0.1000	50V Z
C021	Semiconductive Cera. Cap.	0.1000	50V Z
C022	Semiconductive Cera. Cap.	0.1000	50V Z
C023	Electrolytic Capacitor	220.00	16V
C024	Electrolytic Capacitor	220.00	16V
C025	Semiconductive Cera. Cap.	0.1000	50V Z
C026	Semiconductive Cera. Cap.	0.1000	50V Z
C027	Semiconductive Cera. Cap.	0.1000	50V Z
C028	Electrolytic Capacitor	2200	50V
C029	Electrolytic Capacitor	2200	50V
C030	Electrolytic Capacitor	2200	50V
C031	Electrolytic Capacitor	2200	50V
C033	Electrolytic Capacitor	100.00	50V
C034	Mylar Capacitor	0.2200	50V K
C035	Ceramic Capacitor	1000P	50V K
C036	Electrolytic Capacitor	47.00	50V
C037	Mylar Capacitor	0.2200	50V K
C038	Electrolytic Capacitor	220.00	50V
C039	Semiconductive Cera. Cap.	0.1000	50V Z
C040	Semiconductive Cera. Cap.	0.1000	50V Z
C041	Electrolytic Capacitor	100.00	16V
C043	Mylar Capacitor	0.1000	50V K
C044	Semiconductive Cera. Cap.	0.1000	50V Z
C045	Semiconductive Cera. Cap.	0.1000	50V Z
C046	Ceramic Capacitor	1000P	50V K
C047	Mylar Capacitor	0.2200	50V K
C048	Electrolytic Capacitor	47.00	50V
C049	Mylar Capacitor	0.2200	50V K
C050	Electrolytic Capacitor	220.00	50V
C051	Electrolytic Capacitor	100.00	50V
C052	Semiconductive Cera. Cap.	0.1000	50V Z
C053	Semiconductive Cera. Cap.	0.1000	50V Z
C054	Mylar Capacitor	0.1000	50V K
C055	Electrolytic Capacitor	1.50	63V
C056	Electrolytic Capacitor	1.50	63V
R001	Carbon Resistor	1.2K	1/6 J
R002	Carbon Resistor	56.0K	1/6 J
R003	Carbon Resistor	8.2K	1/6 J
R004	Carbon Resistor	2.2K	1/6 J
R005	Carbon Resistor	47.0K	1/6 J
R006	Fuse Resistor	100.0	1/4 J
R007	Carbon Resistor	560.0	1/6 J
R008	Carbon Resistor	27.0K	1/6 J
R009	Carbon Resistor	6.8K	1/4 J
R010	Carbon Resistor	6.8K	1/4 J
R011	Carbon Resistor	6.8K	1/4 J
R012	Carbon Resistor	6.8K	1/4 J
R013	Carbon Resistor	47.0K	1/6 J
R014	Carbon Resistor	10.0	1/4 J
R015	Carbon Resistor	10.0	1/4 J
R016	Metal Oxide Film Resistor	10.0	1W J
R017	Carbon Resistor	10.0K	1/6 J
R018	Carbon Resistor	10.0K	1/6 J
R019	Metal Oxide Film Resistor	680.0	2W J
R020	Metal Oxide Film Resistor	680.0	2W J
R021	Carbon Resistor	3.3K	1/6 J
R024	Carbon Resistor	3.3K	1/6 J
R025	Carbon Resistor	10.0K	1/6 J
R026	Carbon Resistor	1.0K	1/6 J
R027	Carbon Resistor	10.0K	1/6 J
R028	Carbon Resistor	1.0K	1/6 J
R029	Metal Oxide Film Resistor	0.22	2W J
R030	Carbon Resistor	8.2K	1/6 J
R031	Carbon Resistor	2.2K	1/6 J
R032	Carbon Resistor	47.0K	1/6 J
R033	Carbon Resistor	560.0	1/6 J
R034	Carbon Resistor	27.0K	1/6 J
R035	Carbon Resistor	6.8K	1/4 J
R036	Carbon Resistor	6.8K	1/4 J
R037	Carbon Resistor	6.8K	1/4 J
R038	Carbon Resistor	6.8K	1/4 J
R039	Carbon Resistor	47.0K	1/6 J
R040	Fuse Resistor	100.0	1/4 J
R041	Carbon Resistor	2.2K	1/4 J
R042	Carbon Resistor	2.2K	1/4 J
R043	Carbon Resistor	2.2K	1/4 J
R044	Carbon Resistor	2.2K	1/4 J
R045	Carbon Resistor	10.0	1/4 J
R046	Carbon Resistor	10.0	1/4 J
R047	Metal Oxide Film Resistor	10.0	1W J
R048	Carbon Resistor	10.0K	1/6 J
R049	Carbon Resistor	10.0K	1/6 J
R050	Carbon Resistor	1.0K	1/6 J
R051	Carbon Resistor	1.0K	1/6 J
R052	Metal Oxide Film Resistor	0.22	2W J

● PU100P Circuit Board Capacitors

C001	Electrolytic Capacitor	2.20	50V
C002	Ceramic Capacitor	47P	50V K
C003	Semiconductive Cera. Cap.	0.1000	16V N
C004	Semiconductive Cera. Cap.	0.1000	16V N
C005	Ceramic Capacitor	10P	50V K
C006	Semiconductive Cera. Cap.	0.1000	16V N
C007	Semiconductive Cera. Cap.	0.1000	16V N
C008	Electrolytic Capacitor	3.30	50V
C009	Mylar Capacitor	0.4700	50V J
C010	Mylar Capacitor	0.1500	50V J
C011	Mylar Capacitor	0.2200	50V J
C012	Mylar Capacitor	0.0390	50V K
C013	Mylar Capacitor	0.0470	50V K
C014	Mylar Capacitor	0.0220	50V K
C015	Mylar Capacitor	0.0820	50V K
C016	Mylar Capacitor	0.0680	50V K
C017	Mylar Capacitor	0.0180	50V K
C018	Mylar Capacitor	0.0180	50V K
C019	Mylar Capacitor	0.0068	50V K
C020	Mylar Capacitor	0.0018	50V K
C021	Mylar Capacitor	0.0120	50V K
C022	Mylar Capacitor	0.0100	50V K
C023	Semiconductive Cera. Cap.	0.1000	16V N
C024	Semiconductive Cera. Cap.	0.1000	16V N
C025	Ceramic Capacitor	1500P	50V K
C026	Electrolytic Capacitor	3.30	50V
C029	Semiconductive Cera. Cap.	0.1000	16V N
C030	Semiconductive Cera. Cap.	0.1000	16V N
C031	Electrolytic Capacitor	1.00	50V
C032	Ceramic Capacitor	100P	50V K
C033	Semiconductive Cera. Cap.	0.1000	16V N
C034	Semiconductive Cera. Cap.	0.1000	16V N
C035	Electrolytic Capacitor	2.20	50V
C036	Ceramic Capacitor	47P	50V K
C037	Ceramic Capacitor	10P	50V K
C038	Electrolytic Capacitor	3.30	50V
C039	Mylar Capacitor	0.4700	50V J
C040	Mylar Capacitor	0.1500	50V J
C041	Mylar Capacitor	0.2200	50V J
C042	Mylar Capacitor	0.0390	50V K
C043	Mylar Capacitor	0.0470	50V K
C044	Mylar Capacitor	0.0220	50V K
C045	Mylar Capacitor	0.0820	50V K
C046	Mylar Capacitor	0.0680	50V K
C047	Mylar Capacitor	0.0180	50V K
C048	Mylar Capacitor	0.0180	50V K
C049	Mylar Capacitor	0.0068	50V K
C050	Mylar Capacitor	0.0018	50V K
C051	Mylar Capacitor	0.0120	50V K
C052	Mylar Capacitor	0.0100	50V K
C053	Semiconductive Cera. Cap.	0.1000	16V N
C054	Semiconductive Cera. Cap.	0.1000	16V N
C055	Ceramic Capacitor	1500P	50V K
C056	Electrolytic Capacitor	3.30	50V
C059	Electrolytic Capacitor	1.00	50V
C060	Ceramic Capacitor	100P	50V K
C061	Electrolytic Capacitor	10.00	16V
C062	Electrolytic Capacitor	10.00	16V
C063	Electrolytic Capacitor	1.00	50V
C064	Electrolytic Capacitor	1.00	50V
C065	Electrolytic Capacitor	4.70	25V
C066	Electrolytic Capacitor	4.70	25V
C067	Electrolytic Capacitor	47.00	16V
C068	Electrolytic Capacitor	47.00	16V
C069	Electrolytic Capacitor	1.00	50V
C070	Mylar Capacitor	0.1500	50V J
C071	Mylar Capacitor	0.1500	50V J
C072	Mylar Capacitor	0.0680	50V K
C073	Mylar Capacitor	0.0680	50V K
C074	Mylar Capacitor	0.0330	50V K
C075	Mylar Capacitor	0.0220	50V K
C076	Mylar Capacitor	0.0330	50V K
C077	Ceramic Capacitor	560P	50V K
C078	Mylar Capacitor	0.0120	50V K
C079	Mylar Capacitor	0.0120	50V K
C080	Mylar Capacitor	0.0470	50V K
C081	Mylar Capacitor	0.0390	50V K
C084	Semiconductive Cera. Cap.	0.1000	16V N
C085	Semiconductive Cera. Cap.	0.1000	16V N
C086	Ceramic Capacitor	1500P	50V K
C087	Mylar Capacitor	0.0560	50V K
C088	Ceramic Capacitor	1000P	50V K
C089	Mylar Capacitor	0.1500	50V J
C090	Electrolytic Capacitor	1000	25V
C091	Electrolytic Capacitor	4700	25V
C092	Electrolytic Capacitor	100.00	16V
C093	Ceramic Capacitor	0.0100	50V Z
C094	Ceramic Capacitor	47P	50V K
C095	Electrolytic Capacitor	220.00	25V
C096	Electrolytic Capacitor	100.00	16V
C097	Electrolytic Capacitor	1000	25V
C098	Ceramic Capacitor	0.0100	50V Z
C099	Mylar Capacitor	0.1500	50V J
C100	Ceramic Capacitor	47P	50V K
C101	Electrolytic Capacitor	100.00	10V
C102	Electrolytic Capacitor	100.00	25V
C103	Ceramic Capacitor	0.0100	50V Z
C104	Electrolytic Capacitor	100.00	10V
C105	Electrolytic Capacitor	1.00	50V
C106	Mylar Capacitor	0.1500	50V J
C107	Mylar Capacitor	0.1500	50V J
C108	Mylar Capacitor	0.0680	50V K
C109	Mylar Capacitor	0.0680	50V K
C110	Mylar Capacitor	0.0330	50V K
C111	Mylar Capacitor	0.0220	50V K

C112	Mylar Capacitor	0.0330	50V	K マイラーコン
C113	Ceramic Capacitor	560P	50V	K セラコン（B）
C114	Mylar Capacitor	0.0120	50V	K マイラーコン
C115	Mylar Capacitor	0.0120	50V	K マイラーコン
C116	Mylar Capacitor	0.0470	50V	K マイラーコン
C117	Mylar Capacitor	0.0390	50V	K マイラーコン
C120	Semiconductive Cera. Cap.	0.1000	16V	N 半導体セラコン
C121	Semiconductive Cera. Cap.	0.1000	16V	N 半導体セラコン
C122	Ceramic Capacitor	1500P	50V	K セラコン（B）
C123	Mylar Capacitor	0.0560	50V	K マイラーコン
C124	Ceramic Capacitor	1000P	50V	K セラコン（B）
C125	Mylar Capacitor	0.1500	50V	J マイラーコン
C126	Electrolytic Capacitor	4700	25V	ケミコン
C127	Electrolytic Capacitor	1000	25V	ケミコン
C128	Electrolytic Capacitor	100.00	16V	ケミコン
C129	Ceramic Capacitor	0.0100	50V	Z セラコン（F）
C130	Ceramic Capacitor	47P	50V	K セラコン（B）
C131	Electrolytic Capacitor	220.00	25V	ケミコン
C132	Electrolytic Capacitor	100.00	16V	ケミコン
C133	Electrolytic Capacitor	1000	25V	ケミコン
C134	Mylar Capacitor	0.1500	50V	J マイラーコン
C135	Ceramic Capacitor	0.0100	50V	Z セラコン（F）
C136	Ceramic Capacitor	47P	50V	K セラコン（B）
C137	Electrolytic Capacitor	100.00	10V	ケミコン
C138	Electrolytic Capacitor	100.00	25V	ケミコン
C139	Ceramic Capacitor	0.0100	50V	Z セラコン（F）
C140	Electrolytic Capacitor	100.00	10V	ケミコン
C141	Ceramic Capacitor	150P	50V	K セラコン（B）
C142	Ceramic Capacitor	150P	50V	K セラコン（B）
C143	Mylar Capacitor	0.0100	50V	K マイラーコン
C144	Mylar Capacitor	0.0100	50V	K マイラーコン

● PU100P Circuit Board Resistors

R001	Carbon Resistor	18.0K 1/6 J	カーボン抵抗
R002	Carbon Resistor	22.0K 1/6 J	カーボン抵抗
R003	Carbon Resistor	100.0K 1/6 J	カーボン抵抗
R004	Carbon Resistor	22.0K 1/6 J	カーボン抵抗
R005	Carbon Resistor	390.0K 1/6 J	カーボン抵抗
R006	Carbon Resistor	4.7K 1/6 J	カーボン抵抗
R007	Carbon Resistor	1.2K 1/6 J	カーボン抵抗
R008	Carbon Resistor	47.0K 1/6 J	カーボン抵抗
R009	Carbon Resistor	270.0 1/6 J	カーボン抵抗
R010	Carbon Resistor	47.0K 1/6 J	カーボン抵抗
R011	Carbon Resistor	1.5K 1/6 J	カーボン抵抗
R012	Carbon Resistor	47.0K 1/6 J	カーボン抵抗
R013	Carbon Resistor	47.0K 1/6 J	カーボン抵抗
R014	Carbon Resistor	3.3K 1/6 J	カーボン抵抗
R015	Carbon Resistor	47.0K 1/6 J	カーボン抵抗
R016	Carbon Resistor	4.7K 1/6 J	カーボン抵抗
R017	Carbon Resistor	47.0K 1/6 J	カーボン抵抗
R018	Carbon Resistor	4.7K 1/6 J	カーボン抵抗
R019	Carbon Resistor	2.2K 1/6 J	カーボン抵抗
R020	Carbon Resistor	47.0K 1/6 J	カーボン抵抗
R021	Carbon Resistor	3.3K 1/6 J	カーボン抵抗
R022	Carbon Resistor	10.0K 1/6 J	カーボン抵抗
R023	Carbon Resistor	560.0 1/6 J	カーボン抵抗
R026	Carbon Resistor	33.0K 1/6 J	カーボン抵抗
R027	Carbon Resistor	47.0K 1/6 J	カーボン抵抗
R028	Carbon Resistor	18.0K 1/6 J	カーボン抵抗
R029	Carbon Resistor	22.0K 1/6 J	カーボン抵抗
R030	Carbon Resistor	100.0K 1/6 J	カーボン抵抗
R031	Carbon Resistor	22.0K 1/6 J	カーボン抵抗
R032	Carbon Resistor	390.0K 1/6 J	カーボン抵抗
R033	Carbon Resistor	4.7K 1/6 J	カーボン抵抗
R034	Carbon Resistor	1.2K 1/6 J	カーボン抵抗
R035	Carbon Resistor	47.0K 1/6 J	カーボン抵抗
R036	Carbon Resistor	270.0 1/6 J	カーボン抵抗
R037	Carbon Resistor	47.0K 1/6 J	カーボン抵抗
R038	Carbon Resistor	1.5K 1/6 J	カーボン抵抗
R039	Carbon Resistor	47.0K 1/6 J	カーボン抵抗
R040	Carbon Resistor	47.0K 1/6 J	カーボン抵抗
R041	Carbon Resistor	3.3K 1/6 J	カーボン抵抗
R042	Carbon Resistor	47.0K 1/6 J	カーボン抵抗
R043	Carbon Resistor	4.7K 1/6 J	カーボン抵抗
R044	Carbon Resistor	47.0K 1/6 J	カーボン抵抗
R045	Carbon Resistor	4.7K 1/6 J	カーボン抵抗
R046	Carbon Resistor	2.2K 1/6 J	カーボン抵抗
R047	Carbon Resistor	47.0K 1/6 J	カーボン抵抗
R048	Carbon Resistor	3.3K 1/6 J	カーボン抵抗
R049	Carbon Resistor	10.0K 1/6 J	カーボン抵抗
R050	Carbon Resistor	560.0 1/6 J	カーボン抵抗
R053	Carbon Resistor	10.0K 1/6 J	カーボン抵抗
R054	Carbon Resistor	1.0K 1/6 J	カーボン抵抗
R055	Carbon Resistor	33.0K 1/6 J	カーボン抵抗
R056	Carbon Resistor	47.0K 1/6 J	カーボン抵抗
R057	Carbon Resistor	1.0K 1/6 J	カーボン抵抗
R058	Carbon Resistor	1.0K 1/6 J	カーボン抵抗
R059	Carbon Resistor	18.0K 1/6 J	カーボン抵抗
R060	Carbon Resistor	18.0K 1/6 J	カーボン抵抗
R061	Carbon Resistor	100.0 1/6 J	カーボン抵抗
R062	Carbon Resistor	100.0 1/6 J	カーボン抵抗
R063	Carbon Resistor	68.0 1/2 J	カーボン抵抗
R064	Carbon Resistor	68.0 1/2 J	カーボン抵抗
R065	Carbon Resistor	1.0K 1/6 J	カーボン抵抗
R066	Carbon Resistor	4.7K 1/6 J	カーボン抵抗
R067	Carbon Resistor	47.0K 1/6 J	カーボン抵抗
R068	Carbon Resistor	1.0K 1/6 J	カーボン抵抗
R069	Carbon Resistor	2.7K 1/6 J	カーボン抵抗
R070	Carbon Resistor	47.0K 1/6 J	カーボン抵抗
R071	Carbon Resistor	1.5K 1/6 J	カーボン抵抗
R072	Carbon Resistor	47.0K 1/6 J	カーボン抵抗
R073	Carbon Resistor	47.0K 1/6 J	カーボン抵抗
R074	Carbon Resistor	470.0 1/6 J	カーボン抵抗
R075	Carbon Resistor	3.9K 1/6 J	カーボン抵抗
R076	Carbon Resistor	47.0K 1/6 J	カーボン抵抗
R077	Carbon Resistor	47.0K 1/6 J	カーボン抵抗
R078	Carbon Resistor	3.3K 1/6 J	カーボン抵抗
R081	Carbon Resistor	3.3K 1/6 J	カーボン抵抗
R082	Carbon Resistor	10.0K 1/6 J	カーボン抵抗
R083	Carbon Resistor	68.0K 1/6 J	カーボン抵抗
R084	Carbon Resistor	8.2K 1/6 J	カーボン抵抗
R085	Carbon Resistor	560.0 1/6 J	カーボン抵抗
R086	Carbon Resistor	1.5K 1/6 J	カーボン抵抗
R087	Carbon Resistor	4.7K 1/6 J	カーボン抵抗
R088	Carbon Resistor	47.0K 1/6 J	カーボン抵抗
R089	Carbon Resistor	1.0K 1/6 J	カーボン抵抗
R090	Carbon Resistor	2.7K 1/6 J	カーボン抵抗
R091	Carbon Resistor	47.0K 1/6 J	カーボン抵抗
R092	Carbon Resistor	1.5K 1/6 J	カーボン抵抗
R093	Carbon Resistor	47.0K 1/6 J	カーボン抵抗
R094	Carbon Resistor	47.0K 1/6 J	カーボン抵抗
R095	Carbon Resistor	470.0 1/6 J	カーボン抵抗
R096	Carbon Resistor	3.9K 1/6 J	カーボン抵抗
R097	Carbon Resistor	47.0K 1/6 J	カーボン抵抗
R098	Carbon Resistor	47.0K 1/6 J	カーボン抵抗
R099	Carbon Resistor	3.3K 1/6 J	カーボン抵抗
R102	Carbon Resistor	3.3K 1/6 J	カーボン抵抗
R103	Carbon Resistor	10.0K 1/6 J	カーボン抵抗
R104	Carbon Resistor	68.0K 1/6 J	カーボン抵抗
R105	Carbon Resistor	8.2K 1/6 J	カーボン抵抗
R106	Carbon Resistor	560.0 1/6 J	カーボン抵抗
R107	Carbon Resistor	1.5K 1/6 J	カーボン抵抗
R108	Carbon Resistor	330.0 1/6 J	カーボン抵抗
R109	Carbon Resistor	330.0 1/6 J	カーボン抵抗

Clavinova®

CLP-760

PARTS LIST

Notes DESTINATION ABBREVIATIONS

J : Japanese model	A : Australian model
U : U.S. model	E : European model
C : Canadian model	D : West German model
X : General model	B : British model
M : South African model	I : Indonesian model
H : North European model	

■ELECTRICAL PARTS（電気部品）

	Ref. No.	Part No.	Description		部品名	Remarks	ランク
*		VJ101800	Circuit Board	DM	DMシート	CLP760	81
*		NX004900	Circuit Board	PN	PNシート		12
		VF710500	Circuit Board	HP	HPシート		07
*		NX004910	Circuit Board	JACK1/2	JACK1/2シート		08
*		NX004920	Circuit Board	JACK2/2	JACK2/2シート		08
*		VJ101400	Circuit Board	PU100P	PU100Pシート		21
*		VJ539300	Circuit Board Assembly	PU100M	PU100Mシート Ass'y	J,X,M	25
*		VJ539400	Circuit Board Assembly	PU100M	PU100Mシート Ass'y	U,C	25
*		VJ539500	Circuit Board Assembly	PU100M	PU100Mシート Ass'y	H,B,A	25
*		VJ539800	Circuit Board	PU100M	PU100Mシート	J,X,M	21
*		VJ101500	Circuit Board	PU100M	PU100Mシート	U,C	21
*		VJ101600	Circuit Board	PU100M	PU100Mシート	H,B,A	21
		VC796500	Circuit Board	AE88L	AE88Lシート		09
		VC796300	Circuit Board	AE-C	AE-Cシート		10
		VC796600	Circuit Board	AE88H	AE88Hシート		08
*		VJ101800	Circuit Board	DM	DMシート		81
		XA778001	IC	NJM072S	IC	OP AMP.	03
		XB247001	IC	μPC4570HA	IC	OP AMP.	03
		IR000250	IC	SN74HC02N	IC	NOR	03
		IR013250	IC	SN74HC132N	IC	NAND	03
		IR013850	IC	SN74HC138N	IC	DECODER-3	05
		IR013950	IC	SN74HC139N	IC	DECODER-2	05
		IR024550	IC	SN74HC245N	IC	TRANSCEIVER	06
		IR036550	IC	SN74HC365N	IC	BUS DRIVER	03
*		XH645A00	IC	HD6435328ZA17F	IC	CPU (H8/532)	
		XC628A00	IC	TC51832PL-10	IC	256K PSRAM	09
		XF876A00	IC	LH5164D-10L	IC	64K SRAM	08
*		XH628A00	IC	PARAMETER	IC	ROM 4M	11
*		XH629A00	IC	WAVE-1	IC	ROM 4M	11
*		XH630A00	IC	WAVE-2	IC	ROM 4M	11
*		XH631A00	IC	WAVE-3	IC	ROM 4M	11
*		XH632A00	IC	WAVE-4	IC	ROM 4M	11
*		XH633A00	IC	WAVE-5	IC	ROM 4M	11
*		XH634A00	IC	WAVE-6	IC	ROM 4M	11
*		XH635A00	IC	WAVE-7	IC	ROM 4M	11
*		XH636A00	IC	WAVE-8	IC	ROM 4M	11
*		XH637A00	IC	WAVE-9	IC	ROM 4M	11
*		XH638A00	IC	WAVE-10	IC	ROM 4M	11
*		XH639A00	IC	WAVE-11	IC	ROM 4M	11
*		XH640A00	IC	WAVE-12	IC	ROM 4M	11
*		XH641A00	IC	WAVE-13	IC	ROM 4M	11
*		XH642A00	IC	WAVE-14	IC	ROM 4M	11
*		XH643A00	IC	WAVE-15	IC	ROM 4M	11
*		XH644A00	IC	WAVE-16	IC	ROM 4M	11
		XA798001	IC	YM3808	IC	MIX	09
		XE449A00	IC	YM3413	IC	LDSP	10
		XF237A00	IC	YM3029	IC	AFDO	09
		XF371A00	IC	AD1856	IC	DAC	07
		XG995A00	IC	YM7119	IC	M3	18
*		XH543A00	IC	YM6633	IC	KSN	09
		VD473200	Photo Coupler	6N137	フォトカプラ		05
		IA101550	Transistor	2SA1015 O,Y	トランジスタ		01
		IC174070	Transistor	2SC1740S R,S	トランジスタ		01
		VF519600	Transistor Array	TD62703P	トランジスタアレイ		03
		VH441500	Transistor Array	MC1413P	トランジスタアレイ		03
		IF003450	Diode	1SS133	ダイオード		01
		VA007600	Zener Diode	MTZ5.6B 5.6V	ツェナーダイオード		01
		VE443500	Resistor Array	RGLD4X103J	抵抗アレイ		01
		VE445200	Resistor Array	RGLD8X103J	抵抗アレイ		01
*		VJ252800	Resistor Array	RGLD5X103J	抵抗アレイ		01
		VB593200	Trimmer Pot.	B100K	半固定ボリュウム		01
		FZ004110	Semiconductive Cera. Cap.	0.1μF 16V Z	半導体セラコン		01
*		VI055000	Super Capacitor	0.1F 5.5V FYD0H	スーパーキャパシター		04
		GE901870	Coil	10μH SN3-205	コイル		03
		VB835000	Coil	20μH FL5R200QNT	コイル		01
		VD473700	Coil	60μH SBT-0460T	コイル		01
		VF968800	Coil	60μH SBT0260TF	コイル		01
*		VI653000	Ceramic Resonator	CST4.00MGW040	セラミック振動子		01
		VH949900	Quartz Crystal Unit	6.144M AT-49	水晶振動子		03
		VI927300	Quartz Crystal Unit	20M AT-49	水晶振動子		03
		GE300610	Ferrite Bead	BL02RN1-R62T4	フェライトビーズ		01
		GE300670	Ferrite Bead	BL02RN2-R62T4	フェライトビーズ		02
*		NX004900	Circuit Board	PN	PNシート		12
		IF003450	Diode	1SS133	ダイオード		01
		VD180000	LED	SLZ-190B-03 RE	LED		01
*		VK369000	Slide Pot.	A10K×2	二連スライドVR	MASTER VOLUME	
*		VJ290600	Slide Pot.	B10K RS15111C	スライドボリュウム		03

* New Parts（新規部品）

ランク：Japan only

	Ref. No.	Part No.	Description		部品名	Remarks	ランク
		KA906550	Push Switch	KEC10901	プッシュスイッチ		02
		VF710500	Circuit Board	HP	HPシート		07
		FZ004110	Semiconductive Cera. Cap.	0.1μF 16V Z	半導体セラコン		01
		VB971100	Coil	20μFFL5R200QN	コイル		01
		LB101870	Phone Jack	YKB21-5006	ホーンジャック	PHONES	03
*		NX004910	Circuit Board	JACK1/2	JACK1/2シート		08
*		NX004920	Circuit Board	JACK2/2	JACK2/2シート		08
		VF968800	Coil	60μHSBT0260TF	コイル		01
		VF456600	Coil	80μSBT-0180W	コイル		03
		VB312500	DIN Jack	5P YKF51-50	DINジャック	MIDI	02
		LB202330	Phone Jack	HLJ0521	ホーンジャック	AUX OUT	02
		VI145300	Pin Jack	YKC21-0188	ピンジャック	OPTIONAL	01
*		VJ101400	Circuit Board	PU100P	PU100Pシート		21
		XB247001	IC	μPC4570HA	IC	OP AMP.	03
		XB419001	IC	M5216L	IC	OP AMP. 2CH	03
*		XG203A00	IC	M5229P	IC	G.EQUALIZER	04
		IG151600	IC	LA4500	IC	P AMP.	05
		IC181530	Transistor	2SC1815 GR	トランジスタ		01
		IF003450	Diode	1SS133	ダイオード		01
		UJ749100	Electrolytic Cap.	1000μF 25V	ケミコン		02
		FZ004110	Semiconductive Cera. Cap.	0.1μF 16V Z	半導体セラコン		01
		KC001900	Relay	DC RY12W	リレー	12V	07
		KC001940	Relay	DC DH24D20T(M)	リレー	24V	05
		GE300670	Ferrite Bead	BL02RN2-R62T4	フェライトビーズ		02
		EJ030106	Pan Head Tapping Screw	3.0X10 ZMC2Y	ナベタッピングネジ		01
*		VJ539300	Circuit Board Assembly	PU100M	PU100MシートAss'y	J,X,M	25
*		VJ539400	Circuit Board Assembly	PU100M	PU100MシートAss'y	U,C	25
*		VJ539500	Circuit Board Assembly	PU100M	PU100MシートAss'y	H,B,A	25
*		VJ539800	Circuit Board	PU100M	PU100Mシート	J,X,M	21
*		VJ101500	Circuit Board	PU100M	PU100Mシート	U,C	21
*		VJ101600	Circuit Board	PU100M	PU100Mシート	H,B,A	21
		XC719001	IC	NJM7805FA	IC	5V REGULATOR	03
		XB249001	IC	NJM78M12A	IC	12V REGULATOR	03
		XD343A00	IC	NJM79M12FA	IC	-12V REGULATOR	03
		XB029001	IC	STK4191-5	IC	50W 2CH	10
		XB247001	IC	μPC4570HA	IC	OP AMP.	03
		IC181530	Transistor	2SC1815 GR	トランジスタ		01
		VB481900	Diode	11ES4	ダイオード		01
		IH001790	Diode Stack	4D4B42 3A 200V	ダイオードスタック		04
		VB493200	Diode Stack	1D2C1 2A 200V	ダイオードスタック		01
		VB493300	Diode Stack	1D2Z1 2A 200V	ダイオードスタック		01
		VC742500	Metal Oxide Film Resistor	10Ω 1W	酸化金属皮膜抵抗		01
		VC761000	Metal Oxide Film Resistor	680Ω 2W	酸化金属皮膜抵抗		01
		VC751900	Metal Oxide Film Resistor	0.22Ω 2W	酸化金属皮膜抵抗		01
		HW095100	Fuse Resistor	100Ω 1/4	ヒューズ抵抗		01
*		UJ739680	Electrolytic Cap.	6800μF 16V	ケミコン		
		UI949220	Electrolytic Cap.	2200μF 25V	ケミコン		03
		UI969220	Electrolytic Cap.	2200μF 50V	ケミコン		03
*		UJ749470	Electrolytic Cap.	4700μF 25V	ケミコン		03
		FI384100	Ceramic Cap.	0.01μF 400V	規格認定コン		01
		FI494100	Ceramic Cap.	0.01μF 400V	規格認定コン		01
		FZ007280	Semiconductive Cera. Cap.	0.1μF 50V	半導体セラコン		01
		VD293400	Coil	10μHSU10V20010	コイル		03
		VF790900	Coil	10μSU10VD20010	コイル		03
		GD900470	Coil	RZ-001 1.5UH	空芯コイル		01
		KC001940	Relay	DC DH24D2-0T(M)	リレー	24V	05
		KB000360	Fuse	T3.0A 250V	ヒューズ	J,X,M	01
		KB000430	Fuse	T1.25A 250V	ヒューズ	J,X,M	01
		KB000350	Fuse	T2.00A 250V	ヒューズ	J,X,M	01
		KB002650	Fuse	T3.0A 250V	ヒューズ	U,C	03
		KB001450	Fuse	T1.25A 250V	ヒューズ	U,C	01
		KB001240	Fuse	T2.00A 250V	ヒューズ	U,C	03
		KB002620	Fuse	T1.6A 250V	ヒューズ	H,B,A	02
		KB000680	Fuse	T1.25A 250V	ヒューズ	H,B,A	02
		KB000750	Fuse	T2.00A 250V	ヒューズ	H,B,A	02
		LB201530	Fuse Holder	PC-FH1	ヒューズホルダ		01
		VC796500	Circuit Board	AE88L	AE88Lシート		09
		IF003450	Diode	1SS133	ダイオード		01
		VC796300	Circuit Board	AE-C	AE-Cシート		10
		IF003450	Diode	1SS133	ダイオード		01
		VC796600	Circuit Board	AE88H	AE88Hシート		08

* New Parts (新規部品)

ランク：Japan only

Ref. No.	Part No.	Description		部品名	Remarks	ランク
	IF003450	Diode	1SS133	ダイオード		01
	XG237B00	Power Transformer		電源トランス	J,U,C	18
	XG239A00	Power Transformer		電源トランス	X,M,A	18
	XG238A00	Power Transformer		電源トランス	H,B	18
	LB202280	Voltage Selector	HXW0131-01-910	電圧切替器	X,M,A	03
	VF726700	AC Cord	3.0A 125V	電源コード	J	06
	VG237200	AC Cord	6.0A 250V	電源コード	X	06
	VI032100	AC Cord		電源コード	U,C	07
	VG237100	AC Cord	6.0A 250V	電源コード	M	06
	VG236800	AC Cord	1.0A 250V	電源コード	H	06
	VI238000	AC Cord	5.0A	電源コード	B	10
	VG237000	AC Cord	2.5A 250V	電源コード	A	07
	VC843500	Push Switch	SDDLB1	プッシュスイッチ	POWER	03
*	VJ194500	Stacked Wire, PK1		PK1束線		06
*	VJ194800	Stacked Wire, PK2		PK2束線		08
	VD947800	Data Line Filter	ESD-R-25D-B	データラインフィルタ		05
*	VJ190600	Stacked Wire, SP1		SP束線1		06
*	VJ194900	Stacked Wire, SP2		SP束線2		06
*	XH757A00	Speaker	6.5X13 8Ω 12W	スピーカー	MONITOR	08
	XG344A00	Speaker	5cm 16Ω 60W	スピーカー	TWEETER	08
	XG345A00	Speaker	16cm 8Ω 50W	スピーカー	WOOFER	12

* New Parts (新規部品)

ランク : Japan only

■ OVERALL ASSEMBLY（総組立）

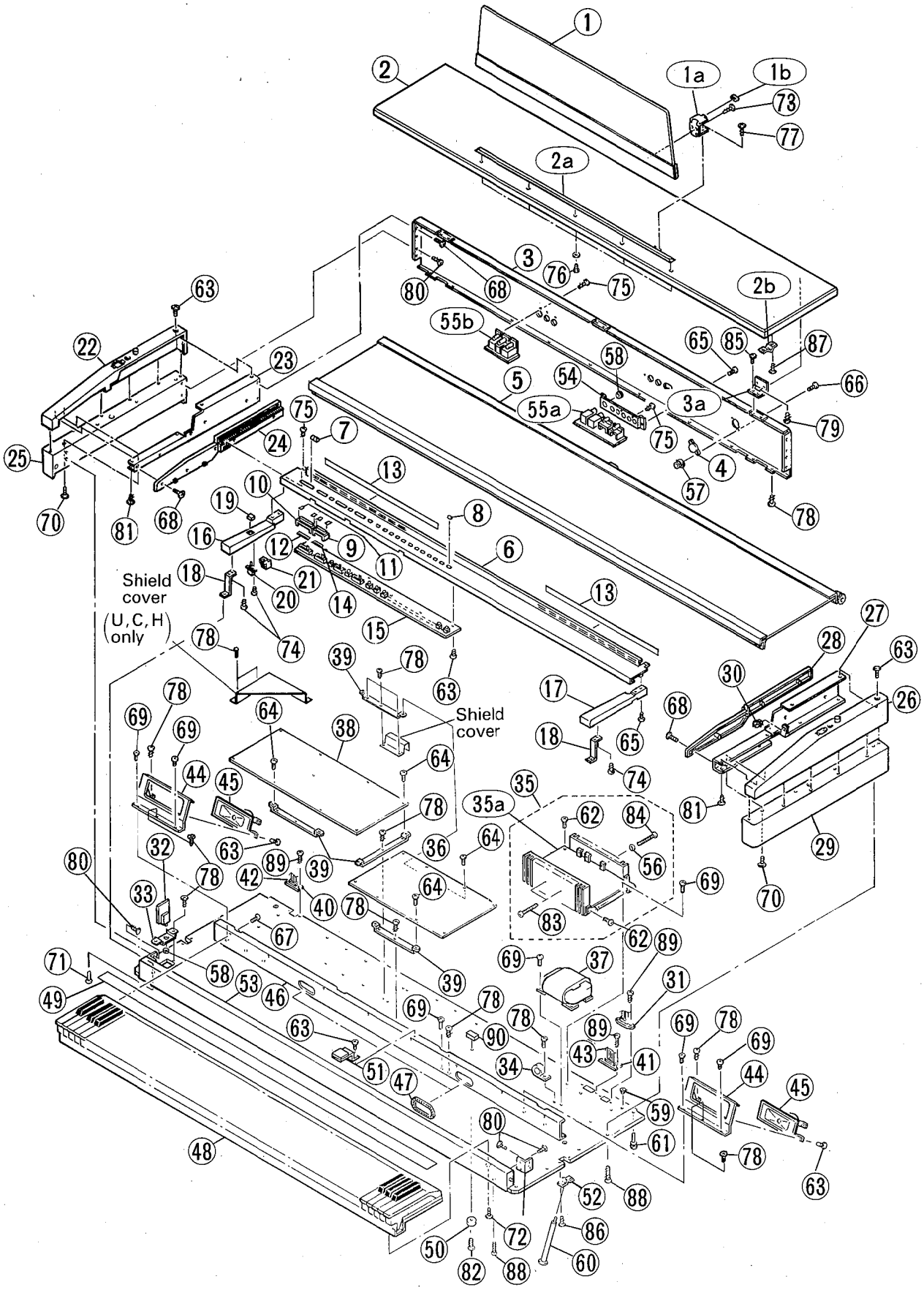

	Ref. No.	Part No.	Description		部品名	Remarks	ランク
	1	VH675600	Music Rest Assembly		譜面板Ass'y	CLP760	16
	1a	VD255900	Hinge		譜面板蝶番		05
	1b	CB054920	Cap	BL	キャップ		01
	2	VH670700	Top Board Assembly		屋根Ass'y		30
	2a	VH375300	Rail,Music Stopper		譜面止めレール		06
	2b	VH662400	Support, Top Board	Upper	屋根固定板 上		02
*	3	VJ373000	Back Top Board Assembly		背面框Ass'y	J,U,C,H,B	16
*	3	VJ373100	Back Top Board Assembly		背面框Ass'y	X,M,A	16
	3a	VH662600	Hinge		蝶番		03
	4	LB202280	Voltage Selector	HXW0131-01-910	電圧切替器	X,M,A	03
	5	VH676300	Slide Cover Assembly		スライド蓋Ass'y		25
*	6	VJ396800	Control Panel		コントロールパネル		14
	7	CB059250	Slide Knob	BL-YE	スライドツマミ	4pcs.	01
	8	CB059240	Push Knob	BL	プッシュツマミ	15pcs.	01
*	9	VJ334400	Escutcheon	BL	エスカッション		01
	10	VD135000	Escutcheon	BL	エスカッション		01
	11	VD214900	Spacer-S		防振スペーサーS		01
	12	CA016330	Dust Proof Cloth		防塵クロス		01
	13	VF852600	Dust Proof Cloth	400X25	防塵クロス		01
*	14	VJ439300	Dust Proof Cloth		防塵クロス		01
*	15	NX004900	Circuit Board	PN	PNシート		12
	16	VH668200	End Block	Left	拍子木(左)		06
	17	VH668300	End Block	Right	拍子木(右)		06
	18	VH661800	Angle Bracket, End Block		拍子木固定金具		01
	19	VF663400	Push Knob	BL	プッシュツマミ	POWER	01
	20	VC843500	Push Switch	SDDLB1	プッシュスイッチ	POWER	03
	21	CB049980	Switch Cover	BL	パワースイッチカバー		01
	22	VH668500	Side Cover	Left-Upper	腕木 上(左)		08
	23	VH662800	Support, Side Cover	Left	腕木補強金具(左)		05
	24	VH741900	Inner Side Cap	Left	山板(左)		07
	25	VH673100	Side Cover	Left-Lower	腕木 下(左)		14
	26	VH668600	Side Cover	Right-Upper	腕木 上(右)		08
	27	VH662900	Support, Side Cover	Right	腕木補強金具(右)		05
	28	VH742000	Inner Side Cap	Right	山板(右)		07
	29	VH690100	Side Cover	Right-Lower	腕木 下(右)		14
	30	VD185500	Rod Holder		ロッドホルダー		01
	31	VF139800	AC Connector	SOT-15	電源コネクター	AC INLET	03
	32	VF710500	Circuit Board	HP	HPシート		07
	33	VH662000	Plate, HPJ		HPJ取付板		01
	34	VD947800	Data Line Filter	ESD-R-25D-B	データラインフィルタ		05
*	35	VJ539300	Circuit Board Assembly	PU100M	PU100MシートAss'y	J,X,M	25
* *	35	VJ539400	Circuit Board Assembly	PU100M	PU100MシートAss'y	U,C	25
* *	35	VJ539500	Circuit Board Assembly	PU100M	PU100MシートAss'y	H,B,A	25
*	35a	VJ539800	Circuit Board	PU100M	PU1000Mシート	J,X,M	21
*	35a	VJ101500	Circuit Board	PU100M	PU1000Mシート	U,C	21
* *	35a	VJ101600	Circuit Board	PU100M	PU1000Mシート	H,B,A	21
* *	36	VJ101400	Circuit Board	PU100P	PU1000Pシート		21
	37	XG237B00	Power Transformer		電源トランス	J,U,C	18
	37	XG239A00	Power Transformer		電源トランス	X,M,A	18
	37	XG238A00	Power Transformer		電源トランス	H,B	18
*	38	VJ101800	Circuit Board	DM	DMシート		81
* *	39	VJ335200	Angle Bracket, DM		DMシート固定金具		02
* *	40	VH350100	Connector Panel, PK		コネクターパネル		
* *	41	VJ420800	Connector Panel, SP		コネクターパネル		01
* *	42	VJ194500	Stacked Wire, PK1		PK1束線		06
* *	43	VJ190600	Stacked Wire, SP1		SP束線1		06
* *	44	VJ421400	Angle Bracket, Buffle		バッフル金具		07
* *	45	XH757A00	Speaker	6.5X13 8Ω 12W	スピーカー	MONITOR	08
	46	VD526300	Angle Bracket, Keyboard		反り止め金具		07
	47	VD521600	Bushing		自在ブッシュ		01
	48	VC530600	Keyboard Assembly	A88 K6	AE鍵盤Ass'y		70
	49	VD401700	Felt	1226X40X1 RE	フェルト		03
	50	CB801270	Foot	BL	ゴム足		01
*	51	VI574000	Support Assembly, Panel		パネル受け金具Ass'y		03
	52	VH662500	Support, Top Board	Lower	屋根固定板 下		01
	53	VH670600	Front Rail Assembly		口棒Ass'y		13
	53a	AA009170	Angle Brack, Front Rail		アングル		01
*	54	VJ423000	Jack Holder		ジャック取付金具		03
	55a	NX004910	Circuit Board	JACK1/2	JACK1/2シート		08
	55b	NX004920	Circuit Board	JACK2/2	JACK2/2シート		08
	56	EX000390	Flat Washer	3X8X0.5 ZMC2Y	平座金みがき丸		01
	57	EV190300	Hexagonal Nut	φ3.0 ZMC2Y	フランジ付六角ナット	X,M,A	01
	58	ET400040	Nut	12X14X2 FCM3BL	管用ナット		01
	59	VD986100	Nut	M6X10.5 ZMC2Y	鬼目ナット		01
	60	VD134200	Screw		段付ネジ		02
	61	VG297600	Guide Screw	4.0X14	ガイドスクリュー		01
	62	ED030066	Bind Head Screw	3.0X6 ZMC2Y	バインド小ネジ		01
	63	ED330066	Bind Head Screw	3.0X6 FCM3BL	バインド小ネジ		01
	64	ED030086	Bind Head Screw	3.0X8 ZMC2Y	バインド小ネジ		01

* New Parts (新規部品)

ランク：Japan only

Ref. No.	Part No.	Description			部品名	Remarks	ランク
65	ED330086	Bind Head Screw	3.0X8	FCM3BL	バインド小ネジ		01
66	ED330106	Bind Head Screw	3.0X10	FCM3BL	バインド小ネジ	X,M,A	01
67	ED340066	Bind Head Screw	4.0X6	FCM3BL	バインド小ネジ		01
68	ED040066	Bind Head Screw	4.0X8	ZMC2Y	バインド小ネジ		01
69	ED040146	Bind Head Screw	4.0X14	ZMC2Y	バインド小ネジ		01
70	ED040166	Bind Head Screw	4.0X16	ZMC2Y	バインド小ネジ		01
71	ED340186	Bind Head Screw	4.0X18	ZMC2BL	バインド小ネジ		01
72	ED350206	Bind Head Screw	5.0X20	FCM3BL	バインド小ネジ		01
73	EI330066	Bind Head Tapping Screw	3.0X6	FCM3BL	ﾊﾞｲﾝﾄﾞﾀｯﾋﾟﾝｸﾞﾈｼﾞ		01
74	EI030086	Bind Heas Tapping Screw	3.0X8	ZMC2Y	ﾊﾞｲﾝﾄﾞﾀｯﾋﾟﾝｸﾞﾈｼﾞ		01
75	EI330086	Bind Head Tapping Screw	3.0X8	FCM3BL	ﾊﾞｲﾝﾄﾞﾀｯﾋﾟﾝｸﾞﾈｼﾞ		01
76	EI030146	Bind Head Tapping Screw	3.0X14	ZMC2Y	ﾊﾞｲﾝﾄﾞﾀｯﾋﾟﾝｸﾞﾈｼﾞ		01
77	EI330166	Bind Head Tapping Screw	3.0X16	FCM3BL	ﾊﾞｲﾝﾄﾞﾀｯﾋﾟﾝｸﾞﾈｼﾞ		01
78	EI035126	Bind Head Tapping Screw	3.5X12	FCM3BL	ﾊﾞｲﾝﾄﾞﾀｯﾋﾟﾝｸﾞﾈｼﾞ		01
79	EI335146	Bind Head Tapping Screw	3.5X14	FCM3BL	ﾊﾞｲﾝﾄﾞﾀｯﾋﾟﾝｸﾞﾈｼﾞ		01
80	EI035166	Bind Head Tapping Screw	3.5X16	ZMC2Y	ﾊﾞｲﾝﾄﾞﾀｯﾋﾟﾝｸﾞﾈｼﾞ		01
81	EI040086	Bind Head Tapping Screw	4.0X8	ZMC2Y	ﾊﾞｲﾝﾄﾞﾀｯﾋﾟﾝｸﾞﾈｼﾞ		01
82	EI040146	Bind Head Tapping Screw	4.0X14	ZMC2Y	ﾊﾞｲﾝﾄﾞﾀｯﾋﾟﾝｸﾞﾈｼﾞ		01
83	EA030206	Pan Head Screw	3.0X20	ZMC2Y	ナベ小ネジ		01
84	EA030306	Pan Head Screw	3.0X30	ZMC2Y	ナベ小ネジ		01
85	EY980150	Pan Head Screw	4.0X8	ZMC2Y	ナベ小ネジ		01
86	E0035146	Flat Head Tapping Screw	3.5X10	ZMC2Y	皿タッピングネジ		01
87	E0335146	Flat Head Tapping Screw	3.5X14	FCM3BL	皿タッピングネジ		01
88	E0040256	Flat Head Tapping Screw	4.0X25	ZMC2Y	皿タッピングネジ		01
89	EI030126	Bind Head Tapping Screw	3.0X12	ZMC2Y	ﾊﾞｲﾝﾄﾞﾀｯﾋﾟﾝｸﾞﾈｼﾞ		01
90	VG676300	Anti Crack Rubber			アンチクラックゴム		01

※New Parts（新規部品）

ランク：Japan only

■ SPEAKER BOX & STAND ASSEMBLY（スピーカーボックス＆スタンドAss'y）

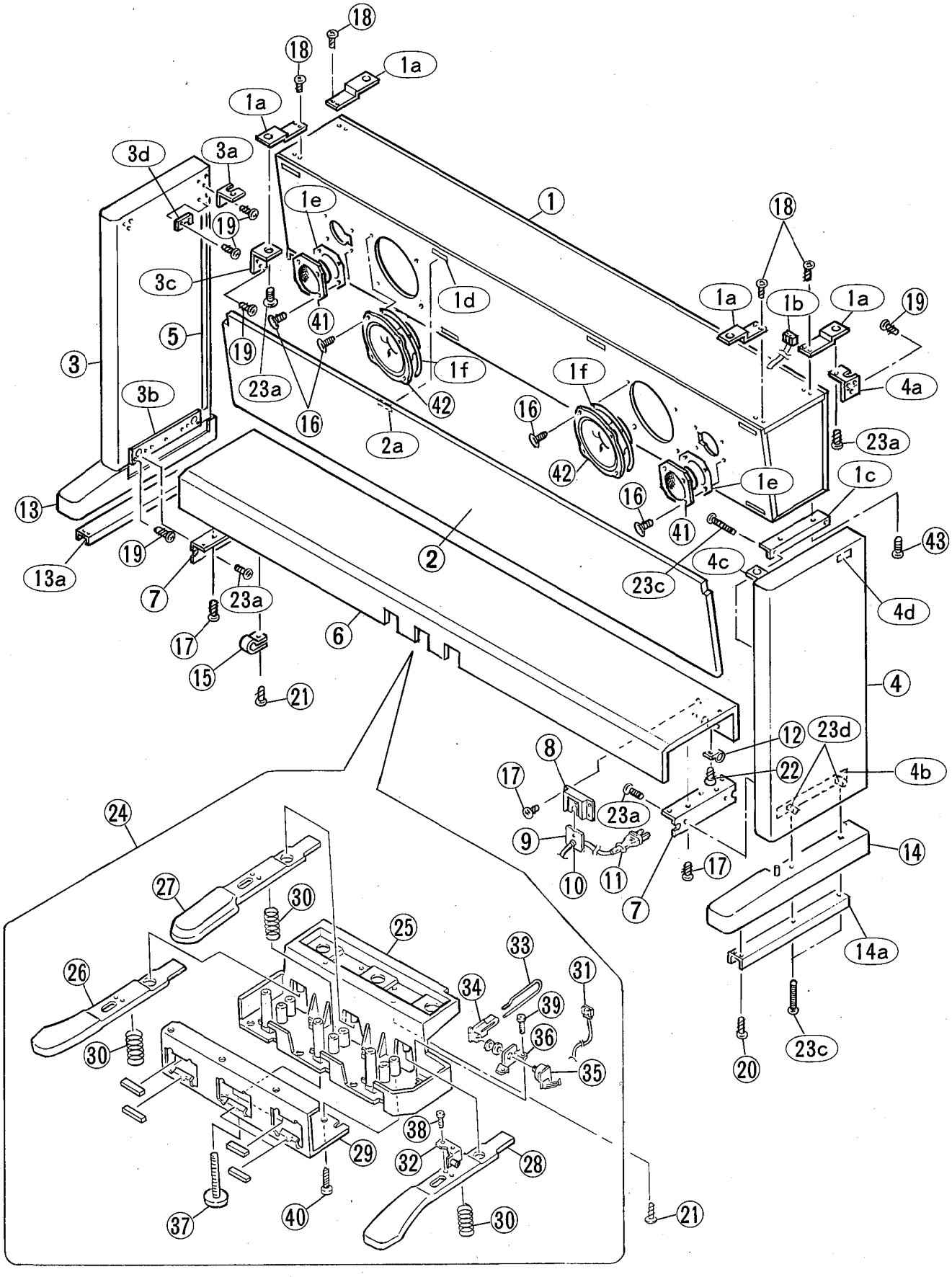

	Ref. No.	Part No.	Description		部品名	Remarks	ランク
			Stand Assembly		スタンドAss'y	CLP760	
*	1	VJ367100	Speaker Box Assembly		ｽﾋﾟｰｶｰﾎﾞｯｸｽAss'y	J CLP760	25
*	1	VJ385000	Speaker Box Assembly		ｽﾋﾟｰｶｰﾎﾞｯｸｽAss'y	X,M,U,C,H,B,A	26
	1a	VB128200	Angle Bracket		取付金具		01
*	1b	VJ194900	Stacked Wire, SP2		SP束線2		06
	1c	VH666000	Angle, Speaker Box		SP固定金具		03
*	1d	VI785400	Dual Lock	50X16	マジックテープ		01
	1e	VG759400	Packing		パッキン		01
*	1f	VH519000	Packing	(A)	パッキン		03
*	2	VJ385200	Front Board Assembly		前板Ass'y		11
*	2a	VI785300	Dual Lock	50X16	マジックテープ		01
*	3	VJ385300	Side Board Assembly	Left	側板Ass'y (左)		16
	3a	VB130200	Angle Bracket	Left	受け金具 (左)		01
	3b	VH663000	Angle Bracket, Pedal Box		ﾍﾟﾀﾞﾙﾎﾞｯｸｽ取付金具		04
	3c	VA880600	Angle		アングル		02
	3d	VH689900	Rail Cover		レールカバー		01
*	4	VJ385400	Side Board Assembly	Right	側板Ass'y		16
	4a	VB130100	Angle Bracket	Right	受け金具 (右)		01
	4b	VH663000	Angle Bracket, Pedal Box		ﾍﾟﾀﾞﾙﾎﾞｯｸｽ取付金具		04
	4c	VA880600	Angle		アングル		02
	4d	VH689900	Rail Cover		レールカバー		01
	5	VC933300	Cap	BL	キャップ		03
*	6	VJ422800	Pedal Box		ペダルボックス	J	16
*	6	VJ422900	Pedal Box		ペダルボックス	X,M,U,C,H,B,A	16
	7	VH662700	Angle Bracket, Pedal		ペダル固定金具		03
	8	VF423100	Stopper Support, Cord	BL	ストッパーサポート		02
	9	VF422700	Angle Bracket, Cord		コードストッパー金具		01
	10	CB032840	Cord Strain Relief	SR-5N-4	コードストッパー	J,U,C,B	01
	10	CB072750	Cord Strain Relief	SR-4N-4	コードストッパー	X,M,H,A	01
	11	VF726700	AC Cord	3.0A 125V	電源コード	J	06
	11	VG237200	AC Cord	6.0A 250V	電源コード	X	06
	11	VI032100	AC Cord		電源コード	U,C	07
	11	VG237100	AC Cord	6.0A 250V	電源コード	M	06
	11	VG236800	AC Cord	1.0A 250V	電源コード	H	06
	11	VI238000	AC Cord	5.0A	電源コード	B	10
	11	VG237000	AC Cord	2.5A 250V	電源コード	A	07
	12	VF852500	UL Clamp	UL-13	ULクランプ		02
	13a	VA881100	Angle Bracket, Stand Base		妻土台金具		03
	14	VH676000	Stand Base Assembly	Right	妻土台Ass'y(右)		07
	14a	VA881100	Angle Bracket, Stand Base		妻土台金具		03
	15	CB065520	Nylon Clamp	NK-3N	ナイロンクランプ	J	01
	16	ED340166	Bind Head Screw	4.0X16 FCM3BL	バインド小ネジ		01
	17	EI035126	Bind Head Tapping Screw	3.5X12 ZMC2Y	ﾊﾞｲﾝﾄﾞﾀｯﾋﾟﾝｸﾞﾈｼﾞ		01
	18	EI330146	Bind Head Tapping Screw	3.5X14 ZMC2BL	ﾊﾞｲﾝﾄﾞﾀｯﾋﾟﾝｸﾞﾈｼﾞ		01
	19	EI335206	Bind Head Tapping Screw	3.5X20 FCM3BL	ﾊﾞｲﾝﾄﾞﾀｯﾋﾟﾝｸﾞﾈｼﾞ		01
	20	EI040106	Bind Head Tapping Screw	4.0X10 ZMC2Y	ﾊﾞｲﾝﾄﾞﾀｯﾋﾟﾝｸﾞﾈｼﾞ		01
	21	EI040146	Bind Head Tapping Screw	4.0X14 ZMC2Y	ﾊﾞｲﾝﾄﾞﾀｯﾋﾟﾝｸﾞﾈｼﾞ		01
	22	EI035106	Flat Head Tapping Screw	3.5X10 ZMC2Y	皿タッピングネジ		01
	23	VH724100	Screw Set		ネジセット		05
	23a	ED360146	Bind Head Screw	6.0X14 ZMC2BL	バインド小ネジ		02
	23b	ED360206	Bind Head Screw	6.0X20 ZMC2BL	バインド小ネジ		02
	23c	EA060700	Pan Head Screw	6.0X70 ZMC2Y	尖先ナベ小ネジ		01
	23d	ET400070	Joint Connector	6.0X13 ZMC2BL	ジョイントコネクター		01
*	24	VJ302500	Pedal Unit		ペダルユニット		19
	25	VF645700	Pedal Frame	BL	ペダルフレーム		05
	26	VH297900	Pedal	Left	ペダル (左)		07
	27	VH297200	Pedal	Center	ペダル (中)		07
	28	VH297100	Pedal	Right	ペダル (右)		07
	29	VF657700	Angle Bracket, Pedal		ペダル支持金具		04
	30	VF658100	Pedal Spring		ペダルバネ		01
*	31	VJ194800	Stacked Wire, PK2		PK2束線		08
	32	VI449500	Spacer Angle		スペーサーアングル		03
	33	AA104230	Spring		ワイヤーバネ		01
	34	CB059320	Holder,Wire	BL	ワイヤーホルダー		01
	35	HS412520	Variable Resistor	K161S0Z01	ロータリーVR1連		05
	36	VF657800	Angle Bracket, Volume		ボリューム取付金具		01
	37	VF851300	Adjuster		丸形アジャスター		01
	38	ED030066	Bind Head Screw	3.0X6 ZMC2Y	バインド小ネジ		01
	39	EI030106	Bind Head Tapping Screw	3.0X10 ZMC2Y	ﾊﾞｲﾝﾄﾞﾀｯﾋﾟﾝｸﾞﾈｼﾞ		01
	40	EI350256	Bind Head Tapping Screw	5.0X25 ZMC2BL	ナベタッピングネジ		02
	41	XG344A00	Speaker	5cm 16Ω 60W	スピーカー	TWEETER	08
	42	XG345A00	Speaker	16cm 8Ω 50W	スピーカー	WOOFER	12
*	43	VJ999500	Cup Screw	4.0X16 ZMC2BL	カップスクリュー		

* New Parts (新規部品)

ランク : Japan only

■ SLIDE COVER ASSEMBLY（スライド蓋Ass'y）

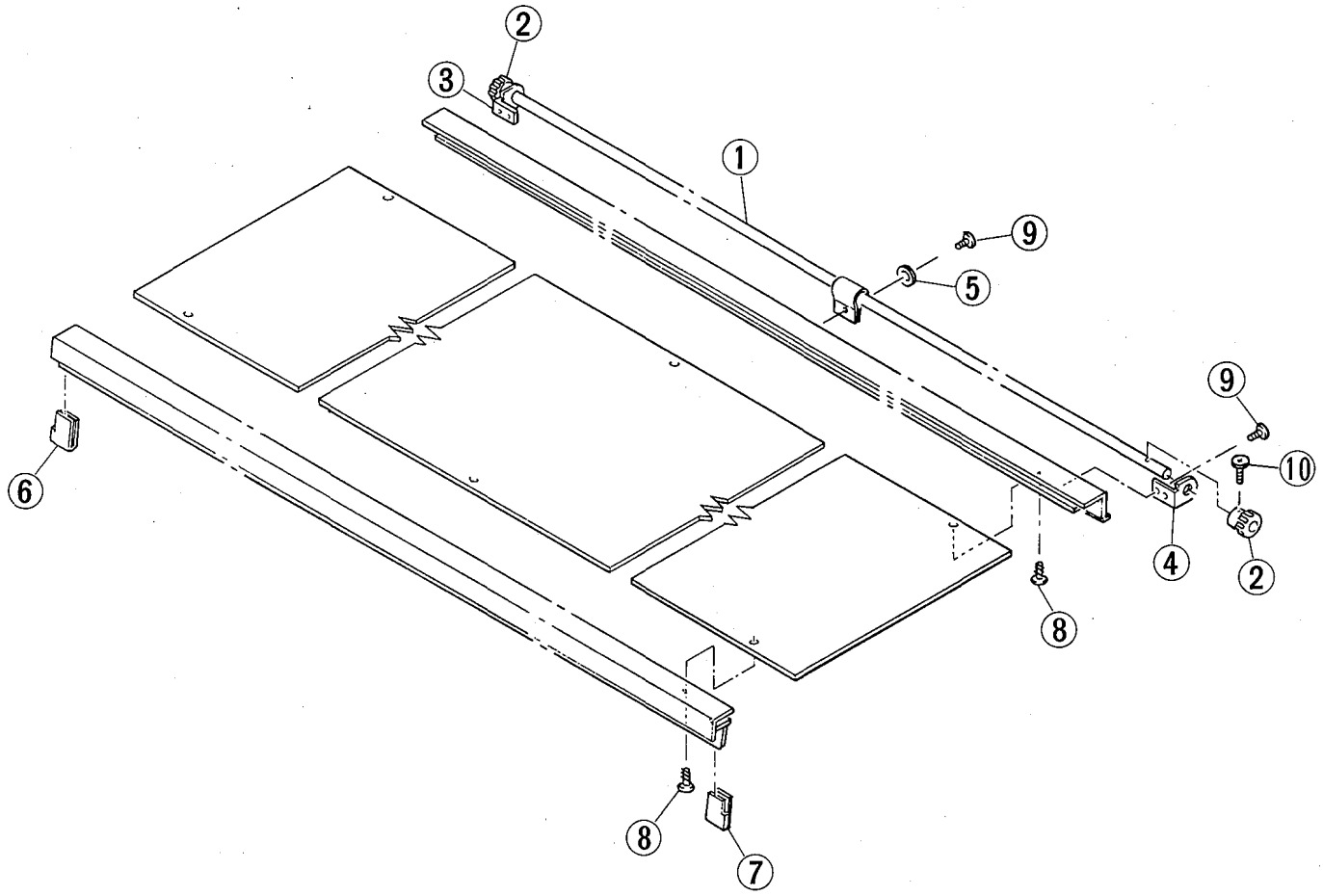

Ref. No.	Part No.	Description		部品名	Remarks	ランク
	VH676300	Slide Cover Assembly		スライド蓋Ａｓｓ'ｙ	CLP760	25
1	VH666600	Slide Cover Rod		連動棒		07
2	VD139800	Slide Cover Gear		ピニオンギヤ		02
3	VF701000	Angle, Slide Cover Gear	Left	連動棒取付金具（左）		01
4	VF701100	Angle, Slide Cover Gear	Right	連動棒取付金具（右）		01
5	ET500070	Flat Washer	4X10X0.8 ZMC2BL	平座金みがき丸		01
6	VG058800	Slide Rubber	Left	スライドラバー（左）		01
7	VG058900	Slide Rubber	Right	スライドラバー（右）		01
8	EI326066	Bind Head Tapping Screw	2.6X5 ZMC2BL	ﾊﾞｲﾝﾄﾞﾀｯﾋﾟﾝｸﾞﾈｼﾞ		01
9	ED030066	Bind Head Screw	3.0X6 ZMC2Y	バインド小ネジ		01
10	EB330106	Flat Head Screw	3.0X10 ZMC2Y	皿小ネジ		01

＊New Parts（新規部品）　　ランク：Japan only

■ KEYBOARD ASSEMBLY (鍵盤Ass'y)

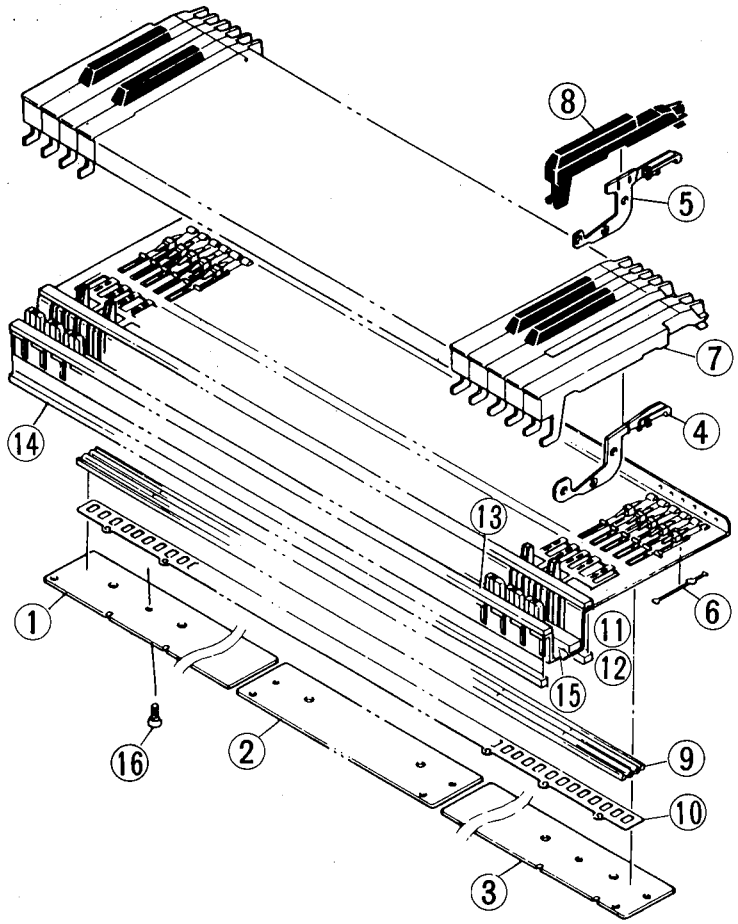

Ref. No.	Part No.	Description		部品名	Remarks	ランク
	VC530600	Keyboard Assembly	A88 K6	AE鍵盤Ass'y	CLP760	70
1	VC796500	Circuit Board	AE88L	AE88Lシート		09
2	VC796300	Circuit Board	AE-C	AE-Cシート		10
3	VC796600	Circuit Board	AE88H	AE88Hシート		08
4	VD317300	Hummer Assembly	WH	ハンマー白鍵Ass'y		04
5	VD317900	Hummer Assembly	BL	ハンマー黒鍵Ass'y		04
6	VC795100	Key Spring	AE MK	鍵バネ		01
7	VC507100	White Key	C	白鍵C		03
7	VC507200	White Key	D	白鍵D		03
7	VC507300	White Key	E	白鍵E		03
7	VC507400	White Key	F	白鍵F		03
7	VC507500	White Key	G	白鍵G		03
7	VC507600	White Key	A	白鍵A		03
7	VC507700	White Key	B	白鍵B		03
7	VC507800	White Key	C'	白鍵C'		03
7	VC508100	White Key	A'	白鍵A'		03
8	VC508300	Black Key		黒鍵		02
9	VC799200	Rubber Contact	AE88	可動導電ゴム		08
10	VC799300	Insulation Spacer	AE88	絶縁スペーサー		03
11	VC984900	Felt	A	フェルトA		04
12	VI437200	Cushion		クッション		05
13	VC985100	Felt	C	フェルトC		03
14	VC985200	Felt	D	フェルトD		03
15	VC985300	Felt	E	フェルトE		05
16	EI330106	Bind Head Tapping Screw	3.0X10 ZMC2BL	ﾊﾞｲﾝﾄﾞﾀｯﾋﾟﾝｸﾞﾈｼﾞ		01

＊New Parts (新規部品)

ランク：Japan only

■BENCH（椅子）BC8

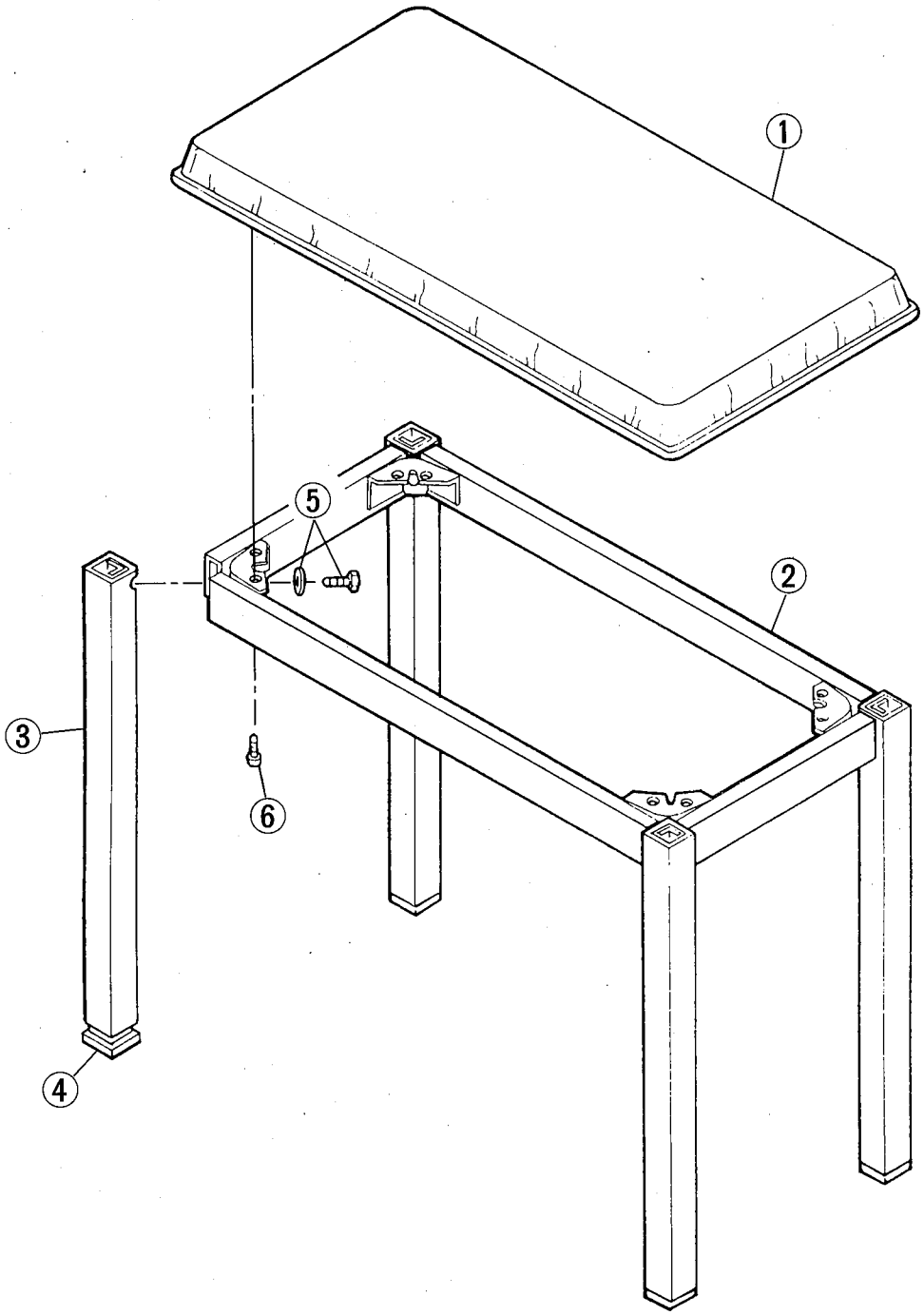

Ref. No.	Part No.	Description		部品名	Remarks	ランク
1	NX004160	Bench Board Assembly	BC-8	座板Ass'y	J,U CLP760	16
1	NX004170	Bench Board Assembly	BC-8	座板Ass'y	C,X	
* 1		Bench Board Assembly	BC-8	座板Ass'y	B	
2	AX000350	Bench Frame Assembly		座枠Ass'y		13
3	AX000360	Leg Pipe Assembly		脚パイプAss'y		08
4	CX003630	Leg Cap		脚キャップ		01
5	EX000450	Hexagonal Nut + SP Washer	5.0X12 L	バネ座付六角ナット		03
6	EJ350206	Pan Head Tapping Screw	5.0X20 FCM3BL	ナベタッピングネジ		01

* New Parts（新規部品）

ランク：Japan only

CLP-760 OVERALL CIRCUIT DIAGRAM (Main Section)

Notes)

Circuit Board: DM (VJ101800) XH239B0

1. IC
IC 1: YM6633 (XH543A00) KSN
IC 3: HD6433282A17F (XH645A00) CPU (H8/532)
LH5164D-10L (XF878A00) 64K SRAM
IC 4: PARA. (XH628A00) ROM 4M
IC 6: SN74HC138N (IR013850) DECODER-3
IC 7, 55: SN74HC08N (IR003850) AND
IC 8–13: YM7119 (XS995A00) M3
IC 14: SN74HC02N (IR023850) NOR
IC 15, 17: SN74HC139N (IR013850) DECODER-2
IC 16: YM3808 (XA798001) MIX
IC 18: YM3413 (XE443A00) LDSP
IC 19: SN74HC132N (IR013250) NAND
IC 20: TC51832PL-10 (XC628A00) 256K PSRAM
IC21, 22, 24, 25: SN74HC365N (IR036550) BUS DRIVER
IC 23, 26: SN74HC245N (IR024550) TRANSCEIVER
IC27: WAVE-1 (XH629A00) ROM 4M
IC28: WAVE-2 (XH630A00) ROM 4M
IC29: WAVE-3 (XH631A00) ROM 4M
IC30: WAVE-4 (XH632A00) ROM 4M
IC31: WAVE-5 (XH633A00) ROM 4M
IC32: WAVE-6 (XH634A00) ROM 4M
IC33: WAVE-7 (XH635A00) ROM 4M
IC34: WAVE-8 (XH636A00) ROM 4M
IC35: WAVE-9 (XH637A00) ROM 4M
IC36: WAVE-10 (XH638A00) ROM 4M
IC37: WAVE-11 (XH639A00) ROM 4M
IC38: WAVE-12 (XH640A00) ROM 4M
IC39: WAVE-13 (XH641A00) ROM 4M
IC40: WAVE-14 (XH642A00) ROM 4M
IC41: WAVE-15 (XH643A00) ROM 4M
IC42: WAVE-16 (XH644A00) ROM 4M
IC43: AD1856 (XF371A00) DAC
IC44: YM3029 (XF237A00) AFDO
μPC4570HA (XB247001) OP AMP.
NJM072S (XA778001) OP AMP.
2. Photo Coupler PC 1: 6N137 (VD473200)
3. Transistor Tr 1–4: 2SC1740S R, S (IC174070)
Tr 5: 2SA1015 O, Y (IA101550)
4. Transistor Array IC 2: TD62703P (VF519600)
IC54: MC1413P (VX441500)
5. Diode D 1–5: 1SS133 (IF003450)
6. Zener Diode ZD 1: MTZ5.6B 5.6V (VA007600)
7. Resistor Array RA 1: RGLD8X103J (VE445200)
RA 2: RGLD4X103J (VE443500)
RA 3: RGLD5X103J (VJ252800)
8. Semiconductive Cera. Cap. 0.1μF 16V Z (FZ004110)
9. Super Capactor: 0.1F 5.5V FYQOH (VI055000)
10. Cell SN: 10μH SN3-205 (GE901870)
SBT:FL: 70μH FL5R2000NT (VB835000) or
60μH SBT-0460T (VD473700) or
60μH SBT0260TF (VF968800)
11. LC Filter (VJ446300)
12. Ceramic Resonator 4MHZ: CST4.00MGW040 (VI653000)
13. Quartz Crystal Unit 6.144MHZ: 6.144M AT-49 (VH949900)
20MHZ: 20M AT-49 (VI927300)
14. Ferrite Bead FB: BLO2RN1-R62T4 (GE300610)
WB: BLO2RN2-R62T4 (GE300670)
15. Trimmer Potentiometer VR1: B100K (VB5932000) AD adj.

Notes)

Circuit Board: PN (NX004900) XH513B0

1. Diode +B: 1SS133 (IF003450)
2. LED +B: SLZ-190B-03 R6 (VD180000)
3. Side Pot.: A10K-2 (VK389000) MASTER VOLUME
B10K RS15111C with click (VJ290600)
BRILLIANCE, REVERB, EFFECT
4. Push Switch: KEC10901 (KA906550)

Notes)

Circuit Board: JACK 1/2 (NX004910) XH514D0
JACK 2/2 (NX004920) XH514D0

1. Coil SBT: 60μHSBT0260TF (VF868800)
80μSBT-0180W (VF456800)
2. DIN Jack: SP YKF51-50 (VB312500) MIDI
3. Phone Jack: HLJ0521 (LB202330) AUX OUT
4. Pin Jack: YKC21-0188 (VI145300) OPTIONAL

Notes)

Circuit Board: HP (VF710500) XE779B0

1. Semiconductive Cera. Cap. C 1–3: 0.1μF 16V Z (FZ004110)
2. Coil L 1–3: 20μFFL5R2000N (VB971100)
3. Phone Jack: YKB21-5006 (LB101870) HEADPHONES

Notes)

Circuit Board : PU100M (VJ529800) XG048A0 J, X, M
PU100M (VJ101500) XG048A0 U, C
PU100M (VJ101600) XG048A0 H, B, A

1. IC
IC 2: NJM7805FA (XC719001) 5V REGULATOR
IC 3: NJM7812A (XB249001) 12V REGULATOR
IC 4: NJM7912FA (XD343A00) –12V REGULATOR
IC 5: STK4191-5 (XB029001) 50W 2CH P AMP.
IC 6: μPC4570HA (XB247001) OP AMP.

2. Transistor Tr1, 2, 4: 2SC1815 GR (IC181530)
3. Diode D 1 – 5, 7: 1SS4 (VB481900)
4. Diode Stack D 1, 2: 4D4B42 3A 200V (HI001790)
D 3: 1D2C1 2A 200V (VB491200)
D 4: 1D2Z1 2A 200V (VB493300)
5. Metal Oxide Film Resistor R16, 47: 10Ω 1W (VC742500)
R19, 20: 680Ω 2W (VC761000)
R29, 52: 0.22Ω 2W (VC751900)
6. Fuse Resistor F 6, 40: 100Ω 1/4 (HW095100)
7. Ceramic Cap. C 1 – 4: 0.01μF 400V (FI384100) or
0.01μF 400V (FI494100)
8. Semiconductive Cera. Cap. Marked 0.1(E): 0.1μF 50V (FZ007280)
9. Coil L 1: 10μHSU10V20010 (VD293400)
L 2: 10μSU10V20010 (VI780900)
L 3, 4: RZ-001 1.5UH (GD900470)
10. Relay RY 1: DC DH24D2-DTM) (KC001940) 24V
11. Fuse F 1: T3.0A 250V (IK8003600) J, X, M
F 1: T1.25A 250V (IK8004300) J, X, M
F 2, 4: T2.00A 250V (IK8003500) J, X, M
F 1: T3.0A 250V (IK8002650) U, C
F 2: T1.25A 250V (IK8001450) U, C
F 3,4: T2.00A 250V (IK8001240 U, C
F 1: T1.6A 250V (IK8002620 H, B, A
F 2: T1.25A 250V (IK8000680 H, B, A
F 3, 4: T2.00A 250V (IK8000750 H, B, A

Notes)

Circuit Board: PU100P (VJ101400)
XH437B0

1. IC
IC 1, 2,6: μPC4570HA (XB247001) OP AMP.
IC 3: M5218L (XB419001)
OP AMP 2CH
IC 4, 5, 7, 8: M5229P (XD203A00)
G.EQUALIZER
IC 9, 10: LA4500 (IG151600)
P AMP.
2. Transistor Tr1, 2: 2SC1815 GR (IC181530)
3. Diode D 1 – 3: 1SS133 (IF003450)
4. Semiconductive Cera. Cap. 0.1μF 16V Z (FZ004110)
5. Relay RY 1, 2: DC RY12W (KC001900) 12V DC DH24D 20T (M) (KC001940) 24V
RY 3:

PN

REVERB
STEREO DELAY
ROOM
HALL
EFFECT
DETUNE
CHORUS
TREMOLO
TOUCH SENSITIVITY
HARD
MEDIUM
SOFT
MASTER VOLUME
BRILLIANCE
DEPTH
TREMOLO SPEED
MIDI / TRANSPOSE
PIANO 1
PIANO 2
PIANO 3
CLAVINOVA TONE
E. PIANO 1
E. PIANO 2
HARPSI
VIBES
STRINGS
ORGAN
SPLIT
LED1 LED2 LED3 LED4 LED5 LED6 LED7 LED8 LED9 LED10 LED11 LED12 LED13 LED14 LED15 LED16 LED17 LED18 LED19 LED20
D1 D2 D3 D4 D5 D6 D7 D8 D9 D10 D11 D12 D13 D14 D15 D16
VR4 A 10K
VR5 B 10K
VR6 B 10K
VR7 B 10K
A 10K
CN1 CN2 CN3 CN4 CN5

28CC1-8810004 2

from DM-CN2
from DM-CN7
from DM-CN6
to PU100P-CN2

MK

D1 D5 D10 D15 D20 D25 D30 D31 D154 D155 D160 D165 D170 D175
MK0 MK1 MK2 MK3 MK4 MK5 MK6 MK10 MK11 MK12 MK13 MK14 MK15
A-1 A0 A1 B-1 B0 B1 B2 C0 C1 C6 D0 D6 E0 E6 F0 F6 G0 G6 A6 B6 C7
B0 B1 B2 B3 B4 B5 B6 B7 B8 B9 B10 B11 B12 B13 B14
BK0 BK1 BK2 BK3 BK4 BK5 BK6 BK7 BK8 BK9 BK10 BK11 BK12 BK13 BK14
KEC-11460 2

JACK 2/2
M120
CN7
PEDAL
CN4
CN8

DM

refer to Main section
CN10
CN9
CN5
CN7
CN6
CN2
CN3
CN1

Primary winding of the power transformer for each models.

For US & Canadian Models.
CN3: BR 120V, YE, GY 0V

For North European Model.
CN3: RE 220V, RE 240V, GY 0V

For General Export & Australian Models.
CN3: YE, RE 230V, BR 120V, GY 0V

For British Model.
CN3: RE 240V, BE 220V, GY 0V

POWER
For Japanese Model
CN1 CN2 CN3
F1 0.01 +2
L1 L2 20mH
C3 0.01
C4 0.01
YE 100V BR GY 0V

PU100P

CN2 CN4 CN5 CN6 CN7 CN8 CN9 CN10 CN11
LEFT RIGHT
IC 1 IC 2 IC 3 1/2 IC 3 2/2
IC 4 M5229P IC 5 M5229P IC 7 M5229P IC 8 M5229P
G. Equalizer
IC 6
IC 9 IC 10 LA4500
L channel Power Amp.
R channel Power Amp.
OPT OUT L OPT OUT R OPT IN L OPT IN R
AUX OUT L AUX OUT R
MUTE
TR1 TR2
D1 D3
RY1 RY2 RY3
JP
Monitor Speker 6.5 x 13 cm 8Ω

JACK 1/2
OPTIONAL OUT
OPTIONAL IN
L/L+R
AUX OUT
L R

28CB1-8810003 1

HP
HEADPHONES

28CB1-8810005 4

28CB1-8810005 5

PU100M

CN1 CN2 CN3 CN4 CN5 CN6 CN7 CN8
T1
D1 D2 D3 D4
IC 2 IC 3 IC 4 IC 5 IC 6
TR1 TR2 TR4
FRIOO
L IN R IN
Main Speakers
Tweeter R 5cm 16Ω
Woofer R 16cm 8Ω
Tweeter L 5cm 16Ω
Woofer L 16cm 8Ω

28CB1-8810035 6