Clavinova®

# CLP-565GP/CLP-565GPWH

# SERVICE MANUAL



● CLP-565GP



● CLP-565GPWH

## ■ CONTENTS


SPECIFICATIONS ..... 3
PANEL LAYOUT ..... 5
DISASSEMBLY PROCEDURE ..... 7
LSI PIN DESCRIPTION ..... 21
CIRCUIT BOARDS ..... 25
TEST PROGRAM ..... 40
INITIAL SETTING ..... 48
BACKUP ..... 49
RESTORE ..... 49
FACTORY SET ..... 50
VERSION UPDATING ..... 51
DM CIRCUIT BOARD CHECK METHOD ..... 53
SYSTEM BOOTING FLOWCHART ..... 55
MESSAGE LIST ..... 57
PARTS LIST
BLOCK DIAGRAM
CIRCUIT BOARD LAYOUT & WIRING
CIRCUIT DIAGRAM



CL 001905

YAMAHA

HAMAMATSU, JAPAN



Copyright (c) Yamaha Corporation. All rights reserved. PDF '14.04

## IMPORTANT NOTICE

This manual has been provided for the use of authorized Yamaha Retailers and their service personnel. It has been assumed that basic service procedures inherent to the industry, and more specifically Yamaha Products, are already known and understood by the users, and have therefore not been restated.

**WARNING :** Failure to follow appropriate service and safety procedures when servicing this product may result in personal injury, destruction of expensive components and failure of the product to perform as specified. For these reasons, we advise all Yamaha product owners that all service required should be performed by an authorized Yamaha Retailer or the appointed service representative.

**IMPORTANT :** This presentation or sale of this manual to any individual or firm does not constitute authorization certification, recognition of any applicable technical capabilities, or establish a principal-agent relationship of any form.

The data provided is belived to be accurate and applicable to the unit(s) indicated on the cover. The research engineering, and service departments of Yamaha are continually striving to improve Yamaha products. Modifications are, therefore, inevitable and changes in specification are subject to change without notice or obligation to retrofit. Should any discrepancy appear to exist, please contact the distributor's Service Division.

**WARNING :** Static discharges can destroy expensive components. Discharge any static electricity your body may have accumulated by grounding yourself to the ground bus in the unit (heavy gauge black wires connect to this bus.)

**IMPORTANT :** Turn the unit OFF during disassembly and parts replacement. Recheck all work before you apply power to the unit.

**WARNING:** This product contains chemicals known to the State of California to cause cancer, or birth defects or other reproductive harm.

DO NOT PLACE SOLDER, ELECTRICAL/ELECTRONIC OR PLASTIC COMPONENTS IN YOUR MOUTH FOR ANY REASON WHAT SO EVER!

Avoid prolonged, unprotected contact between solder and your skin! When soldering, do not inhale solder fumes or expose eyes to solder/flux vapor!

If you come in contact with solder or components located inside the enclosure of this product, wash your hands before handling food.

### IMPORTANT NOTICE FOR THE UNITED KINGDOM

**Connecting the Plug and Cord**

IMPORTANT. The wires in this mains lead are coloured in accordance with the following code:

BLUE : NEUTRAL
BROWN : LIVE

As the colours of the wires in the mains lead of this apparatus may not correspond with the coloured makings identifying the terminals in your plug proceed as follows:

The wire which is coloured BLUE must be connected to the terminal which is marked with the letter N or coloured BLACK.

The wire which is coloured BROWN must be connected to the terminal which is marked with the letter L or coloured RED.

Making sure that neither core is connected to the earth terminal of the three pin plug.

(2 wires)

## SAVING DATA



**Be sure to perform it**

- The recorded Song is lost when you turn off the power of the instrument without saving. Save the recorded data to the instrument or USB flash memory. Saved data may be lost due to malfunction or incorrect operation. Save important data to a USB flash memory/external device such as a computer.
- To protect against data loss through media damage, we recommend that you save your important data onto two USB flash memory devices.

## WARNING

Components having special characteristics are marked ⚠ and must be replaced with parts having specification equal to those originally installed.

# SPECIFICATIONS

| | | | |
|---|---|---|---|
| **Size/Weight** | Dimensions | Width | 1430 mm (56-5/16") |
| | | Height | 932 mm (36-11/16") |
| | | Height with music rest | 1103 mm (43-7/16") |
| | | Height with lid up | 1400 mm (55-1/8") |
| | | Depth | 1147 mm (45-3/16") |
| | Weight | | 101 kg (222 lbs. 11 oz.) |
| **Control Interface** | Keyboard | Number of Keys | 88 |
| | | Type | GH3X with synthetic ivory keytops, escapement |
| | | Counter weight | – |
| | | 88-key Linear Graded Hammers | – |
| | | Touch Response | Hard 2, Hard 1, Medium, Soft 1, Soft 2, Fixed |
| | Pedal | Number of Pedals | 3 |
| | | Half Pedal | Yes (Damper) |
| | | Functions | Damper with half pedal effect, Sostenuto, Soft |
| | | GP Responsive Damper Pedal | – |
| | Display | Type | Full Dot LCD |
| | | Size | 128 x 64 dots |
| | | Contrast | Adjustable |
| | | Language | English |
| | Panel | Language | English |
| **Cabinet** | Key Cover Style | | Sliding |
| | Music Rest | | Yes |
| | Music Braces | | Yes |
| **Voices** | Tone Generation | Tone Generation Technology | Yamaha CFX, Bösendorfer Imperial |
| | Piano Tone Generation Effects | VRM | – |
| | | String Resonance | Yes |
| | | Damper Resonance | Yes |
| | | Key-off Samples | Yes |
| | | Smooth Release | Yes |
| | Polyphony | Number of Polyphony (Max.) | 256 |
| | Preset | Number of Voices | 34 |
| | Compatibility | XG | – |
| | | GS | – |
| | | GM | – |
| | | GM2 | – |
| **Effects** | Types | Reverb | 6 types |
| | | Chorus | 3 types |
| | | Brilliance | 7 types |
| | | Effect | 12 types |
| | | IAC | Yes |
| | | Stereophonic Optimizer | – |
| | Functions | Dual/Layers | Yes |
| | | Split | Yes |

| | | | |
|---|---|---|---|
| **Songs (MIDI)** | Preset | Number of Preset Songs | 18 Voice Demo Songs + 50 Piano Songs + 303 Lesson Songs |
| | Recording | Number of Songs | 250 |
| | | Number of Tracks | 16 |
| | | Data Capacity | approx. 500KB/Song |
| | Playback | Data Capacity | approx. 500KB/Song |
| | Data Format | Recording | SMF (Format 0) |
| | | Playback | SMF (Format 0 & 1) |
| **Songs (Audio)** | Recording Time (max.) | | 80 minutes/Song |
| | Data Format (Recording/Playback) | | .wav (44.1 kHz sample rate, 16 bit resolution, stereo) |
| **Functions** | Rhythm | Preset | – |
| | Overall Controls | Metronome | Yes |
| | | Tempo Range | 5 – 500 (quarter note) |
| | | Transpose | -12 – 0 – +12 |
| | | Tuning | 414.8 – 440 – 466.8 Hz |
| | | Scale Type | 7 types |
| **Storage and Connectivity** | Storage | Internal Memory | Total maximum size approx. 1.5MB |
| | | External Device | USB flash memory (sold separately) |
| | Connectivity | Headphones | Yes (x 2) |
| | | MIDI | [IN][OUT][THRU] |
| | | AUX IN | Stereo Mini |
| | | AUX OUT | [L/L+R][R] |
| | | AUX PEDAL | – |
| | | USB TO DEVICE | Yes |
| | | USB TO HOST | Yes |
| **Amplifiers/ Speakers** | Amplifiers | | (25W+10W) x 2 |
| | Speakers | | (16cm+5cm) x 2 |
| | Acoustic Optimizer | | Yes |
| **Power Supply** | Auto Power Off | | Yes |
| **Included Accessories** | | | Owner's Manual, Warranty *, "50 Greats for the Piano" Music Book, Online Member Product Registration, Bench*, AC power cord* *May be included depending on your locale. |
| **Optional Accessories (May not be available depending on your locale.)** | | | Headphones HPE-160, MIDI Interface i-MX1, USB MIDI Interface i-UX1, USB Wireless LAN Adaptor UD-WL01 |

# PANEL LAYOUT

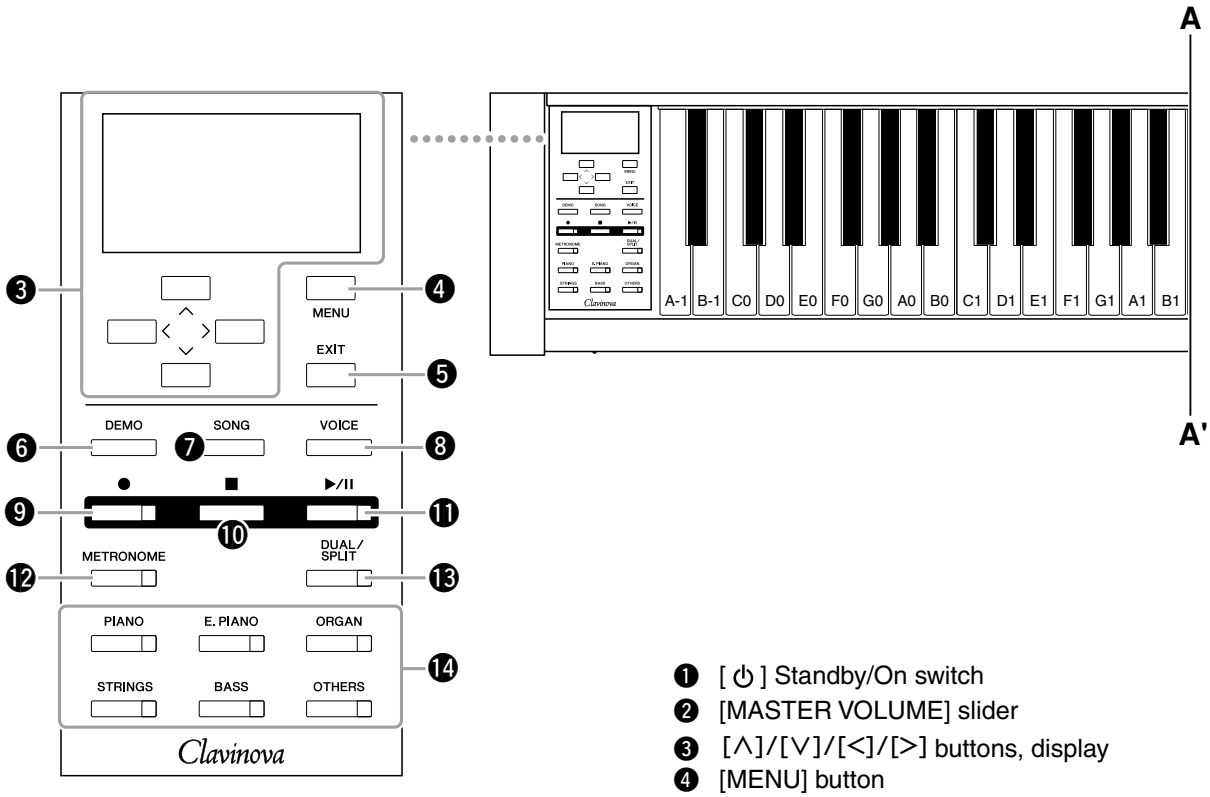


❶ [ ⏻ ] Standby/On switch
❷ [MASTER VOLUME] slider
❸ [∧]/[∨]/[<]/[>] buttons, display
❹ [MENU] button
❺ [EXIT] button
❻ [DEMO] button
❼ [SONG] button
❽ [VOICE] button
❾ [●](Recording) button
❿ [■](Stop) button
⓫ [►/▮▮](Play/Pause) button
⓬ [METRONOME] button
⓭ [DUAL/SPLIT] button
⓮ Voice group buttons
⓯ USB [TO DEVICE] terminal
⓰ USB [TO HOST] terminal
⓱ [AUX IN] jack
⓲ [PHONES] jacks
⓳ MIDI [IN], [OUT], [THRU] terminals
⓴ [PEDAL] jack
㉑ AUX OUT [R] [L/L+R] jacks
㉒ Damper pedal (right pedal)
Sostenuto pedal (center pedal)
Soft pedal (left pedal)
㉓ [AC IN] connector

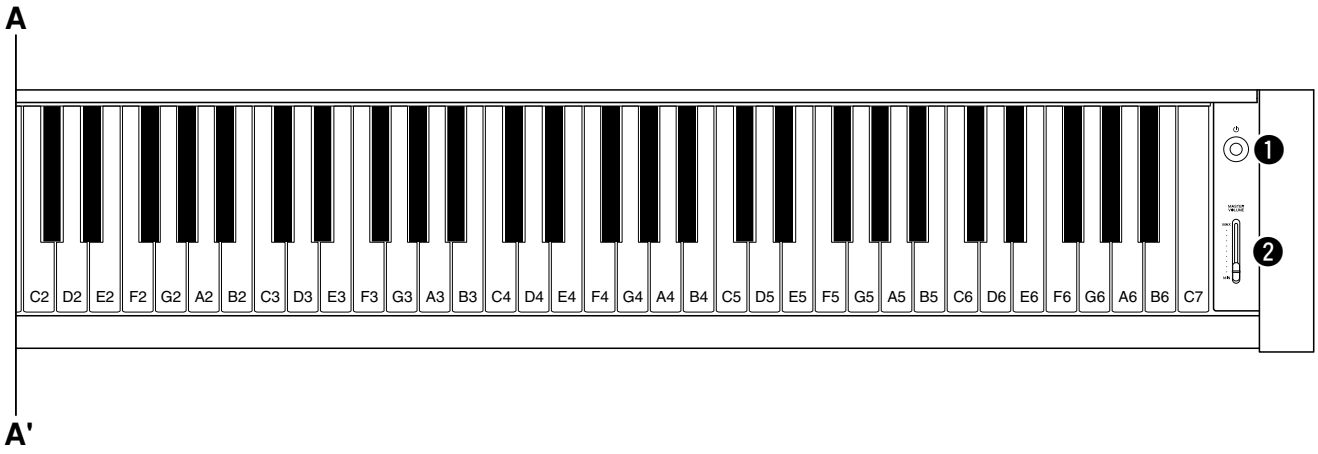
A
C2 D2 E2 F2 G2 A2 B2 C3 D3 E3 F3 G3 A3 B3 C4 D4 E4 F4 G4 A4 B4 C5 D5 E5 F5 G5 A5 B5 C6 D6 E6 F6 G6 A6 B6 C7
1
2
A'

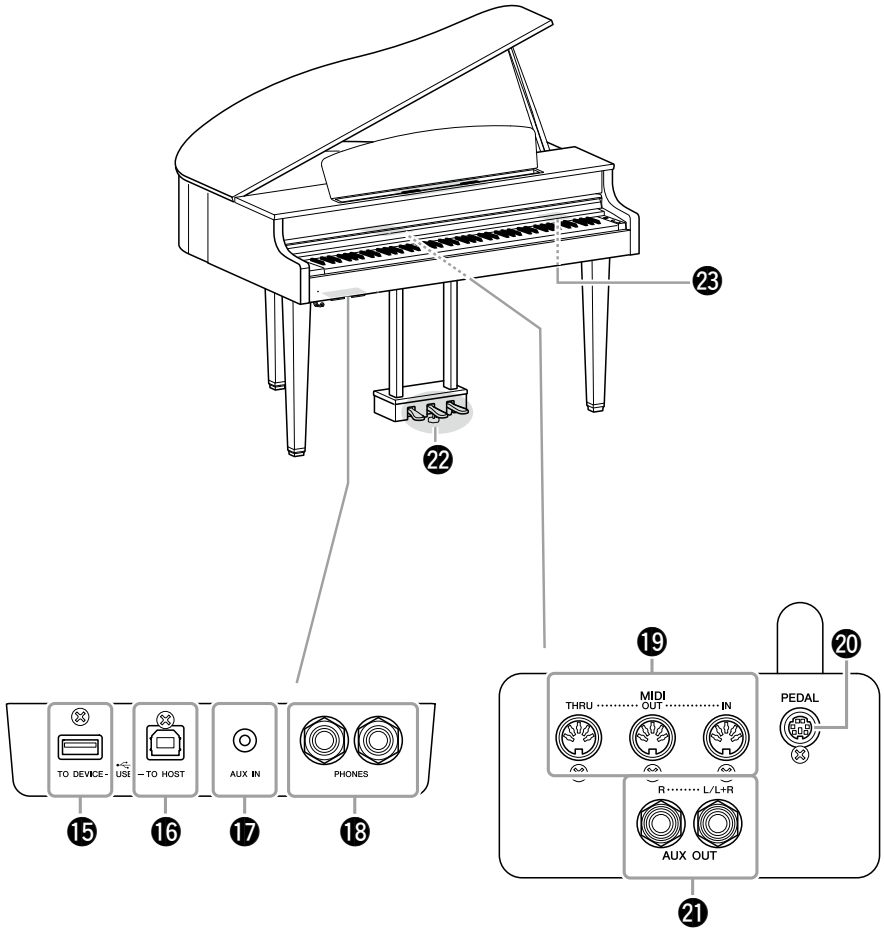
23
22
TO DEVICE
USB
TO HOST
AUX IN
PHONES
15
16
17
18
19
MIDI
THRU
OUT
IN
20
PEDAL
R
L/L+R
AUX OUT
21

# ■ DISASSEMBLY PROCEDURE

## Precaution

| * | **Install the filament tape and the harness clamp in the same way as they were before removal.** |
|---|---|

### 1. Music Rest Assembly
**(Time required : About 1 minute)**

Remove the four (4) screws marked [S13]. The music rest assembly can then be removed. (Fig. 1)

### 2. Top Board L Assembly
**(Time required : About 1 minute)**

Remove the two (2) hinge shafts. The top board L assembly can then be removed. (Fig. 1) (Photo 1)

### 3. Support Bar, Support Bar Angle Assembly
**(Time required : About 2 minutes)**

3-1. Remove the top board L assembly. (See procedure 2)

3-2. Remove the screw marked [S14] and the hexagonal nut marked [S25]. The support bar can then be removed. (Fig. 1)

3-3. Remove the two (2) screws marked [S23A]. The support bar angle assembly can then be removed. (Photo 2)

● **Removal of the hinge shaft**

Remove the two (2) hinge shafts one by one.




Photo 1

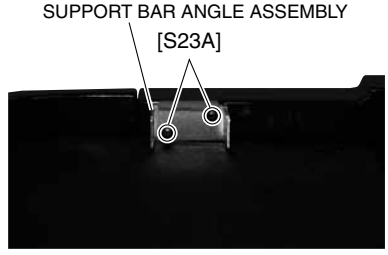


Photo 2

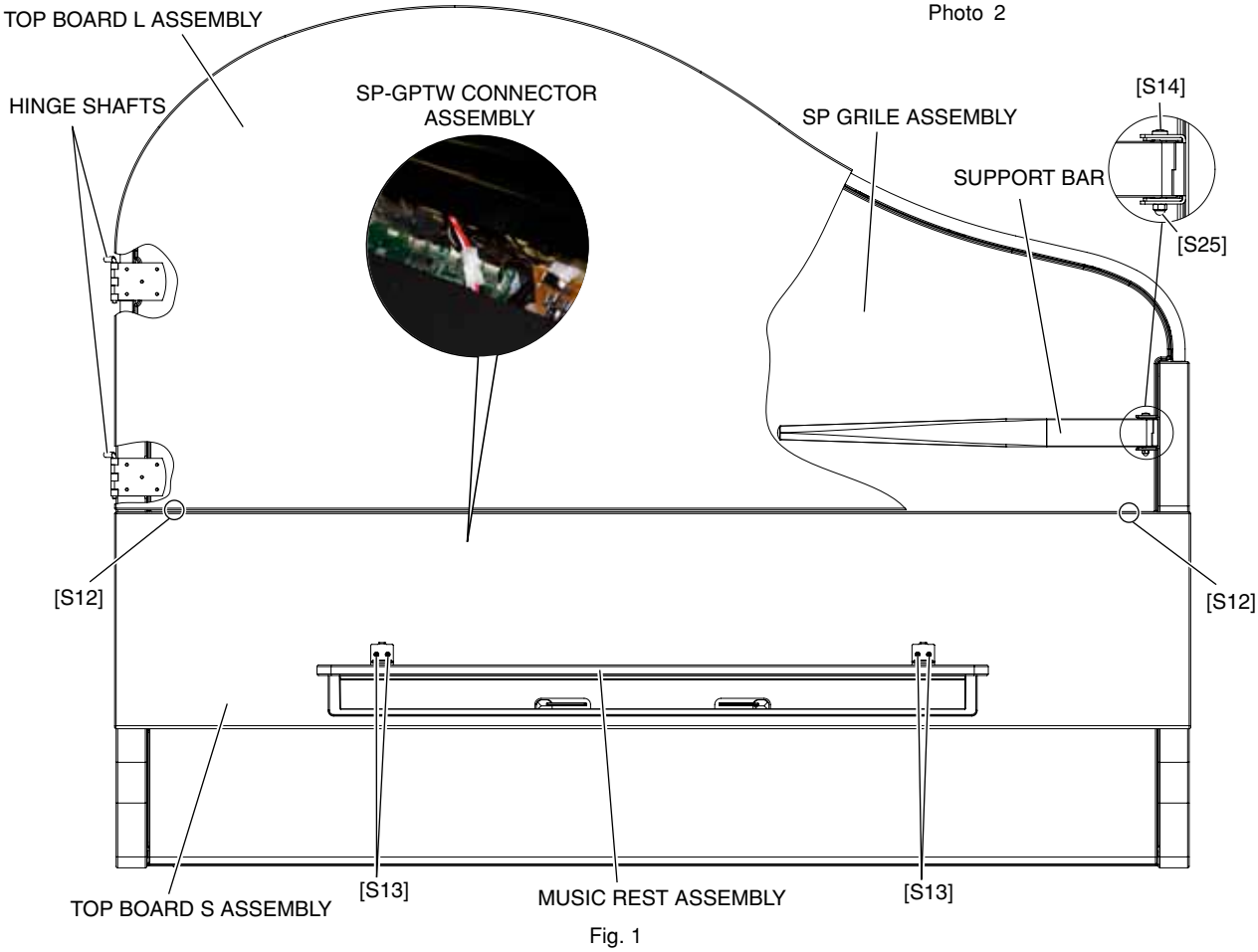


Fig. 1

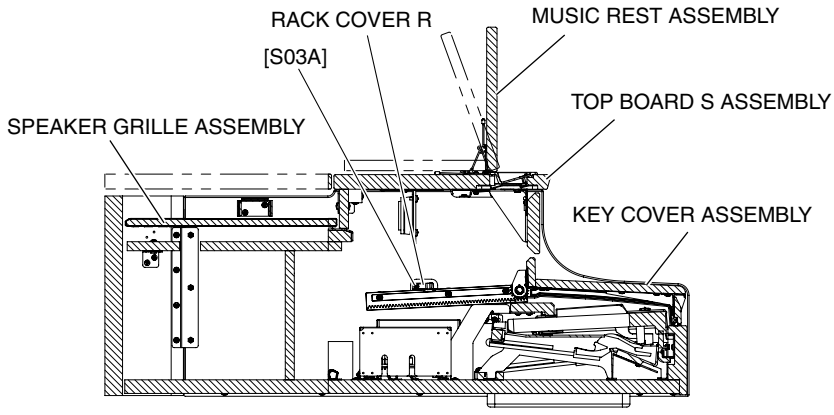


Fig. 2

## 4. Speaker Grille Assembly
**(Time required : About 1 minute)**

4-1. Remove the top board L assembly. (See procedure 2)

4-2. Remove the speaker grille assembly. (Fig. 1)

* ***The speaker grille assembly is fixed by the five (5) dual lock fasteners. (Fig. 5)***

## 5. Top Board S Assembly
**(Time required : About 2 minutes)**

5-1. Close the key cover.

5-2. Remove the top board L assembly. (See procedure 2)

5-3. Remove the two (2) screws marked [S12] and slide the top board S assembly forward. (Fig. 1)

5-4. Disconnect the SP-GPTW connector assembly (4P). The top board S assembly can then be removed by lifting up. (Fig. 1)

* ***When installing the top board S assembly, be sure not to make scratches on the arm assembly L/R.***

## 6. Key Cover Assembly
**(Time required: About 3 minutes)**

6-1. Close the key cover.

6-2. Remove the top board L assembly. (See procedure 2)

6-3. Remove the top board S assembly. (See procedure 5)

6-4. Remove the screw marked [S03A]. The rack cover R can then be removed. (Fig. 2)

* ***The rack cover L can then be removed in the same manner.***

6-5. Set the left and right end of the rod at the slits of the rack L and rack R, then lift the rear key cover assembly. (Fig. 3)

6-6. Lean slightly the key cover assembly so that the guide pin can be removed from the guide rail. (Fig. 4)

* ***When removing, be sure not to nake scratches on the side cover.***

* ***When installing the key cover assembly, apply a masking shield tape around the guide rail to prevent from making scratches on the assembly.***

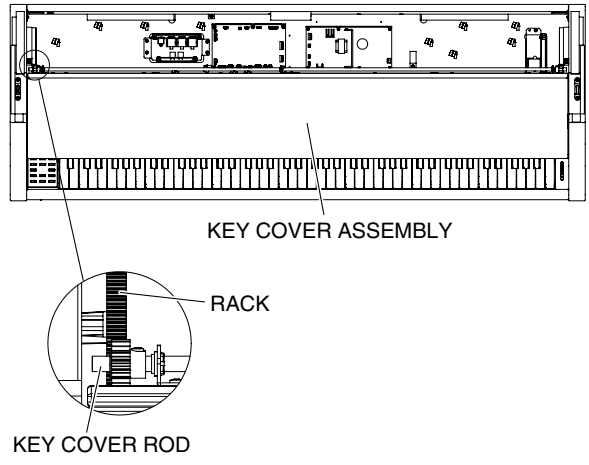


Fig. 3

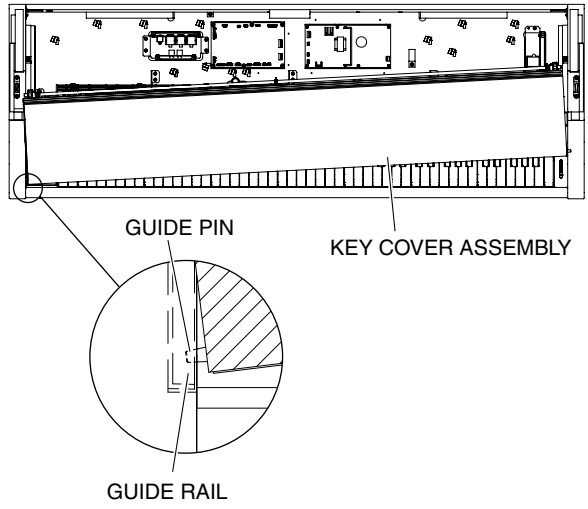


Fig. 4

## 7. Circuit Boards and Assembles
**(Time required: About 3 minutes each)**

7-1. Close the key cover.
7-2. Remove the top board L assembly. (See procedure 2)
7-3. Remove the top board S assembly. (See procedure 5)
7-4. Each circuit board and assembly can be removed by removing its fixing screws as listed below.

| Circuit board and Assembly | | Ref. No. | QTY | Fig. |
|---|---|---|---|---|
| DM COVER | (U model only) | S01A | 3 | 5 |
| DM | | S03B | 6 | 5 |
| PS COVER | (U model only) | S01B | 4 | 5 |
| PS | | S03C | 6 | 5 |
| FU COVER | (U model only) | S01C | 2 | 5 |
| FU ASSEMBLY | | S01D | 2 | 5 |
| JACK ASSEMBLY | | S01E | 4 | 5 |

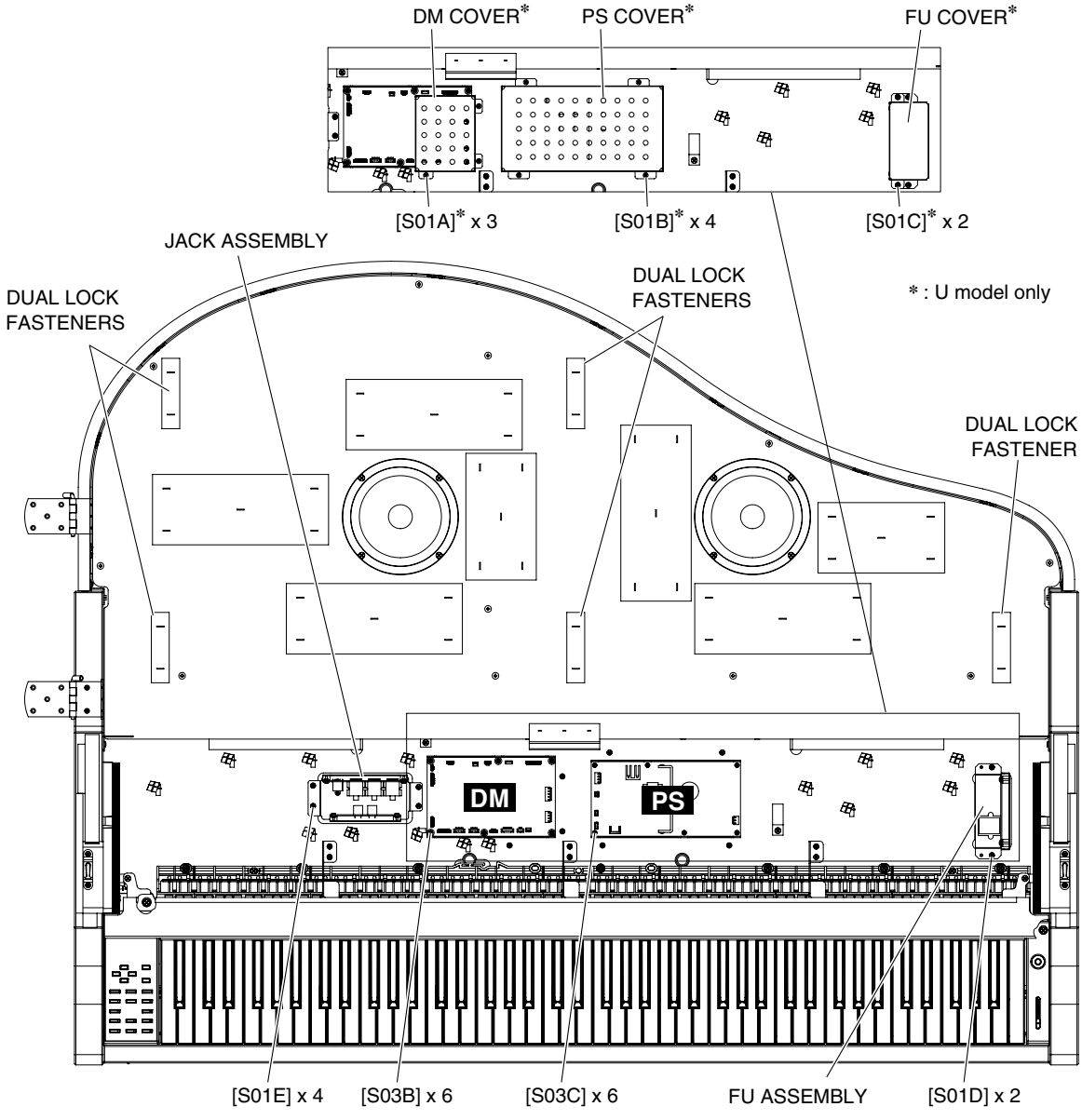


Fig. 5

## 8. HP/USB Assembly, JK Circuit Board

**(Time required: About 2 minutes)**

8-1. Remove the two (2) screws marked [S23B]. (Fig. 6)

8-2. Loosen the two (2) screws marked [S23C]. The HP/USB assembly can then be removed. (Fig. 6)

8-3. Remove the two (2) hexagonal nuts marked [4A], the two (2) washers marked [3], the two (2) screws marked [5A] and the screw marked [6A]. The JK circuit board can then be removed. (Fig. 7)

* ***When installing the JK circuit board, tighten the screws 1, 2 and 3 shown in fig. 7 in numerical order and then tighten the other screws.***

● **HP/USB ASSEMBLY**

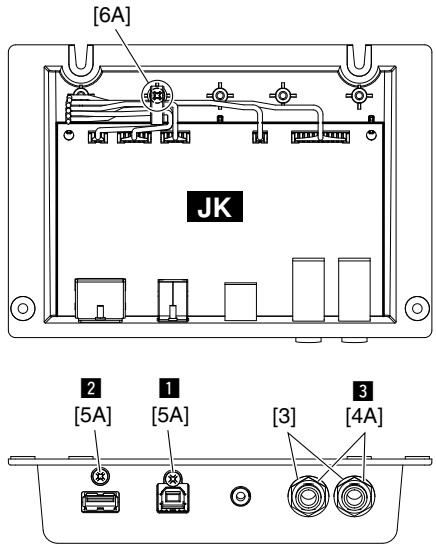


Fig. 7

**<Bottom view>**

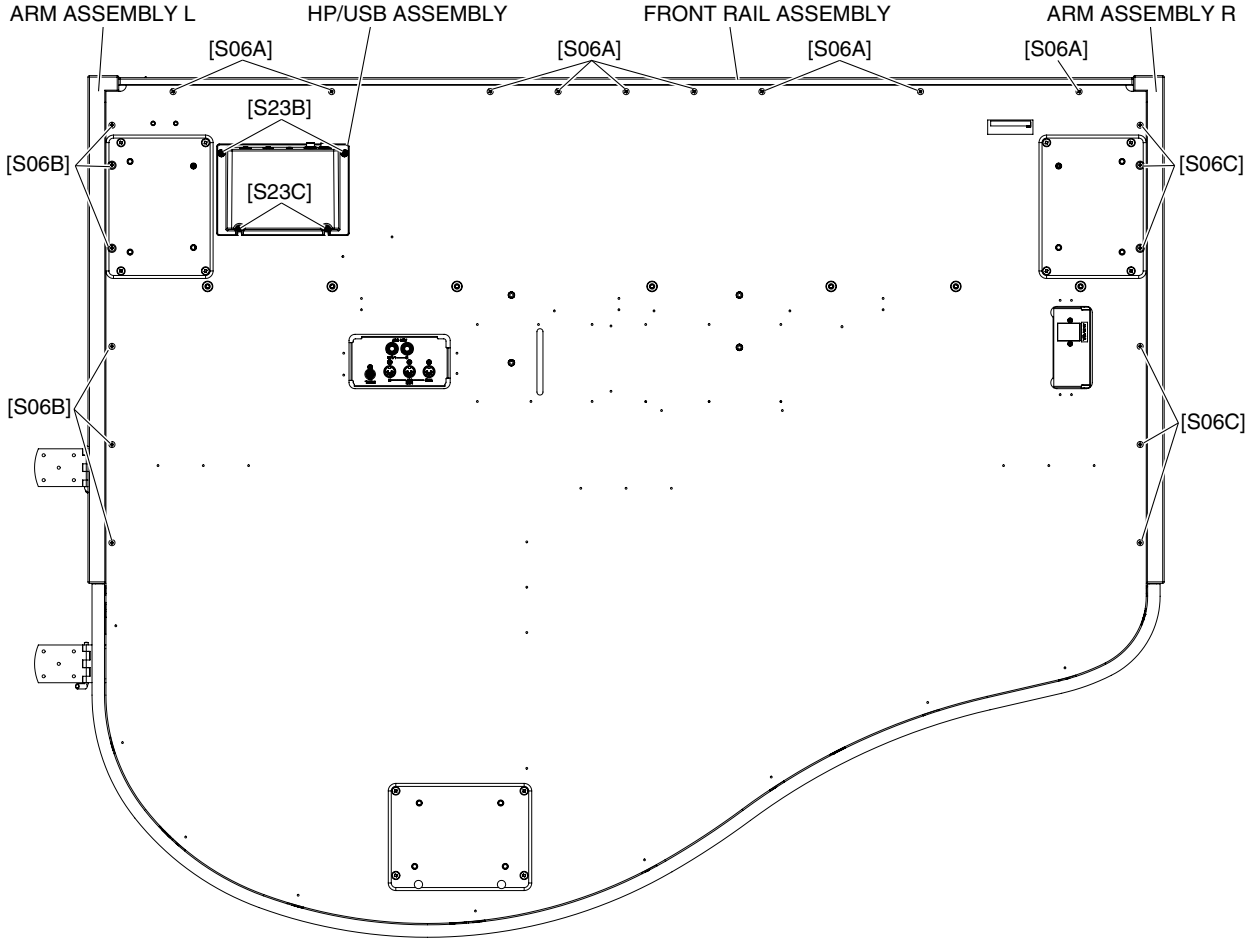


Fig. 6

## 9. FU Circuit Board
**(Time required : About 4 minutes)**

9-1. Remove the top board L assembly. (See procedure 2)
9-2. Remove the top board S assembly. (See procedure 5)
9-3. Remove the FU cover. (See procedure 7)
(U model only)
9-4. Remove the FU assembly. (See procedure 7)
9-5. Remove the two (2) screws marked [47a] and the two (2) screws marked [47c]. The FU circuit board can then be removed. (Fig. 8)

## 10. AJK Circuit Board, DJK Circuit Board
**(Time required : About 5 minutes)**

10-1. Remove the top board L assembly. (See procedure 2)
10-2. Remove the top board S assembly. (See procedure 5)
10-3. Remove the jack assembly. (See procedure 7)
10-4. **AJK Circuit Board**
Remove the two (2) hexagonal nuts marked [6B], the two (2) washers marked [5B] and the two (2) screws marked [7A]. The AJK circuit board can then be removed. (Fig. 9)
10-5. **DJK Circuit Board**
Remove the four (4) screws marked [4B] and the two (2) screws marked [7B]. The DJK circuit board can then be removed. (Fig. 9)

● **FU ASSEMBLY**

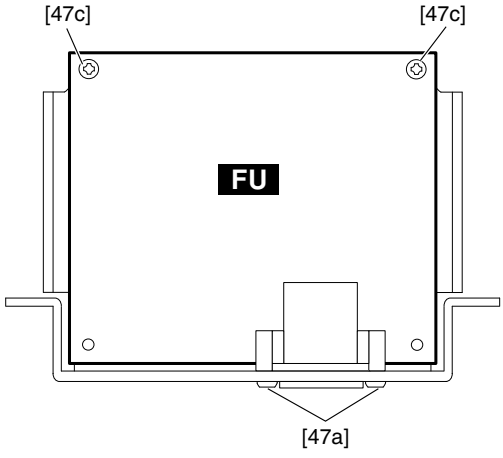


Fig. 8

● **JACK ASSEMBLY**

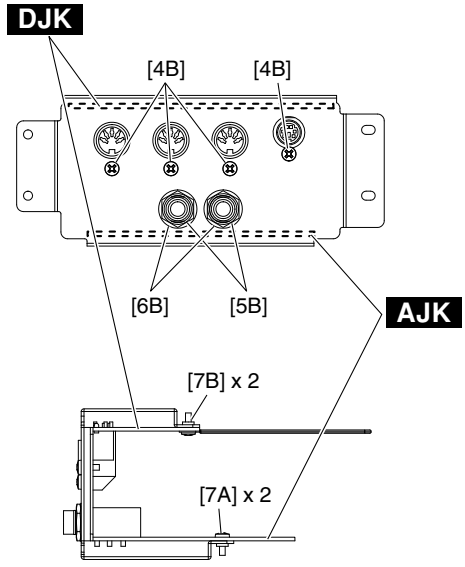


Fig. 9

## 11. Key Stop Rail Assembly
**(Time required: About 4 minutes)**

11-1. Remove the top board L assembly. (See procedure 2)
11-2. Remove the top board S assembly. (See procedure 5)
11-3. Remove the key cover assembly. (See procedure 6)
11-4. Remove the six (6) screws marked [S01F] and the two (2) screws marked [S10A]. The key stop rail assembly can then be removed. (Fig. 10)

## 12. Key Block Assembly L
**(Time required: About 4 minutes)**

12-1. Remove the top board L assembly. (See procedure 2)
12-2. Remove the top board S assembly. (See procedure 5)
12-3. Remove the key cover assembly. (See procedure 6)
12-4. Remove the key stop rail assembly. (See procedure 11)
12-5. Remove the one (1) screw marked [S10B]. The key block assembly L can then be removed. (Fig. 10)

* ***When installing the key block assembly L, tighten the screw while pushing the key block assembly L against the front rail.***

## 13. Key Block Assembly R
**(Time required: About 4 minutes)**

13-1. Remove the top board L assembly. (See procedure 2)
13-2. Remove the top board S assembly. (See procedure 5)
13-3. Remove the key cover assembly. (See procedure 6)
13-4. Remove the key stop rail assembly. (See procedure 11)
13-5. Remove the one (1) screw marked [S10C]. The key block assembly R can then be removed. (Fig. 10)

* ***When installing the key block assembly R, tighten the screw while pushing the key block assembly R against the front rail.***

## 14. PL Circuit Board
**(Time required: About 4 minutes)**

14-1. Remove the top board L assembly. (See procedure 2)
14-2. Remove the top board S assembly. (See procedure 5)
14-3. Remove the key cover assembly. (See procedure 6)
14-4. Remove the key stop rail assembly. (See procedure 11)
14-5. Remove the key block assembly L. (See procedure 12)
14-6. Remove the screw marked [6d]. The PL circuit board can then be removed. (Fig. 10)

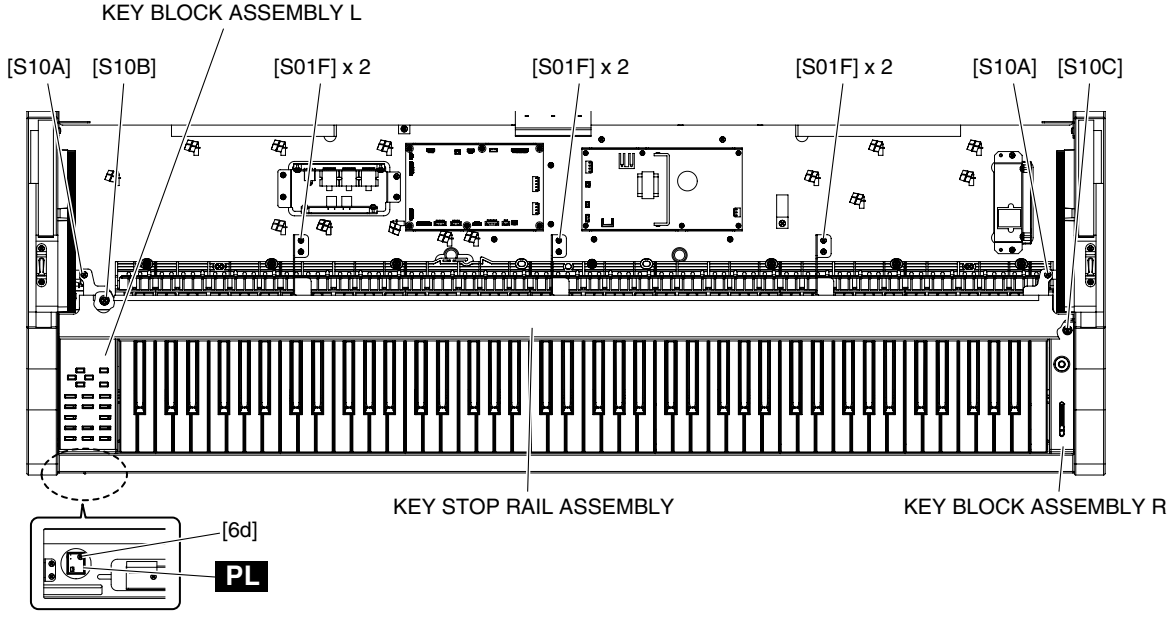


Fig. 10

## 15. PNL Circuit Board, LCD Circuit Board, LCD Unit (Time required: About 5 minutes)

15-1. Remove the top board L assembly. (See procedure 2)
15-2. Remove the top board S assembly. (See procedure 5)
15-3. Remove the key cover assembly. (See procedure 6)
15-4. Remove the key stop rail assembly. (See procedure 11)
15-5. Remove the key block assembly L. (See procedure 12)
15-6. Remove the five (5) screws marked [10D]. The PNL circuit board can then be removed. (Fig. 11)
15-7. Remove the four (4) screws marked [10E]. The LCD circuit board and the LCD unit can then be removed. (Fig. 11)

## 16. VR Circuit Board, PSW Circuit Board (Time required: About 5 minutes)

16-1. Remove the top board L assembly. (See procedure 2)
16-2. Remove the top board S assembly. (See procedure 5)
16-3. Remove the key cover assembly. (See procedure 6)
16-4. Remove the key stop rail assembly. (See procedure 11)
16-5. Remove the key block assembly R. (See procedure 13)
16-6. Remove the knob. (Fig. 12)
16-7. Remove the four (4) screws marked [7C]. The VR circuit board can then be removed. (Fig. 12)
16-8. Remove the four (4) screws marked [7D]. The PSW circuit board can then be removed. (Fig. 12)

● KEY BLOCK ASSEMBLY L

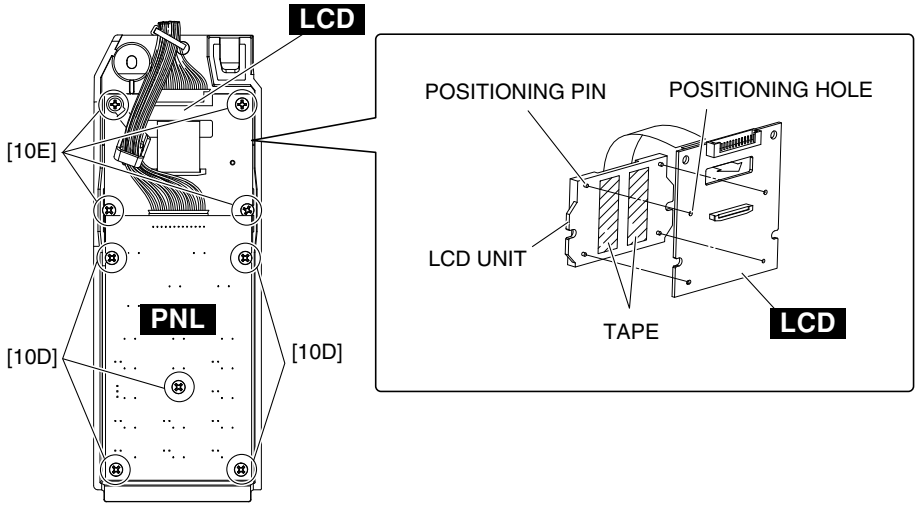


Fig. 11

● KEY BLOCK ASSEMBLY R

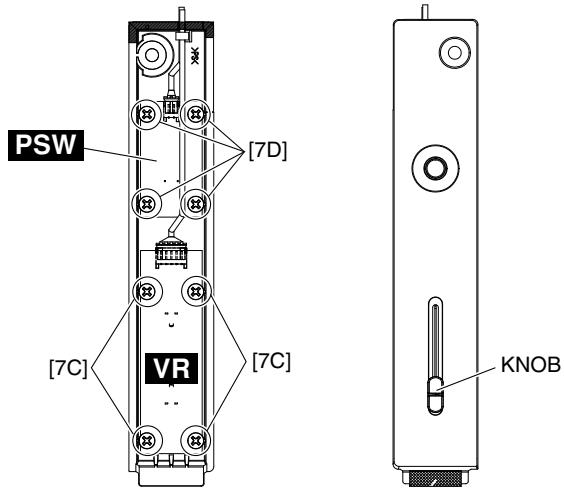


Fig. 12

## 17. Woofer (L, R)

**(Time required: About 2 minutes each)**

17-1. Remove the top board L assembly. (See procedure 2)

17-2. Remove the speaker grille assembly. (See procedure 4)

17-3. Remove the four (4) screws marked [S20A]. The woofer L can then be removed. (Fig. 13)

* ***The left and right woofer can then be removed in the same manner.***

## 18. Squawker (L, R)

**(Time required: About 3 minutes each)**

18-1. Remove the top board L assembly. (See procedure 2)

18-2. Remove the top board S assembly. (See procedure 5)

18-3. Remove the two (2) screws marked [7E]. The speaker assembly can then be removed. (Fig. 14)

* ***The left and right speaker assembly can then be removed in the same manner.***

18-4. Remove the four (4) screws marked [14b]. The squawker can then be removed. (Fig. 14)

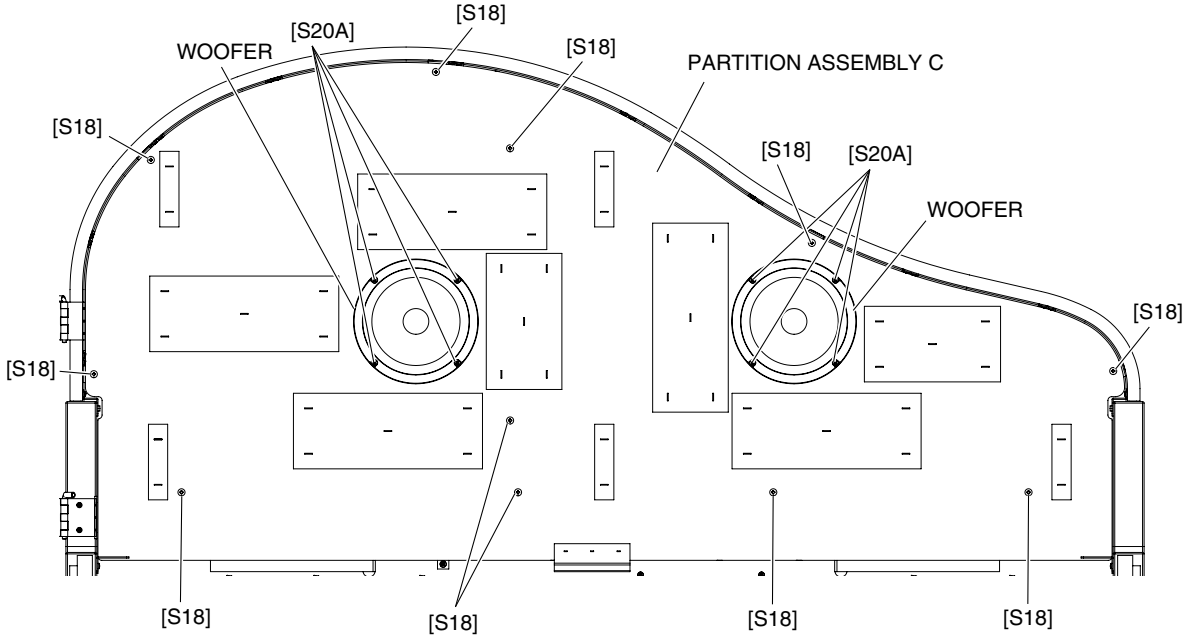


Fig. 13

● **TOP BOARD S ASSEMBLY**

**<Bottom view>**

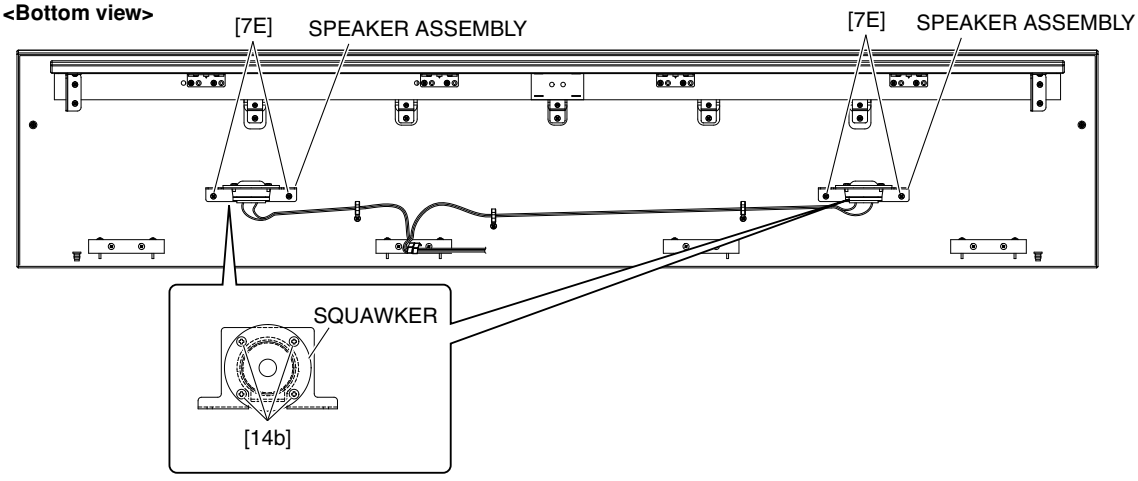


Fig. 14

## 19. Partition Assembly C
**(Time required: About 4 minutes)**

19-1. Remove the top board L assembly. (See procedure 2)
19-2. Remove the speaker grille assembly. (See procedure 4)
19-3. Remove the woofers (L, R) . (See procedure 17)
19-4. Remove the eleven (11) screws marked [S18]. The partition assembly C can then be removed. (Fig. 13)

## 20. Keyboard Assembly
**(Time required: About 6 minutes)**

20-1. Remove the top board L assembly. (See procedure 2)
20-2. Remove the top board S assembly. (See procedure 5)
20-3. Remove the key cover assembly. (See procedure 6)
20-4. Remove the key stop rail assembly. (See procedure 11)
20-5. Remove the key block assembly (L or R). (See procedure 12, 13)
20-6. Remove the two (2) screws marked [S20B] and the seven (7) screws marked [S04]. The keyboard assembly can then be removed. (Fig. 15)

## 21. Back Top Board Assembly
**(Time required: About 8 minutes)**

21-1. Remove the top board L assembly. (See procedure 2)
21-2. Remove the speaker grille assembly. (See procedure 4)
21-3. Remove the patition assembly C. (See procedure 19)
21-4. Remove the three (3) screws marked [S09A] and the three (3) screws marked [S09B]. (Fig. 16)
21-5. Remove the nine (9) screws marked [S23D]. The back top board assembly can then be removed. (Fig. 15)

## 22. Front Rail Assembly
**(Time required: About 8 minutes)**

22-1. Remove the top board L assembly. (See procedure 2)
22-2. Remove the top board S assembly. (See procedure 5)
22-3. Remove the key cover assembly. (See procedure 6)
22-4. Remove the key stop rail assembly. (See procedure 11)
22-5. Remove the key block assembly L. (See procedure 12)
22-6. Remove the key block assembly R. (See procedure 13)
22-7. Remove the keyboard assembly. (See procedure 20)

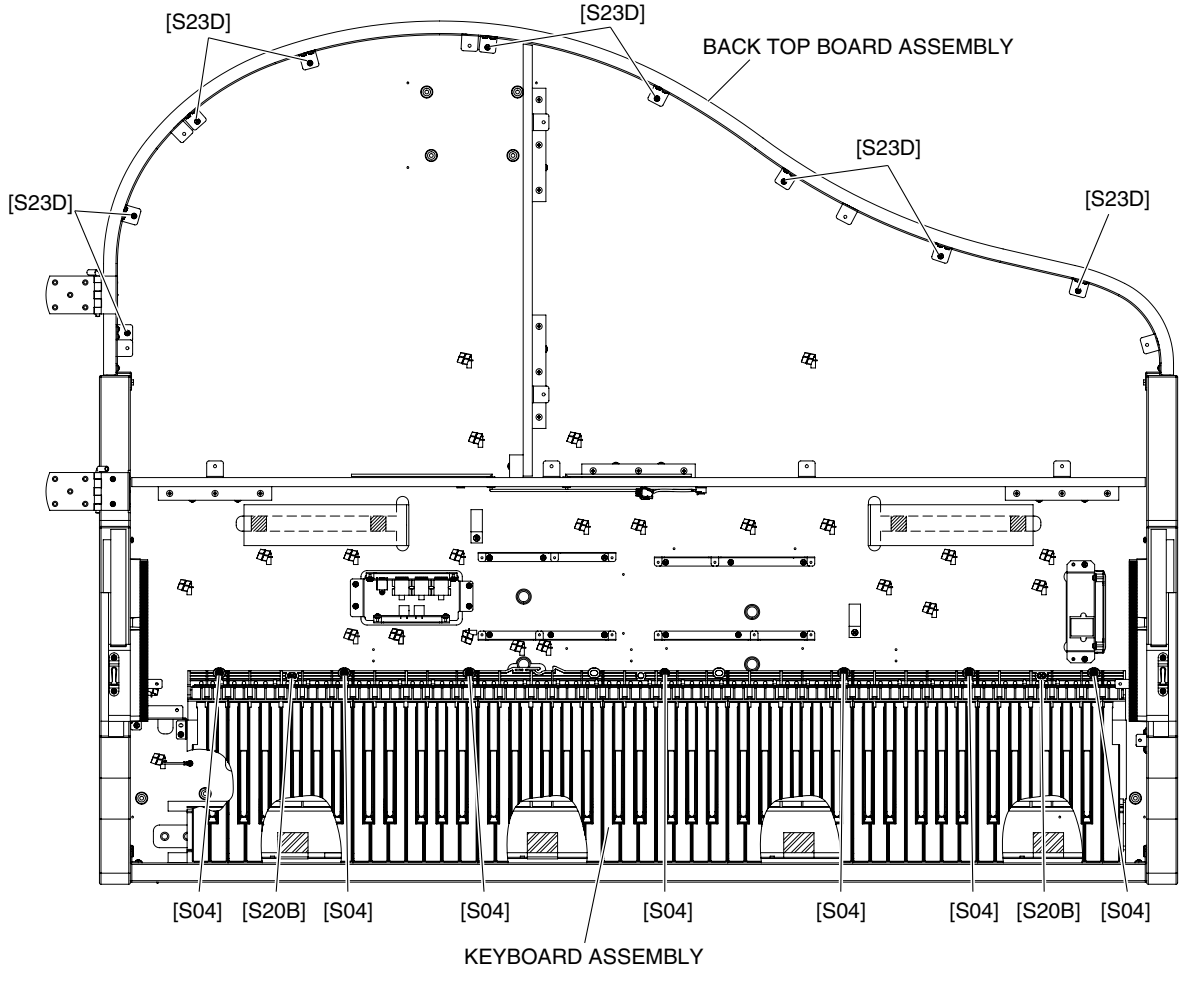

Fig. 15

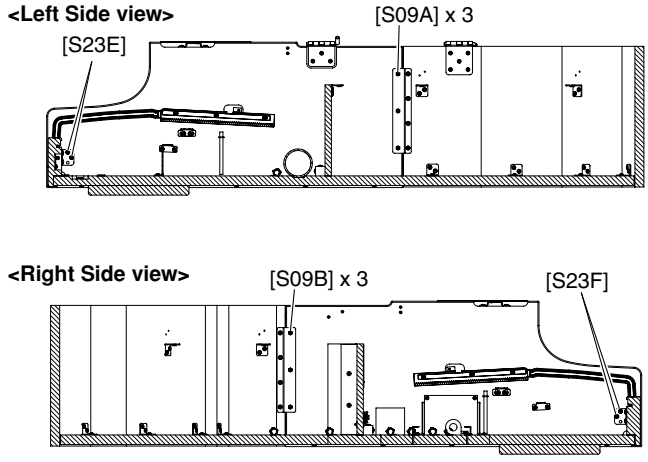


Fig. 16

22-8. Remove the two (2) screws marked [S23E] and the two (2) screws marked [S23F]. (Fig. 16)
22-9. Remove the nine (9) screws marked [S06A]. The front rail assembly can then be removed. (Fig. 6)

## 23. Arm Assembly (L, R)

**(Time required: About 9 minutes each)**

23-1. Remove the top board L assembly. (See procedure 2)
23-2. Remove the support bar and the support bar angle assembly. (See procedure 3)
23-3. Remove the speaker grille assembly. (See procedure 4)
23-4. Remove the patition assembly C. (See procedure 19)
23-5. Remove the top board S assembly. (See procedure 5)
23-6. Remove the key cover assembly. (See procedure 6)
23-7. Remove the key stop rail assembly. (See procedure 11)
23-8. Remove the key block assembly L. (See procedure 12)
23-9. Remove the key block assembly R. (See procedure 13)
23-10. Remove the keyboard assembly. (See procedure 20)
23-11. Remove the three (3) screws marked [S09A] and the two (2) screws marked [S23E]. (Fig. 16)
23-12. Remove the six (6) screws marked [S06B]. The arm assembly L can then be removed. (Fig. 6)

* ***The left and right arm assembly can then be removed in the same manner.***

## 24. Pedal Box Assembly, Pedal Assembly

**(Time required: About 3 minutes)**

24-1. Rotate the adjuster until it comes off the floor surface.
24-2. Disconnect the PK-LF cable. (Fig. 17)
24-3. Remove the four (4) screws marked [6b]. The pedal box assembly can then be removed. (Fig. 17)
24-4. Remove the nine (9) screws marked [5C]. The pedal assembly can then be removed. (Fig. 18)

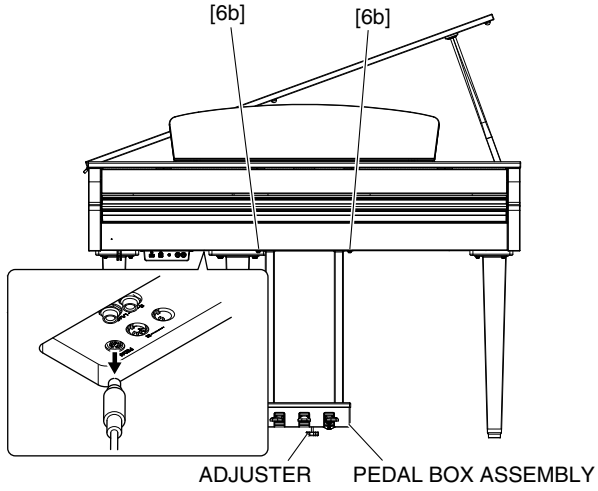


Fig. 17

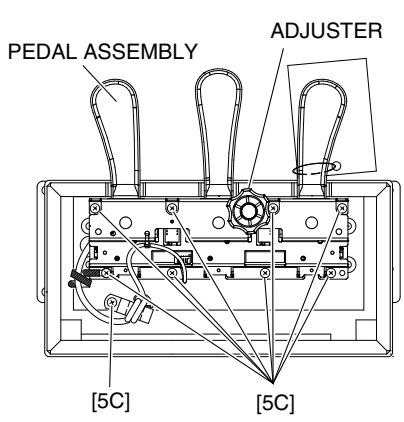


Fig. 18

## 25. PEDAL Circuit Board
**(Time required: About 6 minutes)**

25-1. Remove the pedal assembly. (See procedure 24)
25-2. Remove the adjuster. (Fig. 18)
25-3. Remove the three (3) screws marked [80A]. The three (3) pedal guides can then be removed as shown in Fig. 20. (Fig. 19, Fig. 20)
25-4. Remove the three (3) screws marked [80B]. (Fig. 19) Push down the pedal (damper) and then draw it forward. The sostenuto and left pedals can then be removed in the same manner. (Fig. 20)

**<Top view>**

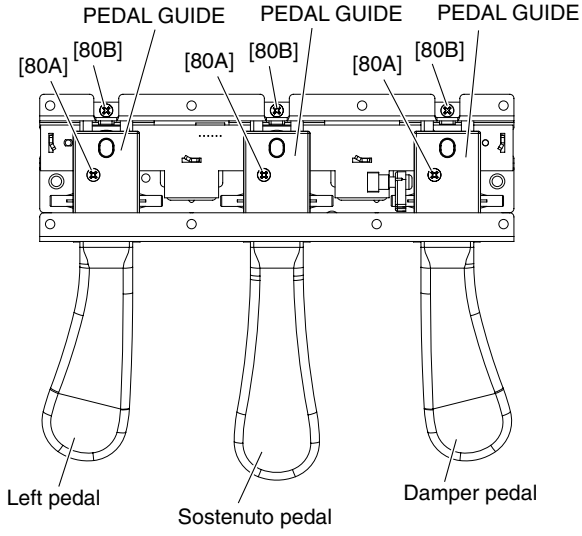


Fig. 19

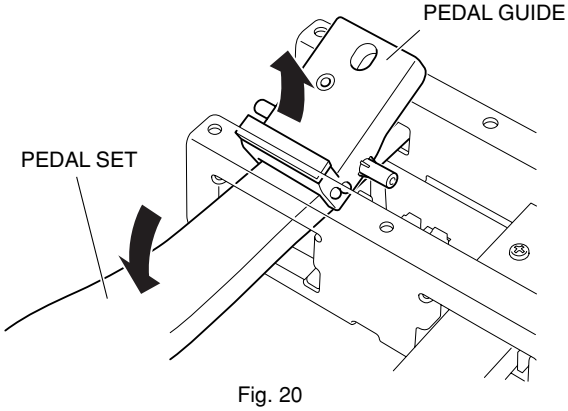


Fig. 20

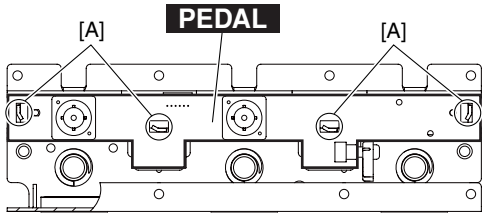


Fig. 21

25-5. Straighten the four (4) bent frame portions marked [A]. The pedal circuit board can then be removed. (Fig. 21)

## 26. Leg Assembly
**(Time required: About 2 minutes)**

* ***For safety, this work should be done by two persons.***
26-1. Lay the unit on the floor. (Fig. 22)
26-2. Remove the four (4) screws marked [6a]. The leg assembly can then be removed. (Fig. 23, Fig. 24)
* ***The front left, front right and rear leg assembly each can then be removed in the same manner.***

**How to position the main unit**

Spread a large soft cloth, such as a blanket, on the floor. Place the unit on the cloth with the key cover closed and the keyboard side on the bottom and lean the unit against the wall so that the unit will not fall or slip. Place a soft cloth against the wall to protect the instrument and the wall from scratches. Be sure to position the keyboard side on the bottom.

Refer to the diagram below to verify the orientation of the legs. (Fig. 24)

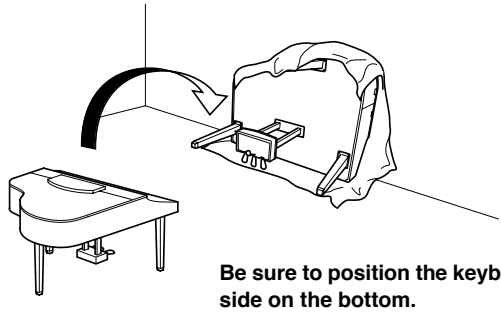

**Be sure to position the keyboard side on the bottom.**

Fig. 22

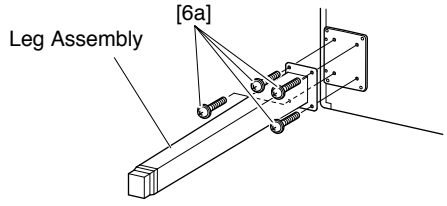


Fig. 23

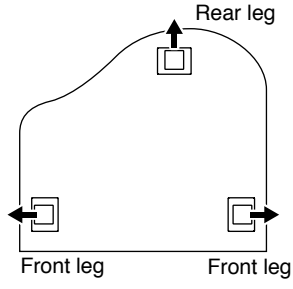


Fig. 24

## 27. Disassembling the Keyboard

* ***After inserting the round stick (Rod: TX000671) between the frame and the keys, remove the circuit boards. (Fig. 25)***

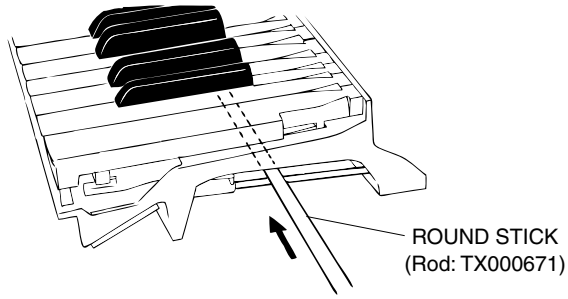


Fig. 25

27-1. **MK-L Circuit Board**

Remove the five (5) screws marked [260A] and the screw marked [262A]. The MK-L circuit board can then be removed. (Photo 3)

27-2. **MK-M Circuit Board**

Remove the four (4) screws marked [260B], the screw marked [262A] and the screw marked [262B]. The MK-M circuit board can then be removed. (Photo 3)

27-3. **MK-H Circuit Board**

Remove the five (5) screws marked [260C] and the screw marked [262B]. The MK-H circuit board can then be removed. (Photo 3)

* ***The keys can be removed without removing the circuit boards.***

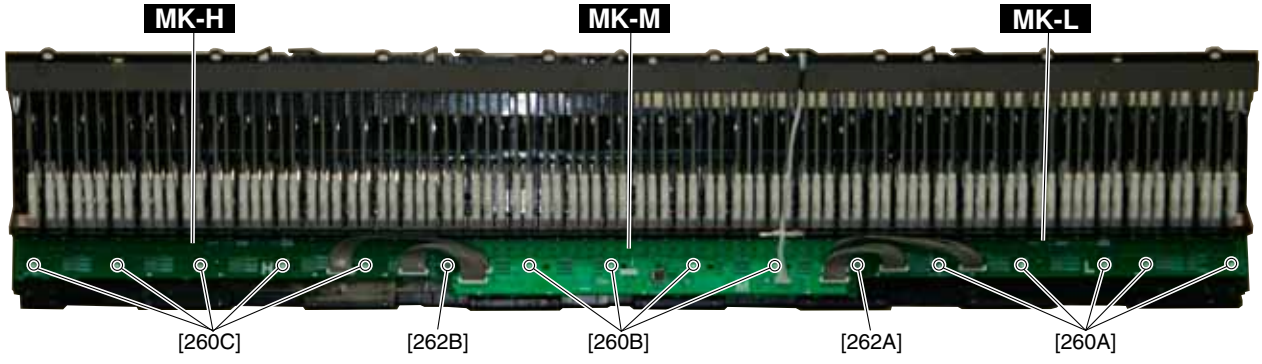


Photo 3

27-4. **Rubber Contact**

Remove the MK circuit board for the involved key. The rubber contacts can then be removed. (Photo 4, 5)




Photo 4

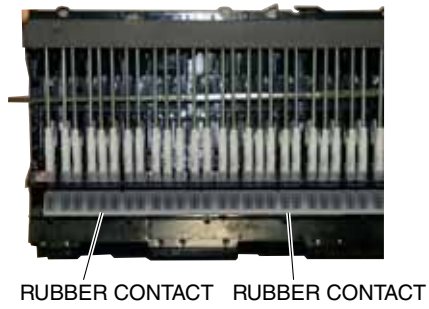


Photo 5

27-5. **White key**

In order to release the white key from the stopper, insert a thin plate between the white keys (gap in the direction indicated by the triangle mark, near the fulcrum of the key), press down the stopper marked [B] and move the white key forward. Then the white key being released from the stopper lifts up. (Fig. 26, 27)

* ***Use special care not to move the white key forward so much as to cause damage to the key spring.***

27-6. In this state, move the white key rearward a little. Then the white key can be removed. (Fig. 27)

27-7. **Black key**

The black key can be removed after the white keys on either side have been removed.

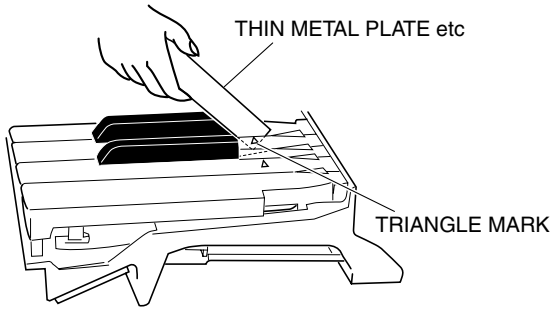


Fig. 26

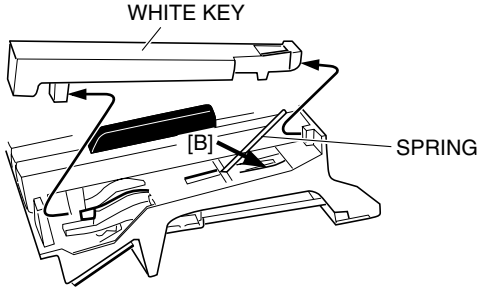


Fig. 27

27-8. **Actuate Rubber**

Remove the actuate rubber. (Fig. 28)

27-9. **Hammer, White Key**

After the white key has been removed, push the key spring down once to take it out of the hook. (Fig. 29)

Place the keyboard assembly upside-down and peel the stopper (L88_W) away. The hammer of the white key can then be removed. (Fig. 30)

* ***The hammer of the black key can then be removed in the same manner.***

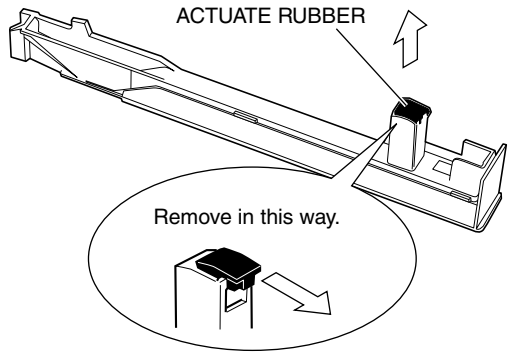


Fig. 28

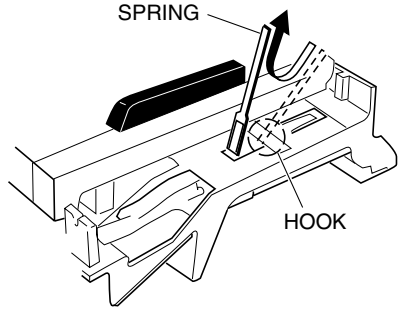


Fig. 29

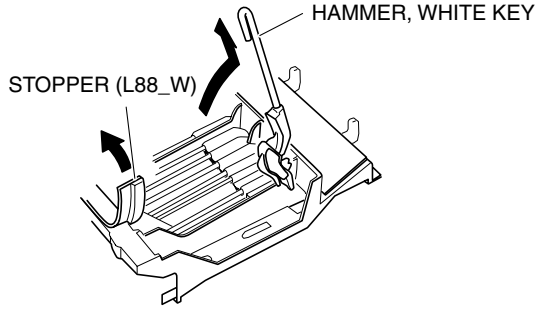


Fig. 30

## 28. Assembling the Keyboard

28-1. **Hammer, White Key (Hammer, Black Key)**

Place the keyboard assembly upside-down, insert the hammer assembly into the frame, and put the stopper (L88_W) on. (Fig. 31)

* ***There are eight (8) kinds of hammers that differ in weight.***

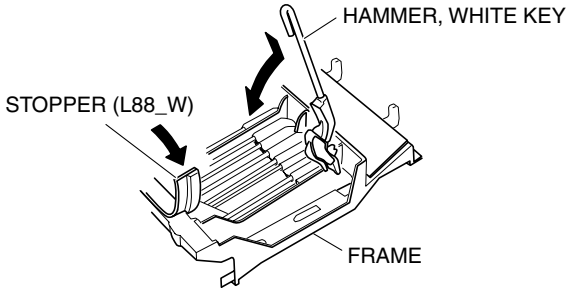


Fig. 31

28-2. **Spring**

Place the keyboard assembly with its face up. Align the end of the spring divided into two to the cut in the hammer of the key (white or black) and push it down once so that it is caught by the hook. (Fig. 32)

* ***Be careful of the direction of the spring. It should be installed with its projecting end facing upward. (Fig. 33)***

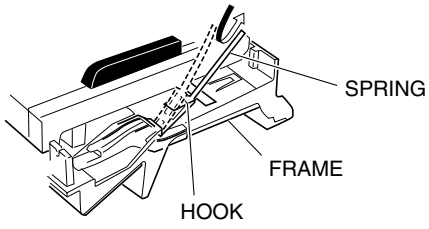


Fig. 32

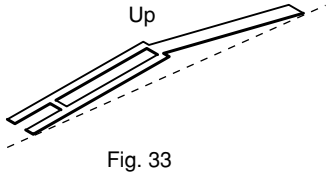


Fig. 33

28-3. **Assembling the White Key (Black Key)**

Fit the key (white or black) to part [D] and key guide, make sure that the spring is fixed securely into the spring receptacle inside of the supporting point of the key and then press down part [C] gradually. (Fig. 34)

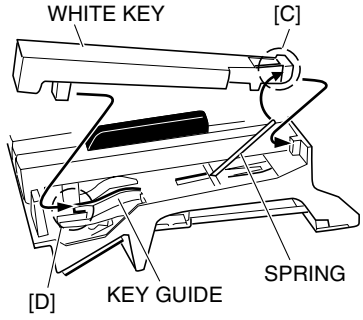


Fig. 34

28-4. **MK-L Circuit Board**

Tighten the five (5) screws marked [260A] and the screw marked [262A] to fix the MK-L circuit board. (Photo 3)

28-5. **MK-M Circuit Board**

Tighten the four (4) screws marked [260B], the screw marked [262A] and the screw marked [262B] to fix the MK-M circuit board. (Photo 3)

* ***When installing the MK-M circuit board, set it under hooks to align the triangle marks of the circuit board and projection parts of the frame as shown in photo 6.***

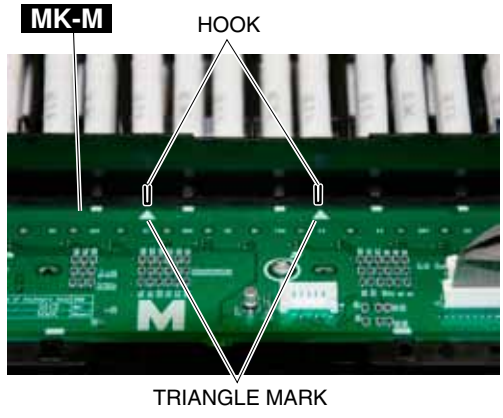


Photo 6

28-6. **MK-H Circuit Board**

Tighten the five (5) screws marked [260C] and the screw marked [262B] to fix the MK-H circuit board. (Photo 3)

# ■ LSI PIN DESCRIPTION

**AK4396VF-E2** (X8324A00) **DAC** (Digital to Analog Converter) .....24
**AK5381VT-E2** (X5219A0R) **ADC** (Analog to Digital Converter).....24
**R8A02042BG** (YC479A00) **CPU** (SWX08).....22
**TMP89FM42AUG-7GP2** (YC778C00) **E-GKS** .....21
**YDA164C-QZE2** (YD652A00) **DIGITAL AMP** (Digital Audio Power Amplifier) .....24
**YSS952-QZE2A** (YE441A00) **DSP (SPR-2)** (Digital Signal Processor).....21

## ● **TMP89FM42AUG-7GP2** (YC778C00) **E-GKS**

MK-M: IC1

| PIN NO. | NAME | I/O | FUNCTION | PIN NO. | NAME | I/O | FUNCTION |
|---|---|---|---|---|---|---|---|
| 1 | VSS | - | Ground | 23 | P42 | I/O | Port 42 |
| 2 | XIN | I | High frequency departure pendulum connection terminal | 24 | P43 | I/O | Port 43 |
| 3 | XOUT | O | High frequency departure pendulum connection terminal | 25 | P44 | I/O | Port 44 |
| 4 | MODE | I | Terminal for shipment examination. Please fix at "L" level. | 26 | P45 | I/O | Port 45 |
| 5 | VDD | - | Power supply +5D | 27 | P46 | I/O | Port 46 |
| 6 | P02 | I/O | Port 02 | 28 | P47 | I/O | Port 47 |
| 7 | P03 | I/O | Port 03 | 29 | P74 | I/O | Port 74 |
| 8 | /RESET | I | System reset input | 30 | P75 | I/O | Port 75 |
| 9 | P11 | I/O | Port 11 | 31 | P76 | I/O | Port 76 |
| 10 | P12 | I/O | Port 12 | 32 | P77 | I/O | Port 77 |
| 11 | P13 | I/O | Port 13 | 33 | P90 | I/O | Port 90 |
| 12 | P20 | I/O | Port 20 | 34 | P91 | I/O | Port 91 |
| 13 | P21 | I/O | Port 21 | 35 | P80 | I/O | Port 80 |
| 14 | P22 | I/O | Port 22/Serial clock I/O 0 | 36 | P81 | I/O | Port 81 |
| 15 | SDA0 | I/O | Serial bus data input/output | 37 | P70 | I/O | Port 70 |
| 16 | SCL0 | I/O | Serial bus data input/output | 38 | P71 | I/O | Port 71 |
| 17 | P25 | I/O | Port 25 | 39 | P72 | I/O | Port 72 |
| 18 | P26 | I/O | Port 16 | 40 | P73 | I/O | Port 73 |
| 19 | P27 | I/O | Port 27 | 41 | PB4 | I/O | Port B4 |
| 20 | VAREF/AVDD | | Analog, standard voltage input terminal for analog to digital translation/Power supply terminal for analogue | 42<br>43 | PB5<br>PB6 | I/O<br>I/O | Port B5<br>Port B6 |
| 21 | AIN0 | I | A/D converter analog input | 44 | PB7 | I/O | Port B7 |
| 22 | P41 | I/O | Port 41 | | | | |

## ● **YSS952-QZE2A** (YE441A00) **DSP (SPR-2)** (Digital Signal Processor)

DM: IC440

| PIN NO. | NAME | I/O | FUNCTION | PIN NO. | NAME | I/O | FUNCTION |
|---|---|---|---|---|---|---|---|
| 1 | GPIO5 | I/O | General-purpose I/O pins | 17 | OPEN | - | Leave this pin open |
| 2 | GPIO4 | I/O | | 18 | DVSS | - | GND |
| 3 | GPIO3 | I/O | | 19 | IRQ_N | O | Interrupt request output pin to the host controller |
| 4 | DVSS | - | GND | 20 | DVDD18 | - | Core power supply |
| 5 | GPIO2 | I | General-purpose I/O pins | 21 | GPIO11 | I/O | General-purpose I/O pins |
| 6 | GPIO1 | I | | 22 | TESTb | I | Test pin |
| 7 | GPIO0 | I | | 23 | DVSS | - | GND |
| 8 | PLLVDD | - | PLL power supply | 24 | OPEN | - | Leave this pin open |
| 9 | IC_N | I | Hardware reset pin | 25 | DVSS | - | GND |
| 10 | PLLVSS | - | PLL GND | 26 | GPIO10 | I/O | General-purpose I/O pins |
| 11 | PLLVSS | - | | 27 | GPIO9 | I/O | |
| 12 | XIN | I | Clock input pin | 28 | GPIO8 | I/O | |
| 13 | XOUT | O | Clock output pin | 29 | IOVDD | - | Control interface power supply |
| 14 | IOVDD | - | Control interface power supply | 30 | GPI07 | I/O | General-purpose I/O pins |
| 15 | SCL | I | $I^2C$ control bus clock input pin | 31 | DVDD18 | - | Core power supply |
| 16 | SDA | I/O | $I^2C$ control bus data I/O pin | 32 | GPI06 | I/O | General-purpose I/O pins |

## ● **R8A02042BG** (YC479A00) **CPU** (SWX08)

DM: IC100

| PIN NO. | NAME | I/O | FUNCTION | PIN NO. | NAME | I/O | FUNCTION |
|---|---|---|---|---|---|---|---|
| A1 | VSS | - | Ground (for I/O and for core) | E7 | VSS | - | Ground (for I/O and for core) |
| A2 | VSSADC | - | ADC analog ground | E8 | VCCQ | - | The power supply +3.3V |
| A3 | VCCADC | - | ADC analog power supply (Typ +3.3V) | E9 | VSS | - | Ground (for I/O and for core) |
| A4 | AN4 | I(a) | ADC analog input 4 | E10 | VCCQ | - | The power supply +3.3V |
| A5 | VREFADC | - | Analog module reference voltage. (Typ +3.3V) | E11 | VCCQ | - | The power supply +3.3V |
| A6 | SCK1 | Ish/O | External synchronous clock I/O 1 | E12 | VCCQ | - | The power supply +3.3V |
| A7 | UCLK | I | USB external clock input (48MHz) | E13 | VCCQ | - | The power supply +3.3V |
| A8 | VSS | - | Ground (for I/O and for core) | E14 | VSS | - | The power supply for internal cores(0V) |
| A9 | FUNC_DM | I/O(a) | USB function data - | E15 | VDD | - | The power supply +1.2V |
| A10 | VSS | - | Ground (for I/O and for core) | E16 | VDD | - | The power supply +1.2V |
| A11 | HOST_DM | I/O(a) | USB host data - (After hard reset is released, it becomes Low output status. ) | E17 | VCCQ | - | The power supply +3.3V |
| A12 | UCTL | I | USB output control (Make it to High when USB unused). | E18 | VCCQ | - | The power supply +3.3V |
| A13 | XTAL | O | Crystal oscillator output | E19 | WE3N/DQMUU/PH1 | O | D31-D24 at byte writing of D31-D24 (active Low)/SDRAM is selected/port H 1 |
| A14 | EXTAL | I | Crystal oscillator input (16.9344MHz) | E20 | A2 | O | SH2A-CPU address bus 2 |
| A15 | VSS | - | Ground (for I/O and for core) | E21 | D30/PF6 | I/O | SH2A-CPU data bus 30/port PF 6 |
| A16 | CS4N/PH4 | O | SH2A-CPU chip selection 4 (Low active)/port PH 4 | E22 | D29/PF5 | I/O | SH2A-CPU data bus 29/port PF 5 |
| A17 | TRSTN | Ish | JTAG test reset input (Low active) | F1 | MD5 | I/O | Wave ROM, SDRAM data bus 5 |
| A18 | TDO | O | JTAG test data output | F2 | MD4 | I/O | Wave ROM, SDRAM data bus 4 |
| A19 | PA2 | I/O | Parallel port A 2 | F3 | MD12 | I/O | Wave ROM, SDRAM data bus 12 |
| A20 | PA0 | I/O | Parallel port A 0 | F4 | MD11 | I/O | Wave ROM, SDRAM data bus 11 |
| A21 | IRQ1 | Ish | Interrupt input 1 | F5 | VDD | - | The power supply +1.2V |
| A22 | VCCQ | - | The power supply +3.3V | F18 | VDD | - | The power supply +1.2V |
| B1 | MA1 | O | Wave ROM, SDRAM address bus 1 | F19 | A3 | O | SH2A-CPU address bus 3 |
| B2 | VSS | - | Ground (for I/O and for core) | F20 | A4 | O | SH2A-CPU address bus 4 |
| B3 | AN5 | I(a) | ADC analog input 5 | F21 | D28/PF4 | I/O | SH2A-CPU data bus 28/port PF 4 |
| B4 | AN2 | I(a) | ADC analog input 2 | F22 | D27/PF3 | I/O | SH2A-CPU data bus 27/port PF 3 |
| B5 | AN0 | I(a) | ADC analog input 0 | G1 | MD7 | I/O | Wave ROM, SDRAM data bus 7 |
| B6 | TxD1 | O | Serial output 1 | G2 | MD6 | I/O | Wave ROM, SDRAM data bus 6 |
| B7 | TxD0 | O | Serial output 0 | G3 | MD14 | I/O | Wave ROM, SDRAM data bus 14 |
| B8 | VSS | - | Ground (for I/O and for core) | G4 | MD13 | I/O | Wave ROM, SDRAM data bus 13 |
| B9 | FUNC_DP | I/O(a) | USB function data + | G5 | VSS | - | Ground (for I/O and for core) |
| B10 | VSS | - | Ground (for I/O and for core) | G18 | VSS | - | Ground (for I/O and for core) |
| B11 | HOST_DP | I/O(a) | USB host data + (After hard reset is released, it becomes Low output status. ) | G19 | A5 | O | SH2A-CPU address bus 5 |
| B12 | SCL | Ish/OD | E bus (I2C) clock I/O (5V tolerant) | G20 | A6 | O | SH2A-CPU address bus 6 |
| B13 | CS0N | O | SH2A-CPU chip selection 0 (Low active) | G21 | D26/PF2 | I/O | SH2A-CPU data bus 26/port PF 2 |
| B14 | CS3N | O | SH2A-CPU chip selection 3 (Low active) | G22 | D25/PF1 | I/O | SH2A-CPU data bus 25/port PF 1 |
| B15 | CS6N/PH5 | O | SH2A-CPU chip selection 6 (Low active)/port PH 5 | H1 | MA25/SCASN | O | Wave ROM, SDRAM address bus 25/CAS output for wave SDRAM (Low active) |
| B16 | ASEBRKAKN | Ish/O | Emulator break (Low active) | H2 | MA26/SCKE | O | Wave ROM, SDRAM address bus 26/Wave SDRAM clock is enable |
| B17 | TMS | I | JTAG test mode selection input | H3 | MA17/NFD1 | O/, I/O | Wave ROM, SDRAM address bus 17/Wave NAND flash data bus 1 |
| B18 | PA5 | I/O | Parallel port A 5 | H4 | MD15 | I/O | Wave ROM, SDRAM data bus 15 |
| B19 | PA1 | I/O | Parallel port A 1 | H5 | VCCQ | - | The power supply +3.3V |
| B20 | IRQ0 | Ish | Interrupt input 0 | H18 | VCCQ | - | The power supply +3.3V |
| B21 | VCCQ | - | The power supply +3.3V | H19 | A7 | O | SH2A-CPU address bus 7 |
| B22 | VDDPLL2 | - | PLL1 analog power supply (Typ. +1.2V) | H20 | A8 | O | SH2A-CPU address bus 8 |
| C1 | MRDN/SDQM | O | Wave ROM enable read (Low active)/Waves SDRAM data is enable | H21 | D24/PF0 | I/O | SH2A-CPU data bus 24/port PF 0 |
| C2 | MCS0N | O | Wave ROM, SDRAM chip selection 0 (Low active) | H22 | D23/PE7 | I/O | SH2A-CPU data bus 23/port PE 7 |
| C3 | VSS | - | Ground (for I/O and for core) | J1 | MA15 | O | Wave ROM, SDRAM address bus 15(SDRAM bank selection 1) |
| C4 | AN3 | I(a) | ADC analog input 3 | J2 | MA16/NFD0 | O/, I/O | Wave ROM, SDRAM address bus 16/Wave NAND flash data bus 0 |
| C5 | AN1 | I(a) | ADC analog input 1 | J3 | MA23/NFD7 | O/, I/O | Wave ROM, SDRAM address bus 23/Wave NAND flash data bus 7 |
| C6 | RxD1 | Ish | Serial input 1 | J4 | MA24/SRASN | O | Wave ROM, SDRAM address bus 24/RAS output for wave SDRAM (Low active) |
| C7 | RxD0 | Ish | Serial input 0 | J5 | VSS | - | Ground (for I/O and for core) |
| C8 | VSS | - | Ground (for I/O and for core) | J9 | VSS | - | Ground (for I/O and for core) |
| C9 | VBUS | I | USB cable connection monitor (5V tolerant) | J10 | VSS | - | Ground (for I/O and for core) |
| C10 | VSS | - | Ground (for I/O and for core) | J11 | VSS | - | Ground (for I/O and for core) |
| C11 | OVER_CURRENT_N | I | USB overcurrent detection (Low active) (5V tolerant) | J12 | VSS | - | Ground (for I/O and for core) |
| C12 | EICN | I | E bus reset output (Low active) (5V tolerant) | J13 | VSS | - | Ground (for I/O and for core) |
| C13 | CS1N/PH2 | O | SH2A-CPU chip selection 1 (Low active)/port PH 2 | J14 | VSS | - | Ground (for I/O and for core) |
| C14 | CS5N | O | SH2A-CPU chip selection 5 (Low active) | J18 | VSS | - | Ground (for I/O and for core) |
| C15 | ASEMDN | Ish | Debug mode setting (Low active) | J19 | A9 | O | SH2A-CPU address bus 9 |
| C16 | TDI | I | JTAG test data input | J20 | A10 | O | SH2A-CPU address bus 10 |
| C17 | PA7 | I/O | Parallel port A 7 | J21 | D22/PE6 | I/O | SH2A-CPU data bus 22/port PE 6 |
| C18 | PA4 | I/O | Parallel port A 4 | J22 | D21/PE5 | I/O | SH2A-CPU data bus 21/port PE 5 |
| C19 | WAITN | I | External wait input (Low active) | K1 | MA11 | O | Wave ROM, SDRAM address bus 11 |
| C20 | VCCQ | - | The power supply +3.3V | K2 | MA12 | O | Wave ROM, SDRAM address bus 12 |
| C21 | VSSPLL2 | - | The power supply for SH2A PLL analog modules(0V) | K3 | MA13 | O | Wave ROM, SDRAM address bus 13(When 256Mbit SDRAM is connected, use it. ) |
| C22 | VDDPLL1 | - | The Jlower supply for SH2A PLL. analog modules(1.2V) | K4 | MA14 | O | Wave ROM, SDRAM address bus 14(SDRAM bank selection 0) |
| D1 | MD1 | I/O | Wave ROM, SDRAM data bus 1 | K5 | VDD | - | The power supply +1.2V |
| D2 | MD0 | I/O | Wave ROM , SDRAM data bus 0 | K9 | VSS | - | Ground (for I/O and for core) |
| D3 | MD8 | I/O | Wave ROM, SDRAM data bus 8 | K10 | VSS | - | Ground (for I/O and for core) |
| D4 | VSS | - | Ground (for I/O and for core) | K11 | VSS | - | Ground (for I/O and for core) |
| D5 | VDD | - | The power supply +1.2V | K12 | VSS | - | Ground (for I/O and for core) |
| D6 | VSS | - | Ground (for I/O and for core) | K13 | VSS | - | Ground (for I/O and for core) |
| D7 | RESN | Ish | Hardware reset (Low active) | K14 | VSS | - | Ground (for I/O and for core) |
| D8 | VCCQ | - | The power supply +3.3V | K18 | VDD | - | The power supply +1.2V |
| D9 | PULLUP_ENB | O | The USB pull-up is enable. | K19 | A11 | O | SH2A-CPU address bus 11 |
| D10 | VCCQ | - | The power supply +3.3V | K20 | A12 | O | SH2A-CPU address bus 12 |
| D11 | POWER_ENB | O | The USB voltage is enable. | K21 | D20/PE4 | I/O | SH2A-CPU data bus 20/port PE 4 |
| D12 | SDA | Ish/OD | E bus (I2C) data I/O (5V tolerant) | K22 | D19/PE3 | I/O | SH2A-CPU data bus 19/port PE 3 |
| D13 | CS2N/PH3 | O | SH2A-CPU chip selection 2 (Low active)/port PH 3 | L1 | MA22/NFD6 | O/, I/O | Wave ROM, SDRAM address bus 22/Wave NAND flash data bus 6 |
| D14 | CS7N | O | SH2A-CPU chip selection 7 (Low active) | L2 | MA21/NFD5 | O/, I/O | Wave ROM, SDRAM address bus 21/Wave NAND flash data bus 5 |
| D15 | TESTN | Ish | Test input (Low active) | L3 | MA20/NFD4 | O/, I/O | Wave ROM, SDRAM address bus 20/Wave NAND flash data bus 4 |
| D16 | TCK | I | JTAG test clock input | L4 | MA9 | O | Wave ROM, SDRAM address bus 9 |
| D17 | PA6 | I/O | Parallel port A 6 | L5 | MA10 | O | Wave ROM, SDRAM address bus 10 |
| D18 | PA3 | I/O | Parallel port A 3 | L9 | VSS | - | Ground (for I/O and for core) |
| D19 | VCCQ | - | The power supply +3.3V | L10 | VSS | - | Ground (for I/O and for core) |
| D20 | A0 | O | SH2A-CPU address bus 0 | L11 | VSS | - | Ground (for I/O and for core) |
| D21 | VSSPLL1 | - | PLL analog ground (0V) | L12 | VSS | - | Ground (for I/O and for core) |
| D22 | D31/PF7 | I/O | SH2A-CPU data bus 31/port PF 7 | L13 | VSS | - | Ground (for I/O and for core) |
| E1 | MD3 | I/O | Wave ROM, SDRAM data bus 3 | L14 | VSS | - | Ground (for I/O and for core) |
| E2 | MD2 | I/O | Wave ROM, SDRAM data bus 2 | L18 | CKE | O | The clock is enable for SDRAM |
| E3 | MD10 | I/O | Wave ROM, SDRAM data bus 10 | L19 | A13 | O | SH2A-CPU address bus 13 |
| E4 | MD9 | I/O | Wave ROM, SDRAM data bus 9 | L20 | A14 | O | SH2A-CPU address bus 14 |
| E5 | VSS | - | Ground (for I/O and for core) | L21 | D18/PE2 | I/O | SH2A-CPU data bus 18/port PE 2 |
| E6 | VDD | - | The power supply +1.2V | L22 | D17/PE1 | I/O | SH2A-CPU data bus 17/port PE 1 |

| PIN NO. | NAME | I/O | FUNCTION | PIN NO. | NAME | I/O | FUNCTION |
|---|---|---|---|---|---|---|---|
| M1 | MA19/NFD3 | O/, I/O | Wave ROM, SDRAM address bus 19/Wave NAND flash data bus 3 | V17 | VDD | - | The power supply +1.2V |
| M2 | MA18/NFD2 | O/, I/O | Wave ROM, SDRAM address bus 18/Wave NAND flash data bus 2 | V18 | VCCQ | - | The power supply +3.3V |
| M3 | MA8 | O | Wave ROM, SDRAM address bus 8 | V19 | A24 | O | SH2A-CPU address bus 24 |
| M4 | MA7 | O | Wave ROM, SDRAM address bus 7 | V20 | A23 | O | SH2A-CPU address bus 23 |
| M5 | MA6 | O | Wave ROM, SDRAM address bus 6 | V21 | D5 | I/O | SH2A-CPU data bus 5 |
| M9 | VSS | - | Ground (for I/O and for core) | V22 | D6 | I/O | SH2A-CPU data bus 6 |
| M10 | VSS | - | Ground (for I/O and for core) | W1 | PB6 | I/O | Parallel port B 6 |
| M11 | VSS | - | Ground (for I/O and for core) | W2 | PB7 | I/O | Parallel port B 7 |
| M12 | VSS | - | Ground (for I/O and for core) | W3 | ED0/PC0 | I/O | External CPU data bus 0/Port C 0 |
| M13 | VSS | - | Ground (for I/O and for core) | W4 | VDD | - | The power supply +1.2V |
| M14 | VSS | - | Ground (for I/O and for core) | W5 | ED10/PD2 | I/O | External CPU data bus 10/Port D 2 |
| M18 | A1 | O | SH2A-CPU address bus 1 | W6 | ED14/PD6 | I/O | External CPU data bus 14/Port D 6 |
| M19 | WE2N/DQMUL/PH0 | O | D23-D16 at byte writing of D23-D16 (active Low)/SDRAM is selected/port H 0 | W7 | EA3/PK2 | I/O | External CPU address bus 3/Port K 2 |
| M20 | CASLN | O | CAS output for SDRAM (Low active) | W8 | RDQ1 | I/O | SDRAM data bus 1 for DSP |
| M21 | D16/PE0 | I/O | SH2A-CPU data bus 16/port PE 0 | W9 | RDQ3 | I/O | SDRAM data bus 3 for DSP |
| M22 | VSS | - | The power supply for internal cores(0V) | W10 | RDQ5 | I/O | SDRAM data bus 5 for DSP |
| N1 | MA5 | O | Wave ROM, SDRAM address bus 5 | W11 | RDQ7 | I/O | SDRAM data bus 7 for DSP |
| N2 | MA4 | O | Wave ROM, SDRAM address bus 4 | W12 | RRASN | O | RAS output of SDRAM for DSP (Low active) |
| N3 | MA3 | O | Wave ROM, SDRAM address bus 3 | W13 | RA11 | O | SDRAM address bus 11 for DSP |
| N4 | MA2 | O | Wave ROM, SDRAM address bus 2 | W14 | RA2 | O | SDRAM address bus 2 for DSP |
| N5 | VDD | - | The power supply +1.2V | W15 | RA4 | O | SDRAM address bus 4 for DSP |
| N9 | VSS | - | Ground (for I/O and for core) | W16 | AUXI/DREQ3/PK7 | I | AUX input/DMA forwarding demand input from external device to channel 3/Port K7 |
| N10 | VSS | - | Ground (for I/O and for core) | W17 | SDI0/PK5 | I | Serial audio input 0/port K5 |
| N11 | VSS | - | Ground (for I/O and for core) | W18 | BW_MD0 | I | Setting of width of SH2A-CPU data bus |
| N12 | VSS | - | Ground (for I/O and for core) | W19 | VCCQ | - | The power supply +3.3V |
| N13 | VSS | - | Ground (for I/O and for core) | W20 | A25 | O | SH2A-CPU address bus 25 |
| N14 | VSS | - | Ground (for I/O and for core) | W21 | D3 | I/O | SH2A-CPU data bus 3 |
| N18 | VDD | - | The power supply +1.2V | W22 | D4 | I/O | SH2A-CPU data bus 4 |
| N19 | RASLN | O | RAS output for SDRAM (Low active) | Y1 | ED1/PC1 | I/O | External CPU data bus 1/Port C 1 |
| N20 | WE1N/DQMLU | O | D15-D8 at byte writing of D15-D8 (active Low)/SDRAM is selected | Y2 | ED2/PC2 | I/O | External CPU data bus 2/Port C 2 |
| N21 | D15 | I/O | SH2A-CPU data bus 15 | Y3 | VDD | - | The power supply for internal cores(1.2V) |
| N22 | CKIO | O | Clock output for SDRAM | Y4 | ED7/PC7 | I/O | External CPU data bus 7/Port C 7 |
| P1 | MWRN | O | Wave ROM, SDRAM write enable (Low active) | Y5 | ED11/PD3 | I/O | External CPU data bus 11/Port D 3 |
| P2 | MCS1N/PG0 | O | Wave ROM, SDRAM chip selection 1 (Low active)/port G 0 | Y6 | ED15/PD7 | I/O | External CPU data bus 15/Port D 7 |
| P3 | MCS3N/MA27/PG2 | O | Wave ROM, SDRAM chip selection 3 (Low active)/Wave ROM address bus 27/port G 2 | Y7 | ERDN/PK3 | I/O | External CPU read is enable (Low active)/Port K 3 |
| P4 | BTCHG | Ish | Switch control of boot ROM | Y8 | RDQ2 | I/O | SDRAM data bus 2 for DSP |
| P5 | VSS | - | Ground (for I/O and for core) | Y9 | RDQ4 | I/O | SDRAM data bus 4 for DSP |
| P9 | VSS | - | Ground (for I/O and for core) | Y10 | RDQ6 | I/O | SDRAM data bus 6 for DSP |
| P10 | VSS | - | Ground (for I/O and for core) | Y11 | RWEN | O | WE output of SDRAM for DSP (Low active) |
| P11 | VSS | - | Ground (for I/O and for core) | Y12 | RCASN | O | CAS output of SDRAM for DSP (Low active) |
| P12 | VSS | - | Ground (for I/O and for core) | Y13 | RBS | O | SDRAM bank selection for DSP |
| P13 | VSS | - | Ground (for I/O and for core) | Y14 | RA1 | O | SDRAM address bus 1 for DSP |
| P14 | VSS | - | Ground (for I/O and for core) | Y15 | RA3 | O | SDRAM address bus 3 for DSP |
| P18 | VSS | - | Ground (for I/O and for core) | Y16 | DITO/PH7 | O | Digital audio output/Port H7 |
| P19 | A16 | O | SH2A-CPU address bus 16 | Y17 | SYI | Ish | Synchronous input from external device |
| P20 | A15 | O | SH2A-CPU address bus 15 | Y18 | SDI1/DREQ2/PK6 | I | Serial audio input 1/DMA forwarding demand input from external device to channel2/Port K5 |
| P21 | D13 | I/O | SH2A-CPU data bus 13 | Y19 | SDO0 | O | Serial audio output 0 |
| P22 | D14 | I/O | SH2A-CPU data bus 14 | Y20 | VCCQ | - | The power supply +3.3V |
| R1 | MCS2N/MA28/PG1 | O | Wave ROM, SDRAM chip selection 2 (Low active)/Wave ROM address bus 28/port G 1 | Y21 | D1 | I/O | SH2A-CPU data bus 1 |
| R2 | NFCSN | O | Wave NAND flash chip is enable (Low active) | Y22 | D2 | I/O | SH2A-CPU data bus 2 |
| R3 | NFRDY | I | Ready input for wave NAND flash | AA1 | ED3/PC3 | I/O | External CPU data bus 3/Port C 3 |
| R4 | NFRDFB | Ish | Wave NAND flash data taking read enable input | AA2 | VDD | - | The power supply +1.2V |
| R5 | VCCQ | - | The power supply +3.3V | AA3 | ED5/PC5 | I/O | External CPU data bus 5/Port C 5 |
| R18 | VCCQ | - | The power supply +3.3V | AA4 | ED8/PD0 | I/O | External CPU data bus 8/Port D 0 |
| R19 | A18 | O | SH2A-CPU address bus 18 | AA5 | ED12/PD4 | I/O | External CPU data bus 12/Port D 4 |
| R20 | A17 | O | SH2A-CPU address bus 17 | AA6 | EA1/PK0 | I/O | External CPU address bus 1/Port K 0 |
| R21 | D11 | I/O | SH2A-CPU data bus 11 | AA7 | EWRN/PK4 | I/O | External CPU write is enable (Low active)/Port K 4 |
| R22 | D12 | I/O | SH2A-CPU data bus 12 | AA8 | RDQ15 | I/O | SDRAM data bus 15 for DSP |
| T1 | SCLK | O | Clock output for wave SDRAM | AA9 | RDQ13 | I/O | SDRAM data bus 13 for DSP |
| T2 | NFRDN/PG3 | O | Wave NAND flash enable read (Low active)/port G 3 | AA10 | RDQ11 | I/O | SDRAM data bus 11 for DSP |
| T3 | NFWEN/PG4 | O | Wave NAND flash enable write (Low active)/port G 4 | AA11 | RDQ9 | I/O | SDRAM data bus 9 for DSP |
| T4 | NFWPN/PG5 | O | Wave NAND write-protect (Low active)/port G 5 | AA12 | RCLK | O | SDRAM clock output for DSP |
| T5 | VSS | - | The power supply for internal cores(0V) | AA13 | RA12 | O | SDRAM address bus 12 for DSP |
| T18 | VSS | - | The power supply for internal cores(0V) | AA14 | RA9 | O | SDRAM address bus 9 for DSP |
| T19 | A20 | O | SH2A-CPU address bus 20 | AA15 | RA7 | O | SDRAM address bus 7 for DSP |
| T20 | A19 | O | SH2A-CPU address bus 19 | AA16 | RA5 | O | SDRAM address bus 5 for DSP |
| T21 | D9 | I/O | SH2A-CPU data bus 9 | AA17 | WCLK2/SDO3 | O | Word clock output 2/Serial audio output 3 |
| T22 | D10 | I/O | SH2A-CPU data bus 10 | AA18 | BCLK | O | Bit clock output (After hard reset is released, the H/L change is started) |
| U1 | NFALE/PG6 | O | Wave NAND flash address is enable/port G 6 | AA19 | SDO1 | O | Serial audio output 1 |
| U2 | NFCLE/PG7 | O | Wave NAND flash command is enable/port G 7 | AA20 | RDWRN | O | The SH2A-CPU read write is enable |
| U3 | PB0 | I/O | Parallel port B 0 | AA21 | VCCQ | - | The power supply +3.3V |
| U4 | PB1 | I/O | Parallel port B 1 | AA22 | D0 | I/O | SH2A-CPU data bus 0 |
| U5 | VDD | - | The power supply +1.2V | AB1 | VDD | - | The power supply +1.2V |
| U18 | VCCQ | - | The power supply +3.3V | AB2 | ED4/PC4 | I/O | External CPU data bus 4/Port C 4 |
| U19 | A22 | O | SH2A-CPU address bus 22 | AB3 | ED6/PC6 | I/O | External CPU data bus 6/Port C 6 |
| U20 | A21 | O | SH2A-CPU address bus 21 | AB4 | ED9/PD1 | I/O | External CPU data bus 9/Port D 1 |
| U21 | D7 | I/O | SH2A-CPU data bus 7 | AB5 | ED13/PD5 | I/O | External CPU data bus 13/Port D 5 |
| U22 | D8 | I/O | SH2A-CPU data bus 8 | AB6 | EA2/PK1 | I/O | External CPU address bus 2/Port K 1 |
| V1 | PB2 | I/O | Parallel port B 2 | AB7 | ECSN | Ish | External CPU chip selection |
| V2 | PB3 | I/O | Parallel port B 3 | AB8 | RDQ14 | I/O | SDRAM data bus 14 for DSP |
| V3 | PB4 | I/O | Parallel port B 4 | AB9 | RDQ12 | I/O | SDRAM data bus 12 for DSP |
| V4 | PB5 | I/O | Parallel port B 5 | AB10 | RDQ10 | I/O | SDRAM data bus 10 for DSP |
| V5 | VDD | - | The power supply +1.2V | AB11 | RDQ8 | I/O | SDRAM data bus 8 for DSP |
| V6 | VDD | - | The power supply +1.2V | AB12 | RDQM | O | SDRAM mask output for DSP |
| V7 | VSS | - | Ground (for I/O and for core) | AB13 | RA13 | O | SDRAM address bus 13 for DSP |
| V8 | RDQ0 | I/O | SDRAM data bus 0 for DSP | AB14 | RA10 | O | SDRAM address bus 10 for DSP |
| V9 | VSS | - | Ground (for I/O and for core) | AB15 | RA8 | O | SDRAM address bus 8 for DSP |
| V10 | VCCQ | - | The power supply +3.3V | AB16 | RA6 | O | SDRAM address bus 6 for DSP |
| V11 | VCCQ | - | The power supply +3.3V | AB17 | SYSCLK | O | System clock output (After hard reset is released, the H/L change is started) |
| V12 | VCCQ | - | The power supply +3.3V | AB18 | WCLK | O | Word clock output (After hard reset is released, the H/L change is started) |
| V13 | VCCQ | - | The power supply +3.3V | AB19 | SYSCLK2/SDO2/PH6 | O | System clock output 2: For TI Co. DAC/Serial audio input 2/Port H 6 |
| V14 | VSS | - | Ground (for I/O and for core) | AB20 | RDN | O | The SH2A-CPU read is enable (Low active) |
| V15 | VCCQ | - | The power supply +3.3V | AB21 | WE0N/DQMLL | O | D7-D0 at byte writing of D7-D0 (active Low)/SDRAM is selected |
| V16 | CKOEN | I | Clock output control for SDRAM | AB22 | VCCQ | - | The power supply +3.3V |

## • **AK5381VT-E2** (X5219A0R) **ADC** (Analog to Digital Converter)

DM: IC401

| PIN NO. | NAME | I/O | FUNCTION | PIN NO. | NAME | I/O | FUNCTION |
|---|---|---|---|---|---|---|---|
| 1 | AINR | I | Rch Analog input pin | 9 | SDTO | O | Audio serial data output pin |
| 2 | AINL | I | Lch Analog input pin | 10 | LRCK | I/O | Output channel clock pin |
| 3 | CKS1 | I | Mode select 1 pin | 11 | MCLK | I | Master clock input pin |
| 4 | VCOM | O | Common voltage output pin | 12 | SCLK | I/O | Audio serial data clock pin |
| 5 | AGND | - | Analog ground | 13 | PDN | I | Power down mode pin |
| 6 | VA | - | Analog power supply | 14 | DIF | I | Audio interface format pin |
| 7 | VD | - | Digital power supply | 15 | CKS2 | I | Mode select 2 pin |
| 8 | DGND | - | Digital ground | 16 | CKS0 | I | Mode select 0 pin |

## • **AK4396VF-E2** (X8324A00) **DAC** (Digital to Analog Converter)

DM: IC400

| PIN NO. | NAME | I/O | FUNCTION | PIN NO. | NAME | I/O | FUNCTION |
|---|---|---|---|---|---|---|---|
| 1 | $DV_{SS}$ | - | Digital ground | 15 | TTL | I | CMOS/TTL level select |
| 2 | $DV_{DD}$ | - | Digital power supply +3.3 V | 16 | VREFL | I | Low level voltage reference input |
| 3 | MCLK | I | Master clock input | 17 | VREFH | I | High level voltage reference input |
| 4 | PDN | I | Power-down mode | 18 | $AV_{DD}$ | - | Analog power supply +5 V |
| 5 | BICK | I | Audio serial data clock | 19 | $AV_{SS}$ | - | Analog ground |
| 6 | SDATA | I | Audio serial data input | 20 | AOUTR- | O | Rch negative analog output |
| 7 | LRCK | I | L/R clock | 21 | AOUTR+ | O | Rch positive analog output |
| 8 | SMUTE/CSN | I | Soft mute/Chip select | 22 | AOUTL- | O | Lch negative analog output |
| 9 | DFS0/CAD0 | I | Sampling speed mode select/Chip address 0 | 23 | AOUTL+ | O | Lch positive analog output |
| 10 | DEM0/CCLK | I | De-emphasis enable 0/Control data clock | 24 | VCOM | O | Common voltage output |
| 11 | DEM1/CDTI | I | De-emphasis enable 1/Control data input | 25 | P/S | I | Parallel/serial select |
| 12 | DIF0 | I | Digital input format | 26 | TST1/DZFL | O | Test 1/Lch zero input detect |
| 13 | DIF1 | I | | 27 | TST2/CAD1 | I | Test 2/Chip address 1 |
| 14 | DIF2 | I | | 28 | ACKS/DZFR | I/O | Master clock auto setting mode/Rch zero input detect |

## • **YDA164C-QZE2** (YD652A00) **DIGITAL AMP** (Digital Audio Power Amplifier)

DM: IC500, 501

| PIN NO. | NAME | I/O | FUNCTION | PIN NO. | NAME | I/O | FUNCTION |
|---|---|---|---|---|---|---|---|
| 1 | AVSS | - | Analog GND | 17 | HOPP | I | PWM Carrier Frequency Hopping setting pin |
| 2 | VREF | O | Analog Reference Voltage Output | 18 | PLIMIT | I | Power Limit setting pin |
| 3 | REFA | O | Internal Regulator Output | 19 | SLEEPN | I | Sleep Reset pin |
| 4 | DVDD | - | Digital Power | 20 | PROTN | O | Error Flag Output pin |
| 5 | MCK | I | Master Clock Input Pin | 21 | MUTEN | I | Mute pin |
| 6 | SDATA | I | Audio Data Input Pin | 22 | CKMOD | I | Clock Mode setting pin |
| 7 | SCLK | I | Bit Clock Input Pin | 23 | GAIN0 | I | Gain setting pin 0 |
| 8 | LRCLK | I | Word Clock Input Pin | 24 | GAIN1 | I | Gain setting pin 1 |
| 9 | DVSS | - | Digital GND | 25 | MONO | I | Stereo/Mono setting pin |
| 10 | PVSSR | - | GND for the digital amplifier output (Rch) | 26 | PVSSL | - | GND for the digital amplifier output (Lch) |
| 11 | PVDDPR | - | Power for the digital amplifier output (Rch+) | 27 | PVDDML | - | Power for the digital amplifier output (Lch-) |
| 12 | OUTPR | O | Digital Amplifier Output (Rch+) | 28 | OUTML | O | Digital Amplifier Output (Lch-) |
| 13 | PVSSR | - | GND for the digital amplifier output (Rch) | 29 | PVSSL | - | GND for the digital amplifier output (Lch) |
| 14 | OUTMR | O | Digital Amplifier Output (Rch-) | 30 | OUTPL | O | Digital Amplifier Output (Lch+) |
| 15 | PVDDMR | - | Power for the digital amplifier output (Rch-) | 31 | PVDDPL | - | Power for the digital amplifier output (Lch+) |
| 16 | PVSSR | - | GND for the digital amplifier output (Rch) | 32 | PVSSL | - | GND for the digital amplifier output (Lch) |

# ■ CIRCUIT BOARDS

**AJK Circuit Board** (YF543D0) ..... 30
**DJK Circuit Board** (YF543D0) ..... 31
**DM Circuit Board** (YF515B0) ..... 26/27
**FU Circuit Board** (X9604B0) ..... 33
**JK Circuit Board** (YF543D0) ..... 32
**LCD Circuit Board** (YF544B0) ..... 25
**MK-H Circuit Board** (YC333D0) ..... 38
**MK-L Circuit Board** (YC333D0) ..... 36
**MK-M Circuit Board** (YC333D0) ..... 37
**PEDAL Circuit Board** (X9561D0) ..... 39
**PL Circuit Board** (XR898A0) ..... 34
**PNL Circuit Board** (YF555D0) ..... 34
**PS Circuit Board** (YF524E0) ..... 28/29
**PSW Circuit Board** (YF555D0) ..... 35
**VR Circuit Board** (YF555D0) ..... 35

**Note: See parts list for details of circuit board component parts.**

## ● LCD Circuit Board

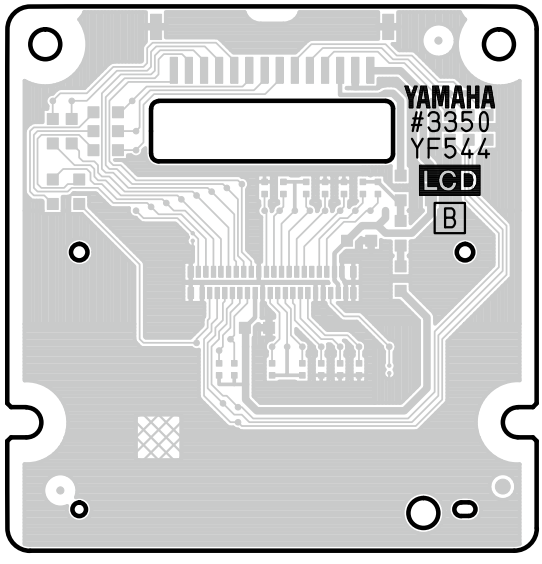


**Component side**

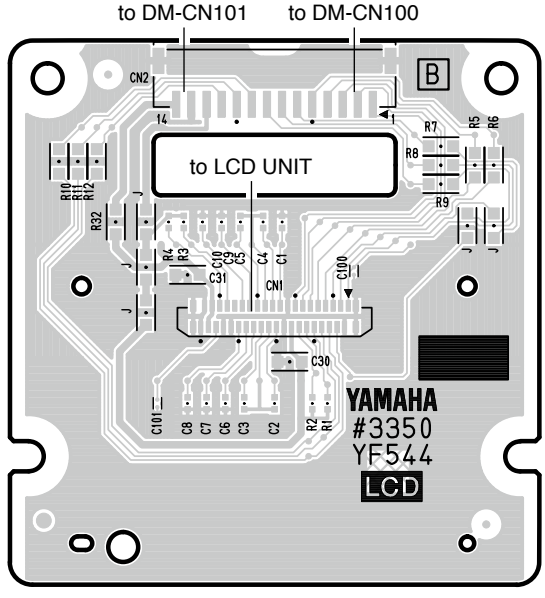


**Pattern side**

## ● DM Circuit Board

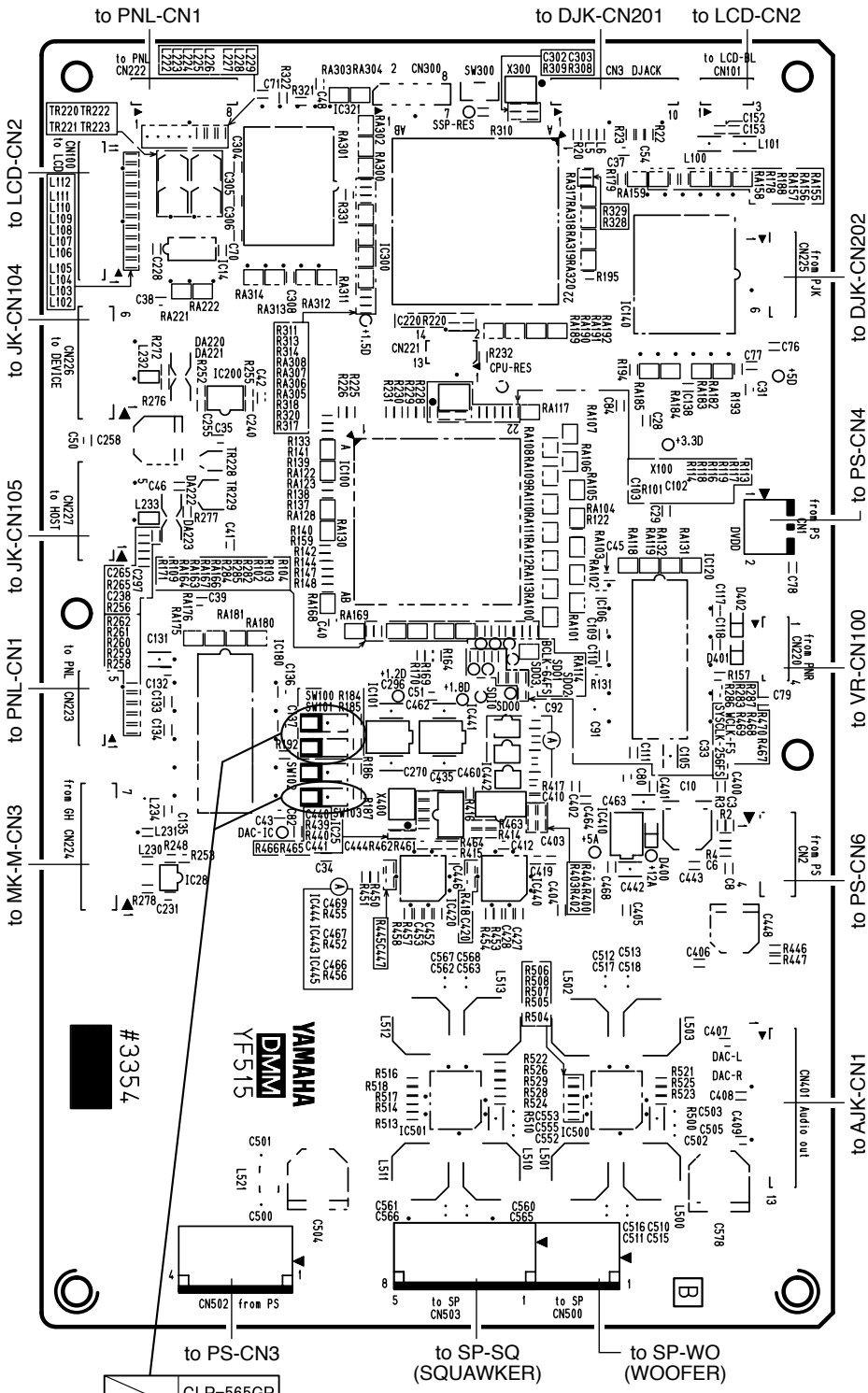


| | CLP-565GP |
|---|---|
| SW100 | SW = ON |
| SW101 | SW = OFF |
| SW103 | SW = OFF |

Model Setting

Destination Setting

**Component side**

## ● DM Circuit Board

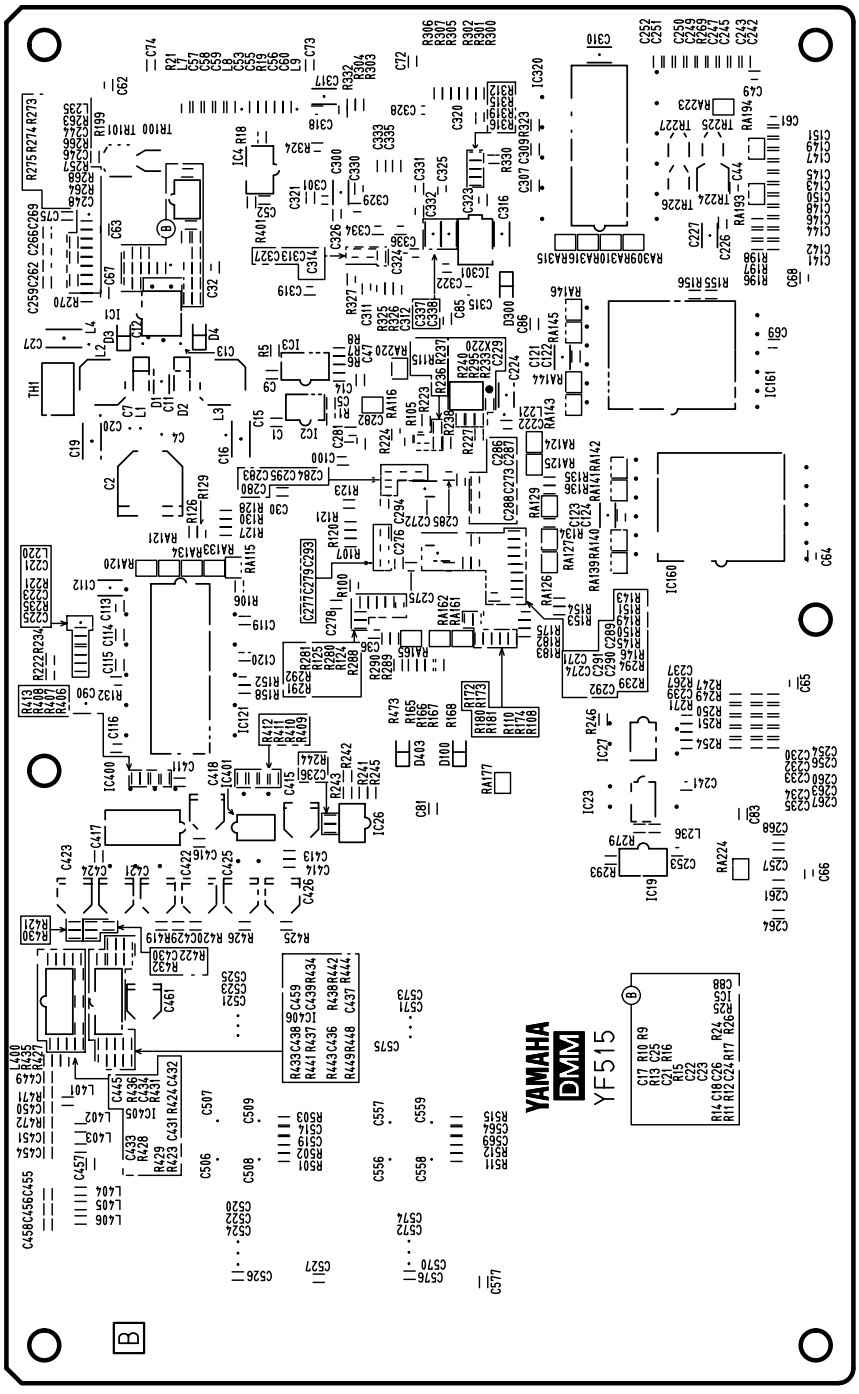


**Pattern side**

## ● PS Circuit Board

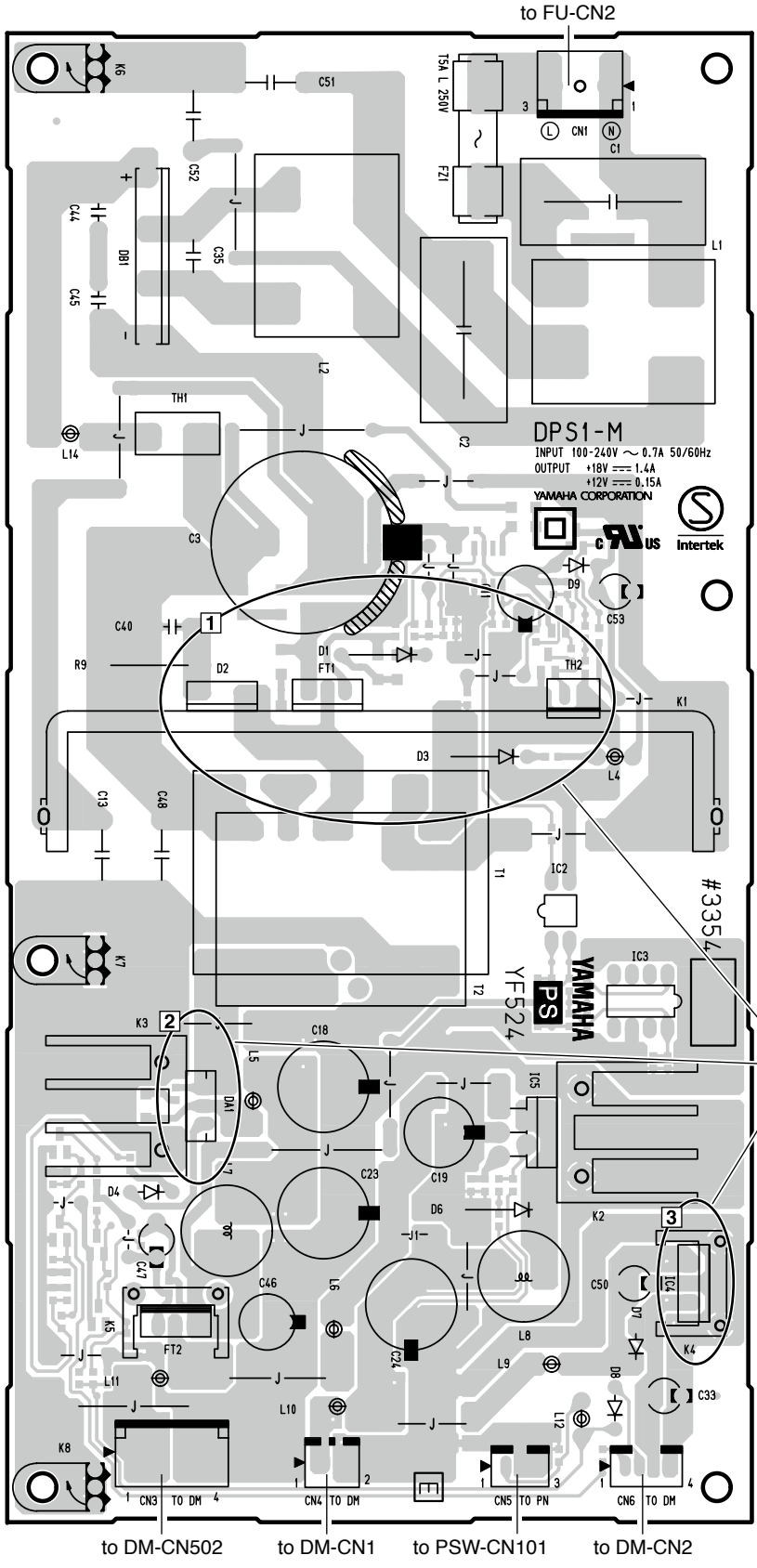


1 K1(Heat sink), FT1/D2/TH2 installation is shown as the figure1.
Silicon grease is applied to the FT1/D2 back.

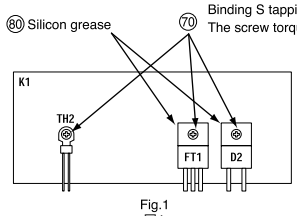


Fig.1
図1

2 K3(Heat sink), DA1 installation is shown as the figure2.

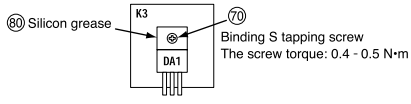


Fig.2

3 K4(Heat sink), IC4 installation is shown as the figure3.

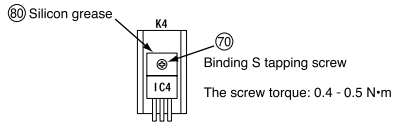


Fig.3

**Component side**

## ● PS Circuit Board

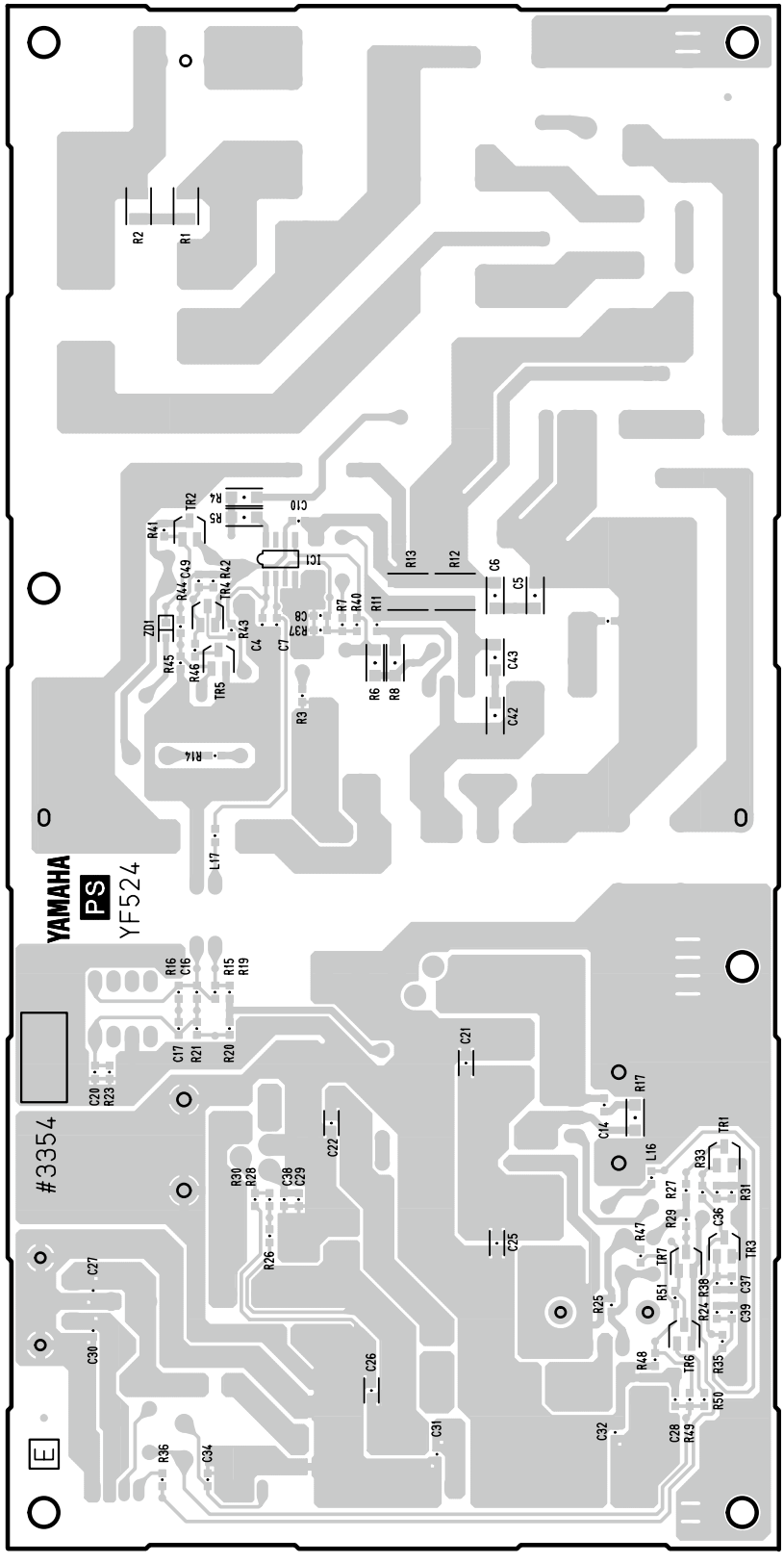


Pattern side

## ● AJK Circuit Board

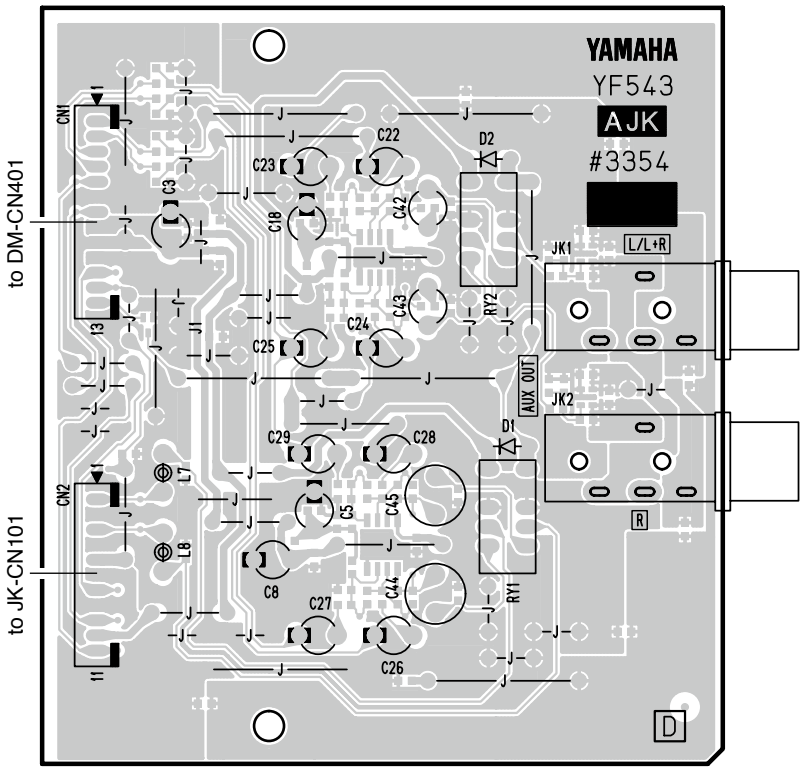


**Component side**

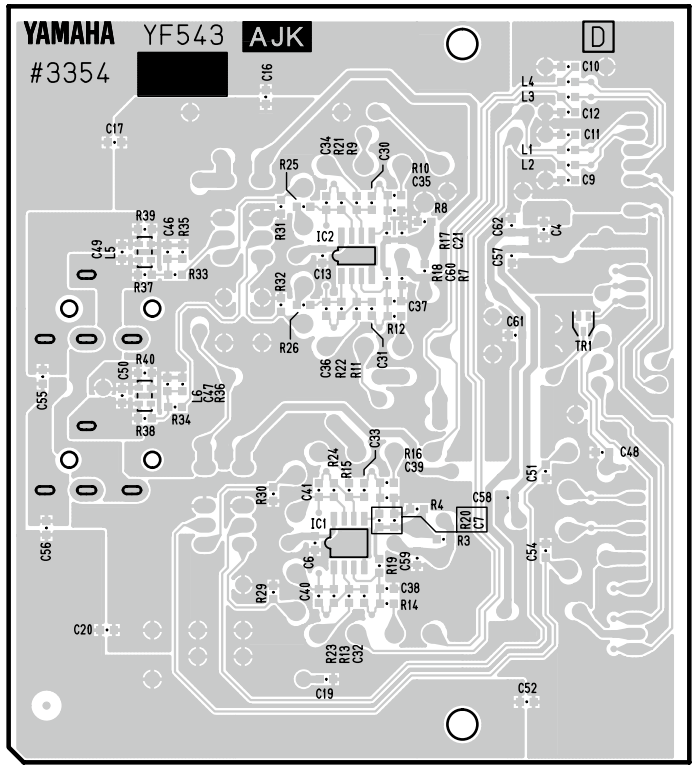


**Pattern side**

## ● DJK Circuit Board

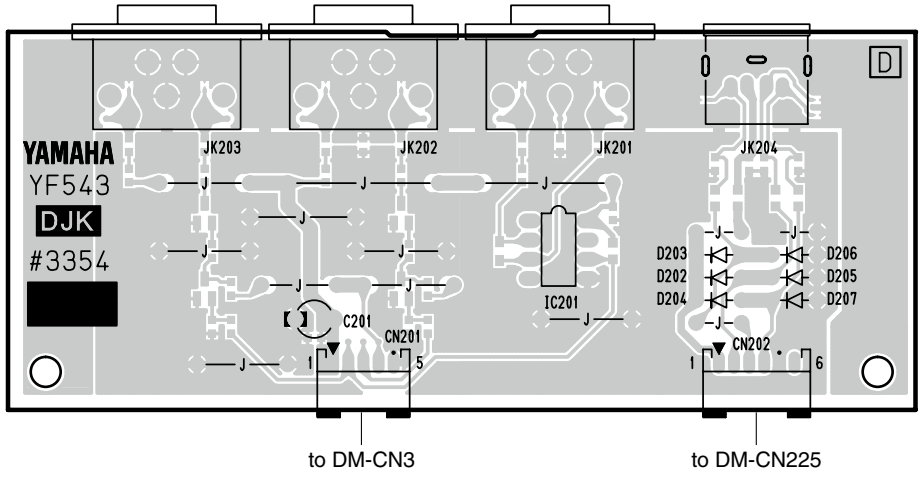


**Component side**

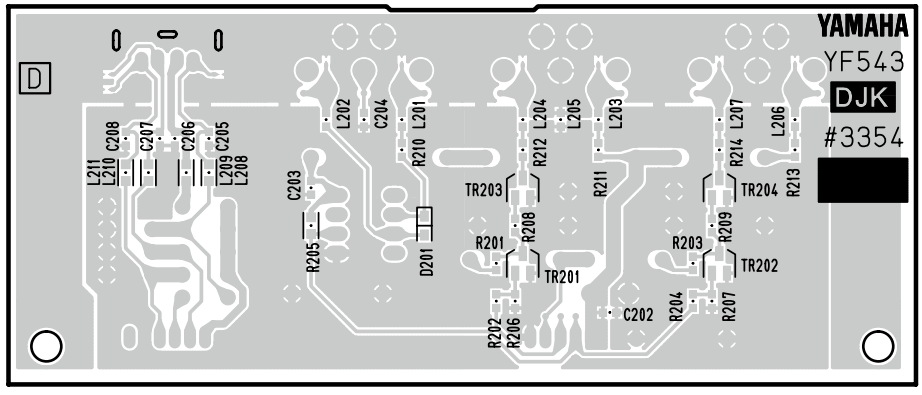


**Pattern side**

## ● JK Circuit Board

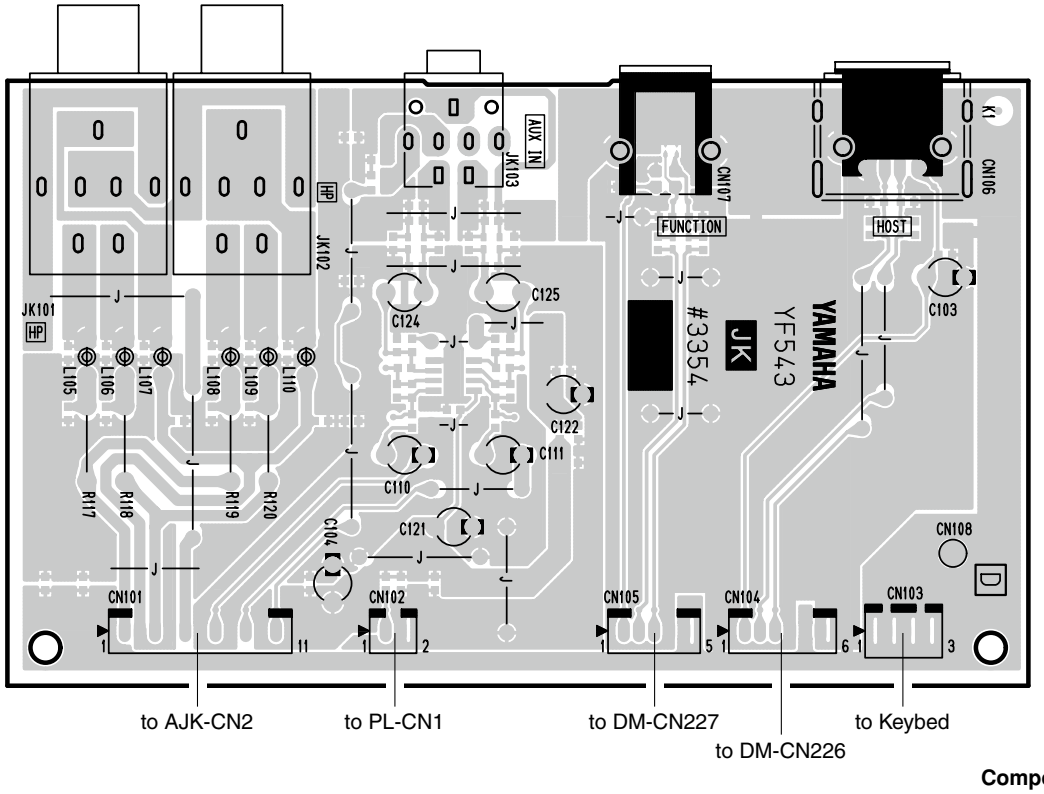


**Component side**

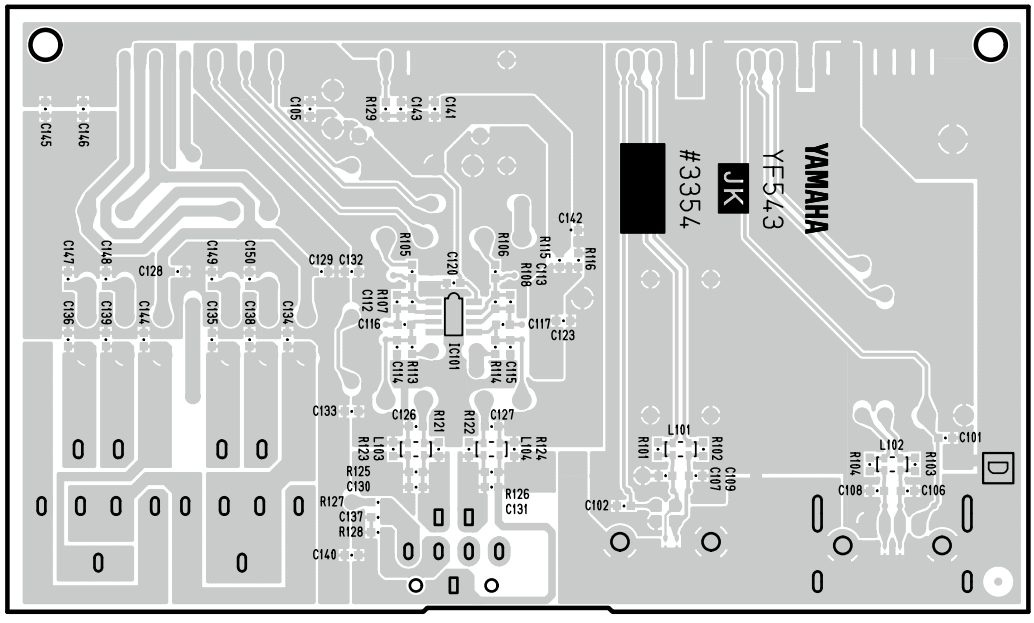


**Pattern side**

## ● FU Circuit Board

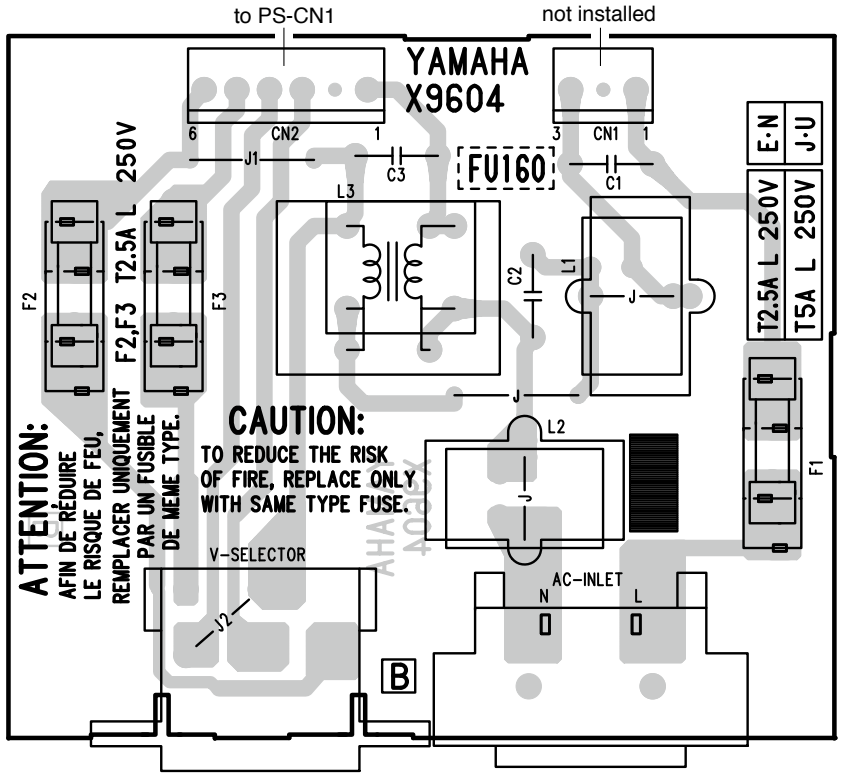


Component side

## ● PNL Circuit Board

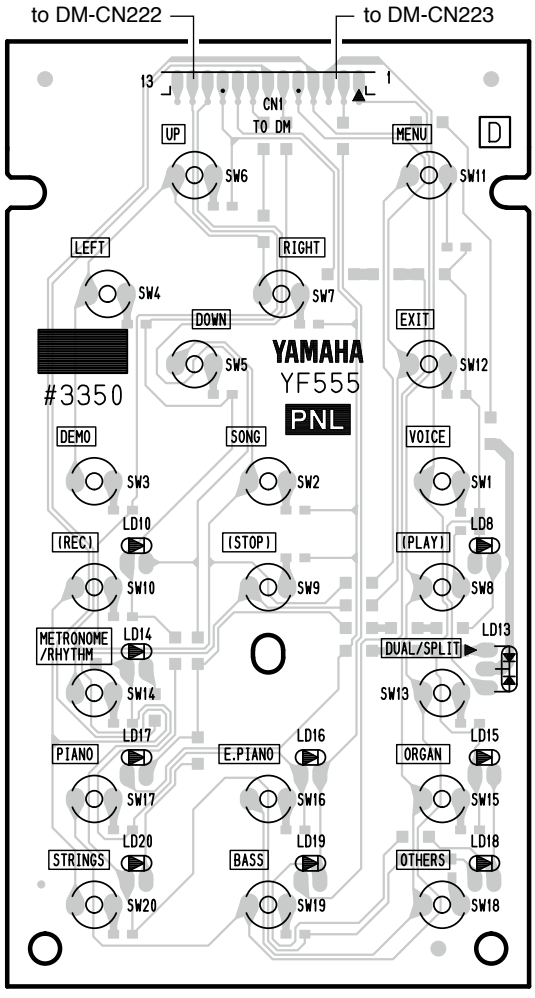


**Component side**

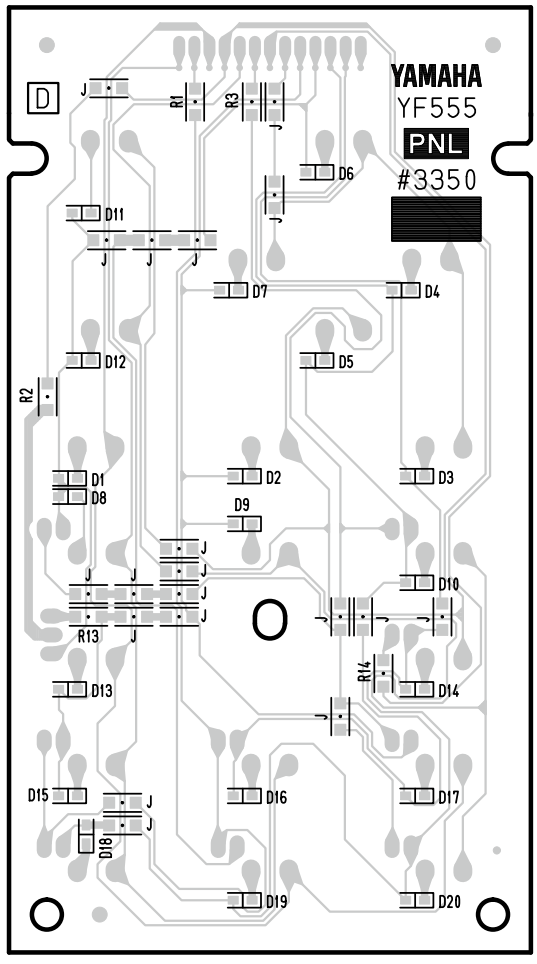


**Pattern side**

## ● PL Circuit Board

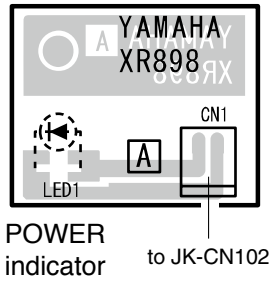


**Component side**

PNL: 2NA-ZG46220
PL: 2NA-ZJ12410

## ● PSW Circuit Board

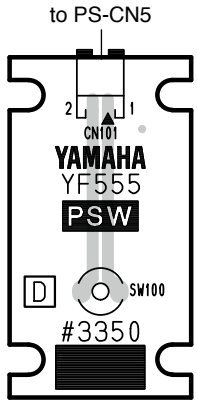


Component side

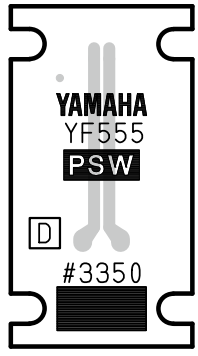


Pattern side

## ● VR Circuit Board

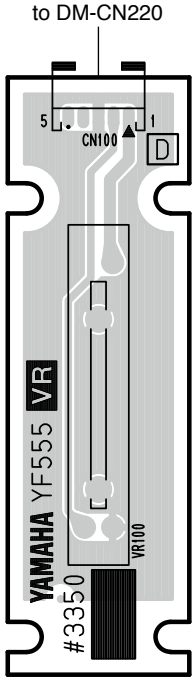


Component side

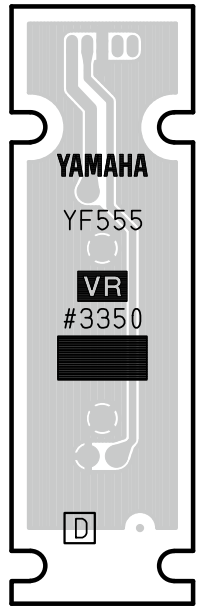


Pattern side

VR: 2NA-ZG46220
PSW: 2NA-ZG46220

## ● MK-L Circuit Board

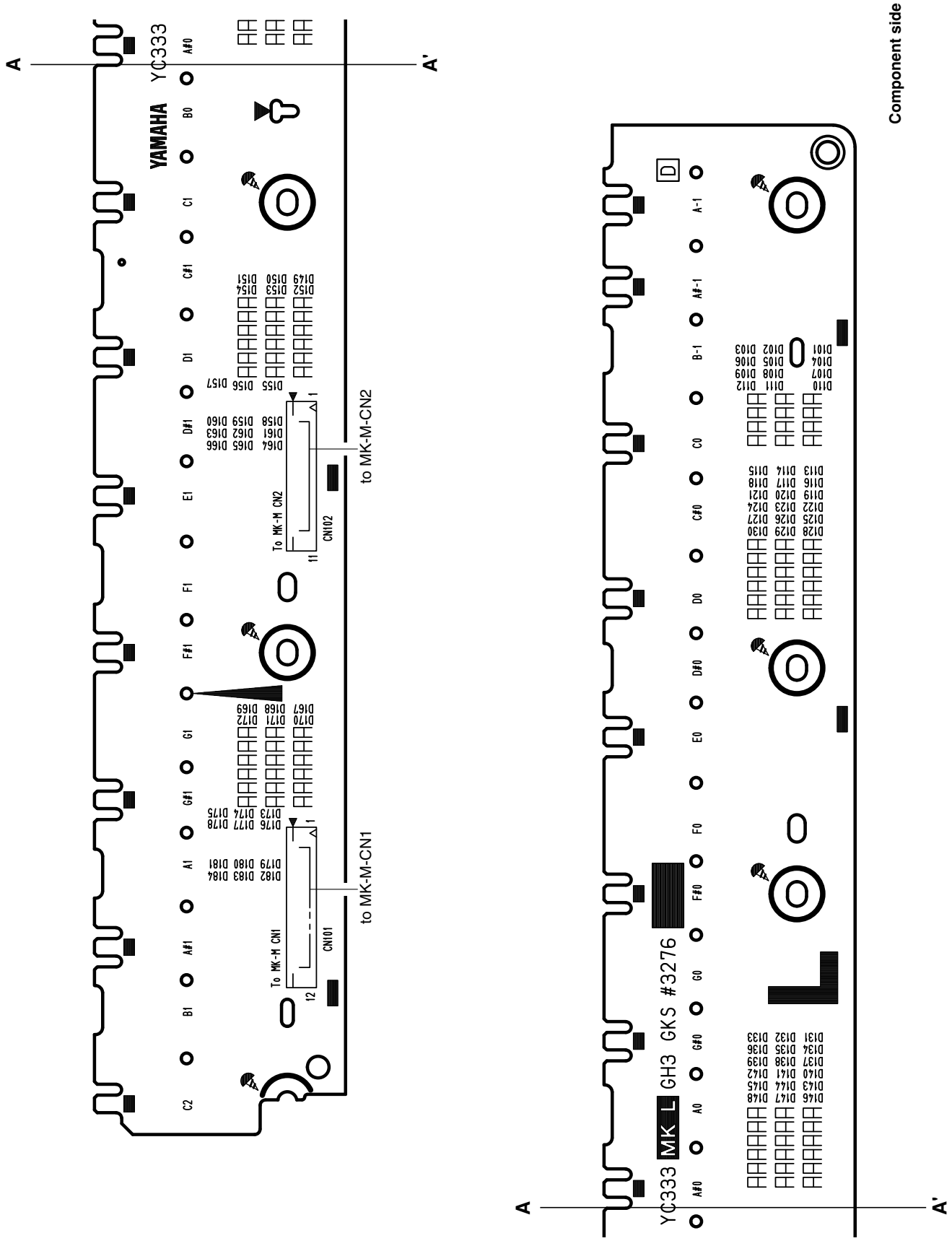

## ● MK-M Circuit Board

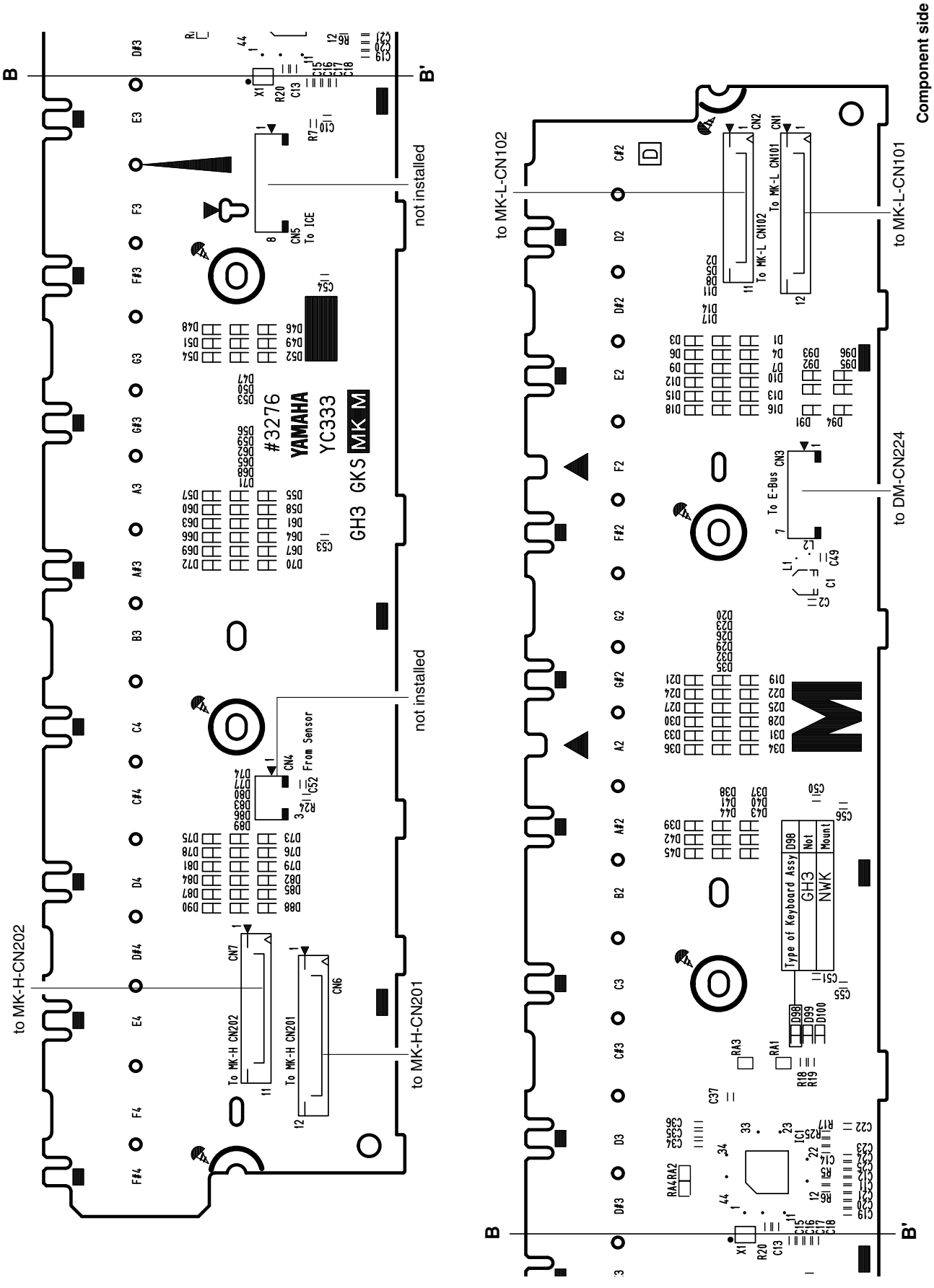

## ● MK-H Circuit Board

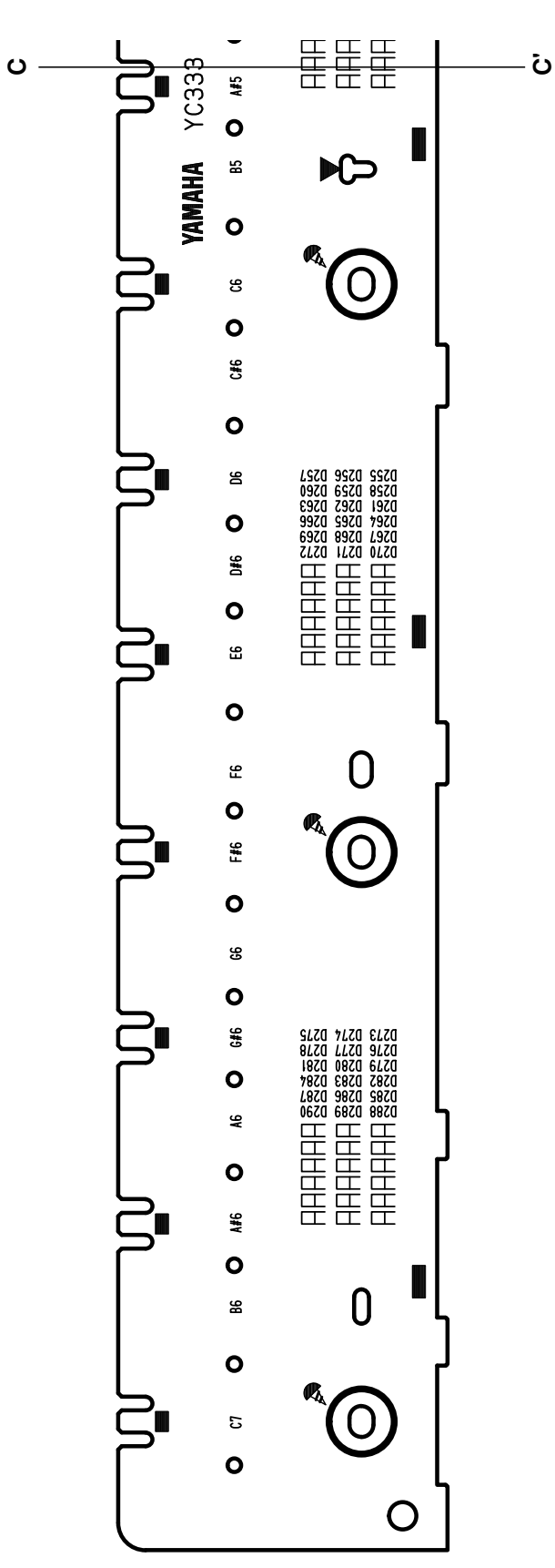

## ● PEDAL Circuit Board

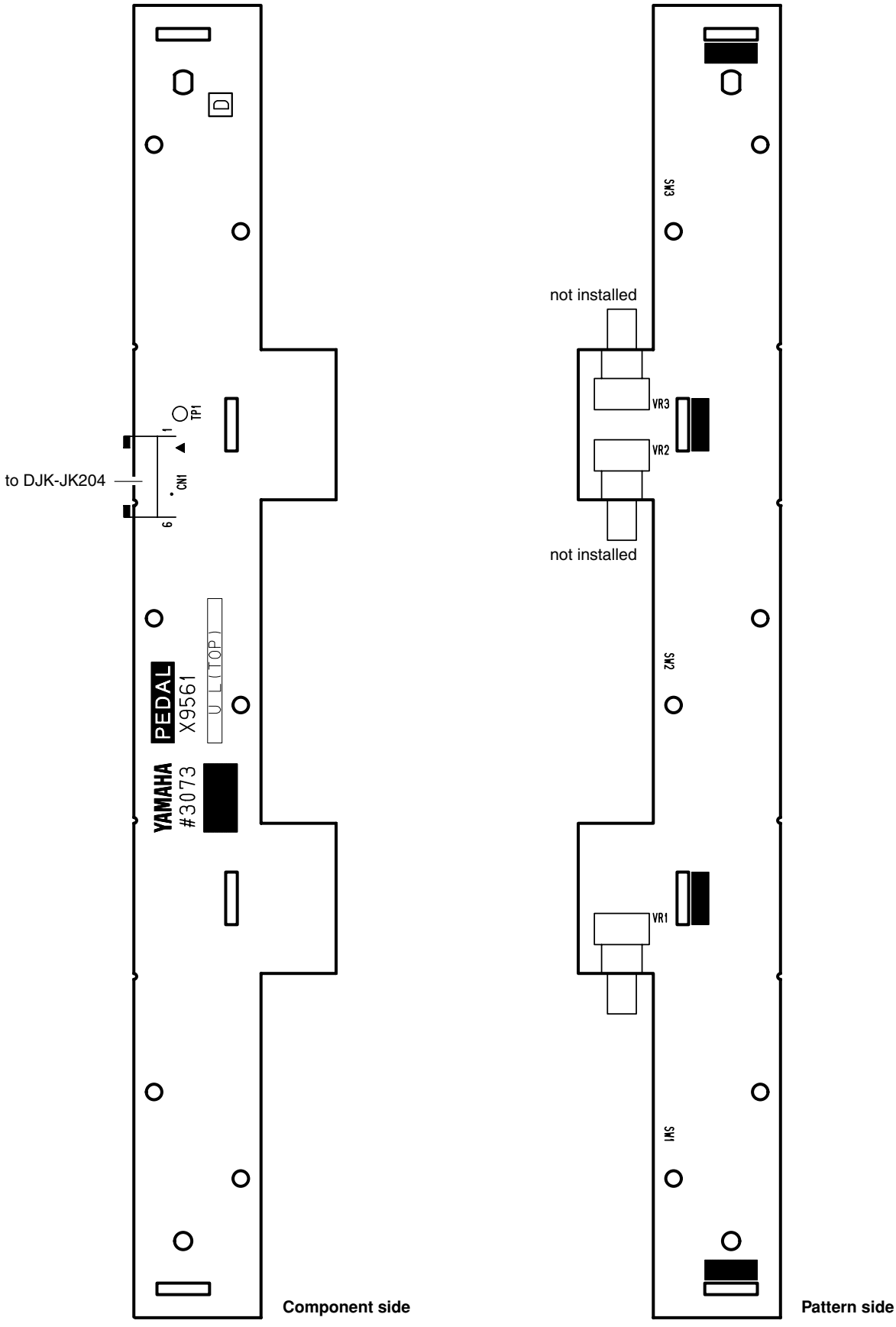


Component side

Pattern side

# ■ TEST PROGRAM

**** If you execute Test No. 44 Factory Set, the setting data and user data will be lost. Be sure to save these data for backup in advance. (See page 49.)***

## 1. Measurement condition

### 1-1. Environment

Perform tests under following conditions.

Ordinary temperature (5°C to 40°C)

Ordinary humidity (20% to 90%)

If the test results deviate from the test standard range, however, re-test under such conditions as the ordinary temperature (5°C to 40°C) and ordinary humidity (30% to 90% relative humidity).

### 1-2. Power voltage

The voltage should be ±10% of the power voltage of the destination.

### 1-3. Measuring instrument

Make sure that the instruments used for inspections have enough accuracy and precision.

Use the instruments with more than 1M-ohms input impedance.

- Level meter (using JIS-C filter)
- Frequency counter (should be capable of measuring to three places of decimals)
- Oscilloscope
- Oscillator
- Distortion meter

### 1-4. Test jig

Following jigs are required for testing.

- MIDI cable
- USB cable (A-B type)
- USB flash memory

### 1-5. Terminal condition

Unless otherwise specified, take measurement at the PHONES terminal. (Use a stereo plug.)

| | |
|---|---|
| PHONES : | Install a measuring plug (L/R ch: 33-ohms load) |
| | Install a measuring plug to one side only. |
| AUX IN : | Install a measuring plug |
| AUX OUT : | Install a measuring plug (L/R ch: 10k-ohms load) |

### 1-6. Control condition

Unless otherwise specified, set control knobs as follows.

MASTER VOLUME : Max

Set others in the default state when the power is turned on.

# 2. Test mode

## 2-1. Starting Test mode

There are two methods to start the Test mode.

### Method 1

1) While pressing keys [C#2], [F2], [G#2] (C#2 major chord) simultaneously, turn on the [⏻] Standby/On switch.

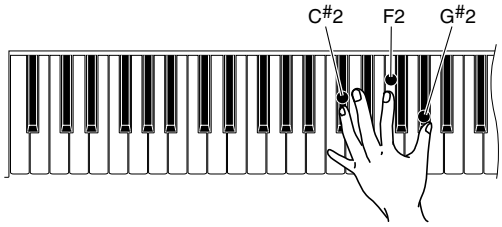


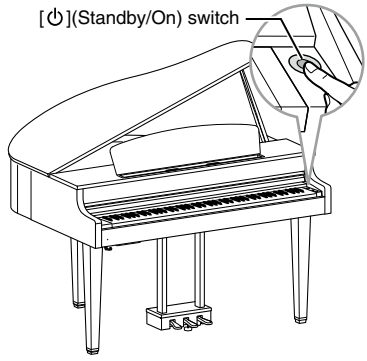


2) When the Test program is activated, "**TEST**" is shown on the LCD.

### Method 2

1) While pressing the buttons [PIANO], [BASS] and [ORGAN] simultaneously, turn on the [⏻] Standby/On switch.

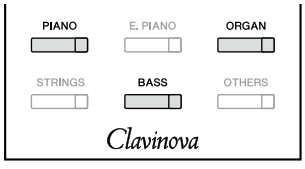


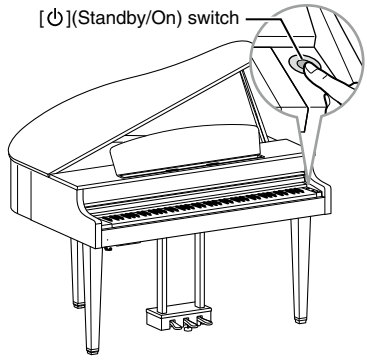


2) When the test program is activated, "**TEST**" is shown on the LCD.

## 2-2. Selection/execution of Test items

1) Select a test item using [<]/[>] buttons.

**** When the [<] (Reverse) button is pressed at the first item position, item selection advances to the last item and when the [>] (Forward) button is pressed at the last item position, item selection returns to the first item.***

2) Press the [►/▮▮] button to execute testing.

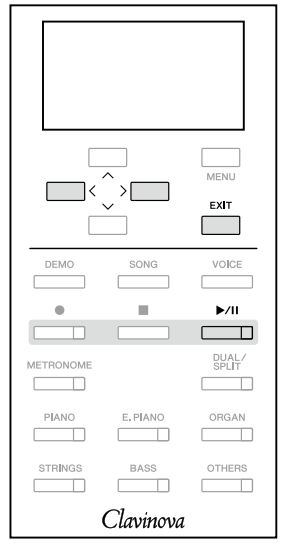


## 2-3. How to proceed testing when judged as NG

If the result is unacceptable, you can return to the test item selection screen with the [EXIT] button or the lowest note key.

## 2-4. Test "OK" item display

In the acceptable selection screen, an asterisk (∗) will be displayed at the head, so that you can see later if it has already been checked.
If the result is successful, you can return to the test item selection screen with the [►/▮▮] button, [EXIT] button, or the lowest note key.

## 3. Test program list

| LCD display | Test items and judging conditions |
|---|---|
| **001 : Version** | Indicates the model name, designated country information and each ROM version (***.****).<br>1) Press the [►/▮▮] button, and the versions are shown on the LCD.<br>2) The menu contains two pages and the pages can be switched with [<] and [>] buttons.<br>**[Page 1]** **[Page 2]**<br>**CLP-565GP (E)** **MainBoot : ＊.＊＊**<br>**MAIN ROM : ＊.＊＊** **MainProg : ＊.＊＊**<br>**Wave1 ROM: ＊.＊＊** **Cont1 : ＊.＊＊**<br>**Wave1 : ＊.＊＊**<br>**DSP Firm : ＊.＊＊**<br>**DSP Para : ＊.＊＊**<br>3) Press the [►/▮▮] button to exit the TEST item. |
| **002 : MemChk1 All** | Executes the simplified check of all the memories (test No. 003 to 006) at one time.<br>1) Press the [►/▮▮] button, and testing is executed and the test result is shown on the LCD.<br>OK: **OK**<br>NG: **NG (IC＊＊＊)**<br>2) Confirm that "**OK**" is shown on the LCD.<br>3) Press the [►/▮▮] button to exit the TEST item.<br>When the result is OK, tests No. 003 to 006 can be skipped.<br>When the result is NG: As testing will end when NG is detected first, execute test No. 003 to 006 and check details. |
| **003 : ROM1** | Executes the simplified check of the ROM connected to the CPU bus.<br>1) Press the [►/▮▮] button, and testing is executed and the test result is shown on the LCD.<br>OK: **OK**<br>NG: **NG (IC＊＊＊)**<br>2) Confirm that "**OK**" is shown on the LCD.<br>3) Press the [►/▮▮] button to exit the TEST item. |
| **004 : RAM1** | Executes the simplified check of the RAM connected to the CPU bus.<br>1) Press the [►/▮▮] button, and testing is executed and the test result is shown on the LCD.<br>OK: **OK**<br>NG: **NG (IC＊＊＊)**<br>2) Confirm that "**OK**" is shown on the LCD.<br>3) Press the [►/▮▮] button to exit the TEST item. |
| **005 : Wave ROM1** | Executes the simplified check of the Wave ROM.<br>1) Press the [►/▮▮] button, and testing is executed and the test result is shown on the LCD.<br>OK: **OK**<br>NG: **NG (IC＊＊＊)**<br>2) Confirm that "**OK**" is shown on the LCD.<br>3) Press the [►/▮▮] button to exit the TEST item. |
| **006 : Effect RAM1** | Executes the simplified check of the Effect RAM.<br>1) Press the [►/▮▮] button, and testing is executed and the test result is shown on the LCD.<br>OK: **OK**<br>NG: **NG (IC＊＊＊)**<br>2) Confirm that "**OK**" is shown on the LCD.<br>3) Press the [►/▮▮] button to exit the TEST item. |
| **008 : Pitch** | Checks whether or not the correct pitch is output from this instrument.<br>1) Connect the frequency counter to the [PHONES] jack at either L or R.<br>2) Set the [MASTER VOLUME] slider to the maximum position.<br>3) Press the [►/▮▮] button, the A3 sine wave sound is produced.<br>4) Measure the frequency and confirm that the measured value is 441.0Hz ± 0.2Hz.<br>5) Press the [►/▮▮] button to exit the TEST item, and sound production is stopped. |

| LCD display | Test items and judging conditions |
|---|---|
| **009 : Output R** | Measures the signal output level and distortion of the signal output from the R channel of each output terminal.<br>1) Connect the level meter to the output terminal to be measured.<br>2) Set the [MASTER VOLUME] slider to the maximum position.<br>3) Press the [►/▮▮] button, and the C5 sine wave sound is produced.<br>4) Measure the output level and distortion and confirm that the measured values are within the specified range.<br>[PHONES] (33Ω load)<br>PHONES L: -44.5 dBu or less PHONES R: +5.5 ± 2 dBu<br>[AUX OUT] (10kΩ load)<br>L/L+R; -50.2 dBu or less R: +9.8 ± 2 dBu<br>**** When the plug for measurement is disconnected from the AUX OUT R jack, the output is obtained at L ch.***<br>**** When the plug for measurement is disconnected from the PHONES jack, a sound is output from the speaker.***<br>5) Press the [►/▮▮] button to exit the TEST item, and sound production is stopped. |
| **010 : Output L** | Measures the signal output level and distortion of the signal output from the L channel of each output terminal.<br>1) Connect the level meter to the output terminal to be measured.<br>2) Set the [MASTER VOLUME] slider to the maximum position.<br>3) Press the [►/▮▮] button, and the C5 sine wave sound is produced.<br>4) Measure the output level and distortion and confirm that the measured values are within the specified range.<br>[PHONES] (33Ω load)<br>PHONES L: +5.5 ± 2 dBu PHONES R: -44.5 dBu or less<br>[AUX OUT] (10kΩ load)<br>L/L+R: +9.8 ± 2 dBu R: -50.2 dBu or less<br>**** When the plug for measurement is disconnected from the PHONES jack, a sound is output from the speaker.***<br>5) Press the [►/▮▮] button to exit the TEST item, and sound production is stopped. |
| **014 : SP MUTE** | Checks whether the Speaker Mute of analog signals work properly or not.<br>1) Press the [►/▮▮] button, and the C5 sound is produced from L and R channels at the same level and "**OFF**" is shown on the LCD.<br>2) Press the [>] button, and the SP MUTE circuit is activated and "**ON**" is shown on the LCD. Confirm that the speaker is muted.<br>3) Press the [<] button, and the SP MUTE circuit is deactivated and "**OFF**" is shown on the LCD. Confirm that muting of the speaker is cancelled.<br>4) Press the [►/▮▮] button to exit the TEST item, and sound production is stopped.<br>**Caution:**<br>While this test is executed, connection/disconnection of the headphone is not detected. (Sound comes out of the speaker even if the headphone is connected.) |
| **015 : FS MUTE** | Checks whether the Fail-Safe Circuit for digital volume control works properly or not.<br>1) Press the [►/▮▮] button, and the A3 sound is produced from L and R channels at the same level and "**OFF**" is shown on the LCD.<br>2) Press the [>] button, and the Fail-Safe Circuit function is activated and "**ON**" is shown on the LCD. Confirm that all output terminals are muted.<br>3) Press the [<] button, and the Fail-Safe Circuit function is deactivated and "**OFF**" is shown on the LCD. Confirm that muting of all output terminals is cancelled.<br>At this time, check that the MUTE relay for the headphones and AUX-OUT is not stuck.<br>4) If the Fail-Safe Circuit is not detected, "**NG**" is shown on the LCD.<br>5) Press the [►/▮▮] button to exit the TEST item, and sound production is stopped. |

| LCD display | Test items and judging conditions |
|---|---|
| **016 : MUTE** | Checks whether the MUTE of analog signals works properly or not.<br>1) Press the [►/▮▮] button, and the C5 sound is produced from L and R channels at the same level and "**OFF**" is shown on the LCD.<br>2) Press the [>] button, and the muting circuit is activated and "**ON**" is shown on the LCD.<br>Confirm that all output terminals are muted.<br>3) Press the [<] button, and the muting circuit is deactivated and "**OFF**" is shown on the LCD.<br>Confirm that muting of all output terminals is cancelled.<br>At this time, check that the MUTE relay for the headphones and AUX-OUT is not stuck.<br>4) Press the [►/▮▮] button to exit the TEST item, and sound production is stopped. |
| **017 : HP JACK** | Checks whether the PHONES jack work properly or not.<br>1) Press the [►/▮▮] button, and the C3 sound is produced from L and R channels at the same level and "**Not Inserted**" is shown on the LCD.<br>2) Connect the plug to the PHONES jack, and "**Inserted**" is shown on the LCD and C4 sine wave sound is produced through the headphone.<br>3) Disconnect the plug, and "**OK**" is shown on the LCD. Confirm that sound production is stopped.<br>4) Press the [►/▮▮] button to exit the TEST item. |
| **018 : AUX IN JACK** | Checks whether the AUX IN jack work properly or not.<br>1) Press the [►/▮▮] button, and "**Not Inserted**" is shown on the LCD.<br>2) Connect the plug to the AUX IN jack, and "**Inserted**" is shown on the LCD.<br>Check also that the sound input to the [AUX IN] jack is output to the [AUX OUT], [PHONES] jacks and SP.<br>3) Disconnect the plug, and "**Not Inserted**" is shown on the LCD.<br>4) Press the [►/▮▮] button to exit the TEST item.<br>**NOTE: Connect and disconnect the jack once, or no output will be available.** |
| **019 : SW, LED** | Checks whether each panel button with its LED (if available) works properly or not.<br>1) Press the [►/▮▮] button, and "**Push UP**" is shown on the LCD.<br>2) Press the button specified on the LCD.<br>"**button name On**" is shown on the LCD, the sine wave sound is produced with the pitch assigned to the pressed button, and the LED lamp lights if available.<br>For information about the pitch assigned to each button and the LED color, refer to pages 48.<br>3) Release the button, and the name of the push button to be pressed next is shown on the LCD.<br>4) Press the button specified on the LCD one by one.<br>After you finish checking all the buttons, "**End**" is shown on the LCD.<br>5) Press the [►/▮▮] button to exit from the current test.<br>**NOTE:**<br>Pressing the [EXIT] button twice will exit from this test anytime in this test.<br>If the pressed button is wrong, the following indication will be shown on the LCD.<br>• "**NG [the name for the pressed switch]**" when you press the button different from the one specified on the LCD.<br>• "**Over Two Sw**" when two or more buttons are pressed. |
| **020 : All LED** | Checks whether all the LED lamps light properly or not.<br>1) Press the [►/▮▮] button to start the test.<br>All the LED lamps are turned on, and "--" is shown on the LCD.<br>2) Confirm that all the LED lamps light.<br>3) Press the [►/▮▮] button to exit from this test.<br>All the LED lamps are turned off. |
| **021 : Red LED** | Checks whether all the red LED lamps light properly or not.<br>1) Press the [►/▮▮] button to start the test.<br>All the red LED lamps are turned on, and "--" is shown on the LCD.<br>2) Confirm that all the red LED lamps light.<br>3) Press the [►/▮▮] button to exit from this test.<br>All the LED lamps are turned off. |

| LCD display | Test items and judging conditions |
|---|---|
| **022 : Green LED** | Checks whether all the green LED lamps light properly or not.<br>1) Press the [►/▮▮] button to start the test.<br>All the green LED lamps are turned on, and "--" is shown on the LCD.<br>2) Confirm that all the green LED lamps light.<br>3) Press the [►/▮▮] button to exit from this test.<br>All the LED lamps are turned off. |
| **023 : LCD On** | Checks whether all the LCD dots are turned on (black) properly or not.<br>1) Press the [►/▮▮] button to start the test.<br>2) Check that all the dots of the LCD are turned on (black).<br>3) Press the [►/▮▮] button to exit from this test.<br>The LCD indication returns to the normal status. |
| **024 : LCD Off** | Checks whether all the LCD dots are turned off (white) properly or not.<br>1) Press the [►/▮▮] button to start the test.<br>2) Check that all the dots of the LCD are turned off (white).<br>3) Press the [►/▮▮] button to exit from this test.<br>The LCD indication returns to the normal status. |
| **025 : Back Light** | Checks whether the LCD backlight is turned ON/OFF properly or not.<br>1) Press the [►/▮▮] button to start the test.<br>The backlight is turned off.<br>2) Switch the backlight ON and OFF with the [<] button and [>] button.<br>3) Press the [►/▮▮] button to exit from this test.<br>The LCD indication returns to the normal status. |
| **026 : Main Volume** | Checks whether the MASTER VOLUME slider works properly or not.<br>1) Press the [►/▮▮] button, and "**VolMIN xx**" is shown on the LCD.<br>2) Set the [MASTER VOLUME] slider to the minimum position.<br>As the slider is moved, the value (0 to 255) is shown on the LCD.<br>When the minimum value is detected, "**VolMAX 0**" is shown on the LCD.<br>3) Set the [MASTER VOLUME] slider to the maximum position.<br>When the maximum value is detected, "**VolMID 255**" is shown on the LCD.<br>4) Set the [MASTER VOLUME] slider is moved lower than the center position.<br>"**OK xxx**" (xxx: value of slider stopped position) is shown on the LCD.<br>5) Press the [►/▮▮] button to exit the TEST item. |
| **027 : Pedal1** | Checks whether the Soft Pedal (Left) works properly or not.<br>1) Press the [►/▮▮] button to start the test.<br>2) When pressing the soft pedal, "**Start**" is shown on the LCD and produce the C3 sound for a second.<br>3) Releasing the pedal, confirm that "**OK**" is shown on the LCD and produce the C4 sound for a second.<br>4) Press the [►/▮▮] button to exit from this test. |
| **028 : Pedal2** | Checks whether the Sostenuto Pedal (Center) works properly or not.<br>1) Press the [►/▮▮] button to start the test.<br>2) When pressing the sostenuto pedal, "**Start**" is shown on the LCD and produce the C3 sound for a second.<br>3) Releasing the pedal, confirm that "**OK**" is shown on the LCD and produce the C4 sound for a second.<br>4) Press the [►/▮▮] button to exit from this test. |
| **029 : Pedal3** | Checks whether the Damper Pedal (Right) works properly or not.<br>1) Press the [►/▮▮] button to start the test.<br>2) When pressing the damper pedal, "**Start**" is shown on the LCD and produce the C3 sound for a second.<br>3) Releasing the pedal, confirm that "**OK**" is shown on the LCD and produce the C4 sound for a second.<br>4) Press the [►/▮▮] button to exit from this test. |
| **031 : MIDI** | Checks whether the MIDI terminals work properly or not.<br>1) Connect the single MIDI cable to MIDI IN and OUT terminals.<br>2) Press the [►/▮▮] button to start the test.<br>If no problem is found, the C4 sine wave sound is produced for a second and "**OK**" is shown on the LCD.<br>If any problem is found, "**NG**" is shown on the LCD.<br>3) Press the [►/▮▮] button to exit from this test.<br>4) Disconnect the MIDI cable from the terminals. |

| LCD display | Test items and judging conditions |
|---|---|
| **032 : USB Connect** | Checks whether the USB [TO DEVICE] and USB [TO HOST] terminals work properly or not.<br>1) Press the [►/▮▮] button first. "**Device-Host**" is shown on the LCD.<br>2) Using the USB cable, loop connect the USB [TO DEVICE] terminal and USB [TO HOST] terminal. Confirm that "**OK**" is shown on the LCD and the C4 sound is produced for a second.<br>3) Press the [►/▮▮] button to exit from this test.<br>4) Disconnect the USB cable. |
| **033 : USB Storage** | Checks whether or not the instrument can access the USB memory device connected to the USB [TO DEVICE] terminal.<br>1) Insert the USB flash memory and press the [►/▮▮] button.<br>2) Confirm that "**OK**" is shown on the LCD.<br>3) Press the [►/▮▮] button to exit from this test.<br>4) Disconnect the USB flash memory. |
| **034 : Key Type** | Checks whether this instrument can recognize the keyboard type correctly or not.<br>1) Press the [►/▮▮] button to start the test.<br>2) Confirm that "**OK (GH3)**" is shown on the LCD.<br>3) Press the [►/▮▮] button to exit from this test. |
| **036 : Make Pos** | Checks whether the GH3 Make Position for the keyboard. (PingPongPang mode)<br>1) Press the [►/▮▮] button to start the test.<br>2) Press the key on the keyboard.<br>3) "**Note: xxM 1**" -> "**Note: xxM12**" -> "**Note: xxM 123**" are shown on the LCD while testing. 0, +4 and +7 notes are output with a velocity of 127 for every three Makes. For example, if pressing the C key on the keyboard, each note CEG is output.<br>4) Releasing the key, sound output sequentially stops. Confirm that "**OK**" is shown on the LCD.<br>5) Press the [►/▮▮] button to exit from this test. |
| **037 : 1-2Make** | Checks whether the 1-2 Make velocity for the keyboard.<br>1) Press the [►/▮▮] button to start the test.<br>2) Press the key on the keyboard.<br>3) "**Note: xx**" (Note No.) and "**Vel: nn**" (Make velocity) are shown on the LCD while testing. Sound is output with a velocity calculated by the 1-2Make. The value nn varies depending on the velocity with which the key is pressed. (nn: 127 max.)<br>4) Releasing the key, confirm that "**OK**" is shown on the LCD.<br>5) Press the [►/▮▮] button to exit from this test. |
| **038 : 2-3Make** | Checks whether the 2-3 Make velocity for the keyboard.<br>1) Press the [►/▮▮] button to start the test.<br>2) Press the key on the keyboard.<br>3) "**Note: xx**" (Note No.) and "**Vel: nn**" (Make velocity) are shown on the LCD while testing. Sound is output with a velocity calculated by the 2-3Make. The value nn varies depending on the velocity with which the key is pressed. (nn: 127 max.)<br>4) Releasing the key, confirm that "**OK**" is shown on the LCD.<br>5) Press the [►/▮▮] button to exit from this test. |
| **039 : ROM2** | Executes the complete check of the ROM.<br>1) Press the [►/▮▮] button, and testing is executed and the test result is shown on the LCD.<br>OK: **OK**<br>NG: **NG (IC＊＊＊)**<br>2) Confirm that "**OK**" is shown on the LCD.<br>3) Press the [►/▮▮] button to exit the TEST item. |
| **040 : RAM2** | Executes the complete check of the RAM.<br>1) Press the [►/▮▮] button, and testing is executed and the test result is shown on the LCD.<br>OK: **OK**<br>NG: **NG (IC＊＊＊)**<br>2) Confirm that "**OK**" is shown on the LCD.<br>3) Press the [►/▮▮] button to exit the TEST item. |

| LCD display | Test items and judging conditions |
|---|---|
| **041 : Wave ROM2** | Executes the complete check of the Wave ROM. (It will take about 3 minutes 50 seconds.)<br>1) Press the [►/▮▮] button, and testing is executed and the test result is shown on the LCD.<br>OK: **OK**<br>NG: **NG (IC＊＊＊)**<br>2) Confirm that "**OK**" is shown on the LCD.<br>3) Press the [►/▮▮] button to exit the TEST item. |
| **042 : Effect RAM2** | Executes the complete check of the Effect RAM . (It will take about 30 seconds.)<br>1) Press the [►/▮▮] button, and testing is executed and the test result is shown on the LCD.<br>OK: **OK**<br>NG: **NG (IC＊＊＊)**<br>2) Confirm that "**OK**" is shown on the LCD.<br>3) Press the [►/▮▮] button to exit the TEST item. |
| **044 : Factory Set** | Resets the Flash ROM to the initial factory status.<br>1) Press the [►/▮▮] button to restore initial data and "**OK**" is shown on the LCD.<br>2) Press the [►/▮▮] button to exit from this test.<br>**NOTE: This operation causes only the initializing flag to erect. Actual setting is executed when the power is turned on next time or when 045 : Test Exit is executed.** |
| **045 : Test Exit** | Lets you exit from the Test mode to the normal mode.<br>1) Press the [►/▮▮] button.<br>The Test Program mode will end, then the CLP-565GP will be restarted.<br>**NOTE: Never turn off the power until the Main display appears. Doing so may cause a malfunction.** |

## ● Inspections of the others

### AUX IN

Check that each terminal output is as shown in the table below when a signal is inputted into AUX IN.

| INPUT / OUTPUT | AUX OUT (10 kΩ load) | | PHONES (33 Ω load) | |
|---|---|---|---|---|
| | L | R | L | R |
| AUX IN L: Sine wave (1 kHz, -5 dBu)<br>AUX IN R: No input | +8.5 ± 2 dBu | -51.5 dBu or less | +4.0 ± 2 dBu | -41.0 dBu or less |
| AUX IN L: No input<br>AUX IN R: Sine wave (1 kHz, -5 dBu) | -51.5 dBu or less | +8.5 ± 2 dBu | -41.0 dBu or less | +4.0 ± 2 dBu |

* 0 dBu = 0.775 Vrms

### Noise Level Check

Connect the level meter (with JIS-C filter) to L/R of the [PHONES] jack. (33 ohms load)
Do not connect anything to the [AUX IN] jack.
Set [MASTER VOLUME] to the maximum level and check the noise level.
· PHONES L, R: –90 dBu or less

## ● Switch Test Sequence

| Turn | SW Name | Display | LED made to turn on | Note number |
|---|---|---|---|---|
| 1 | ∧ | UP | - | C3 |
| 2 | MENU | MENU | - | C#3 |
| 3 | < | LEFT | - | D3 |
| 4 | > | RIGHT | - | D#3 |
| 5 | ∨ | DOWN | - | E3 |
| 6 | EXIT | EXIT | - | F3 |
| 7 | DEMO | DEMO | - | F#3 |
| 8 | SONG | SONG | - | G3 |
| 9 | VOICE | VOICE | - | G#3 |
| 10 | ● (Recording) | REC | ● (Red) | A3 |
| 11 | ■ (STOP) | STOP | - | A#3 |
| 12 | ►/▮▮ (Play/Pause) | PLAY | ►/▮▮ (Red) | B3 |
| 13 | METRONOME | METRONOME | METRONOME (Red) | C4 |
| 14 | DUAL/SPLIT | DUAL/SPLIT | DUAL/SPLIT (Orange) | C#4 |
| 15 | PIANO | VOICE1 | VOICE1 (Red) | D4 |
| 16 | E.PIANO | VOICE2 | VOICE2 (Red) | D#4 |
| 17 | ORGAN | VOICE3 | VOICE3 (Red) | E4 |
| 18 | STRINGS | VOICE4 | VOICE4 (Red) | F4 |
| 19 | BASS | VOICE5 | VOICE5 (Red) | F#4 |
| 20 | OTHERS | VOICE6 | VOICE6 (Red) | G4 |

# ■ INITIAL SETTING

• MASTER VOLUME: MIN

## ■ BACKUP

This lets you save data on internal memory to the connected USB flash memory as a backup file (named "CLP-565GP.bup"). This backup file can be loaded to the instrument via the Restore operation for future.

**NOTICE**

- It may take 1 – 2 minutes to complete this operation. Never turn off the power during this operation (while "Executing" is shown). Doing so could result in damage to the data.
- If the same backup file (CLP-565GP.bup) is already saved in the USB flash memory, this operation will overwrite or replace this file with new one.

1) Connect the USB flash memory to the USB [TO DEVICE] terminal.
2) Press the [MENU] button several times to select "System Menu."
3) Use the [∧]/[∨] buttons to select "Backup," use the [>] button to call up the next display, then use the [∧]/[∨] buttons to select "Backup."
4) Use the [>] button to call up the next display, then use the [∧]/[∨] buttons select "Execute."
5) Press the [>] button to execute the Backup operation.
6) Press the [EXIT] button to exit from the System Menu display.

**NOTE**

When you want to restore the settings in the backup file, execute the Restore function.

**NOTE**

Protected Songs cannot be backed up.

## ■ RESTORE

This lets you load the backup file (CLP-565GP.bup) saved via the Backup operation to the instrument on.

**NOTICE**

- It may take 1 – 2 minutes to complete this operation. Never turn off the power during this operation (while "Executing" is shown). Doing so could result in damage to the data.
- If Protected Songs or recorded Songs reside on "User" memory, make sure to move the Songs to the USB flash memory by following the instructions before executing this operation. If you do not, the Songs will be deleted via this operation.

1) Connect the USB flash memory containing the Backup file to the USB [TO DEVICE] terminal.
2) Press the [MENU] button several times to select "System Menu."
3) Use the [∧]/[∨] buttons to select "Backup," use the [>] button to call up the next display, then use the [∧]/[∨] buttons to select "Restore."
4) Use the [>] button to call up the next display, then use the [∧]/[∨] buttons select "Execute."
5) Press the [>] button to execute the Restore operation.

A message indicating that the operation is completed appears, then the instrument will restart automatically after a while.

# ■ FACTORY SET

This lets you reset this instrument to its factory default settings which refers to the initial setting preprogrammed when shipped from the factory.

**Note that the following points.**

- This operation resets the Backup Setting to the default setting.
- This operation will not delete the Songs saved in the User folder.

**NOTICE**

Never turn off the power during this operation (while "Factory set executing" is shown). Doing so could result in damage to the data.

1) Press the [MENU] button several times to select "System Menu."
2) Use the [∧]/[∨] buttons to select "Backup," use the [>] button to call up the next display, then use the [∧]/[∨] buttons to select "Factory Set."
3) Use the [>] button to call up the next display, then use the [∧]/[∨] buttons select "Execute."
4) Press the [>] button to execute the Restore operation.

A message indicating that the operation is completed appears, then the instrument will restart automatically after a while.

## ● Alternate method for restoring the default settings

Press and hold down the white key on the right end (C7) and press the [⏻] (Standby/On) switch to turn on the power to this instrument. This operation will not delete the Songs in the User folder.

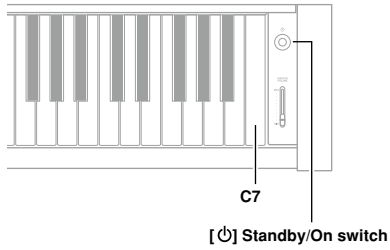


## ● Method to initialize the backup data including user songs in the built-in memory

1) Turn on the power (by pressing the [⏻] (Standby/On) switch) while pressing [F♯5], [G5] and [A♯5] keys, and user songs will be deleted and the initial setting will be restored.

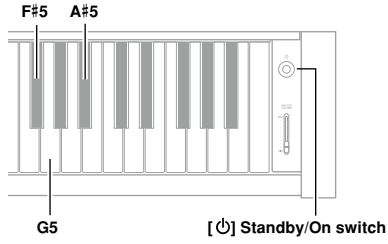


2) Execute 045: Factory Set in the Test mode.

# ■ VERSION UPDATING

* **Download the version updating program from the YAMAHA website.**
  • **File name: CLP-565GPSETUP.PRG**
* **As updating the version will cause the user data to be erased, be sure to back-up the user data in advance.**

**Do not turn off the power during installation.**
**Do not remove the USB flash memory during installation.**

## 1. Preparation

Insert the USB flash memory containing the installation data to the USB [TO DEVICE] terminal.

**** Be sure to place the installation program in the root directory of the USB flash memory.***

## 2. Starting Installer

While pressing the [►/❚❚] button, turn on the [⏻] Standby/On switch.
The installation mode screen appears.




## 3. Executing installation

Press the [►/❚❚] button, and the version to be installed appears.




Press the [►/❚❚] button again to execute installation.

**While installation is going on:**
The window appears as shown below when installation starts.

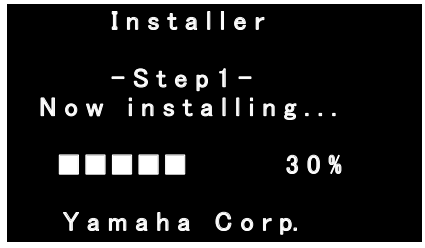


**When installation is completed:**
The window appears as shown below and installation ends.




## 4. Confirming version

Remove the USB flash memory and check the test mode version shown on the screen. The version should be as specified.

## 5. Executing factory setting

After the version upgrading procedure, execute Factory setting (See page 50).
This completes the version updating.

## 6. Trouble Shooting.

Q1. Turn off the power, or take off USB memory during install job, etc.

A1. Retry the install job by first step.

Q2. Cannot install job, because appear the error message.

A2. Check follow the item.

- Check the USB memory insert correctly.
- Check the USB memory clean.
- Check the install data in the root directory on USB memory.
- Check the data or USB memory is normal.
- Check correctly data for install PSR model.
- Please use another USB memory, try again, Please.

# ■ DM CIRCUIT BOARD CHECK METHOD

The DM Circuit Board is provided with test points for service check purposes.
Check the test points on the DM Circuit Board if the following symptoms appear.

### Symptoms and check items

1) No LCD display with Power SW ON --> Check items 1 to 6 sequentially
2) No sound or distorted sound --> Check items 1, 7 to 11 sequentially and OUTPUT check items.

### Test Point

| NO. | Test Point | Circuit | Judgment criteria | Measured by | Parts with possible defects |
|---|---|---|---|---|---|
| ① | DVDD | Power supply for DM circuit board | 16.5V – 18.0V | Multimeter | FZ1<br>(On PS Circuit Board) |
| ② | +5D | 5 V power for digital circuit | 5.0V±0.5V | Multimeter | IC1 or TH1 |
| ③ | +3.3D | 3.3 V power for digital circuit | 3.3V±0.3V | Multimeter | IC1 |
| ④ | +1.2D | 1.2V power for CPU IC | 1.2V±0.1V | Multimeter | IC101 |
| ⑤ | +1.8D | 1.2V power for DSP IC | 1.8V±0.1V | Multimeter | IC441 |
| ⑥ | CPU-RES | CPU IC reset signal | 3.3V±0.3V | Multimeter | IC2 or IC3 |
| ⑦ | +12A | 12 V power for analog circuit | 12.0V±1.0V | Multimeter | IC4 (On PS Circuit Board) |
| ⑧ | +5A | 5 V power for analog circuit | 5.0V±0.5V | Multimeter | IC410 |
| ⑨ | DAC-IC | DAC/ADC IC reset signal | 3.3V±0.3V | Multimeter | IC100 or IC19 |
| ⑩ | DAC-L | AUX-OUT<br>DAC output L channel | There shall be audio signal without distortion. | Signal Checker | IC400 or IC405 |
| ⑪ | DAC-R | AUX-OUT<br>DAC output R channel | There shall be audio signal without distortion. | Signal Checker | IC400 or IC405 |

Note1: With this product, Test Point “+1.5D” and “SSP-RES” is not used.

### Output

| NO. | SPEAKER OUTPUT | PHONES OUTPUT | AUX-OUT OUTPUT | DAC-L/R TEST POINT | Parts with possible defects |
|---|---|---|---|---|---|
| 1 | × | × | × | × | IC100 (DAC-MUTE or /DAC-IC) |
| 2 | × | × | × | ○ | IC100 or Error Detect Circuit |
| 3 | ○ | × | × | × | IC400 or IC405 |
| 4 | × | ○ | ○ | ○ | IC500 or IC501 |
| 5 | ○ | × | ○ | ○ | IC1 or RY1 (AJK Circuit Board) |
| 6 | ○ | ○ | × | ○ | IC2 or RY2 (AJK Circuit Board) |

Note: “○” mark expresses normalcy and “×” mark expresses a failed state.

In order to secure our repair quality, Yamaha doesn’t supply a part of surface mount devices. If you need to replace them, replace whole the DM circuit board.

**DM Circuit Board (ZJ421700)**

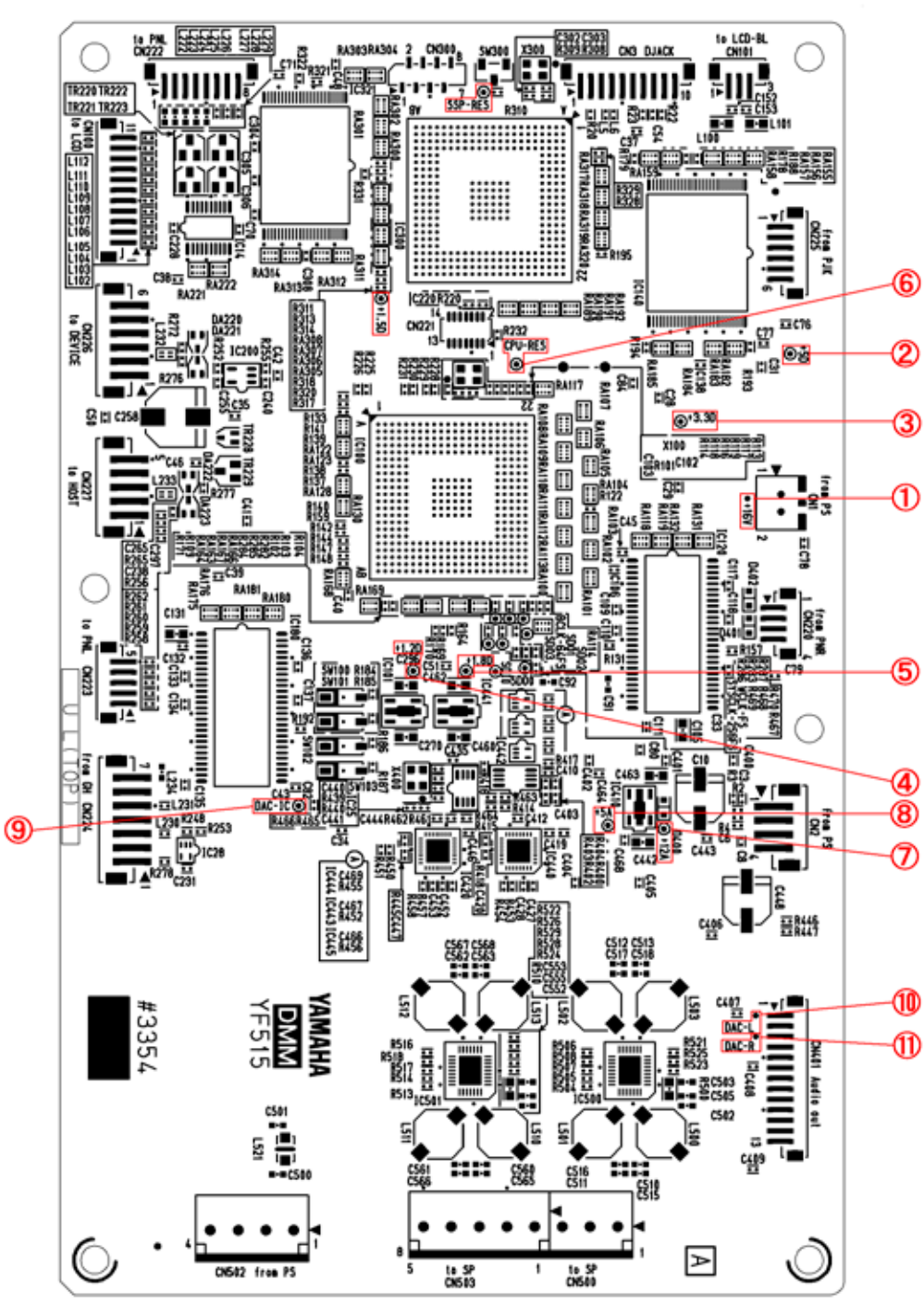


Component side

# ■ SYSTEM BOOTING FLOWCHART

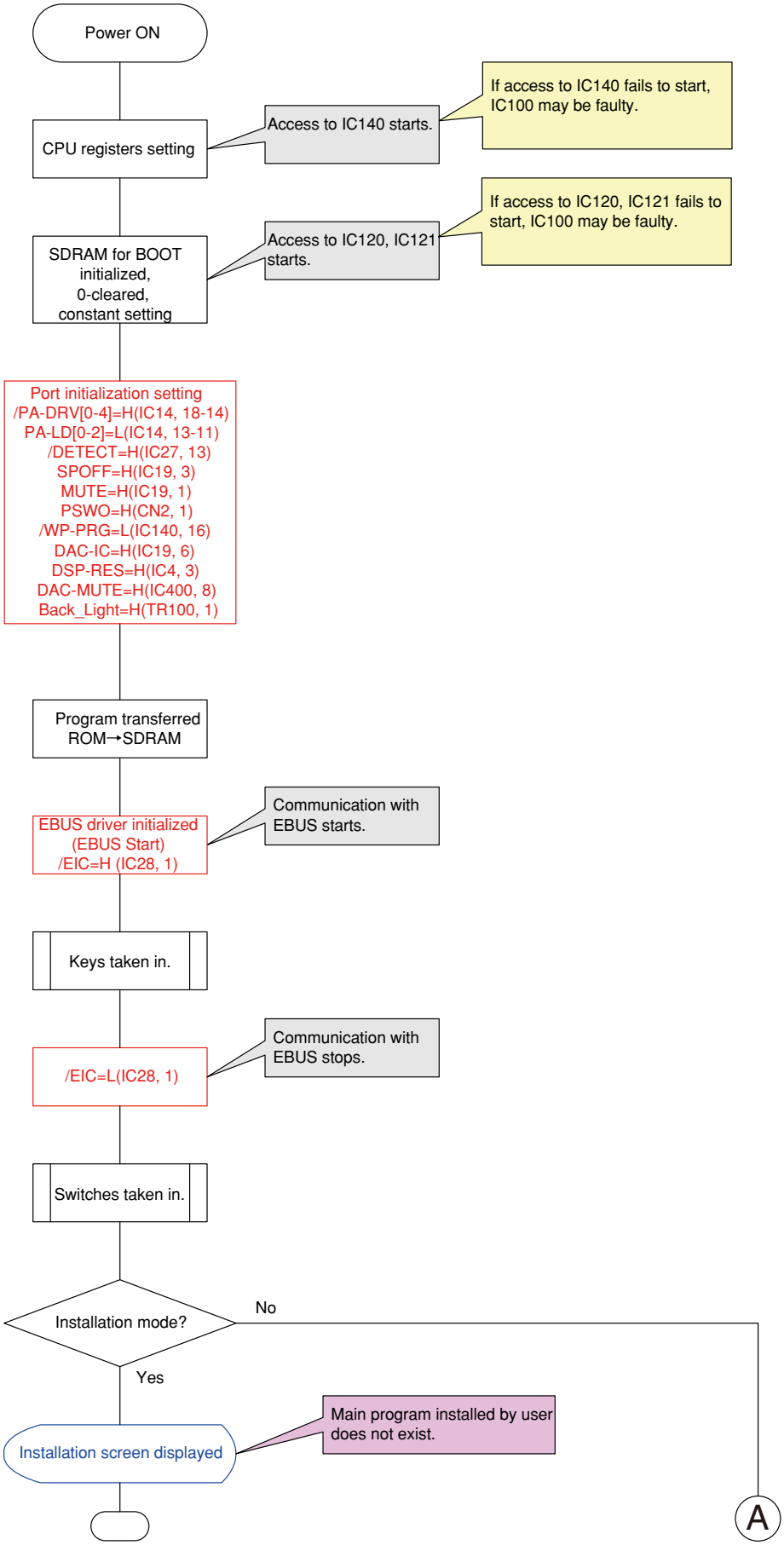

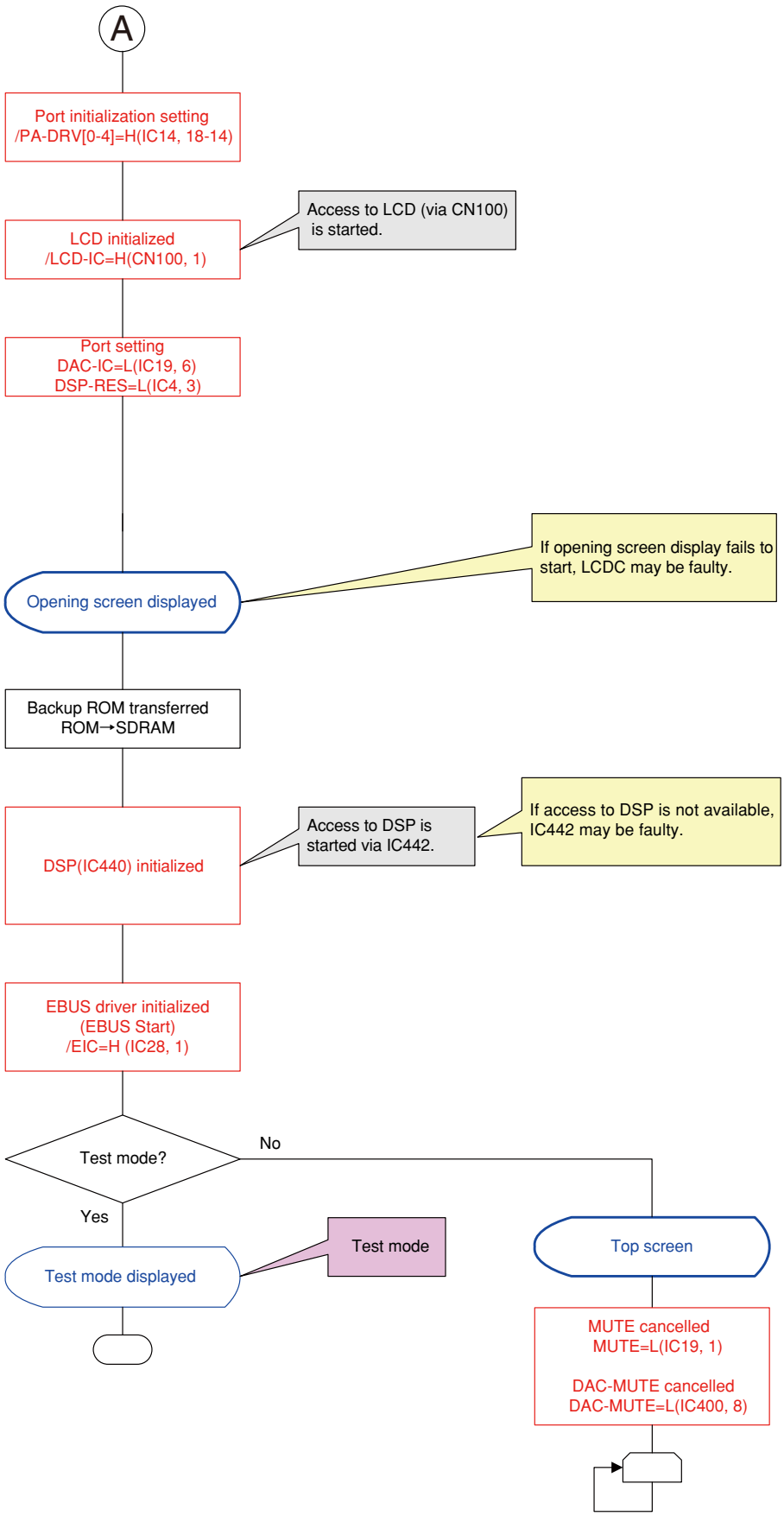
A
Port initialization setting
/PA-DRV[0-4]=H(IC14, 18-14)
LCD initialized
/LCD-IC=H(CN100, 1)
Access to LCD (via CN100) is started.
Port setting
DAC-IC=L(IC19, 6)
DSP-RES=L(IC4, 3)
Opening screen displayed
If opening screen display fails to start, LCDC may be faulty.
Backup ROM transferred
ROM→SDRAM
DSP(IC440) initialized
Access to DSP is started via IC442.
If access to DSP is not available, IC442 may be faulty.
EBUS driver initialized
(EBUS Start)
/EIC=H (IC28, 1)
Test mode?
No
Yes
Test mode displayed
Test mode
Top screen
MUTE cancelled
MUTE=L(IC19, 1)
DAC-MUTE cancelled
DAC-MUTE=L(IC400, 8)

# ■ MESSAGE LIST

Some message display remains open. In this case, press the [EXIT] button to close message display.

| Message | Meaning |
|---|---|
| **Access error** | The operation has failed. The following causes can be considered. If the following are not responsible, the file may be damaged.<br>• The file operation is wrong. Follow the instructions in “Handling Song Files” or “Backup”/“Restore”.<br>• The connected USB flash memory is not compatible with this instrument.<br>• The protected Song on which you attempted the operation is defective. |
| **Cannot be executed** | The operation has failed. The following causes can be considered. Solve the causes, and try again.<br>• The file operation you attempted cannot be executed to Preset Songs or an Audio Song.<br>• The Song file operation cannot be made to an empty Song file or NoSong.<br>**NoSong**: This is displayed when you select a folder which does not contain any Songs. |
| **Change to Current Tempo** | This message indicates that you are applying the current tempo to the selected Song. |
| **Change to Current Voice** | This message indicates that you are changing the Voice of the Song with the current Voice. |
| **Completed** | This message indicates that the operation is completed. Go on to the next step. |
| **Completed**<br>**Restart now** | Restore is completed. The instrument is automatically turned on again. |
| **Convert canceled** | This message appears when the convert operation is canceled. |
| **Convert completed to USB/ USERFILES/** | This message appears when the convert operation to the “USER FILES” folder on a USB flash memory is completed. |
| **Convert to Audio** | This message appears during the convert operation. |
| **Copy completed to USB/ USERFILES/** | This message appears when the copy operation to the “USER FILES” folder on a USB flash memory is completed. |
| **Copy completed to User** | This message appears when the copy operation to the “User” on this instrument is completed. |
| **Device busy** | The operation, such as converting to the Audio Song or Audio Song playback/recording, has failed. This message appears when you attempt to use a USB flash memory to which recording/deleting operations are repeated. Execute the Format operation after making sure there is no important data in the USB flash memory, and try again. |
| **Device removed** | This message appears when the USB flash memory is removed from the instrument. |
| **Duplicate name** | This message indicates that an identically named file already exists. Rename the file. |
| **Executing** | The instrument is executing the operation. Wait until the message disappears, then go on to the next step. |
| **Factory set executing**<br>**Memory Song excluded** | The default settings (except the Songs in the “User”) have been restored.<br>This message also appears if you press and hold down the C7 key and turn on the power to the instrument. |
| **Factory set executing**<br>**Memory Song included** | The default settings (including the Songs in the “User”) have been restored. |
| **FactorySet Completed**<br>**Restart** | Factory set is completed. The instrument is then restarted. |
| **Incompatible device** | This message appears when an incompatible USB flash memory is connected. Use a device whose compatibility has been confirmed by Yamaha. |
| **Internal hardware error** | A malfunction has occurred in the instrument. |
| **Last power off invalid**<br>**Checking memory** | This message appears when the power is turned on after turning off the power while handling a Song file or saving a backup file. The internal memory is being checked while this message appears. If the internal settings are damaged, they will be reset to the default settings. If the Songs in the “User” are damaged, they will be deleted. |

| Message | Meaning |
|---|---|
| **Maximum no. of devices exceeded** | The number of devices exceed the limitation. Up to two USB devices can be connected simultaneously. |
| **Memory full** | Since the capacity and the number of files in the "User"/USB flash memory are full, the operation cannot be completed. Delete some Songs in the "User"/USB flash memory or move Songs to another USB flash memory, and try again. |
| **Move completed to USB/ USERFILES/** | This message appears when the move operation to the "USER FILES" folder on a USB flash memory is completed. |
| **Move completed to User** | This message appears when the move operation to "User" on the instrument is completed. |
| **No device** | A USB flash memory was not connected to the instrument when you attempted to perform a device-related operation. Connect the device, and try again. |
| **No response from USB device** | The instrument cannot communicate with the connected USB device. Redo the connection. If you still see this message, the USB device may be damaged. |
| **Notice: Protected Song** | This message appears when you attempt to handle the Protected Song. |
| **Please wait** | The instrument is processing the data. Wait until the message disappears, then go on to the next step. |
| **Protected device** | This message appears when you attempt a file operation, record your performance or save the data on a read-only USB flash memory. Cancel the read-only setting, if possible, and try again. If you still see this message, the USB flash memory is internally protected (such as commercially available music data). You cannot make the file operation or record your performance to such a device. |
| **Protected Song** | You attempted a file operation to a Protected Song or read-only file. Data of those types have handling limitations, and also cannot be used for editing. Use a read-only file after cancelling the read-only setting. |
| **Remaining space on drive is low** | Since the remaining space on the "User"/USB flash memory is low, delete any unnecessary files before recording. |
| **Same file name exists** | This message appears to prompt you to confirm if overwriting or not when executing a Copy/ Move/MIDItoAudio operation. |
| **Song error** | This message appears, if a problem is found with the Song data when you select a Song or while the Song is playing. In this case, reselect the Song, and try again to play back. If the message still appears, the Song data may have been damaged. |
| **Song too large** | The size of Song data (MIDI/Audio) exceeds the limitation. The following causes can be considered.<br>• The Song size you attempt to play back exceeds the limitation. The limitation for playback is approx. 500KB (MIDI), 80 minutes (Audio).<br>• The Song size exceeds the limitation during recording. The limitation for recording is approx. 500KB (MIDI), 80 minutes (Audio). The Audio recording will end automatically and the recorded data before the end is saved; however, the MIDI Song will be lost.<br>• The Song size exceeds the limitation during converting a MIDI Song to an Audio Song. The limitation is 80 minutes (Audio). |
| **System limit** | This message appears when the number of files exceeds the system limit. The maximum number of files which can be saved in a folder is 250. Try again after deleting/moving the unnecessary file(s). |
| **Unformatted device** | This message appears when you attempt to use an unformatted USB flash memory. Format it, and try again. |
| **Unsupported device** | This message appears when an unsupported USB flash memory is connected. Use a device whose compatibility has been confirmed by Yamaha. |
| **USB device overcurrent error** | Communication with the USB device has been cut off because of an abnormal power surge to the device. Disconnect the USB device from the USB [TO DEVICE] terminal and turn the [⏻] (Standby/On) switch of the instrument standby and on again. |

| Message | Meaning |
|---|---|
| **USB hub hierarchical error** | The USB hub is connected in two layers. USB hub use is limited to one layer. |
| **USB power consumption exceeded** | A bus-powered USB hub is usually recommended. When this message appears, however, use a self-powered USB hub (with its own power source) and turn the power to on, or use a device whose compatibility has been confirmed by Yamaha. |
| **Wrong device** | The file operation cannot be made to the connected USB flash memory. The following causes can be considered.<br>• The USB flash memory in not formatted. Format it, and try again.<br>• The number of files exceeds the system limit. The maximum number of files and folders which can be saved in a folder is 250. Try again after deleting/moving the unnecessary file(s). |
| **Wrong name** | The Song name is not appropriate. This message appears during the “Renaming files” operation because of the following causes. Rename the Song correctly.<br>• No character has been input.<br>• You used a period or space at the beginning/ending of a Song name. |

Clavinova®

# CLP-565GP/CLP-565GPWH

# PARTS LIST

## ■ CONTENTS


OVERALL ASSEMBLY ..... 2
MAIN UNIT ..... 5
PEDAL BOX ASSEMBLY ..... 14
PEDAL ASSEMBLY ..... 16
TOP BOARD S ASSEMBLY ..... 18
TOP BOARD L ASSEMBLY ..... 20
KEY BLOCK R ASSEMBLY ..... 21
KEY BLOCK L ASSEMBLY ..... 22
KEY COVER ASSEMBLY ..... 24
JACK ASSEMBLY ..... 25
HP/USB ASSEMBLY ..... 26
BENCH (BC-108PE/BC-108WH) ..... 27
KEYBOARD ASSEMBLY ..... 28
ELECTRICAL PARTS ..... 30 – 46


**Notes : DESTINATION ABBREVIATIONS**

| | |
|---|---|
| A : Australian model | M : South African model |
| B : British model | O : Chinese model |
| C : Canadian model | Q : South-east Asia model |
| D : German model | T : Taiwan model |
| E : European model | U : U.S.A. model |
| F : French model | V : General export model (110V) |
| H : North European model | W: General export model (220V) |
| I : Indonesian model | N,X: General export model |
| J : Japanese model | Y : Export model |
| K : Korean model | |

## ■ WARNING

Components having special characteristics are marked ⚠ and must be replaced with parts having specification equal to those originally installed.

- The numbers “QTY” show quantities for each unit.
- The parts with “--” in “PART NO.” are not available as spare parts.
- This mark “ } ” in the REMARKS column means these parts are interchangeable.
- The second letter of the shaded ( ) part number is O, not zero.
- The second letter of the shaded ( ) part number is I, not one.

# ■ OVERALL ASSEMBLY

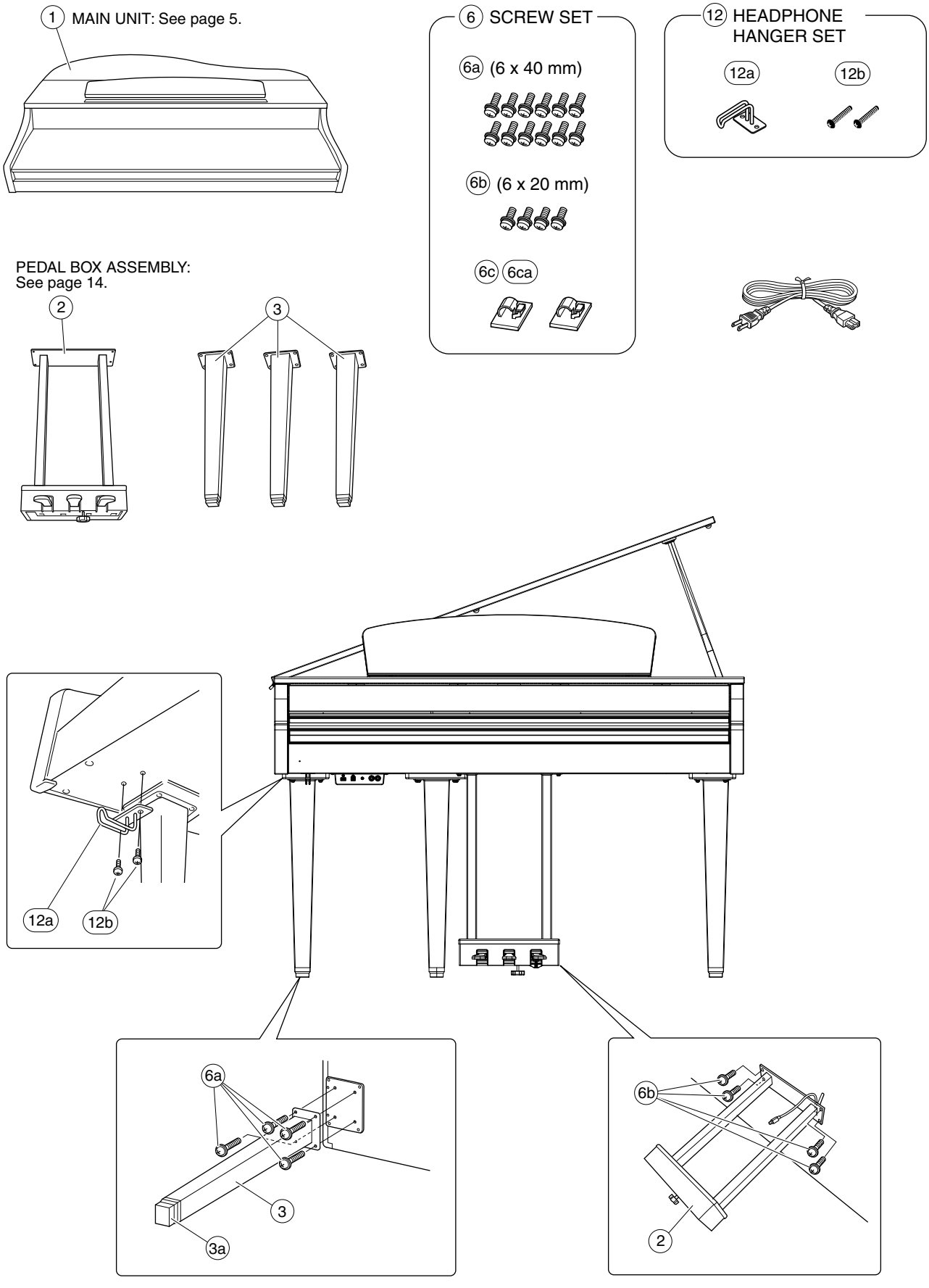

## ● CLP-565GP

| REF NO. | PART NO. | DESCRIPTION | | 部品名 | REMARKS | QTY | RANK |
|---|---|---|---|---|---|---|---|
| | | OVERALL ASSEMBLY | | 総組立 | CLP-565GP | | |
| 1 | -- | MAIN UNIT U | | メインユニットU | U (ZJ19750) | | |
| 1 | -- | MAIN UNIT E | | メインユニットE | E,B (ZJ19740) | | |
| 1 | -- | MAIN UNIT Y | | メインユニットY | I,Y,P (ZJ19760) | | |
| 2 | -- | PEDAL BOX ASSEMBLY | | ペダルBOXAss'y | (ZJ19860) | | |
| 3 | **WH350900** | LEG ASSEMBLY | | 脚柱Ass'y | | 3 | 26 |
| 3a | **WE735900** | LEG CAP | | 脚キャップ成形品 | | | 03 |
| 6 | **WF789500** | SCREW SET | | ネジセット | | | 07 |
| 6a | -- | PAN HEAD SCREW | 6.0X40 MFZN2B3 SP | 小ネジ十PAN | (WE99570) | 12 | |
| 6b | -- | PAN HEAD SCREW | 6.0X20 MFZN2B3 SW | 小ネジ十PAN | (WF00330) | 4 | |
| 6c | -- | CORD CLAMP SET | | コードクランプセット | (WA29790) | | |
| 6ca | -- | CORD CLAMPER DKN-5B(VHB) | DKN-5(VHB) | NKクランプ | (VP59210) | | 03 |
| 6ca | -- | CORD CLAMPER | OD-5 PT.IMAI | CSクランプ | (WB09080) | | 01 |
| 12 | -- | HEADPHONE HANGER SET | | ヘッドホンハンガーセット | (V874060) | | |
| 12a | **V897260R** | HEADPHONE HANGER | | ヘッドホンハンガー | | | 04 |
| 12b | **WF00080R** | TRUSS HEAD SCREW | 4.0X10 MFZN2B3 | 小ネジ十TRUS | | 2 | 01 |
| | | | | | | | |
| | | ACCESSORIES | | 付属品 | | | |
| ⚠ | **ZC295100** | AC CORD SET | UC 2P 7A 2.44m | 電源コードセット | U | | 05 |
| ⚠ | **V2917100** | AC CORD SET | E 2P 2.5m 2.5A | 電源コードセット | E,I,Y | | 05 |
| ⚠ | **V3126501** | AC CORD SET | B 2P 2.5m | 電源コードセット | B | | |
| ⚠ | **WU795100** | AC CORD SET | BRA 2P 2.5m 2.5A | 電源コードセット | P | | 06 |
| | -- | BENCH | BC-108PE | 同梱品セット椅子 | U,I,Y,P (ZH47000) | | |
| ⚠ | **VK72610R** | AC OUTLET CONNECTOR | CCT5902-0701MFZ | 変換アダプター | Y | | 03 |
| | | | | | | | |
| | | TOOL | | 工具 | | | |
| | **TX000671** | ROD | | ロッド | | | 99 |

✻: New Parts

RANK: Japan only

## ● CLP-565GPWH

| | REF NO. | PART NO. | DESCRIPTION | | 部品名 | REMARKS | | QTY | RANK |
|---|---|---|---|---|---|---|---|---|---|
| | | | OVERALL ASSEMBLY | | 総組立 | CLP-565GPWH | | | |
| | 1 | -- | MAIN UNIT E | | メインユニットE | E,B | (ZJ19770) | | |
| | 1 | -- | MAIN UNIT Y | | メインユニットY | I,Y,P | (ZJ19780) | | |
| | 2 | -- | PEDAL BOX ASSEMBLY | | Pボックスアッシ | | (ZJ92680) | | |
| * | 3 | **ZJ927200** | LEG ASSEMBLY | | 脚柱アッシ | | | 3 | |
| * | 3a | **ZJ882700** | LEG CAP WHITE | | 脚キャップ成形品 | | | | |
| * | 6 | **ZJ890400** | SCREW SET | | ネジセット | | | | |
| | 6a | -- | PAN HEAD SCREW | 6.0X40 MFZN2W3 SP | 小ネジ十PAN | | (ZJ89050) | 12 | |
| | 6b | -- | PAN HEAD SCREW | 6.0X20 MFZN2W3 SW | 小ネジ十PAN | | (ZJ89060) | 4 | |
| | 6c | -- | CORD CLAMP SET | | コードクランプセット | | (WA29790) | | |
| | 6ca | -- | CORD CLAMPER DKN-5B(VHB) | DKN-5(VHB) | NKクランプ | | (VP59210) | | 03 |
| | 6ca | -- | CORD CLAMPER | OD-5 PT.IMAI | CSクランプ | | (WB09080) | | 01 |
| | 12 | -- | HEADPHONE HANGER SET | | ヘッドホンハンガーセット | | (ZJ89800) | | |
| * | 12a | **ZJ755900** | HEADPHONE HANGER | | HPハンガー塗装品 | | | | |
| * | 12b | **ZJ897800** | TRUSS HEAD SCREW | 4.0X10 MFZN2W3 | 小ネジ十TRUS | | | 2 | |
| | | | | | | | | | |
| | | | ACCESSORIES | | 付属品 | | | | |
| ⚠ | | **V2917100** | AC CORD SET | E 2P 2.5m 2.5A | 電源コードセット | E,I,Y | | | 05 |
| ⚠ | | **V3126501** | AC CORD SET | B 2P 2.5m | 電源コードセット | B | | | |
| ⚠ | | **WU795100** | AC CORD SET | BRA 2P 2.5m 2.5A | 電源コードセット | P | | | 06 |
| | | -- | BENCH | BC-108WH | 同梱品セット椅子 | I,Y,P | (ZH46990) | | |
| ⚠ | | **VK72610R** | AC OUTLET CONNECTOR | CCT5902-0701MFZ | 変換アダプター | Y | | | 03 |
| | | | | | | | | | |
| | | | TOOL | | 工具 | | | | |
| | | **TX000671** | ROD | | ロッド | | | | 99 |

*: New Parts

RANK: Japan only

# ■ MAIN UNIT

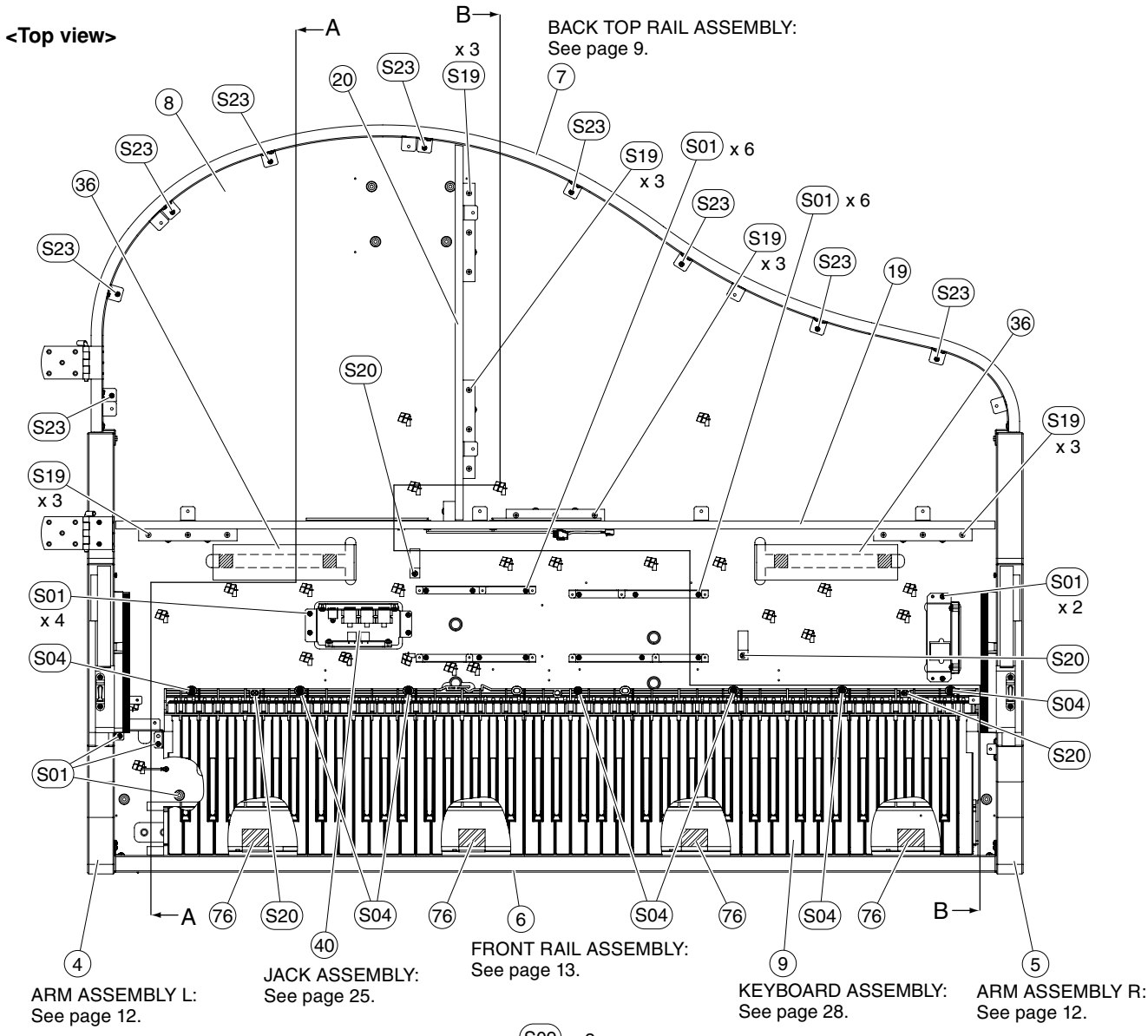


● SEC. A-A

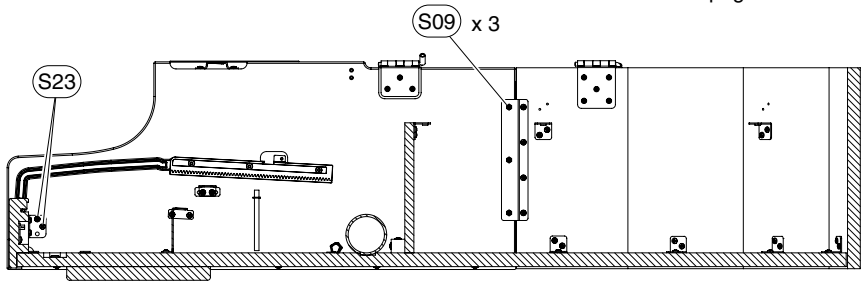


● SEC. B-B

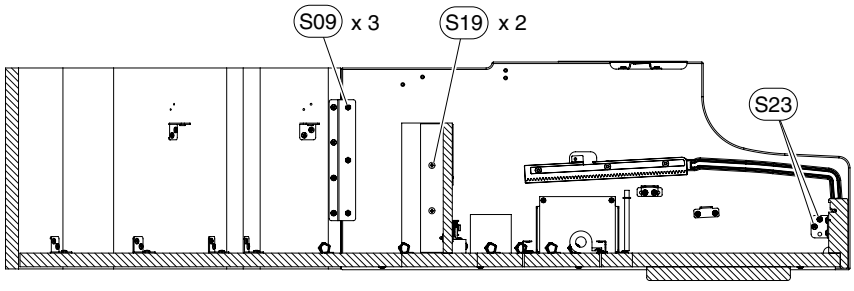

**<Bottom view>**

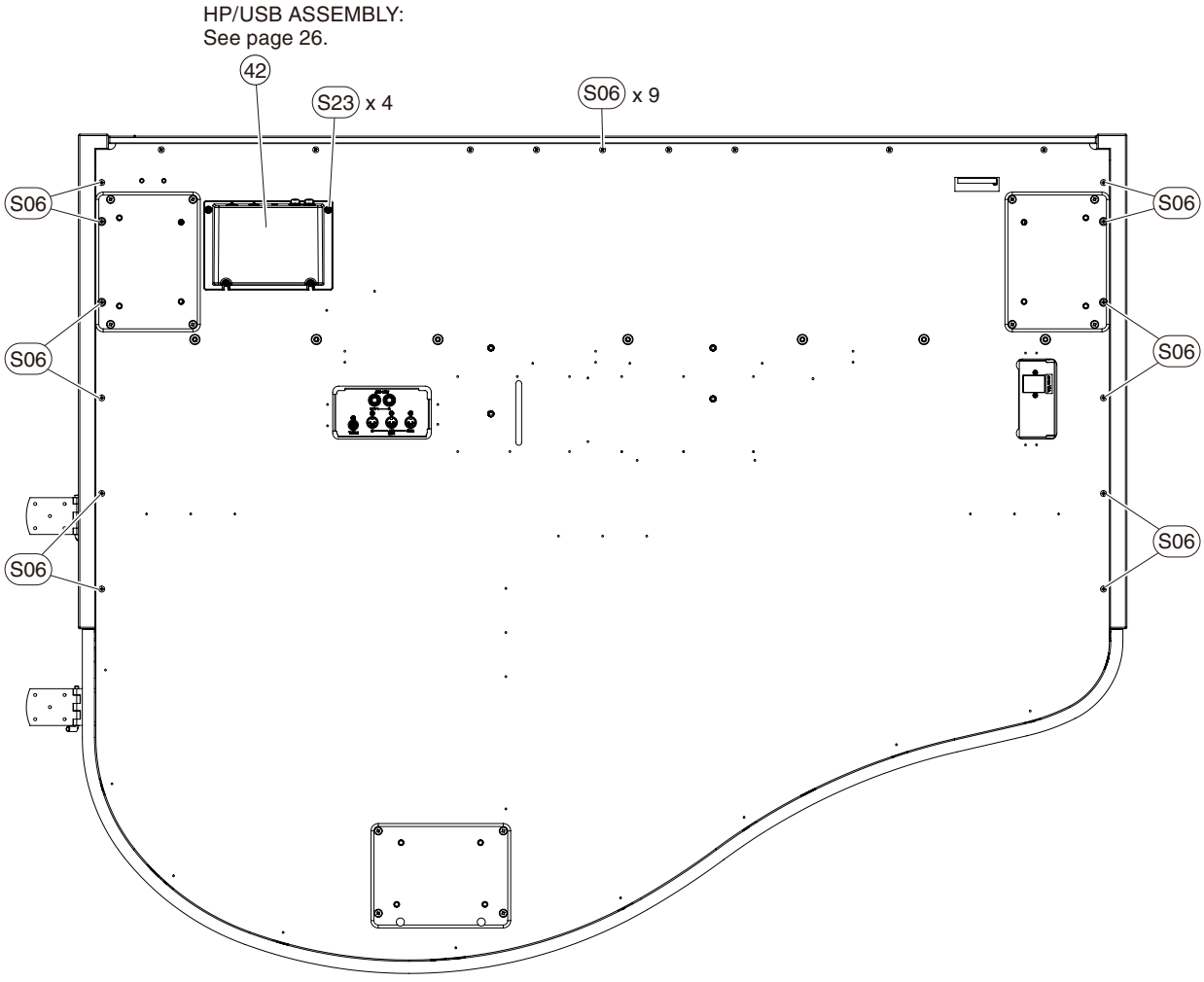
HP/USB ASSEMBLY:
See page 26.
42
S23 x 4
S06 x 9
S06
S06
S06
S06
S06
S06

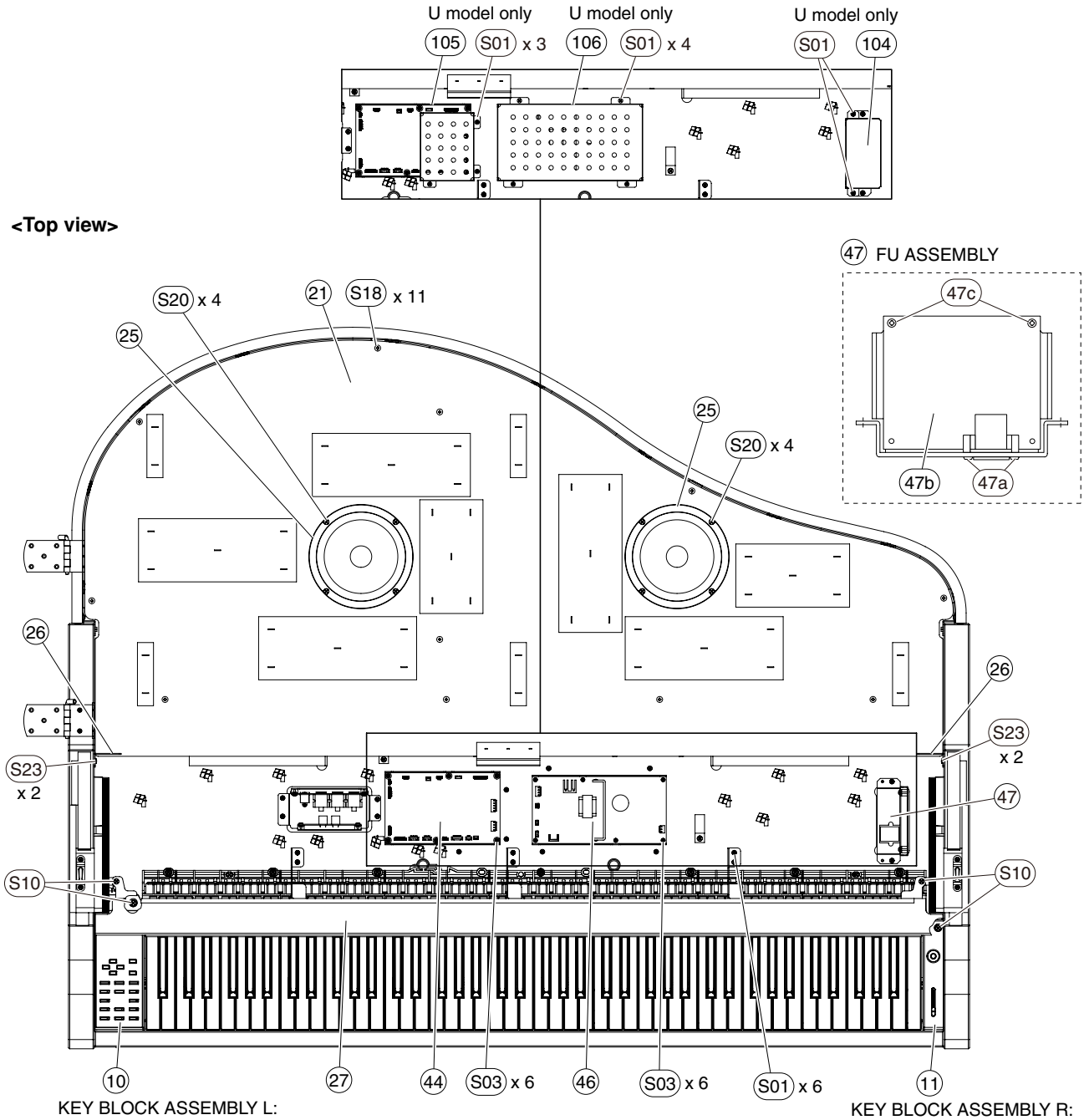
U model only
105
S01 x 3
U model only
106
S01 x 4
U model only
S01
104
<Top view>
47 FU ASSEMBLY
47c
47b
47a
S20 x 4
21
S18 x 11
25
25
S20 x 4
26
26
S23
x 2
S23
x 2
47
S10
S10
10
27
44
S03 x 6
46
S03 x 6
S01 x 6
11
KEY BLOCK ASSEMBLY L:
See page 22.
KEY BLOCK ASSEMBLY R:
See page 21.

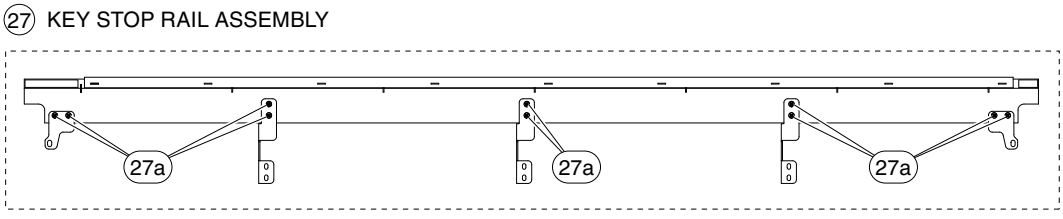
27 KEY STOP RAIL ASSEMBLY
27a
27a
27a

**<Top view>**

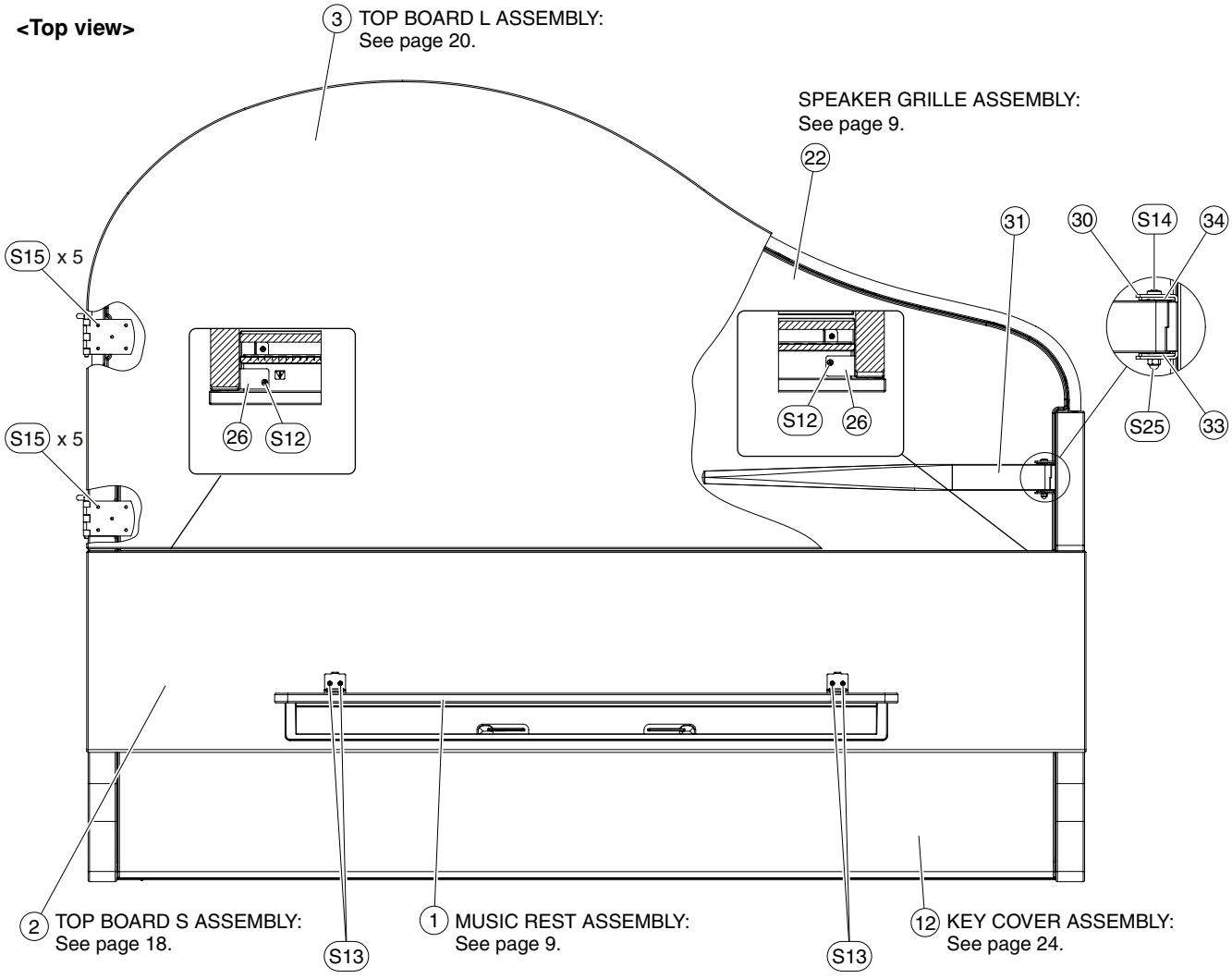


**<Side view>**

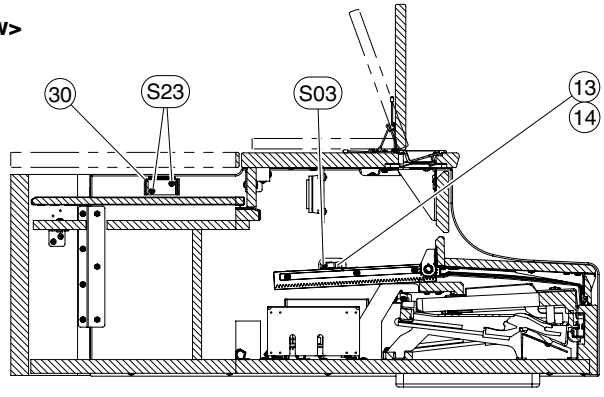

(1) MUSIC RESET ASSEMBLY

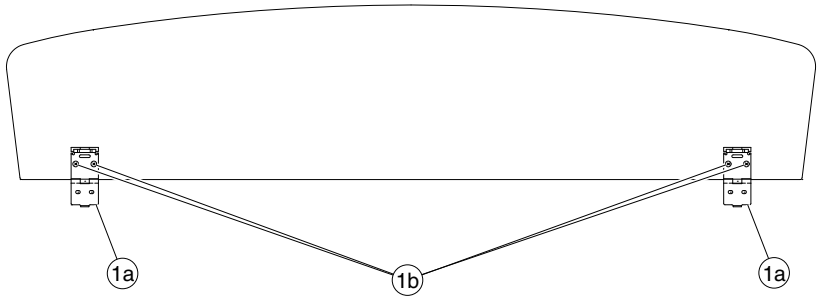


(1a) HINGE ASSEMBLY, MUSIC

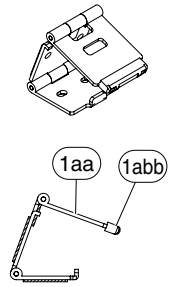


(7) BACK TOP RAIL ASSEMBLY

**<Top view>**

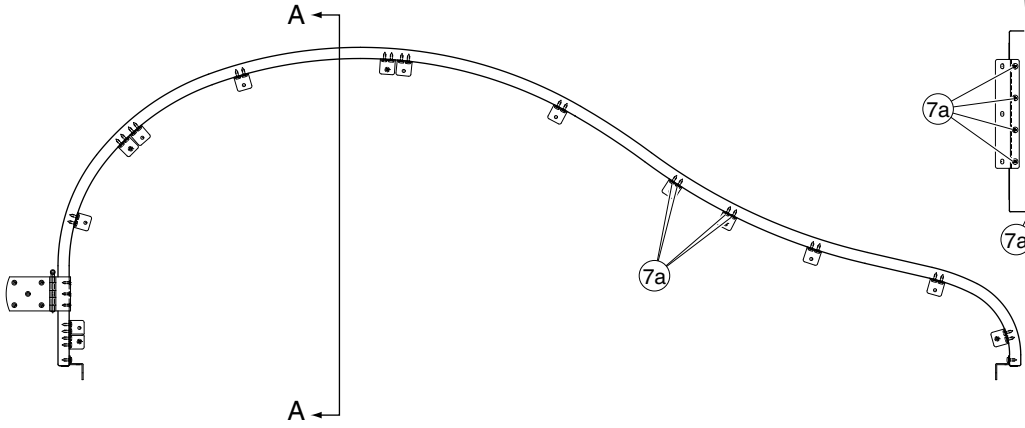


● SEC. A-A

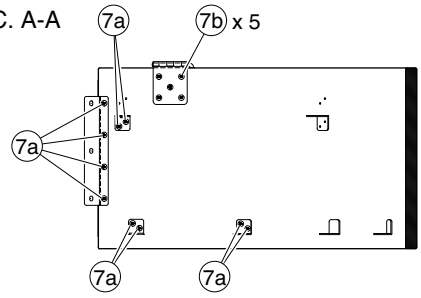


(22) SPEAKER GRILLE ASSEMBLY

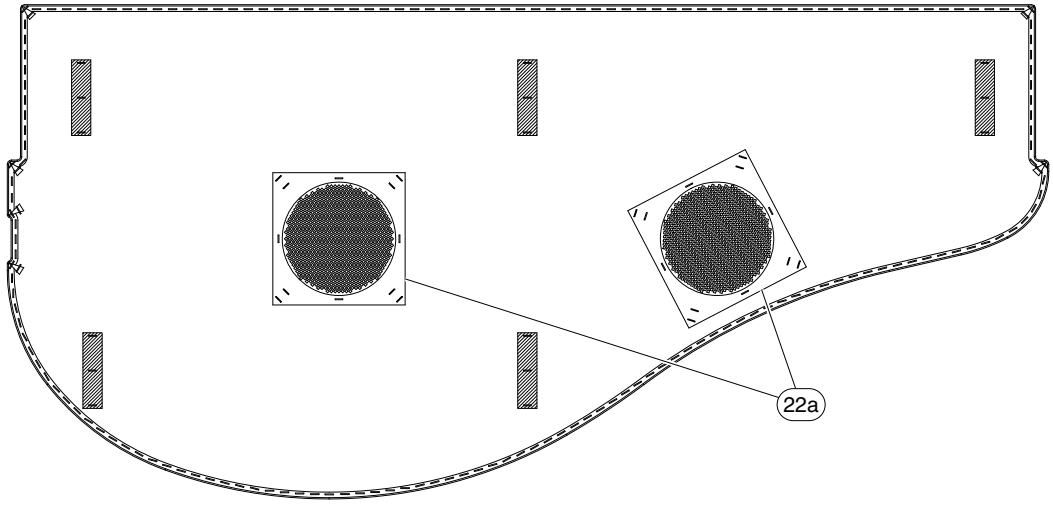

## ● CLP-565GP

| | REF NO. | PART NO. | DESCRIPTION | | 部品名 | REMARKS | QTY | RANK |
|---|---|---|---|---|---|---|---|---|
| | | | MAIN UNIT | | メインユニット | CLP-565GP | | |
| | | -- | MAIN UNIT U | | メインユニットU | U (ZJ19750) | | |
| | | -- | MAIN UNIT E | | メインユニットE | E,B (ZJ19740) | | |
| | | -- | MAIN UNIT Y | | メインユニットY | I,Y,P (ZJ19760) | | |
| | A | -- | COMPOSITE COMMON PARTS | | 共通部品構成 | (ZJ19800) | | |
| | 104 | **WS410600** | FU COVER | | FUカバー | U | | 04 |
| | 105 | -- | DM COVER | | DMカバー | U (ZJ25530) | | |
| | 106 | -- | PS COVER | | PSカバー | U (ZJ68490) | | |
| | S01 | **WF831100** | BIND HEAD TAPPING SCREW-1 | 3.5X11 MFZN2W3 | TP#1+BIND | U | 9 | 01 |
| | | | | | | | | |
| | | -- | COMPOSITE COMMON PARTS | | 共通部品構成 | (ZJ19800) | | |
| | 1 | **WW282200** | MUSIC REST ASSEMBLY | | 譜面板Ass'y | | | 25 |
| | 1a | **WU480200** | HINGE ASSEMBLY, MUSIC REST | | 譜面蝶番Ass'y | | 2 | 04 |
| | 1b | **WF10940R** | BIND HEAD TAPPING SCREW-1 | 3.0X10 MFZN2B3 | TP#1+BIND | | 4 | 01 |
| | 2 | -- | TOP BOARD S ASSEMBLY | SMALL | 屋根小Ass'y | (ZJ20710) | | |
| * | 3 | **ZJ207300** | TOP BOARD L ASSEMBLY | LARGE | 屋根大Ass'y | | | |
| * | 4 | **ZJ207500** | ARM ASSEMBLY L | LEFT | 腕木Ass'y L | | | |
| * | 5 | **ZJ207700** | ARM ASSEMBLY R | RIGHT | 腕木Ass'y R | | | |
| * | 6 | **ZJ207900** | FRONT RAIL ASSEMBLY | | 口棒Ass'y | | | |
| * | 7 | **ZJ208100** | BACK TOP RAIL ASSEMBLY | | 背面框Ass'y | | | |
| | 7a | **WF831100** | BIND HEAD TAPPING SCREW-1 | 3.5X11 MFZN2W3 | TP#1+BIND | | 36 | 01 |
| | 7b | **ZA850300** | OVAL HEAD TAPPING SCREW-1 | 3.0X14 MFNI | 十丸皿TP 1種 | | 5 | 01 |
| | 8 | -- | KEYBED ASSEMBLY | | 棚板集成 | (ZJ20830) | | |
| | 9 | **ZH197300** | GH3 GKS KEYBOARD ASSEMBLY | AI ONLY W KEY ESC | GH3 GKS鍵盤 | | | |
| | 10 | -- | KEY BLOCK ASSEMBLY L | LEFT | 拍子木Ass'y L | (ZH92570) | | |
| | 11 | -- | KEY BLOCK ASSEMBLY R | RIGHT | 拍子木Ass'y R | (ZH93060) | | |
| * | 12 | **ZK758000** | KEY COVER ASSEMBLY | | スライド蓋Ass'y | | | |
| | 13 | **VS312102** | RACK COVER L BLACK | LEFT | ラックカバー L | | | 01 |
| | 14 | **VS31220R** | RACK COVER R BLACK | RIGHT | ラックカバー R | | | 03 |
| | 19 | -- | PARTITION ASSEMBLY A | | 仕切り板Ass'y A | (ZJ20870) | | |
| | 20 | -- | PARTITION ASSEMBLY B | | 仕切り板Ass'y B | (ZJ20880) | | |
| | 21 | -- | PARTITION ASSEMBLY C | | 仕切り板Ass'y C | (ZJ20890) | | |
| | 22 | -- | SPEAKER GRILLE ASSEMBLY | | SPグリル集成 | (ZJ20900) | | |
| | 22a | -- | METAL NET | 175X175 | 金網 | (V999600) | 2 | 05 |
| | 25 | **X6296B00** | LOUD SPEAKER | 16.0 cm 6 ohm 40W | スピーカ | WOOFER | 2 | 09 |
| | 25 | **X6296C00** | LOUD SPEAKER | 16.0 cm 6 ohm 45W | スピーカ | | 2 | 08 |
| | 26 | -- | TOP BOARD STOPPER | | 屋根ストッパー塗装品 | (WH49680) | 2 | |
| | 27 | **ZH300800** | KEY STOP RAIL ASSEMBLY | | 鍵盤押えAss'y | | | |
| | 27a | **WE97080R** | BIND HEAD TAPPING SCREW-1 | 3.5X10 MFZN2W3 | TP#1+BIND | | 10 | 01 |
| | 30 | -- | SUPPORT BAR ANGLE ASSEMBLY | | 支持棒金具Ass'y | (ZA50790) | | |
| | 31 | **WW229300** | SUPPORT BAR | | 屋根支持棒塗装品 | | | 14 |
| | 33 | **VY94120R** | BUSHING F | FRONT | ブッシュ F | | | 03 |
| | 34 | **VY94130R** | BUSHING R | REAR | ブッシュ R | | | 03 |
| | 36 | -- | AD RESONATOR (SPONGE) | | AD共鳴器スポンジ付 | (ZC35280) | 2 | 04 |
| | 40 | **ZH431200** | JACK ASSEMBLY | | ジャックAss'y | | | |
| * | 42 | **ZK549600** | HP/USB ASSEMBLY | | HP/USB Ass'y | | | |
| | 44 | **ZJ421700** | CIRCUIT BOARD | DM | DMシート | | | |
| | 46 | **ZJ436200** | CIRCUIT BOARD | PS | PSシート | | | |
| | 47 | **ZJ054400** | FU ASSEMBLY | | FU Ass'y | | | |
| | 47a | **WE774400** | BIND HEAD TAPPING SCREW-B | 3.0X8 MFZN2B3 | Bタイト+BIND | | 2 | |
| | 47b | -- | CIRCUIT BOARD | FU | FUシート | (ZJ05450) | | |
| | 47c | **WE98740R** | BIND HEAD TAPPING SCREW-B | 3.0X12 MFZN2W3 | Bタイト+BIND | | 2 | 01 |
| | 76 | **WA530900** | ELECTRICAL ADHESIVE TAPE | AL-40 40mmX20m | 導電性粘着テープ | | | 18 |
| | S01 | **WF831100** | BIND HEAD TAPPING SCREW-1 | 3.5X11 MFZN2W3 | TP#1+BIND | | 27 | 01 |
| | S03 | **WE774300** | BIND HEAD TAPPING SCREW-B | 3.0X8 MFZN2W3 | Bタイト+BIND | | 14 | |
| | S04 | **WF786700** | PAN HEAD SCREW | 5.0X30 MFZN2W3 | 小ネジ+PAN | | 7 | 01 |
| | S06 | **WH513700** | TRUSS HEAD TAPPING SCREW-1 | 3.5X35 MFZN2W3 | TP#1+TRUS | | 21 | 01 |
| | S09 | **WF746600** | HEXAGONAL HEAD TAPPING SCREW-1 | 4.0X16 MFZN2W3 | TP#1+HEX | | 6 | 01 |
| | S10 | **WE97450R** | BIND HEAD TAPPING SCREW-B | 4.0X10 MFZN2W3 | Bタイト+BIND | | 4 | 01 |
| | S12 | **WE98310R** | BIND HEAD SCREW | 4.0X14 MFZN2B3 | 小ネジ+BIND | | 2 | 01 |
| | S13 | **WE971200** | BIND HEAD TAPPING SCREW-1 | 3.0X16 MFZN2B3 | TP#1+BIND | | 4 | |
| | S14 | **ZD046400** | BIND HEAD SCREW | 5.0X50 MFNI33 | 小ネジ+BIND | | | 01 |
| | S15 | **ZA850300** | OVAL HEAD TAPPING SCREW-1 | 3.0X14 MFNI | 十丸皿TP 1種 | | 10 | 01 |
| | S18 | **WF355900** | TRUSS HEAD SCREW | 4.0X16 MFZN2W3 | 小ネジ+TRUS | | 11 | 01 |
| | S19 | **WE97990R** | TRUSS HEAD TAPPING SCREW-1 | 3.5X30 MFZN2W3 | TP#1+TRUS | | 17 | 01 |
| | S20 | **WF10950R** | BIND HEAD TAPPING SCREW-1 | 4.0X16 MFZN2W3 | TP#1+BIND | | 12 | 01 |
| | S23 | **WE95510R** | BIND HEAD TAPPING SCREW-1 | 3.5X16 MFZN2B3 | TP#1+BIND | | 23 | 01 |
| | S25 | **ZD046600** | HEXAGONAL CAP NUT | #3 M5 MFNI33 | ナット 6角袋 | | | 01 |

*: New Parts

RANK: Japan only

## ● CLP-565GPWH

| | REF NO. | PART NO. | DESCRIPTION | | 部品名 | REMARKS | QTY | RANK |
|---|---|---|---|---|---|---|---|---|
| | | | MAIN UNIT | | メインユニット | CLP-565GPWH | | |
| | | -- | MAIN UNIT E | | メインユニットE | E,B (ZJ19770) | | |
| | | -- | MAIN UNIT Y | | メインユニットY | I,Y,P (ZJ19780) | | |
| | A | -- | COMPOSITE COMMON PARTS | | 共通部品構成 | (ZJ19810) | | |
| | | -- | COMPOSITE COMMON PARTS | | 共通部品構成 | (ZJ19810) | | |
| * | 1 | ZJ932100 | MUSIC REST ASSEMBLY | | 譜面板Ａｓｓ’ｙ | | | |
| * | 1a | ZJ932400 | HINGE ASSEMBLY, MUSIC REST | | 譜面蝶番Ａｓｓ’ｙ | | 2 | |
| * | 1aa | ZJ766400 | HINGE, MUSIC REST WHITE | | 譜面蝶番 | | | |
| * | 1abb | ZJ776800 | HINGE CAP WHITE | | 蝶番キャップ | | | |
| * | 1b | ZJ890300 | BIND HEAD TAPPING SCREW-1 | 3.0X10 WHITE PAINT | ＴＰ＃１＋ＢＩＮＤ | | 4 | |
| | 2 | -- | TOP BOARD S ASSEMBLY | SMALL | 屋根小Ａｓｓ’ｙ | (ZJ20720) | | |
| * | 3 | ZJ207400 | TOP BOARD L ASSEMBLY | LARGE | 屋根大Ａｓｓ’ｙ | | | |
| * | 4 | ZJ207600 | ARM ASSEMBLY L | LEFT | 腕木Ａｓｓ’ｙ Ｌ | | | |
| * | 5 | ZJ207800 | ARM ASSEMBLY R | RIGHT | 腕木Ａｓｓ’ｙ Ｒ | | | |
| * | 6 | ZJ208000 | FRONT RAIL ASSEMBLY | | 口棒Ａｓｓ’ｙ | | | |
| * | 7 | ZJ208200 | BACK TOP RAIL ASSEMBLY | | 背面框Ａｓｓ’ｙ | | | |
| | 7a | WF831100 | BIND HEAD TAPPING SCREW-1 | 3.5X11 MFZN2W3 | ＴＰ＃１＋ＢＩＮＤ | | 36 | 01 |
| | 7b | V629510R | OVAL HEAD TAPPING SCREW-1 | 3.0X14 BS | 十丸皿ＴＰ １種 | | 5 | 01 |
| | 8 | -- | KEYBED ASSEMBLY | | 棚板集成 | (ZJ20840) | | |
| | 9 | ZH197300 | GH3 GKS KEYBOARD ASSEMBLY | AI ONLY W KEY ESC | ＧＨ３ ＧＫＳ鍵盤 | | | |
| | 10 | -- | KEY BLOCK ASSEMBLY L | LEFT | 拍子木Ａｓｓ’ｙ Ｌ | (ZH19700) | | |
| | 11 | -- | KEY BLOCK ASSEMBLY R | RIGHT | 拍子木Ａｓｓ’ｙ Ｒ | (ZH42580) | | |
| * | 12 | ZJ208600 | KEY COVER ASSEMBLY | | スライド蓋Ａｓｓ’ｙ | | | |
| | 13 | VS312102 | RACK COVER L BLACK | LEFT | ラックカバー Ｌ | | | 01 |
| | 14 | VS31220R | RACK COVER R BLACK | RIGHT | ラックカバー Ｒ | | | 03 |
| | 19 | -- | PARTITION ASSEMBLY A | | 仕切り板Ａｓｓ’ｙ Ａ | (ZJ20870) | | |
| | 20 | -- | PARTITION ASSEMBLY B | | 仕切り板Ａｓｓ’ｙ Ｂ | (ZJ20880) | | |
| | 21 | -- | PARTITION ASSEMBLY C | | 仕切り板Ａｓｓ’ｙ Ｃ | (ZJ20890) | | |
| | 22 | -- | SPEAKER GRILLE ASSEMBLY | | ＳＰグリル集成 | (ZJ20910) | | |
| | 22a | -- | METAL NET | 175X175 | 金網 | (V999600) | 2 | 05 |
| | 25 | X6296B00 | LOUD SPEAKER | 16.0 cm 6 ohm 40W | スピーカ | WOOFER | 2 | 09 |
| | 25 | X6296C00 | LOUD SPEAKER | 16.0 cm 6 ohm 45W | スピーカ | | 2 | 08 |
| | 26 | -- | TOP BOARD STOPPER | | 屋根ストッパー塗装品 | (ZF56390) | 2 | |
| * | 27 | ZJ286500 | KEY STOP RAIL ASSEMBLY | | 鍵盤押えＡｓｓ’ｙ | | | |
| | 27a | WE97080R | BIND HEAD TAPPING SCREW-1 | 3.5X10 MFZN2W3 | ＴＰ＃１＋ＢＩＮＤ | | 10 | 01 |
| | 30 | -- | SUPPORT BAR ANGLE ASSEMBLY | | 支持棒金具Ａｓｓ’ｙ | (ZF57990) | | |
| | 31 | ZF564000 | SUPPORT BAR | | 屋根支持棒塗装品 | | | 17 |
| | 33 | VY94120R | BUSHING F | FRONT | ブッシュ F | | | 03 |
| | 34 | VY94130R | BUSHING R | REAR | ブッシュ R | | | 03 |
| | 36 | -- | AD RESONATOR (SPONGE) | | ＡＤ共鳴器スポンジ付 | (ZC35280) | 2 | 04 |
| | 40 | ZH431200 | JACK ASSEMBLY | | ジャックＡｓｓ’ｙ | | | |
| * | 42 | ZK549600 | HP/USB ASSEMBLY | | ＨＰ／ＵＳＢ Ａss’ｙ | | | |
| | 44 | ZJ421700 | CIRCUIT BOARD | DM | ＤＭ シート | | | |
| | 46 | ZJ436200 | CIRCUIT BOARD | PS | ＰＳ シート | | | |
| | 47 | ZJ054400 | FU ASSEMBLY | | ＦＵ Ａｓｓ’ｙ | | | |
| | 47a | WE774400 | BIND HEAD TAPPING SCREW-B | 3.0X8 MFZN2B3 | Ｂタイト＋ＢＩＮＤ | | 2 | |
| | 47b | -- | CIRCUIT BOARD | FU | ＦＵ シート | (ZJ05450) | | |
| | 47c | WE98740R | BIND HEAD TAPPING SCREW-B | 3.0X12 MFZN2W3 | Ｂタイト＋ＢＩＮＤ | | 2 | 01 |
| | 76 | WA530900 | ELECTRICAL ADHESIVE TAPE | AL-40 40mmX20m | 導電性粘着テープ | | | 18 |
| | S01 | WF831100 | BIND HEAD TAPPING SCREW-1 | 3.5X11 MFZN2W3 | ＴＰ＃１＋ＢＩＮＤ | | 27 | 01 |
| | S03 | WE774300 | BIND HEAD TAPPING SCREW-B | 3.0X8 MFZN2W3 | Ｂタイト＋ＢＩＮＤ | | 14 | |
| | S04 | WF786700 | PAN HEAD SCREW | 5.0X30 MFZN2W3 | 小ネジ＋ＰＡＮ | | 7 | 01 |
| | S06 | WH513700 | TRUSS HEAD TAPPING SCREW-1 | 3.5X35 MFZN2W3 | ＴＰ＃１＋ＴＲＵＳ | | 21 | 01 |
| | S09 | WF746600 | HEXAGONAL HEAD TAPPING SCREW-1 | 4.0X16 MFZN2W3 | ＴＰ＃１＋ＨＥＸ | | 6 | 01 |
| | S10 | WE97450R | BIND HEAD TAPPING SCREW-B | 4.0X10 MFZN2W3 | Ｂタイト＋ＢＩＮＤ | | 4 | 01 |
| * | S12 | ZJ899300 | BIND HEAD SCREW | 4.0X14 WHITE PAINT | 小ネジ＋ＢＩＮＤ | | 2 | |
| * | S13 | ZJ890200 | BIND HEAD TAPPING SCREW-1 | 3.0X16 WHITE PAINT | ＴＰ＃１＋ＢＩＮＤ | | 4 | |
| * | S14 | ZJ889700 | BIND HEAD SCREW | 5.0X50 EP-FE/CU-ZN | 小ネジ＋ＢＩＮＤ | | | |
| | S15 | V629510R | OVAL HEAD TAPPING SCREW-1 | 3.0X14 BS | 十丸皿ＴＰ １種 | | 10 | 01 |
| | S18 | WF355900 | TRUSS HEAD SCREW | 4.0X16 MFZN2W3 | 小ネジ＋ＴＲＵＳ | | 11 | 01 |
| | S19 | WE97990R | TRUSS HEAD TAPPING SCREW-1 | 3.5X30 MFZN2W3 | ＴＰ＃１＋ＴＲＵＳ | | 17 | 01 |
| | S20 | WF10950R | BIND HEAD TAPPING SCREW-1 | 4.0X16 MFZN2W3 | ＴＰ＃１＋ＢＩＮＤ | | 12 | 01 |
| | S23 | WE95510R | BIND HEAD TAPPING SCREW-1 | 3.5X16 MFZN2B3 | ＴＰ＃１＋ＢＩＮＤ | | 23 | 01 |
| * | S25 | ZJ890100 | HEXAGONAL CAP NUT | M5 #3 EP-FE/CU-ZN | ナット ６角袋 | | | |

*: New Parts

RANK: Japan only

④ ARM ASSEMBLY L

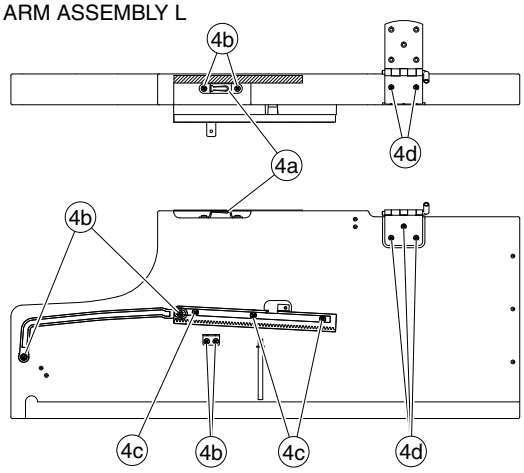


⑤ ARM ASSEMBLY R

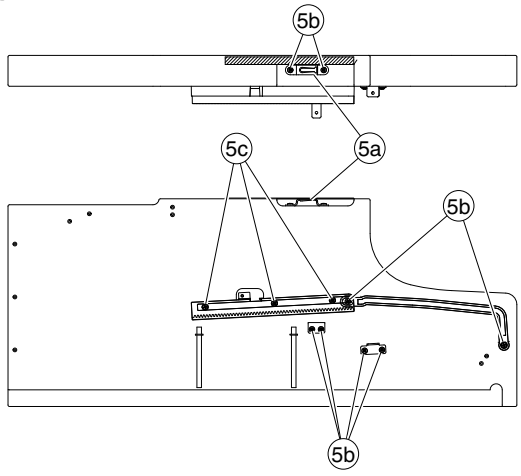


## ● CLP-565GP

| | REF NO. | PART NO. | DESCRIPTION | | 部品名 | REMARKS | QTY | RANK |
|---|---|---|---|---|---|---|---|---|
| * | 4 | **ZJ207500** | ARM ASSEMBLY L | LEFT | 腕木Ａｓｓ’ｙ Ｌ | CLP-565GP | | |
| | 4a | **WA21830R** | HOLDER, TOP BOARD | 1.20 | 屋根固定金具 | | | 01 |
| | 4b | **WE97070R** | BIND HEAD TAPPING SCREW-1 | 3.5X16 MFZN2W3 | ＴＰ＃１＋ＢＩＮＤ | | 6 | 01 |
| | 4c | **WE971500** | BIND HEAD TAPPING SCREW-1 | 3.5X20 MFZN2W3 | ＴＰ＃１＋ＢＩＮＤ | | 3 | |
| | 4d | **ZA850300** | OVAL HEAD TAPPING SCREW-1 | 3.0X14 MFNI | ＋丸皿ＴＰ １種 | | 5 | 01 |
| * | 5 | **ZJ207700** | ARM ASSEMBLY R | RIGHT | 腕木Ａｓｓ’ｙ Ｒ | CLP-565GP | | |
| | 5a | **WA21830R** | HOLDER, TOP BOARD | 1.20 | 屋根固定金具 | | | 01 |
| | 5b | **WE97070R** | BIND HEAD TAPPING SCREW-1 | 3.5X16 MFZN2W3 | ＴＰ＃１＋ＢＩＮＤ | | 8 | 01 |
| | 5c | **WE971500** | BIND HEAD TAPPING SCREW-1 | 3.5X20 MFZN2W3 | ＴＰ＃１＋ＢＩＮＤ | | 3 | |

✻: New Parts RANK: Japan only

## ● CLP-565GPWH

| | REF NO. | PART NO. | DESCRIPTION | | 部品名 | REMARKS | QTY | RANK |
|---|---|---|---|---|---|---|---|---|
| * | 4 | **ZJ207600** | ARM ASSEMBLY L | LEFT | 腕木Ａｓｓ’ｙ Ｌ | CLP-565GPWH | | |
| | 4a | **WA21830R** | HOLDER, TOP BOARD | 1.20 | 屋根固定金具 | | | 01 |
| | 4b | **WE97070R** | BIND HEAD TAPPING SCREW-1 | 3.5X16 MFZN2W3 | ＴＰ＃１＋ＢＩＮＤ | | 6 | 01 |
| | 4c | **WE971500** | BIND HEAD TAPPING SCREW-1 | 3.5X20 MFZN2W3 | ＴＰ＃１＋ＢＩＮＤ | | 3 | |
| | 4d | **V629510R** | OVAL HEAD TAPPING SCREW-1 | 3.0X14 BS | ＋丸皿ＴＰ １種 | | 5 | 01 |
| * | 5 | **ZJ207800** | ARM ASSEMBLY R | RIGHT | 腕木Ａｓｓ’ｙ Ｒ | CLP-565GPWH | | |
| | 5a | **WA21830R** | HOLDER, TOP BOARD | 1.20 | 屋根固定金具 | | | 01 |
| | 5b | **WE97070R** | BIND HEAD TAPPING SCREW-1 | 3.5X16 MFZN2W3 | ＴＰ＃１＋ＢＩＮＤ | | 8 | 01 |
| | 5c | **WE971500** | BIND HEAD TAPPING SCREW-1 | 3.5X20 MFZN2W3 | ＴＰ＃１＋ＢＩＮＤ | | 3 | |

✻: New Parts RANK: Japan only

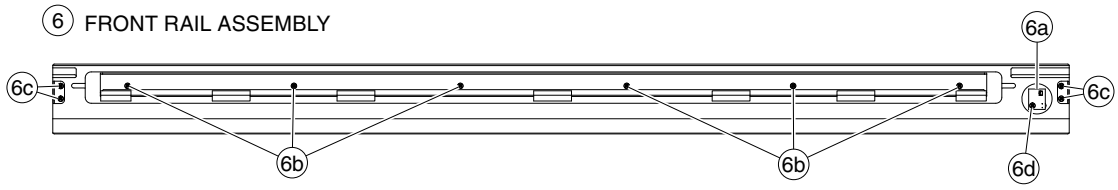


| | REF NO. | PART NO. | DESCRIPTION | | 部品名 | REMARKS | QTY | RANK |
|---|---|---|---|---|---|---|---|---|
| * | 6 | **ZJ207900** | FRONT RAIL ASSEMBLY | | 口棒Ass'y | CLP-565GP | | |
| * | 6 | **ZJ208000** | FRONT RAIL ASSEMBLY | | 口棒Ass'y | CLP-565GPWH | | |
| | 6a | **--** | CIRCUIT BOARD | PL | PLシート | (ZJ08790) | | |
| | 6b | **WF831100** | BIND HEAD TAPPING SCREW-1 | 3.5X11 MFZN2W3 | TP#1+BIND | | 6 | 01 |
| | 6c | **WE97070R** | BIND HEAD TAPPING SCREW-1 | 3.5X16 MFZN2W3 | TP#1+BIND | | 4 | 01 |
| | 6d | **WE971300** | BIND HEAD TAPPING SCREW-1 | 3.5X10 MFZN2B3 | TP#1+BIND | | | |

*: New Parts

RANK: Japan only

# ■ PEDAL BOX ASSEMBLY

**<Top view>**

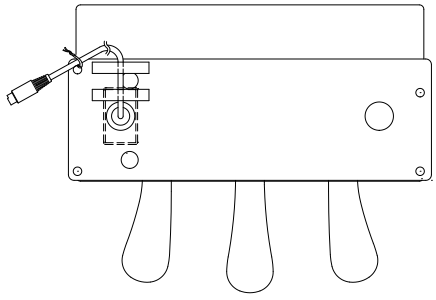

**<Side view>**

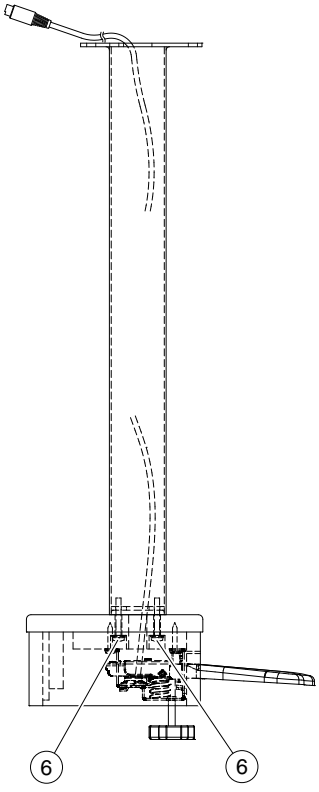


**<Front view>**

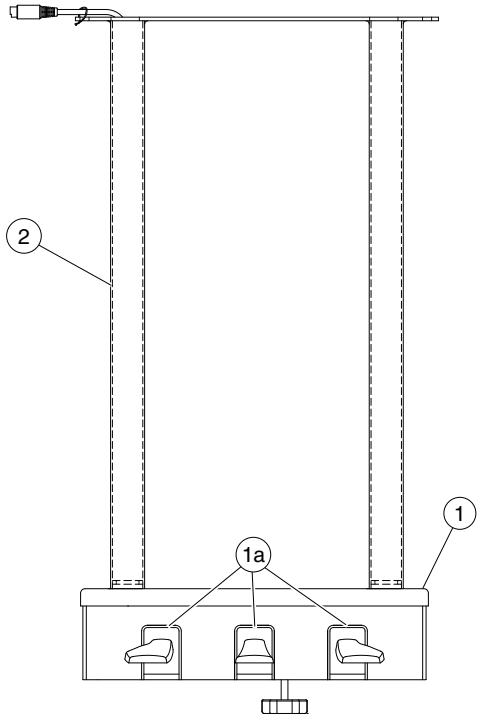


**<Bottom view>**

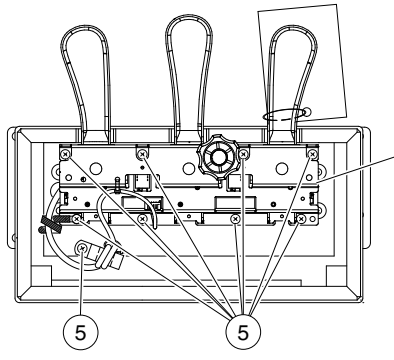


3 PEDAL ASSEMBLY:
See page 16.

## ● CLP-565GP

| | REF NO. | PART NO. | DESCRIPTION | | 部品名 | REMARKS | QTY | RANK |
|---|---|---|---|---|---|---|---|---|
| | | | PEDAL BOX ASSEMBLY | | ペダルＢＯＸＡｓｓ’ｙ | CLP-565GP | | |
| | | -- | PEDAL BOX ASSEMBLY | | ペダルＢＯＸＡｓｓ’ｙ | (ZJ19860) | | |
| * | 1 | **ZJ203100** | PEDAL BOX SUB ASSEMBLY | | ペダルＢＯＸ集成 | | | |
| | 1a | **ZF579600** | FELT | | フェルト | | 3 | 01 |
| | 2 | **WC367701** | PEDAL SUPPORT | | ペダル柱塗装品 | | | 20 |
| * | 3 | **ZJ199200** | PEDAL ASSEMBLY (S) | | ペダルＡｓｓ’ｙ（Ｓ） | | | |
| | 5 | **WF744100** | BIND HEAD TAPPING SCREW-1 | 4.0X25 MFZN2W3 | ＴＰ＃１＋ＢＩＮＤ | | 9 | 01 |
| | 6 | **WH500800** | BIND HEAD SCREW | SP 5.0X35 MFZN2W3 | 小ネジ＋ＢＩＮＤ | | 4 | 01 |

✻: New Parts

RANK: Japan only

## ● CLP-565GPWH

| | REF NO. | PART NO. | DESCRIPTION | | 部品名 | REMARKS | QTY | RANK |
|---|---|---|---|---|---|---|---|---|
| | | | PEDAL BOX ASSEMBLY | | Ｐボックスアｓｓ’ｙ | CLP-565GPWH | | |
| | | -- | PEDAL BOX ASSEMBLY | | Ｐボックスアｓｓ’ｙ | (ZJ92680) | | |
| | 1 | **ZF568600** | PEDAL BOX SUB ASSEMBLY | | Ｐボックス集成 | | | 10 |
| | 1a | **ZF579600** | FELT | | フェルト | | 3 | 01 |
| * | 2 | **ZJ897500** | PEDAL SUPPORT | | ペダル柱塗装品 | | | |
| | 3 | **WR041900** | PEDAL ASSEMBLY (D) | | ペダルＡｓｓ’ｙ（Ｄ） | | | 17 |
| | 5 | **WF744100** | BIND HEAD TAPPING SCREW-1 | 4.0X25 MFZN2W3 | ＴＰ＃１＋ＢＩＮＤ | | 9 | 01 |
| | 6 | **WH500800** | BIND HEAD SCREW | SP 5.0X35 MFZN2W3 | 小ネジ＋ＢＩＮＤ | | 4 | 01 |

✻: New Parts

RANK: Japan only

# ■ PEDAL ASSEMBLY

**<Top view>**

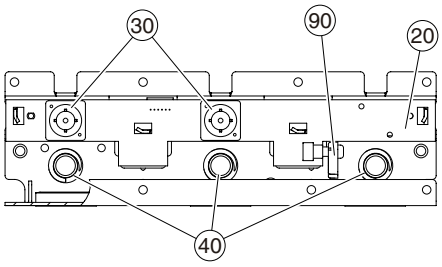


**<Bottom view>**

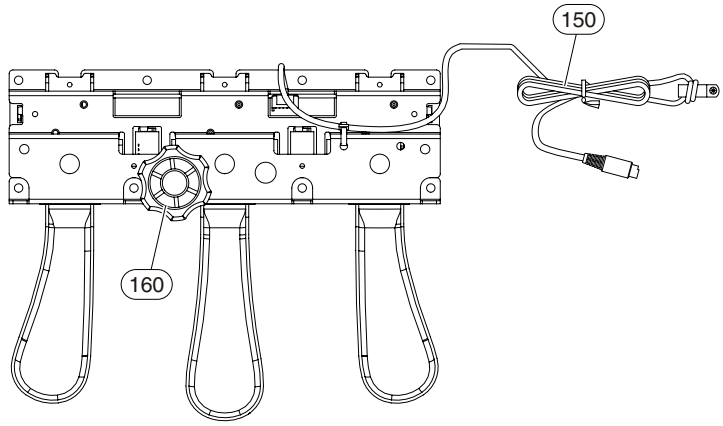


**<Top view>**

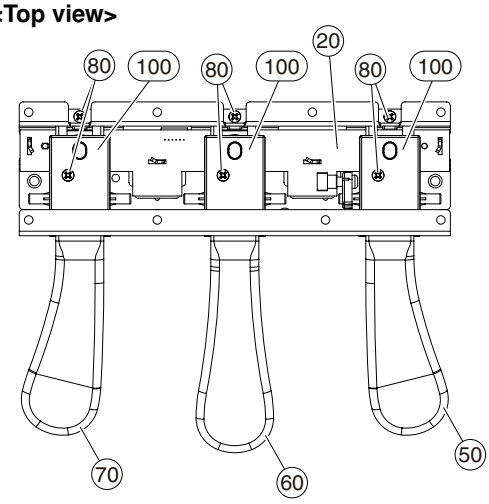


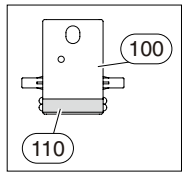


**<Front view>**

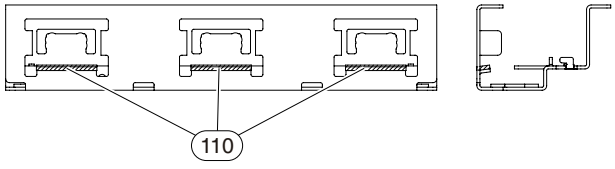

## ● CLP-565GP

| REF NO. | PART NO. | DESCRIPTION | | 部品名 | REMARKS | QTY | RANK |
|---|---|---|---|---|---|---|---|
| | | PEDAL ASSEMBLY (S) | | ペダルＡｓｓ’ｙ（Ｓ） | CLP-565GP | | |
| * | **ZJ199200** | PEDAL ASSEMBLY (S) | | ペダルＡｓｓ’ｙ（Ｓ） | | | |
| 20 | **WP029200** | CIRCUIT BOARD | PEDAL | ＰＥＤＡＬシート | | | 05 |
| 30 | **VU456001** | RUBBER CONTACT | PEDAL | 接点ゴムドーム | | 2 | |
| 40 | **WP015700** | PEDAL SPRING | | ペダルばね | | 3 | 01 |
| 50 | **WU426700** | PEDAL SET (R) | RIGHT | ペダルセット（Ｒ） | DAMPER pedal | | 06 |
| 60 | **WU426600** | PEDAL SET (C) | CENTER | ペダルセット（Ｃ） | SOSTENUTO pedal | | 06 |
| 70 | **WU426800** | PEDAL SET (L) | LEFT | ペダルセット（Ｌ） | SOFT pedal | | 06 |
| 80 | **WE774300** | BIND HEAD TAPPING SCREW-B | 3.0X8 MFZN2W3 | Ｂタイト＋ＢＩＮＤ | | 6 | |
| 90 | **WP016100** | ACTUATOR PEDAL BLACK | | アクチュエータペダル | | | 03 |
| 100 | **WP016200** | PEDAL GUIDE BLACK | | ペダルガイド | | 3 | 05 |
| 110 | **WP016301** | PEDAL FELT | | ペダルフェルト | | 6 | 01 |
| 150 | **V956050R** | PK-LF CABLE | | ＰＫ－ＬＦケーブル | | | 07 |
| 160 | **WF05450R** | CUSTOM DESIGNED SCREW | 40XM6X46 ADJUSTER | アジャスター | | | 03 |

✻: New Parts

RANK: Japan only

## ● CLP-565GPWH

| REF NO. | PART NO. | DESCRIPTION | | 部品名 | REMARKS | QTY | RANK |
|---|---|---|---|---|---|---|---|
| | | PEDAL ASSEMBLY (D) | | ペダルＡｓｓ’ｙ（Ｄ） | CLP-565GPWH | | |
| | **WR041900** | PEDAL ASSEMBLY (D) | | ペダルＡｓｓ’ｙ（Ｄ） | | | 17 |
| 20 | **WP029200** | CIRCUIT BOARD | PEDAL | ＰＥＤＡＬシート | | | 05 |
| 30 | **VU456001** | RUBBER CONTACT | PEDAL | 接点ゴムドーム | | 2 | |
| 40 | **WP015700** | PEDAL SPRING | | ペダルばね | | 3 | 01 |
| 50 | **WR038800** | PEDAL SET (R) | RIGHT | ペダルセット（Ｒ） | DAMPER pedal | | 06 |
| 60 | **WR038600** | PEDAL SET (C) | CENTER | ペダルセット（Ｃ） | SOSTENUTO pedal | | 07 |
| 70 | **WR038700** | PEDAL SET (L) | LEFT | ペダルセット（Ｌ） | SOFT pedal | | 06 |
| 80 | **WE774300** | BIND HEAD TAPPING SCREW-B | 3.0X8 MFZN2W3 | Ｂタイト＋ＢＩＮＤ | | 6 | |
| 90 | **WP016100** | ACTUATOR PEDAL BLACK | | アクチュエータペダル | | | 03 |
| 100 | **WP016200** | PEDAL GUIDE BLACK | | ペダルガイド | | 3 | 05 |
| 110 | **WP016301** | PEDAL FELT | | ペダルフェルト | | 6 | 01 |
| 150 | **V956050R** | PK-LF CABLE | | ＰＫ－ＬＦケーブル | | | 07 |
| 160 | **WF05450R** | CUSTOM DESIGNED SCREW | 40XM6X46 ADJUSTER | アジャスター | | | 03 |

✻: New Parts

RANK: Japan only

# ■ TOP BOARD S ASSEMBLY

**<Top view>**

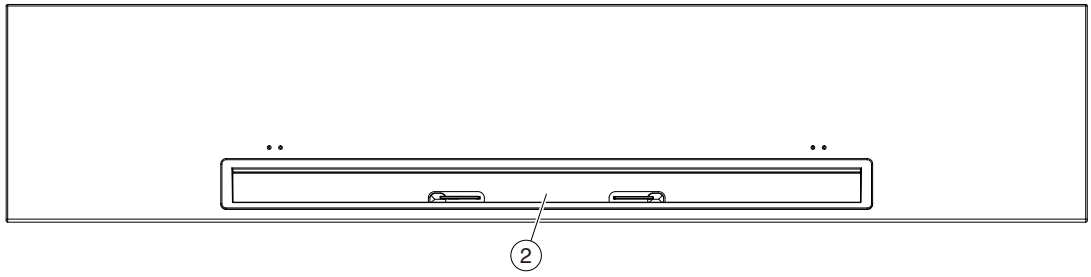


**<Front view>**

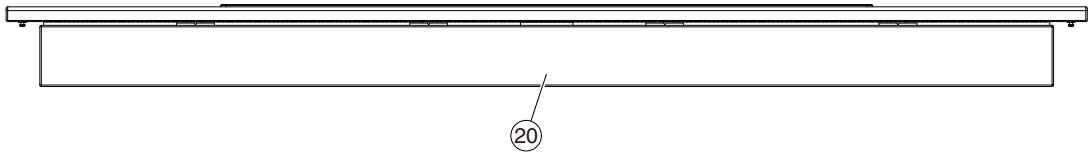


**<Bottom view>**

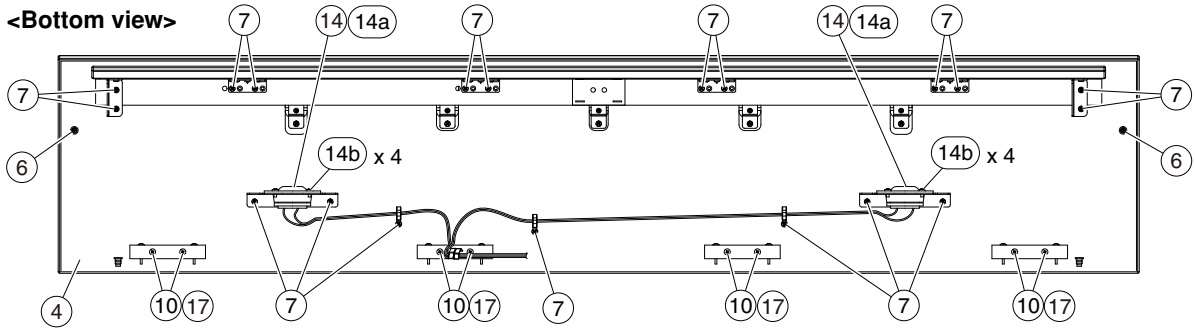


**<Rear view>**

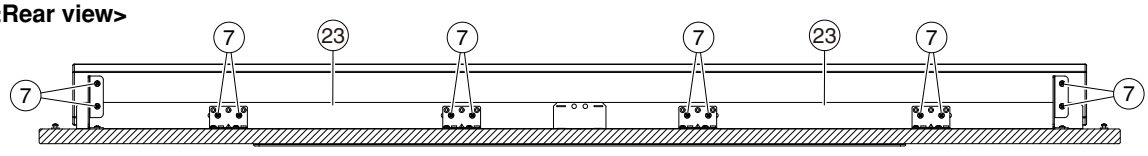

## ● CLP-565GP

| | REF NO. | PART NO. | DESCRIPTION | | 部品名 | REMARKS | QTY | RANK |
|---|---|---|---|---|---|---|---|---|
| | | | TOP BOARD S ASSEMBLY | SMALL | 屋根小Ａｓｓ’ｙ | CLP-565GP | | |
| | | -- | TOP BOARD S ASSEMBLY | SMALL | 屋根小Ａｓｓ’ｙ | (ZJ20710) | | |
| * | 1 | **ZJ213800** | TOP BOARD S | SMALL | 屋根小塗装品 | | | |
| | 2 | **ZC889200** | MUSIC STAND ASSEMBLY | | 譜面台Ａｓｓ’ｙ | | | 11 |
| | 2a | **WE774300** | BIND HEAD TAPPING SCREW-B | 3.0X8 MFZN2W3 | Ｂタイト＋ＢＩＮＤ | | 4 | |
| | 4 | -- | TOP BOARD BACK ASSEMBLY | | 屋根後板Ａｓｓ’ｙ | (ZJ21410) | | |
| | 6 | **ZF760800** | SHOULDER SCREW | | ショルダースクリュー | | 2 | |
| | 7 | **WF831100** | BIND HEAD TAPPING SCREW-1 | 3.5X11 MFZN2W3 | ＴＰ＃１＋ＢＩＮＤ | | 41 | 01 |
| | 8 | **WE774200** | BIND HEAD TAPPING SCREW-B | 3.0X10 MFZN2W3 | Ｂタイト＋ＢＩＮＤ | | 10 | 01 |
| | 10 | **WE97990R** | TRUSS HEAD TAPPING SCREW-1 | 3.5X30 MFZN2W3 | ＴＰ＃１＋ＴＲＵＳ | | 8 | 01 |
| | 14 | -- | SPEAKER ASSEMBLY | | スピーカＡｓｓ’ｙ | (WW49340) | 2 | |
| | 14a | **XL455A0R** | SPEAKER | 5.0 cm 16 ohm 60W | スピーカ | SQUAWKER | | 07 |
| | 14b | **WE962000** | BIND HEAD TAPPING SCREW-B | 4.0X8 MFZN2B3 | Ｂタイト＋ＢＩＮＤ | | 4 | 01 |
| | 17 | **WF57880R** | FLAT WASHER | 4.0X12X1.0 MFZN2W3 | 平座みがき丸 | | 8 | 01 |
| * | 20 | **ZJ214500** | TOP BOARD FRONT PANEL | | 屋根前板印刷品 | | | |
| | 23 | -- | NONWOVEN FABRIC CLOTH | GRILLE | グリル不織布 | (ZJ21500) | 2 | |

✻: New Parts RANK: Japan only

## ● CLP-565GPWH

| | REF NO. | PART NO. | DESCRIPTION | | 部品名 | REMARKS | QTY | RANK |
|---|---|---|---|---|---|---|---|---|
| | | | TOP BOARD S ASSEMBLY | SMALL | 屋根小Ａｓｓ’ｙ | CLP-565GPWH | | |
| | | -- | TOP BOARD S ASSEMBLY | SMALL | 屋根小Ａｓｓ’ｙ | (ZJ20720) | | |
| * | 1 | **ZJ213900** | TOP BOARD S | SMALL | 屋根小塗装品 | | | |
| | 2 | **ZF520800** | MUSIC STAND ASSEMBLY | | 譜面台Ａｓｓ’ｙ | | | 13 |
| | 2a | **WE774300** | BIND HEAD TAPPING SCREW-B | 3.0X8 MFZN2W3 | Ｂタイト＋ＢＩＮＤ | | 4 | |
| | 4 | -- | TOP BOARD BACK ASSEMBLY | | 屋根後板Ａｓｓ’ｙ | (ZJ21420) | | |
| | 6 | **ZF760800** | SHOULDER SCREW | | ショルダースクリュー | | 2 | |
| | 7 | **WF831100** | BIND HEAD TAPPING SCREW-1 | 3.5X11 MFZN2W3 | ＴＰ＃１＋ＢＩＮＤ | | 41 | 01 |
| | 8 | **WE774200** | BIND HEAD TAPPING SCREW-B | 3.0X10 MFZN2W3 | Ｂタイト＋ＢＩＮＤ | | 10 | 01 |
| | 10 | **WE97990R** | TRUSS HEAD TAPPING SCREW-1 | 3.5X30 MFZN2W3 | ＴＰ＃１＋ＴＲＵＳ | | 8 | 01 |
| | 14 | -- | SPEAKER ASSEMBLY | | スピーカＡｓｓ’ｙ | (WW49340) | 2 | |
| | 14a | **XL455A0R** | SPEAKER | 5.0 cm 16 ohm 60W | スピーカ | SQUAWKER | | 07 |
| | 14b | **WE962000** | BIND HEAD TAPPING SCREW-B | 4.0X8 MFZN2B3 | Ｂタイト＋ＢＩＮＤ | | 4 | 01 |
| | 17 | **WF57880R** | FLAT WASHER | 4.0X12X1.0 MFZN2W3 | 平座みがき丸 | | 8 | 01 |
| * | 20 | **ZJ214600** | TOP BOARD FRONT PANEL | | 屋根前板印刷品 | | | |
| | 23 | -- | NONWOVEN FABRIC CLOTH | GRILLE | グリル不織布 | (ZJ21500) | 2 | |

✻: New Parts RANK: Japan only

# ■ TOP BOARD L ASSEMBLY

<Front view>

<Bottom view>

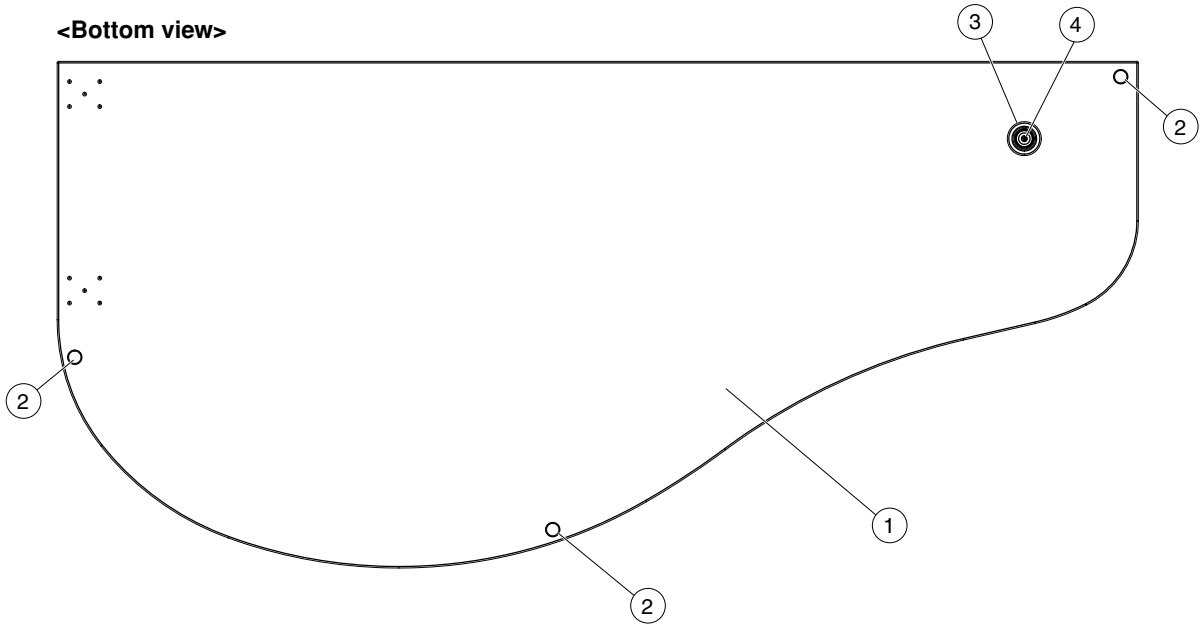


## ● CLP-565GP

| REF NO. | PART NO. | DESCRIPTION | | 部品名 | REMARKS | QTY | RANK |
|---|---|---|---|---|---|---|---|
| | | TOP BOARD L ASSEMBLY | LARGE | 屋根大Ａｓｓ’ｙ | CLP-565GP | | |
| * | **ZJ207300** | TOP BOARD L ASSEMBLY | LARGE | 屋根大Ａｓｓ’ｙ | | | |
| 1 | **--** | TOP BOARD L | LARGE | 屋根大塗装品 | (ZJ22090) | | |
| 2 | **VS440001** | PL RUBBER MOLD | SJ-5017 | ストッパー　Ａ | | 3 | 02 |
| 3 | **WK691100** | TOP BOARD SAUCER | | 屋根受け皿 | | | 03 |
| 4 | **WE963900** | FLAT HEAD TAPPING SCREW-1 | 3.5X16 MFZN2B3 | ＴＰ＃１十ＦＬＡＴ | | | 01 |

✻: New Parts　　RANK: Japan only

## ● CLP-565GPWH

| REF NO. | PART NO. | DESCRIPTION | | 部品名 | REMARKS | QTY | RANK |
|---|---|---|---|---|---|---|---|
| | | TOP BOARD L ASSEMBLY | LARGE | 屋根大Ａｓｓ’ｙ | CLP-565GPWH | | |
| * | **ZJ207400** | TOP BOARD L ASSEMBLY | LARGE | 屋根大Ａｓｓ’ｙ | | | |
| 1 | **--** | TOP BOARD L | LARGE | 屋根大塗装品 | (ZJ22100) | | |
| 2 | **Z2680200** | TOP BOARD RUBBER BUTTON WHITE | 10mm | 屋根クッションゴム釦 | | 3 | 03 |
| 3 | **ZF526800** | TOP BOARD SAUCER WHITE | | 屋根受け皿 | | | 03 |
| 4 | **WK277100** | FLAT HEAD TAPPING SCREW-1 | 3.5X16 MFZN2W3 | ＴＰ＃１十ＦＬＡＴ | | | 01 |

✻: New Parts　　RANK: Japan only

# ■ KEY BLOCK ASSEMBLY R

**<Bottom view>**

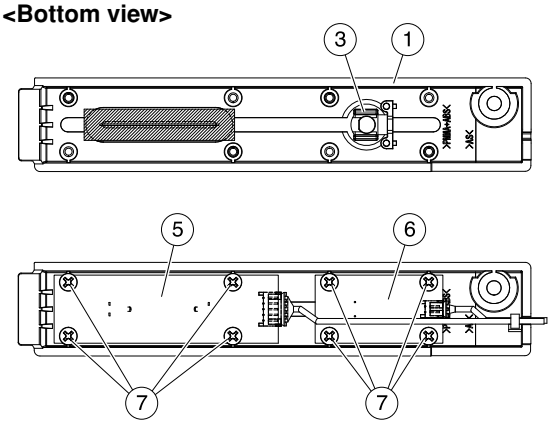


**<Top view>**

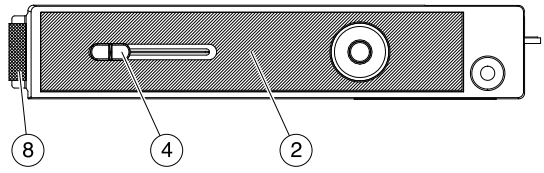


## ● CLP-565GP

| REF NO. | PART NO. | DESCRIPTION | | 部品名 | REMARKS | QTY | RANK |
|---|---|---|---|---|---|---|---|
| | | KEY BLOCK ASSEMBLY R | RIGHT | 拍子木Ａｓｓ’ｙ Ｒ | CLP-565GP | | |
| | -- | KEY BLOCK ASSEMBLY R | RIGHT | 拍子木Ａｓｓ’ｙ Ｒ | (ZH93060) | | |
| 1 | **ZH428800** | KEY BLOCK RB | RIGHT | 拍子木ＲＢ成形品 | | | |
| * 2 | **ZJ641700** | PANEL COVER R | RIGHT | パネルカバーＲ印刷品 | | | |
| 3 | **WM860400** | BUTTON (D) BLACK | x1 | ボタンＤ黒 | STANDBY/ON | | 01 |
| 4 | **WM919301** | KNOB (SLIDE) GRAY/BLACK | | ツマミ（スライド） | MASTER VOLUME | | 02 |
| 5 | **ZG462100** | CIRCUIT BOARD | VR | ＶＲシート | | | |
| 6 | **ZH423800** | CIRCUIT BOARD | PSW | ＰＳＷシート | | | |
| 7 | **WE774300** | BIND HEAD TAPPING SCREW-B | 3.0X8 MFZN2W3 | Ｂタイト＋ＢＩＮＤ | | 8 | |
| 8 | **WN159200** | FELT | 20X15 | フェルト | | | |

*: New Parts RANK: Japan only

## ● CLP-565GPWH

| REF NO. | PART NO. | DESCRIPTION | | 部品名 | REMARKS | QTY | RANK |
|---|---|---|---|---|---|---|---|
| | | KEY BLOCK ASSEMBLY R | RIGHT | 拍子木Ａｓｓ’ｙ Ｒ | CLP-565GPWH | | |
| | -- | KEY BLOCK ASSEMBLY R | RIGHT | 拍子木Ａｓｓ’ｙ Ｒ | (ZH42580) | | |
| * 1 | **ZH428900** | KEY BLOCK RB | RIGHT | 拍子木ＲＢ成形品 | | | |
| * 2 | **ZH429100** | PANEL COVER R | RIGHT | パネルカバーＲ印刷品 | | | |
| * 3 | **ZJ752400** | BUTTON (D) WHITE | x1 | ボタンＤホワイト | STANDBY/ON | | |
| 4 | **ZJ765700** | KNOB (SLIDE) LIGHT GRAY/WHITE | | ツマミ（スライド） | MASTER VOLUME | | |
| 5 | **ZG462100** | CIRCUIT BOARD | VR | ＶＲシート | | | |
| 6 | **ZH423800** | CIRCUIT BOARD | PSW | ＰＳＷシート | | | |
| 7 | **WE774300** | BIND HEAD TAPPING SCREW-B | 3.0X8 MFZN2W3 | Ｂタイト＋ＢＩＮＤ | | 8 | |
| 8 | **WN159200** | FELT | 20X15 | フェルト | | | |

*: New Parts RANK: Japan only

# ■ KEY BLOCK ASSEMBLY L

**<Bottom view >**

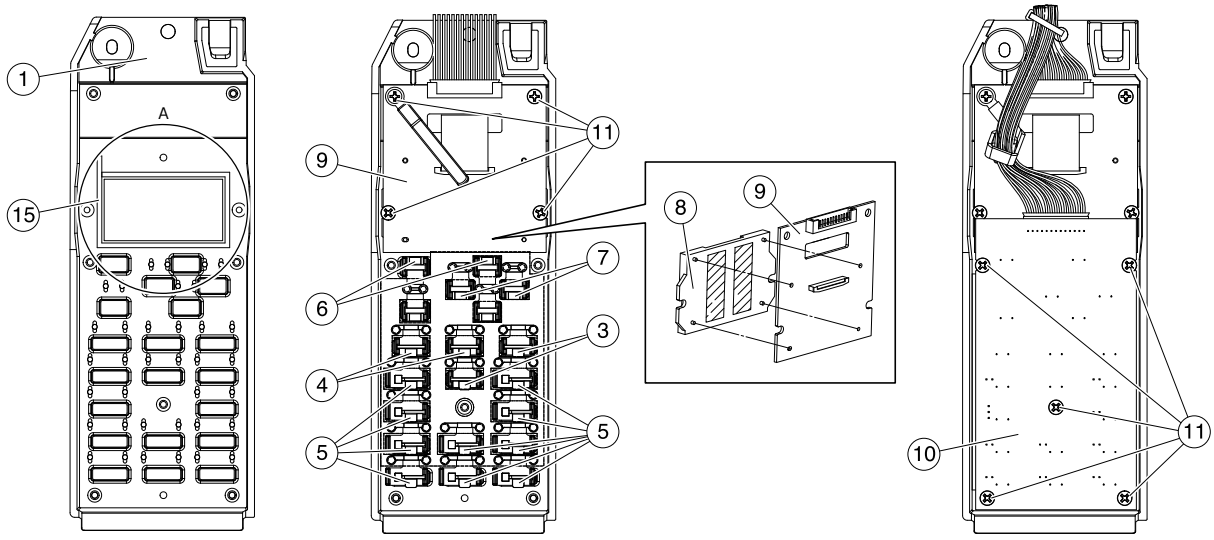


**Detail A**

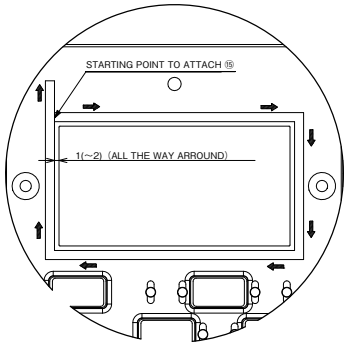


**<Top view >**

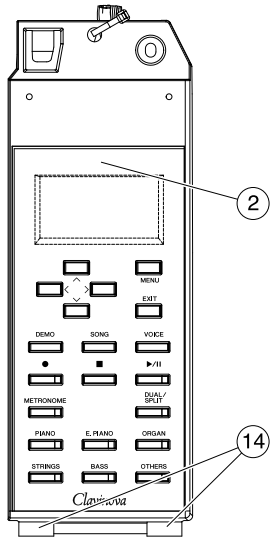

## ● CLP-565GP

| REF NO. | PART NO. | DESCRIPTION | | 部品名 | REMARKS | QTY | RANK |
|---|---|---|---|---|---|---|---|
| | | KEY BLOCK ASSEMBLY L | LEFT | 拍子木Ａｓｓ’ｙ Ｌ | CLP-565GP | | |
| | -- | KEY BLOCK ASSEMBLY L | LEFT | 拍子木Ａｓｓ’ｙ Ｌ | (ZH92570) | | |
| 1 | **ZH201100** | KEY BLOCK L | LEFT | 拍子木Ｌ成形品 | | | |
| 2 | **ZH201400** | PANEL COVER L | LEFT | パネルカバーＬ印刷品 | | | |
| 3 | **ZH209400** | BUTTON A BLACK | | ボタン Ａ | DEMO,STOP | 2 | |
| 4 | **ZJ061500** | BUTTON A DARK GRAY | | ボタン Ａ | SONG VOICE | 2 | |
| 5 | **ZH210800** | BUTTON A WITH LENS BLACK | | ボタンＡレンズ付 | REC,PLAY/PAUSE,DUAL/SPLIT<br>METRONOME,PIANO,E.PIANO<br>ORGAN,STRINGS,BASS,OTHERS | 10 | |
| 6 | **ZH212100** | BUTTON B BLACK | | ボタン Ｂ | UP,DOWN,MENU,EXIT | 2 | |
| 7 | **ZH212600** | BUTTON C BLACK | | ボタン Ｃ | LEFT,RIGHT | 2 | |
| 8 | **ZH222000** | CRYSTAL DISPLAY | UMVH-8814MD-1F | ＬＣＤユニット | | | |
| 9 | **ZG425800** | CIRCUIT BOARD | LCD | ＬＣＤシート | | | |
| 10 | **ZG462000** | CIRCUIT BOARD | PNL | ＰＮＬシート | | | |
| 11 | **WE774300** | BIND HEAD TAPPING SCREW-B | 3.0X8 MFZN2W3 | Ｂタイト＋ＢＩＮＤ | | 9 | |
| 14 | **WN159200** | FELT | 20X15 | フェルト | | 2 | |
| 15 | **ZH561600** | CUSHION PE | 180X2XT1.0 | クッションＰＥ | | | |

✻: New Parts

RANK: Japan only

## ● CLP-565GPWH

| REF NO. | PART NO. | DESCRIPTION | | 部品名 | REMARKS | QTY | RANK |
|---|---|---|---|---|---|---|---|
| | | KEY BLOCK ASSEMBLY L | LEFT | 拍子木Ａｓｓ’ｙ Ｌ | CLP-565GPWH | | |
| | -- | KEY BLOCK ASSEMBLY L | LEFT | 拍子木Ａｓｓ’ｙ Ｌ | (ZH19700) | | |
| ✻ 1 | **ZH201200** | KEY BLOCK L | LEFT | 拍子木Ｌ成形品 | | | |
| ✻ 2 | **ZJ375500** | PANEL COVER L | LEFT | パネルカバーＬ印刷品 | | | |
| 3 | **ZH209600** | BUTTON A WHITE | | ボタン Ａ | DEMO,STOP | 2 | |
| 4 | **ZH209500** | BUTTON A LIGHT GRAY | | ボタン Ａ | SONG VOICE | 2 | |
| 5 | **ZH211000** | BUTTON A WITH LENS WHITE | | ボタンＡレンズ付 | REC,PLAY/PAUSE,DUAL/SPLIT<br>METRONOME,PIANO,E.PIANO<br>ORGAN,STRINGS,BASS,OTHERS | 10 | |
| 6 | **ZH212300** | BUTTON B WHITE | | ボタン Ｂ | UP,DOWN,MENU,EXIT | 2 | |
| 7 | **ZH212800** | BUTTON C WHITE | | ボタン Ｃ | LEFT,RIGHT | 2 | |
| 8 | **ZH222000** | CRYSTAL DISPLAY | UMVH-8814MD-1F | ＬＣＤユニット | | | |
| 9 | **ZG425800** | CIRCUIT BOARD | LCD | ＬＣＤシート | | | |
| 10 | **ZG462000** | CIRCUIT BOARD | PNL | ＰＮＬシート | | | |
| 11 | **WE774300** | BIND HEAD TAPPING SCREW-B | 3.0X8 MFZN2W3 | Ｂタイト＋ＢＩＮＤ | | 9 | |
| 14 | **WN159200** | FELT | 20X15 | フェルト | | 2 | |
| 15 | **ZH561600** | CUSHION PE | 180X2XT1.0 | クッションＰＥ | | | |

✻: New Parts

RANK: Japan only

# ■ KEY COVER ASSEMBLY

**<Front view>**

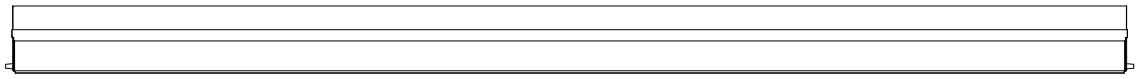

**<Bottom view>**

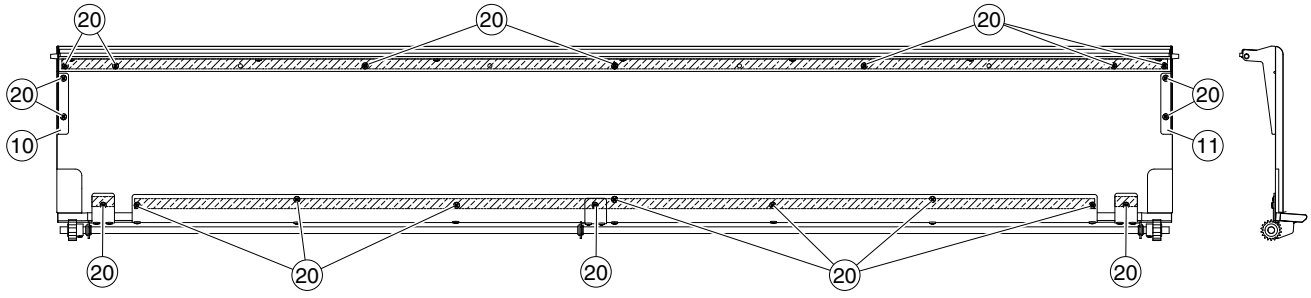


**<Rear view>**

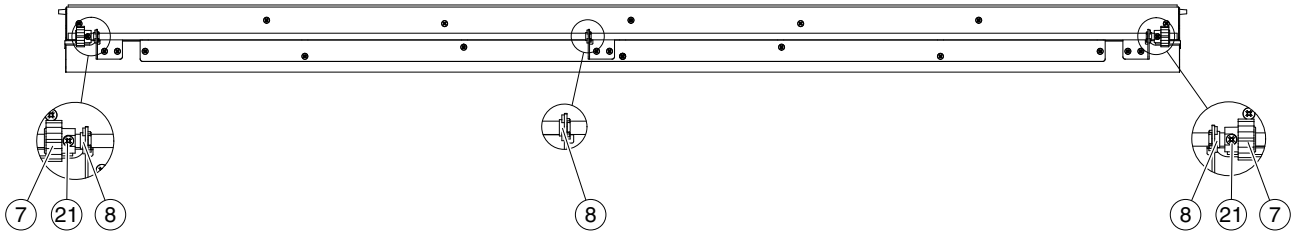


## ● CLP-565GP

| | REF NO. | PART NO. | DESCRIPTION | | 部品名 | REMARKS | QTY | RANK |
|---|---|---|---|---|---|---|---|---|
| | | | KEY COVER ASSEMBLY | | スライド蓋Ａｓｓ’ｙ | CLP-565GP | | |
| * | | **ZK758000** | KEY COVER ASSEMBLY | | スライド蓋Ａｓｓ’ｙ | | | |
| | 7 | **V985790R** | SLIDE COVER GEAR | M90S | ピニオンギヤ | | 2 | 01 |
| | 8 | **VS368501** | BUSH BLACK | | ブッシュ | | 3 | 01 |
| | 10 | **WV580700** | SASH COVER (L) | LEFT | サッシカバー（Ｌ） | | | 01 |
| | 11 | **WV580800** | SASH COVER (R) | RIGHT | サッシカバー（Ｒ） | | | 01 |
| | 20 | **WF74530R** | BIND HEAD TAPPING SCREW-1 | 3.5X8 MFZN2W3 | ＴＰ＃１＋ＢＩＮＤ | | 21 | 01 |
| | 21 | **WE95290R** | BIND HEAD SCREW | 3.0X10 MFZN2W3 | 小ネジ＋ＢＩＮＤ | | 2 | 01 |

✻: New Parts RANK: Japan only

## ● CLP-565GPWH

| | REF NO. | PART NO. | DESCRIPTION | | 部品名 | REMARKS | QTY | RANK |
|---|---|---|---|---|---|---|---|---|
| | | | KEY COVER ASSEMBLY | | スライド蓋Ａｓｓ’ｙ | CLP-565GPWH | | |
| * | | **ZJ208600** | KEY COVER ASSEMBLY | | スライド蓋Ａｓｓ’ｙ | | | |
| | 7 | **V985790R** | SLIDE COVER GEAR | M90S | ピニオンギヤ | | 2 | 01 |
| | 8 | **VS368501** | BUSH BLACK | | ブッシュ | | 3 | 01 |
| | 10 | **WZ304400** | SASH COVER (L) | LEFT | サッシカバー（Ｌ） | | | 03 |
| | 11 | **WZ304500** | SASH COVER (R) | RIGHT | サッシカバー（Ｒ） | | | 03 |
| | 20 | **WF74530R** | BIND HEAD TAPPING SCREW-1 | 3.5X8 MFZN2W3 | ＴＰ＃１＋ＢＩＮＤ | | 21 | 01 |
| | 21 | **WE95290R** | BIND HEAD SCREW | 3.0X10 MFZN2W3 | 小ネジ＋ＢＩＮＤ | | 2 | 01 |

✻: New Parts RANK: Japan only

# ■ JACK ASSEMBLY

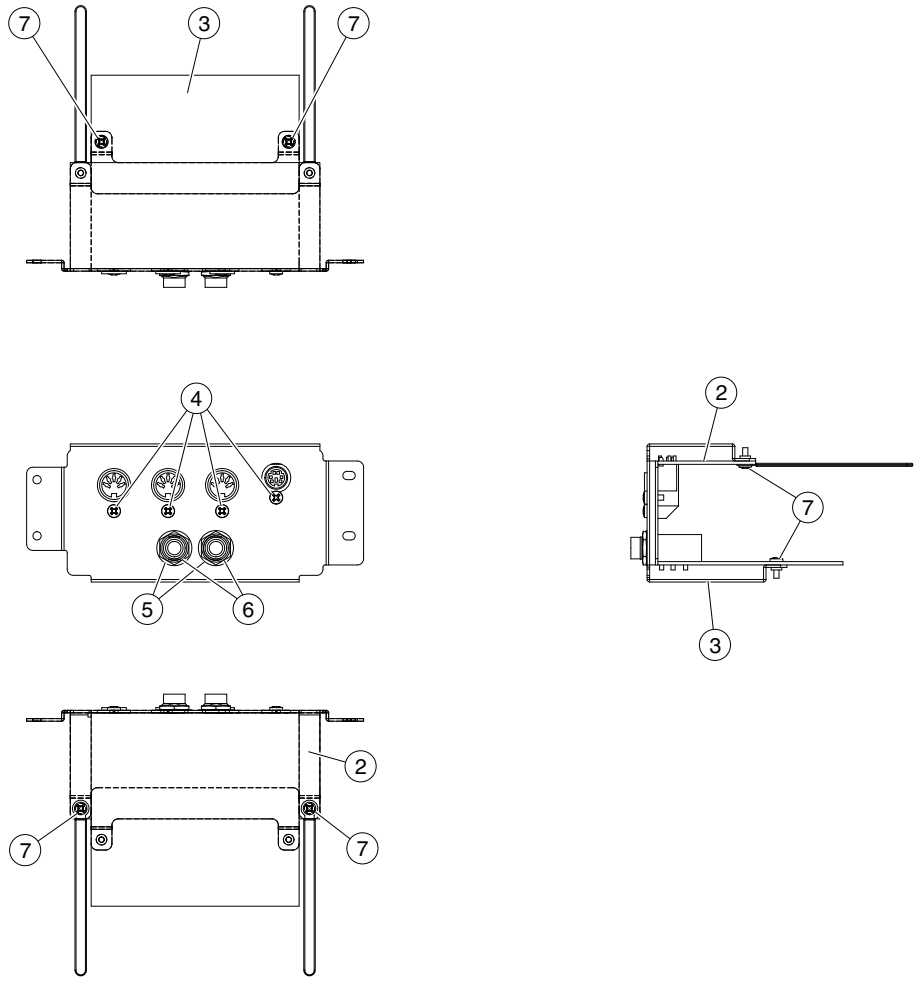


| REF NO. | PART NO. | DESCRIPTION | | 部品名 | REMARKS | QTY | RANK |
|---|---|---|---|---|---|---|---|
| | | JACK ASSEMBLY | | ジャックAss'y | CLP-565GP/CLP-565GPWH | | |
| | **ZH431200** | JACK ASSEMBLY | | ジャックAss'y | | | |
| 2 | **--** | CIRCUIT BOARD | DJK | DJKシート | (ZG71730) | | |
| 3 | **--** | CIRCUIT BOARD | AJK | AJKシート | (ZG71740) | | |
| 4 | **WE774400** | BIND HEAD TAPPING SCREW-B | 3.0X8 MFZN2B3 | Bタイト＋BIND | | 4 | |
| 5 | **VJ86940R** | WASHER BLACK | | ワッシャー | | 2 | 02 |
| 6 | **WF55990R** | HEXAGONAL NUT | M12.0X14X2 P=1.0 | ナット特殊 | | 2 | 01 |
| 7 | **WE774300** | BIND HEAD TAPPING SCREW-B | 3.0X8 MFZN2W3 | Bタイト＋BIND | | 4 | |

✻: New Parts

RANK: Japan only

# ■ HP/USB ASSEMBLY

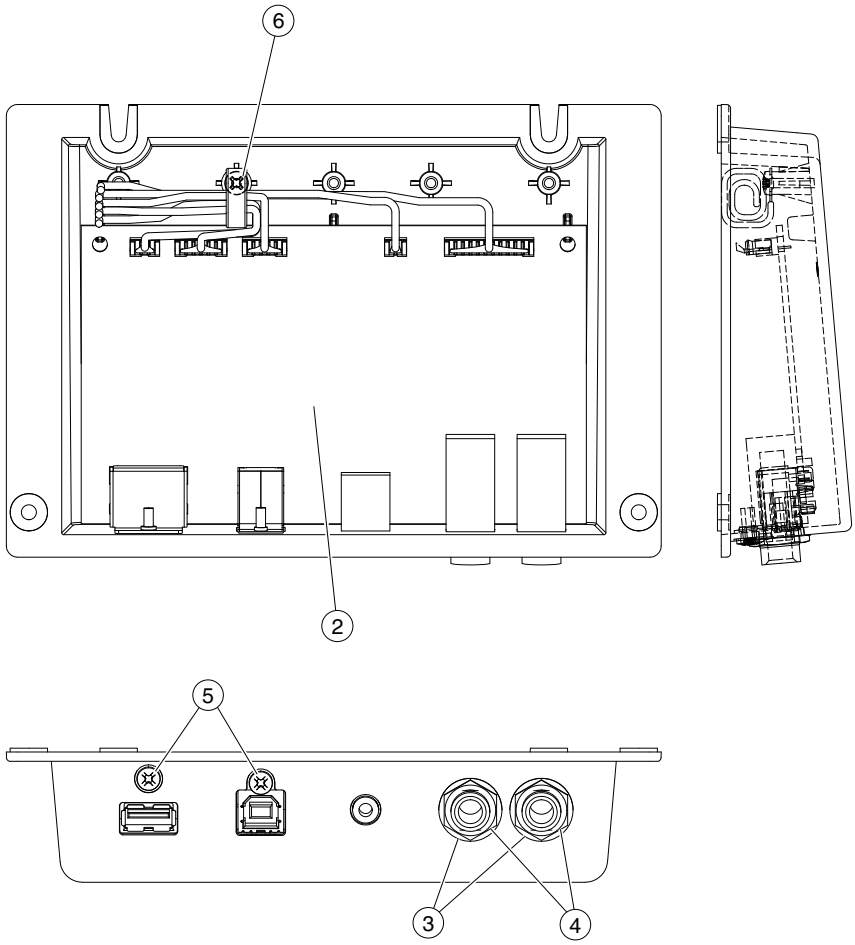


| | REF NO. | PART NO. | DESCRIPTION | | 部品名 | REMARKS | QTY | RANK |
|---|---|---|---|---|---|---|---|---|
| | | | HP/USB ASSEMBLY | | ＨＰ／ＵＳＢ Ａｓｓ’ｙ | CLP-565GP/CLP-565GPWH | | |
| * | | **ZK549600** | HP/USB ASSEMBLY | | ＨＰ／ＵＳＢ Ａｓｓ’ｙ | | | |
| | 2 | **--** | CIRCUIT BOARD | JK | Ｊ Ｋ シ ー ト | (ZG71760) | | |
| | 3 | **VJ86940R** | WASHER BLACK | | ワ ッ シ ャ ー | | 2 | 02 |
| | 4 | **WF55990R** | HEXAGONAL NUT | M12.0X14X2 P=1.0 | ナ ッ ト 特 殊 | | 2 | 01 |
| | 5 | **WE983600** | BIND HEAD SCREW | 3.0X8 MFZN2B3 | 小ネジ＋ＢＩＮＤ | | 2 | 01 |
| | 6 | **WE774300** | BIND HEAD TAPPING SCREW-B | 3.0X8 MFZN2W3 | Ｂタイト＋ＢＩＮＤ | | | |

*: New Parts

RANK: Japan only

# ■ BENCH (BC-108PE/BC-108WH)

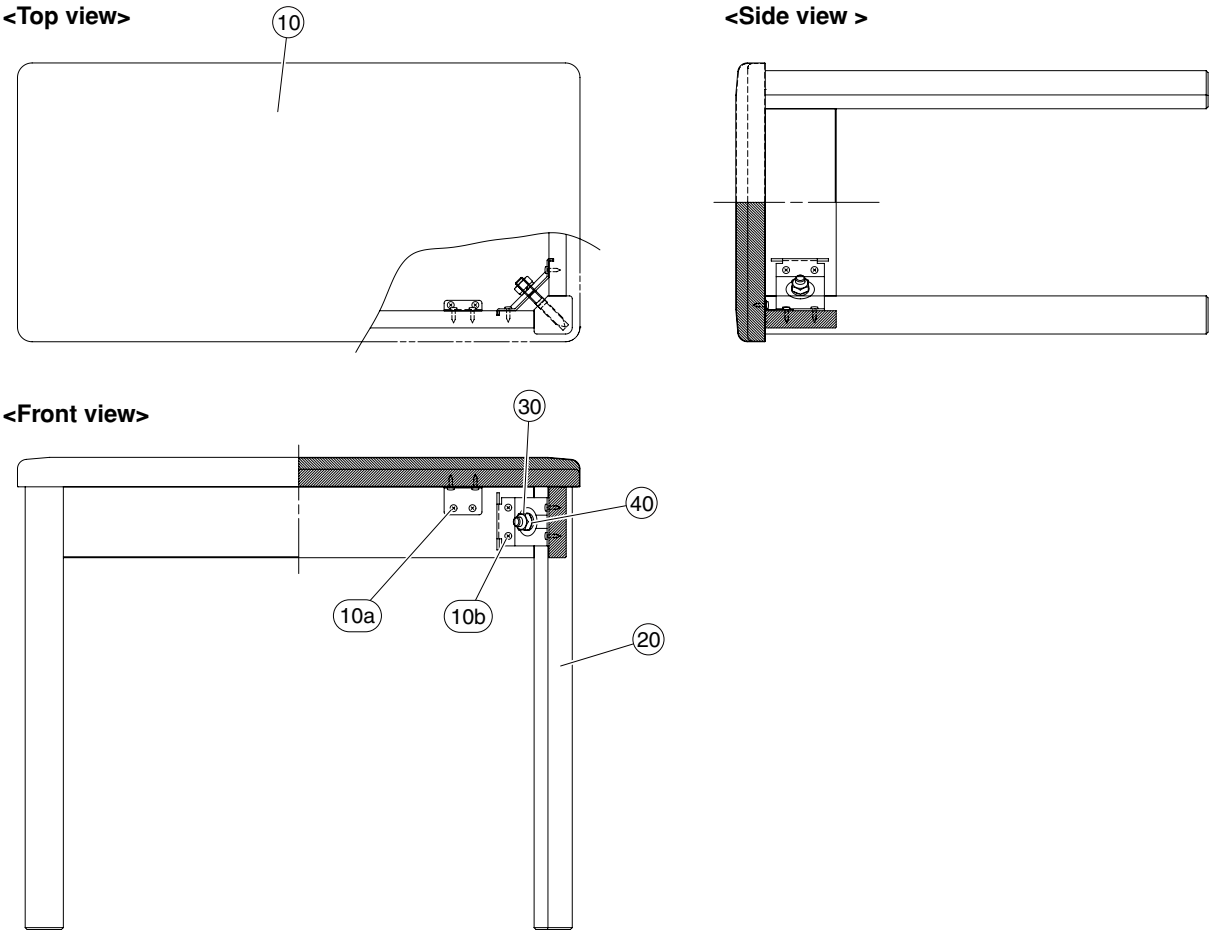


## ● BC-108PE

| REF NO. | PART NO. | DESCRIPTION | | 部品名 | REMARKS | QTY | RANK |
|---|---|---|---|---|---|---|---|
| | | BENCH | BC-108PE | 同梱品セット椅子 | CLP-565GP | | |
| | -- | BENCH | BC-108PE | 同梱品セット椅子 | CLP-565GP U,I,Y,P (ZH47000) | | |
| A | -- | BENCH UNIT | BC-108PE | 椅子 | (ZH48300) | | |
| 10 | **WG479800** | BENCH BOARD ASSEMBLY | BC-108PE | 座板Ass'y | | | |
| 10a | **WE95460R** | BIND HEAD TAPPING SCREW-1 | 3.5X14 MFZN2W3 | TP#1十BIND | | 16 | 01 |
| 10b | **WE97070R** | BIND HEAD TAPPING SCREW-1 | 3.5X16 MFZN2W3 | TP#1十BIND | | 16 | 01 |
| 20 | **ZH531900** | LEG ASSEMBLY | BC-108PE | 脚柱Ass'y | | 4 | |
| 30 | **WF57760R** | SPRING WASHER | #2 10.0 MFZN2W3 | バネ座金 | | 4 | 01 |
| 40 | **WF74260R** | HEXAGONAL NUT | M10 #1 | ナット6角 | | 4 | 01 |
| | | | | | | | |
| | | ACCESSORY | | 付属品 | | | |
| | -- | WRENCH | | ベンチスパナ | (V688680) | | |

✻: New Parts RANK: Japan only

## ● BC-108WH

| REF NO. | PART NO. | DESCRIPTION | | 部品名 | REMARKS | QTY | RANK |
|---|---|---|---|---|---|---|---|
| | | BENCH | BC-108WH | 同梱品セット椅子 | CLP-565GPWH | | |
| | -- | BENCH | BC-108WH | 同梱品セット椅子 | CLP-565GPWH I,Y,P (ZH46990) | | |
| A | -- | BENCH UNIT | BC-108WH | 椅子 | (ZH48290) | | |
| 10 | **ZC904900** | SEAT ASSEMBLY | BC-108WH | 座板Ass'y | | | 13 |
| 10a | **WE95460R** | BIND HEAD TAPPING SCREW-1 | 3.5X14 MFZN2W3 | TP#1十BIND | | 16 | 01 |
| 10b | **WE97070R** | BIND HEAD TAPPING SCREW-1 | 3.5X16 MFZN2W3 | TP#1十BIND | | 16 | 01 |
| 20 | **ZH531800** | LEG ASSEMBLY | BC-108WH | 脚柱Ass'y | | 4 | |
| 30 | **WF57760R** | SPRING WASHER | #2 10.0 MFZN2W3 | バネ座金 | | 4 | 01 |
| 40 | **WF74260R** | HEXAGONAL NUT | M10 #1 | ナット6角 | | 4 | 01 |
| | | | | | | | |
| | | ACCESSORY | | 付属品 | | | |
| | -- | WRENCH | | ベンチスパナ | (V688680) | | |

✻: New Parts RANK: Japan only

# ■ KEYBOARD ASSEMBLY

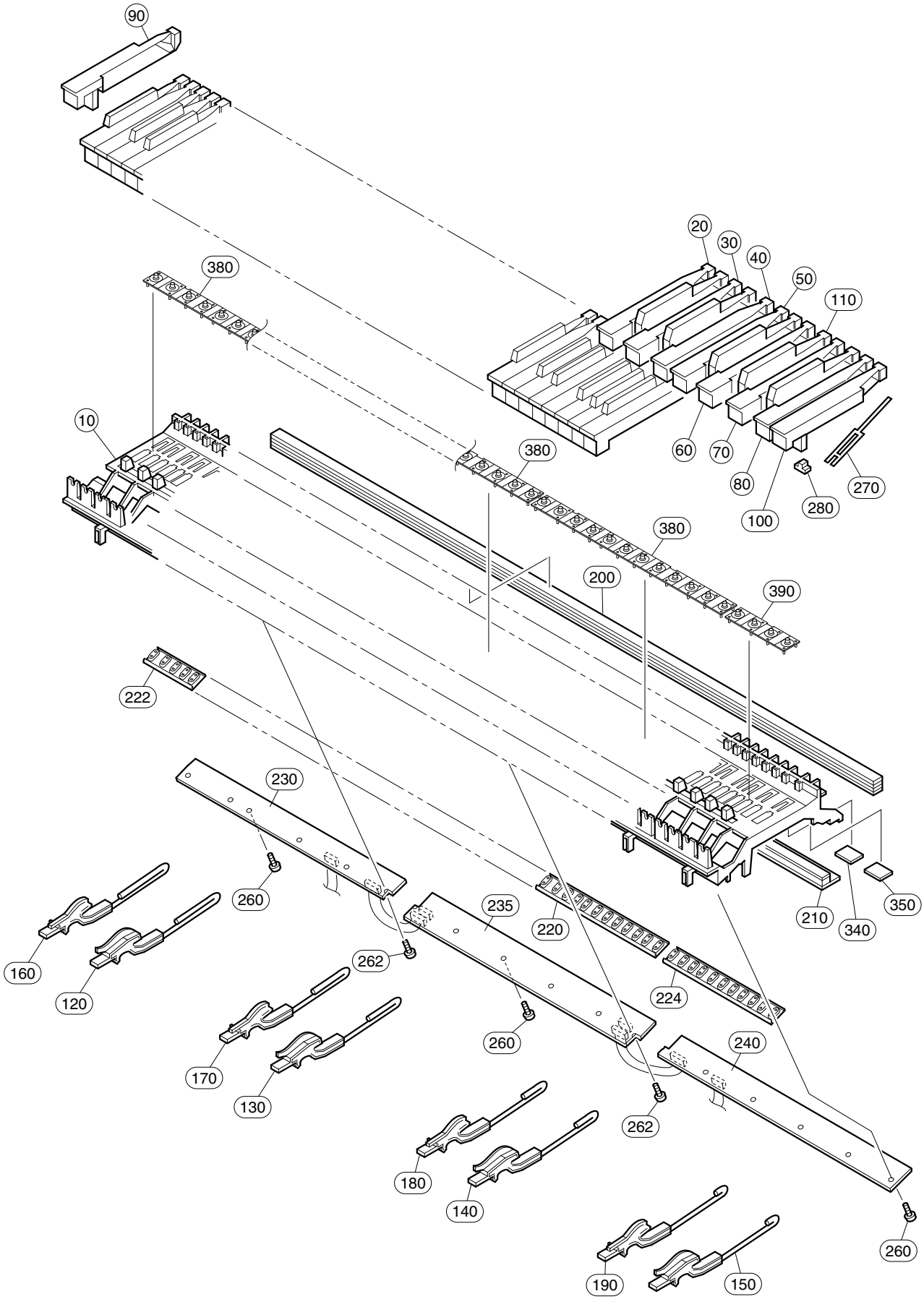

| REF NO. | PART NO. | DESCRIPTION | | 部品名 | REMARKS | QTY | RANK |
|---|---|---|---|---|---|---|---|
| | | GH3 GKS KEYBOARD ASSEMBLY | AI ONLY W KEY ESC | GH3 GKS鍵盤 | CLP-565GP/CLP-565GPWH | | |
| | **ZH197300** | GH3 GKS KEYBOARD ASSEMBLY | AI ONLY W KEY ESC | GH3 GKS鍵盤 | | | |
| 10 | **--** | KEYBOARD FRAME | | フレーム88アウトサート | (ZH19720) | | |
| 20 | **ZH194400** | WHITE KEY C | AI-ESC C | 白鍵C人工象牙 | | 7 | |
| 30 | **ZH194500** | WHITE KEY D | AI-ESC D | 白鍵D人工象牙 | | 7 | |
| 40 | **ZH194600** | WHITE KEY E | AI-ESC E | 白鍵E人工象牙 | | 7 | |
| 50 | **ZH194700** | WHITE KEY F | AI-ESC F | 白鍵F人工象牙 | | 7 | |
| 60 | **ZH194900** | WHITE KEY G | AI-ESC G | 白鍵G人工象牙 | | 7 | |
| 70 | **ZH195100** | WHITE KEY A | AI-ESC A | 白鍵A人工象牙 | | 7 | |
| 80 | **ZH195200** | WHITE KEY B | AI-ESC B | 白鍵B人工象牙 | | 8 | |
| 90 | **ZH195400** | WHITE KEY A' | AI-ESC A' | 白鍵A'人工象牙 | | | |
| 100 | **ZH195300** | WHITE KEY C' | AI-ESC C' | 白鍵C'人工象牙 | | | |
| 110 | **ZH195600** | BLACK KEY | AI-ESC | 黒鍵 | | 36 | |
| 120 | **VY82850R** | HAMMER ASSEMBLY, WHITE KEY | W1 A-1-F1 | ドーム用ハンマーW1 | | 13 | 05 |
| 130 | **VY82860R** | HAMMER ASSEMBLY, WHITE KEY | W2 G1-E3 | ドーム用ハンマーW2 | | 13 | 05 |
| 140 | **VY82870R** | HAMMER ASSEMBLY, WHITE KEY | W3 F3-D5 | ドーム用ハンマーW3 | | 13 | 05 |
| 150 | **VY82880R** | HAMMER ASSEMBLY, WHITE KEY | W4 E5-C7 | ドーム用ハンマーW4 | | 13 | 05 |
| 160 | **VY82890R** | HAMMER ASSEMBLY, BLACK KEY | B1 A#-1-F#1 | ドーム用ハンマーB1 | | 9 | 05 |
| 170 | **VY82900R** | HAMMER ASSEMBLY, BLACK KEY | B2 G#1-D#3 | ドーム用ハンマーB2 | | 9 | 05 |
| 180 | **VY82910R** | HAMMER ASSEMBLY, BLACK KEY | B3 F#3-C#5 | ドーム用ハンマーB3 | | 9 | 05 |
| 190 | **VY82920R** | HAMMER ASSEMBLY, BLACK KEY | B4 D#5-A#6 | ドーム用ハンマーB4 | | 9 | 05 |
| 200 | **V8468201** | STOPPER FELT | U88 S | ストッパーU88 S | | | 08 |
| 210 | **V7640100** | STOPPER FELT | 1239.5X28X10.1T L88 W | ストッパーL88 W | | | 07 |
| 220 | **V828660R** | RUBBER CONTACT | OCTAVE 12KEYS D-C# | シーソードームD－C# | | 6 | 05 |
| 222 | **V828680R** | RUBBER CONTACT | OCTAVE 5KEYS A-C# | シーソードームA－C# | | | 06 |
| 224 | **V828670R** | RUBBER CONTACT | OCTAVE 11KEYS D-C | シーソードームD－C | | | 06 |
| 230 | **WV760400** | CIRCUIT BOARD | MK-L | MK－Lシート | | | 11 |
| 235 | **WV760500** | CIRCUIT BOARD | MK-M | MK－Mシート | | | 11 |
| 240 | **WV760600** | CIRCUIT BOARD | MK-H | MK－Hシート | | | 11 |
| 260 | **WF00100R** | BIND HEAD TAPPING SCREW-P | 3.0X10 MFZN2W3 | Pタイト十BIND | | 14 | 01 |
| 262 | **WF76550R** | PW HEAD TAPPING SCREW-P | 3.0X10-10 MFZN2W3 | Pタイト十PWH | | 2 | 01 |
| 270 | **V2798500** | SPRING R | GH WHITE/BLACK | スプリングR | } | 88 | 01 |
| 270 | **VZ41790R** | SPRING R | GH WHITE/BLACK | スプリングR | } | 88 | |
| 280 | **WJ027800** | ACTUATE RUBBER, NES | GH,GHD,HE,HED,NWK | 駆動ラバーNES | | 88 | 01 |
| 290 | **V6274301** | GREASE | G-1006Y 50g | グリス | | | |
| 340 | **VV467900** | STOPPER FELT A | 35.5X20 | ストッパーサポートA | | 7 | 03 |
| 350 | **VV468100** | STOPPER FELT B | 24X20 | ストッパーサポートB | | 12 | 03 |
| 380 | **ZH216800** | ESC RUBBER OCT | | ESCラバーOCT | | 7 | |
| 390 | **ZH216900** | ESC RUBBER DASH | | ESCラバーDASH | | | |
| | | | | | | | |
| | | TOOL | | 工具 | | | |
| | **TX000671** | ROD | | ロッド | | | 99 |

✻: New Parts

RANK: Japan only

# ■ ELECTRICAL PARTS

## AJK/DJK/JK

| REF NO. | PART NO. | DESCRIPTION | | 部品名 | REMARKS | QTY | RANK |
|---|---|---|---|---|---|---|---|
| | | ELECTRICAL PARTS | | 電気部品 | CLP-565GP/CLP-565GPWH | | |
| | -- | CIRCUIT BOARD | AJK | AJKシート | (ZG42470)(YF543D0) (ZG71740) | | |
| | -- | CIRCUIT BOARD | DJK | DJKシート | (ZG42470)(YF543D0) (ZG71730) | | |
| | -- | CIRCUIT BOARD | JK | JKシート | (ZG42470)(YF543D0) (ZG71760) | | |
| | **ZJ421700** | CIRCUIT BOARD | DM | DMシート | (ZJ42160)(YF515B0) | | |
| | -- | CIRCUIT BOARD | FU | FUシート | (ZJ05460)(X9604B0) (ZJ05450) | | |
| | **ZG425800** | CIRCUIT BOARD | LCD | LCDシート | (ZG85900)(YF544B0) | | |
| | **WV760600** | CIRCUIT BOARD | MK-H | MK-Hシート | (WV35460)(YC333D0) | | 11 |
| | **WV760400** | CIRCUIT BOARD | MK-L | MK-Lシート | (WV35460)(YC333D0) | | 11 |
| | **WV760500** | CIRCUIT BOARD | MK-M | MK-Mシート | (WV35460)(YC333D0) | | 11 |
| | **WP029200** | CIRCUIT BOARD | PEDAL | PEDALシート | (WQ65870)(X9561D0) | | 05 |
| | -- | CIRCUIT BOARD | PL | PLシート | (ZJ12410)(XR898A0) (ZJ08790) | | |
| | **ZG462000** | CIRCUIT BOARD | PNL | PNLシート | (ZG46220)(YF555D0) | | |
| | **ZH423800** | CIRCUIT BOARD | PSW | PSWシート | (ZG46220)(YF555D0) | | |
| | **ZG462100** | CIRCUIT BOARD | VR | VRシート | (ZG46220)(YF555D0) | | |
| | **ZJ436200** | CIRCUIT BOARD | PS | PSシート | (ZJ43610)(YF524E0) | | |
| | | | | | | | |
| | -- | CIRCUIT BOARD | AJK | AJKシート | (ZG42470)(YF543D0) (ZG71740) | | |
| | -- | CIRCUIT BOARD | DJK | DJKシート | (ZG42470)(YF543D0) (ZG71730) | | |
| | -- | CIRCUIT BOARD | JK | JKシート | (ZG42470)(YF543D0) (ZG71760) | | |
| CN1 | **VF283100** | CONNECTOR | PH 13P TE | ベースポスト | | | |
| CN2 | **VB390700** | CONNECTOR | PH 11P TE | ベースポスト | | | |
| CN101 | **VB390700** | CONNECTOR | PH 11P TE | ベースポスト | | | |
| CN102 | -- | CONNECTOR | PH 2P TE | ベースポスト | (VB38980) | | |
| CN103 | **VL844700** | CONNECTOR | XH 3P TE | ベーススツキポスト | | | |
| CN104 | **VB390200** | CONNECTOR | PH 6P TE | ベースポスト | | | 01 |
| CN105 | **VB390100** | CONNECTOR | PH 5P TE | ベースポスト | | | |
| CN106 | **WH382500** | USB CONNECTOR | UAR27 4P SE | USBコネクタ | USB TO DEVICE | | 01 |
| CN107 | **V902080R** | USB CONNECTOR | USB 4P SE | USBコネクタB | USB TO HOST | | 02 |
| CN107 | **ZC886500** | USB CONNECTOR | USB 4P SE | USBコネクタB | | | 03 |
| CN201 | **VB858400** | CONNECTOR | PH 5P SE | ベースポスト | | | |
| CN202 | **VB858500** | CONNECTOR | PH 6P SE | ベースポスト | | | |
| IC201 | **VD47320R** | PHOTO COUPLER | 6N137-000E | フォトカプラ | | | 05 |
| IC201 | **ZC344600** | PHOTO COUPLER | 6N137(F) | フォトカプラ | | | 02 |
| JK1 | **VS11540R** | PHONE CONNECTOR BLACK | LGR4609-7100F | ホーンコネクタ（黒） | AUX OUT L/L+R | | 01 |
| JK2 | **VS11540R** | PHONE CONNECTOR BLACK | LGR4609-7100F | ホーンコネクタ（黒） | AUX OUT R | | 01 |
| JK101 | **WJ306200** | PHONE CONNECTOR | MSJ-064-15A B AG | ホーンコネクタ | PHONES | | 01 |
| JK102 | **WJ306200** | PHONE CONNECTOR | MSJ-064-15A B AG | ホーンコネクタ | PHONES | | 01 |
| JK103 | **ZA590000** | PHONE CONNECTOR | MINI STEREO | ホーンコネクタ | AUX IN | | 01 |
| JK201 | **VT20250R** | DIN CONNECTOR | 5P YKF51-5066 | DINコネクタ | MIDI IN | | 01 |
| JK201 | **ZF234100** | DIN CONNECTOR | 5P HDC-052AP | DINコネクタ | | | 02 |
| JK202 | **VT20250R** | DIN CONNECTOR | 5P YKF51-5066 | DINコネクタ | MIDI OUT | | 01 |
| JK202 | **ZF234100** | DIN CONNECTOR | 5P HDC-052AP | DINコネクタ | | | 02 |
| JK203 | **VT20250R** | DIN CONNECTOR | 5P YKF51-5066 | DINコネクタ | MIDI THRU | | 01 |
| JK203 | **ZF234100** | DIN CONNECTOR | 5P HDC-052AP | DINコネクタ | | | 02 |
| JK204 | **V487480R** | DIN CONNECTOR | 6P MD-S6130 | ミニDINコネクタ | PEDAL | | 02 |
| R117 | **V9295000** | CARBON RESISTOR | 33.0 1/2 J YOKOSUT | カーボン抵抗 | | | 01 |
| -120 | **V9295000** | CARBON RESISTOR | 33.0 1/2 J YOKOSUT | カーボン抵抗 | | | 01 |
| RY1 | **V8616501** | RELAY | DC G6S-2 12V | リレー12V | | | 06 |
| RY1 | **WB17080R** | RELAY | DC NA-12W-K 12V | リレー12V | | | 04 |
| RY2 | **V8616501** | RELAY | DC G6S-2 12V | リレー12V | | | 06 |
| RY2 | **WB17080R** | RELAY | DC NA-12W-K 12V | リレー12V | | | 04 |
| C4 | **US065100** | CERAMIC CAPACITOR (CHIP) | 0.100 50V Z RECT. | チップセラF | | | |
| C6 | **US065100** | CERAMIC CAPACITOR (CHIP) | 0.100 50V Z RECT. | チップセラF | | | |
| C7 | **US065100** | CERAMIC CAPACITOR (CHIP) | 0.100 50V Z RECT. | チップセラF | | | |
| C9 | **US063100** | CERAMIC CAPACITOR (CHIP) | 1000P 50V K RECT. | チップセラ（B） | | | |
| -12 | **US063100** | CERAMIC CAPACITOR (CHIP) | 1000P 50V K RECT. | チップセラ（B） | | | |
| C13 | **US065100** | CERAMIC CAPACITOR (CHIP) | 0.100 50V Z RECT. | チップセラF | | | |
| C19 | **US065100** | CERAMIC CAPACITOR (CHIP) | 0.100 50V Z RECT. | チップセラF | | | |
| -21 | **US065100** | CERAMIC CAPACITOR (CHIP) | 0.100 50V Z RECT. | チップセラF | | | |
| C32 | **US061470** | CERAMIC CAPACITOR (CHIP) | 47P 50V J RECT. | チップセラ（CH） | | | |
| C33 | **US061470** | CERAMIC CAPACITOR (CHIP) | 47P 50V J RECT. | チップセラ（CH） | | | |
| C34 | **US062330** | CERAMIC CAPACITOR (CHIP) | 330P 50V J RECT. | チップセラ（SL） | | | |
| -41 | **US062330** | CERAMIC CAPACITOR (CHIP) | 330P 50V J RECT. | チップセラ（SL） | | | |
| C34 | **WU839300** | CERAMIC CAPACITOR (CHIP) | 330P 50V J 1608 TA | チップセラ | | | |
| -41 | **WU839300** | CERAMIC CAPACITOR (CHIP) | 330P 50V J 1608 TA | チップセラ | | | |
| C46 | **US063100** | CERAMIC CAPACITOR (CHIP) | 1000P 50V K RECT. | チップセラ（B） | | | |
| C47 | **US063100** | CERAMIC CAPACITOR (CHIP) | 1000P 50V K RECT. | チップセラ（B） | | | |
| C48 | **US064100** | CERAMIC CAPACITOR (CHIP) | 0.0100 50V K RECT. | チップセラ（B） | | | |
| C51 | **US063100** | CERAMIC CAPACITOR (CHIP) | 1000P 50V K RECT. | チップセラ（B） | | | |

✻: New Parts

RANK: Japan only

## AJK/DJK/JK

| REF NO. | PART NO. | DESCRIPTION | | 部品名 | REMARKS | QTY | RANK |
|---|---|---|---|---|---|---|---|
| C52 | **US065100** | CERAMIC CAPACITOR (CHIP) | 0.100 50V Z RECT. | チップセラ F | | | |
| C54 | **US063100** | CERAMIC CAPACITOR (CHIP) | 1000P 50V K RECT. | チップセラ(B) | | | |
| C55 | **US065100** | CERAMIC CAPACITOR (CHIP) | 0.100 50V Z RECT. | チップセラ F | | | |
| -62 | **US065100** | CERAMIC CAPACITOR (CHIP) | 0.100 50V Z RECT. | チップセラ F | | | |
| C101 | **US064100** | CERAMIC CAPACITOR (CHIP) | 0.0100 50V K RECT. | チップセラ(B) | | | |
| C102 | **US064100** | CERAMIC CAPACITOR (CHIP) | 0.0100 50V K RECT. | チップセラ(B) | | | |
| C105 | **US065100** | CERAMIC CAPACITOR (CHIP) | 0.100 50V Z RECT. | チップセラ F | | | |
| C116 | **US062100** | CERAMIC CAPACITOR (CHIP) | 100P 50V J RECT. | チップセラ(SL) | | | |
| C117 | **US062100** | CERAMIC CAPACITOR (CHIP) | 100P 50V J RECT. | チップセラ(SL) | | | |
| C120 | **US065100** | CERAMIC CAPACITOR (CHIP) | 0.100 50V Z RECT. | チップセラ F | | | |
| C123 | **US065100** | CERAMIC CAPACITOR (CHIP) | 0.100 50V Z RECT. | チップセラ F | | | |
| C126 | **US063100** | CERAMIC CAPACITOR (CHIP) | 1000P 50V K RECT. | チップセラ(B) | | | |
| C127 | **US063100** | CERAMIC CAPACITOR (CHIP) | 1000P 50V K RECT. | チップセラ(B) | | | |
| C128 | **US065100** | CERAMIC CAPACITOR (CHIP) | 0.100 50V Z RECT. | チップセラ F | | | |
| C129 | **US065100** | CERAMIC CAPACITOR (CHIP) | 0.100 50V Z RECT. | チップセラ F | | | |
| C137 | **US064100** | CERAMIC CAPACITOR (CHIP) | 0.0100 50V K RECT. | チップセラ(B) | | | |
| C140 | **US065100** | CERAMIC CAPACITOR (CHIP) | 0.100 50V Z RECT. | チップセラ F | | | |
| -143 | **US065100** | CERAMIC CAPACITOR (CHIP) | 0.100 50V Z RECT. | チップセラ F | | | |
| C147 | **US064100** | CERAMIC CAPACITOR (CHIP) | 0.0100 50V K RECT. | チップセラ(B) | | | |
| -150 | **US064100** | CERAMIC CAPACITOR (CHIP) | 0.0100 50V K RECT. | チップセラ(B) | | | |
| C202 | **US065100** | CERAMIC CAPACITOR (CHIP) | 0.100 50V Z RECT. | チップセラ F | | | |
| C203 | **US065100** | CERAMIC CAPACITOR (CHIP) | 0.100 50V Z RECT. | チップセラ F | | | |
| C204 | **US064100** | CERAMIC CAPACITOR (CHIP) | 0.0100 50V K RECT. | チップセラ(B) | | | |
| C205 | **US062100** | CERAMIC CAPACITOR (CHIP) | 100P 50V J RECT. | チップセラ(SL) | | | |
| -208 | **US062100** | CERAMIC CAPACITOR (CHIP) | 100P 50V J RECT. | チップセラ(SL) | | | |
| C205 | **V3152100** | CERAMIC CAPACITOR (CHIP) | 100P 50V J KAKUTE | チップセラ CH | | | 01 |
| -208 | **V3152100** | CERAMIC CAPACITOR (CHIP) | 100P 50V J KAKUTE | チップセラ CH | | | 01 |
| D201 | **VT332900** | DIODE | 1SS355 TE-17 TP 1A 40V | ダイオード | | | |
| D201 | **WG139300** | DIODE | KDS4148U-RTK/P TE | ダイオード | | | |
| IC1 | **X5049A0R** | IC | NJM4556AM-TE1 | IC | OP AMP | | 02 |
| IC2 | **X5482A00** | IC | NE5532DR | IC | OP AMP | | 01 |
| IC101 | **X5482A00** | IC | NE5532DR | IC | OP AMP | | 01 |
| L1 | **VY657200** | CHIP INDUCTANCE | 600 BK1608HM601-T | チップインダクタ | | | |
| -4 | **VY657200** | CHIP INDUCTANCE | 600 BK1608HM601-T | チップインダクタ | | | |
| L1 | **WG595200** | CHIP INDUCTANCE | GZ1608D601 1608 | チップインダクタ | | | |
| -4 | **WG595200** | CHIP INDUCTANCE | GZ1608D601 1608 | チップインダクタ | | | |
| L101 | **V523910R** | COMMON MODE COIL | DLP31SN121ML2L | コモンモードコイル | | | 03 |
| L201 | **VY657200** | CHIP INDUCTANCE | 600 BK1608HM601-T | チップインダクタ | | | |
| -204 | **VY657200** | CHIP INDUCTANCE | 600 BK1608HM601-T | チップインダクタ | | | |
| L201 | **WG595200** | CHIP INDUCTANCE | GZ1608D601 1608 | チップインダクタ | | | |
| -204 | **WG595200** | CHIP INDUCTANCE | GZ1608D601 1608 | チップインダクタ | | | |
| L206 | **VY657200** | CHIP INDUCTANCE | 600 BK1608HM601-T | チップインダクタ | | | |
| L206 | **WG595200** | CHIP INDUCTANCE | GZ1608D601 1608 | チップインダクタ | | | |
| L207 | **VY657200** | CHIP INDUCTANCE | 600 BK1608HM601-T | チップインダクタ | | | |
| L207 | **WG595200** | CHIP INDUCTANCE | GZ1608D601 1608 | チップインダクタ | | | |
| L208 | **VQ72490R** | CHIP INDUCTANCE | BK212 5HM601-T | チップインダクタ | | | 01 |
| -211 | **VQ72490R** | CHIP INDUCTANCE | BK212 5HM601-T | チップインダクタ | | | 01 |
| R3 | **RD356390** | CARBON RESISTOR (CHIP) | 3.9K 63M J RECT. | チップ抵抗 | | | |
| R4 | **RD356470** | CARBON RESISTOR (CHIP) | 4.7K 63M J RECT. | チップ抵抗 | | | |
| R7 | **RD356390** | CARBON RESISTOR (CHIP) | 3.9K 63M J RECT. | チップ抵抗 | | | |
| R8 | **RD356470** | CARBON RESISTOR (CHIP) | 4.7K 63M J RECT. | チップ抵抗 | | | |
| R9 | **RD357100** | CARBON RESISTOR (CHIP) | 10.0K 63M J RECT. | チップ抵抗 | | | |
| -24 | **RD357100** | CARBON RESISTOR (CHIP) | 10.0K 63M J RECT. | チップ抵抗 | | | |
| R25 | **RD355100** | CARBON RESISTOR (CHIP) | 100.0 63M J RECT. | チップ抵抗 | | | |
| R26 | **RD355100** | CARBON RESISTOR (CHIP) | 100.0 63M J RECT. | チップ抵抗 | | | |
| R29 | **RD356390** | CARBON RESISTOR (CHIP) | 3.9K 63M J RECT. | チップ抵抗 | | | |
| R30 | **RD356390** | CARBON RESISTOR (CHIP) | 3.9K 63M J RECT. | チップ抵抗 | | | |
| R31 | **RD357100** | CARBON RESISTOR (CHIP) | 10.0K 63M J RECT. | チップ抵抗 | | | |
| R32 | **RD357100** | CARBON RESISTOR (CHIP) | 10.0K 63M J RECT. | チップ抵抗 | | | |
| R33 | **RD355560** | CARBON RESISTOR (CHIP) | 560.0 63M J RECT. | チップ抵抗 | | | |
| R34 | **RD355560** | CARBON RESISTOR (CHIP) | 560.0 63M J RECT. | チップ抵抗 | | | |
| R35 | **RD356470** | CARBON RESISTOR (CHIP) | 4.7K 63M J RECT. | チップ抵抗 | | | |
| R36 | **RD356470** | CARBON RESISTOR (CHIP) | 4.7K 63M J RECT. | チップ抵抗 | | | |
| R37 | **RD350000** | CARBON RESISTOR (CHIP) | 0 63M J RECT. | チップ抵抗 | | | |
| -40 | **RD350000** | CARBON RESISTOR (CHIP) | 0 63M J RECT. | チップ抵抗 | | | |
| R103 | **RD350000** | CARBON RESISTOR (CHIP) | 0 63M J RECT. | チップ抵抗 | | | |
| R104 | **RD350000** | CARBON RESISTOR (CHIP) | 0 63M J RECT. | チップ抵抗 | | | |
| R105 | **RD355150** | CARBON RESISTOR (CHIP) | 150.0 63M J RECT. | チップ抵抗 | | | |
| R106 | **RD355150** | CARBON RESISTOR (CHIP) | 150.0 63M J RECT. | チップ抵抗 | | | |
| R107 | **RD350000** | CARBON RESISTOR (CHIP) | 0 63M J RECT. | チップ抵抗 | | | |

✻: New Parts

RANK: Japan only

## AJK/DJK/JK

| REF NO. | PART NO. | DESCRIPTION | | 部品名 | REMARKS | QTY | RANK |
|---|---|---|---|---|---|---|---|
| R108 | **RD350000** | CARBON RESISTOR (CHIP) | 0 63M J RECT. | チップ抵抗 | | | |
| R113 | **RD35718R** | CARBON RESISTOR (CHIP) | 18.0K 63M J RECT. | チップ抵抗 | | | 01 |
| R114 | **RD35718R** | CARBON RESISTOR (CHIP) | 18.0K 63M J RECT. | チップ抵抗 | | | 01 |
| R115 | **RD356390** | CARBON RESISTOR (CHIP) | 3.9K 63M J RECT. | チップ抵抗 | | | |
| R116 | **RD356470** | CARBON RESISTOR (CHIP) | 4.7K 63M J RECT. | チップ抵抗 | | | |
| R121 | **RD355100** | CARBON RESISTOR (CHIP) | 100.0 63M J RECT. | チップ抵抗 | | | |
| R122 | **RD355100** | CARBON RESISTOR (CHIP) | 100.0 63M J RECT. | チップ抵抗 | | | |
| R123 | **RD350000** | CARBON RESISTOR (CHIP) | 0 63M J RECT. | チップ抵抗 | | | |
| R124 | **RD350000** | CARBON RESISTOR (CHIP) | 0 63M J RECT. | チップ抵抗 | | | |
| R125 | **RD35718R** | CARBON RESISTOR (CHIP) | 18.0K 63M J RECT. | チップ抵抗 | | | 01 |
| R126 | **RD35718R** | CARBON RESISTOR (CHIP) | 18.0K 63M J RECT. | チップ抵抗 | | | 01 |
| R127 | **RD350000** | CARBON RESISTOR (CHIP) | 0 63M J RECT. | チップ抵抗 | | | |
| R128 | **RD355100** | CARBON RESISTOR (CHIP) | 100.0 63M J RECT. | チップ抵抗 | | | |
| R129 | **RD356470** | CARBON RESISTOR (CHIP) | 4.7K 63M J RECT. | チップ抵抗 | | | |
| R201 | **RD357150** | CARBON RESISTOR (CHIP) | 15.0K 63M J RECT. | チップ抵抗 | | | |
| R202 | **RD357220** | CARBON RESISTOR (CHIP) | 22.0K 63M J RECT. | チップ抵抗 | | | |
| R203 | **RD357150** | CARBON RESISTOR (CHIP) | 15.0K 63M J RECT. | チップ抵抗 | | | |
| R204 | **RD357270** | CARBON RESISTOR (CHIP) | 27.0K 63M J RECT. | チップ抵抗 | | | |
| R205 | **RD256100** | CARBON RESISTOR (CHIP) | 1.0K 0.1 J RECT. | チップ抵抗 | | | |
| R206 | **RD357100** | CARBON RESISTOR (CHIP) | 10.0K 63M J RECT. | チップ抵抗 | | | |
| R207 | **RD357100** | CARBON RESISTOR (CHIP) | 10.0K 63M J RECT. | チップ抵抗 | | | |
| R208 | **RD356150** | CARBON RESISTOR (CHIP) | 1.5K 63M J RECT. | チップ抵抗 | | | |
| R209 | **RD356150** | CARBON RESISTOR (CHIP) | 1.5K 63M J RECT. | チップ抵抗 | | | |
| R210 | **RD355221** | CARBON RESISTOR (CHIP) | 220.0 63M J RECT. | チップ抵抗 | | | 01 |
| -214 | **RD355221** | CARBON RESISTOR (CHIP) | 220.0 63M J RECT. | チップ抵抗 | | | 01 |
| TR1 | **WW782200** | DIGITAL TRANSISTOR | DTC023JUBTL | デジタルトランジスタ | | | 01 |
| TR201 | **VJ927100** | TRANSISTOR | 2SC2712-Y(TE85R,F) | トランジスタ 2SC | | | |
| -204 | **VJ927100** | TRANSISTOR | 2SC2712-Y(TE85R,F) | トランジスタ 2SC | | | |
| TR201 | **VV556400** | TRANSISTOR | 2SC2412K Q,R,S TP | トランジスタ | | | |
| -204 | **VV556400** | TRANSISTOR | 2SC2412K Q,R,S TP | トランジスタ | | | |
| TR201 | **VV92540R** | TRANSISTOR | 2SC2712-GR(TE85L,F) | チップトランジスタ | | | 01 |
| -204 | **VV92540R** | TRANSISTOR | 2SC2712-GR(TE85L,F) | チップトランジスタ | | | 01 |
| TR201 | **WC529400** | TRANSISTOR | KTC3875S-Y,GR-RTK | トランジスタ | | | |
| -204 | **WC529400** | TRANSISTOR | KTC3875S-Y,GR-RTK | トランジスタ | | | |
| C3 | **UR838101** | ELECTROLYTIC CAPACITOR | 100.00 16.0V RX TP | ケミコン | | | 01 |
| C3 | **V350850R** | ELECTROLYTIC CAPACITOR | 100.00 16.0V TP | ケミコン | | | |
| C5 | **UR838101** | ELECTROLYTIC CAPACITOR | 100.00 16.0V RX TP | ケミコン | | | 01 |
| C5 | **V350850R** | ELECTROLYTIC CAPACITOR | 100.00 16.0V TP | ケミコン | | | |
| C8 | **UR838101** | ELECTROLYTIC CAPACITOR | 100.00 16.0V RX TP | ケミコン | | | 01 |
| C8 | **V350850R** | ELECTROLYTIC CAPACITOR | 100.00 16.0V TP | ケミコン | | | |
| C18 | **UR838101** | ELECTROLYTIC CAPACITOR | 100.00 16.0V RX TP | ケミコン | | | 01 |
| C18 | **V350850R** | ELECTROLYTIC CAPACITOR | 100.00 16.0V TP | ケミコン | | | |
| C22 | **UR867100** | ELECTROLYTIC CAPACITOR | 10.00 50.0V RX TP | ケミコン | | | |
| -29 | **UR867100** | ELECTROLYTIC CAPACITOR | 10.00 50.0V RX TP | ケミコン | | | |
| C22 | **V3512300** | ELECTROLYTIC CAPACITOR | 10.00 50.0V TP | ケミコン | | | |
| -29 | **V3512300** | ELECTROLYTIC CAPACITOR | 10.00 50.0V TP | ケミコン | | | |
| C42 | **UN84710R** | ELECTROLYTIC CAPACITOR BP | 10.00 25.0V RX TP | BPケミコン | | | 01 |
| C43 | **UN84710R** | ELECTROLYTIC CAPACITOR BP | 10.00 25.0V RX TP | BPケミコン | | | 01 |
| C44 | **UN848100** | ELECTROLYTIC CAPACITOR BP | 100.00 25.0V RX TP | BPケミコン | | | 01 |
| C45 | **UN848100** | ELECTROLYTIC CAPACITOR BP | 100.00 25.0V RX TP | BPケミコン | | | 01 |
| C103 | **UR838101** | ELECTROLYTIC CAPACITOR | 100.00 16.0V RX TP | ケミコン | | | 01 |
| C103 | **V350850R** | ELECTROLYTIC CAPACITOR | 100.00 16.0V TP | ケミコン | | | |
| C104 | **UR838101** | ELECTROLYTIC CAPACITOR | 100.00 16.0V RX TP | ケミコン | | | 01 |
| C104 | **V350850R** | ELECTROLYTIC CAPACITOR | 100.00 16.0V TP | ケミコン | | | |
| C110 | **UR867100** | ELECTROLYTIC CAPACITOR | 10.00 50.0V RX TP | ケミコン | | | |
| C110 | **V3512300** | ELECTROLYTIC CAPACITOR | 10.00 50.0V TP | ケミコン | | | |
| C111 | **UR867100** | ELECTROLYTIC CAPACITOR | 10.00 50.0V RX TP | ケミコン | | | |
| C111 | **V3512300** | ELECTROLYTIC CAPACITOR | 10.00 50.0V TP | ケミコン | | | |
| C121 | **UR838101** | ELECTROLYTIC CAPACITOR | 100.00 16.0V RX TP | ケミコン | | | 01 |
| C121 | **V350850R** | ELECTROLYTIC CAPACITOR | 100.00 16.0V TP | ケミコン | | | |
| C122 | **UR838101** | ELECTROLYTIC CAPACITOR | 100.00 16.0V RX TP | ケミコン | | | 01 |
| C122 | **V350850R** | ELECTROLYTIC CAPACITOR | 100.00 16.0V TP | ケミコン | | | |
| C124 | **UN84710R** | ELECTROLYTIC CAPACITOR BP | 10.00 25.0V RX TP | BPケミコン | | | 01 |
| C125 | **UN84710R** | ELECTROLYTIC CAPACITOR BP | 10.00 25.0V RX TP | BPケミコン | | | 01 |
| C201 | **UR867220** | ELECTROLYTIC CAPACITOR | 22.00 50.0V RX TP | ケミコン | | | |
| L7 | **GE300670** | FERRITE BEAD | BL02RN2R1P1A TATET | フェライトビーズ | | | 02 |
| L8 | **GE300670** | FERRITE BEAD | BL02RN2R1P1A TATET | フェライトビーズ | | | 02 |
| L105 | **GE300670** | FERRITE BEAD | BL02RN2R1P1A TATET | フェライトビーズ | | | 02 |
| -110 | **GE300670** | FERRITE BEAD | BL02RN2R1P1A TATET | フェライトビーズ | | | 02 |
| D1 | **VB941200** | DIODE | 1SS133,1SS176 TE-5 | ダイオード | | | |

✻: New Parts

RANK: Japan only

## AJK/DJK/JK and DM

| REF NO. | PART NO. | DESCRIPTION | | 部品名 | REMARKS | QTY | RANK |
|---|---|---|---|---|---|---|---|
| D1 | **VD631600** | DIODE | 1SS133,176,HSS104 | ダイオード | | | |
| D2 | **VB941200** | DIODE | 1SS133,1SS176 TE-5 | ダイオード | | | |
| D2 | **VD631600** | DIODE | 1SS133,176,HSS104 | ダイオード | | | |
| D202 | **VB941200** | DIODE | 1SS133,1SS176 TE-5 | ダイオード | | | |
| -207 | **VB941200** | DIODE | 1SS133,1SS176 TE-5 | ダイオード | | | |
| D202 | **VD631600** | DIODE | 1SS133,176,HSS104 | ダイオード | | | |
| -207 | **VD631600** | DIODE | 1SS133,176,HSS104 | ダイオード | | | |
| | | | | | | | |
| | **ZJ421700** | CIRCUIT BOARD | DM | DMシート | (ZJ42160)(YF515B0) | | |
| CN1 | **LB918020** | CONNECTOR | XH 2P TE | ベーススツキポスト | | | |
| CN500 | **LB932080** | CONNECTOR | VH 8P TE | ベースポスト | | | |
| CN502 | **LB93204R** | CONNECTOR | VH 4P TE | ベースポスト | | | 01 |
| C1 | **US634100** | CERAMIC CAPACITOR (CHIP) | 0.010 16V K RECT. | チップセラ（B） | | | |
| C2 | **UF14810R** | ELECTROLYTIC CAPACITOR(CHIP) | 100 25V | チップケミコン | | | 01 |
| C4 | **V8085400** | CERAMIC CAPACITOR (CHIP) | 0.1000 25V K RECT. | チップセラ（B） | | | |
| C4 | **WU447000** | CERAMIC CAPACITOR (CHIP) | 0.1000 50V K RECT. | チップセラ（B） | | | |
| C5 | **US625100** | CERAMIC CAPACITOR (CHIP) | 0.100 10V K RECT. | チップセラ（BJ） | | | 01 |
| C7 | **V8085400** | CERAMIC CAPACITOR (CHIP) | 0.1000 25V K RECT. | チップセラ（B） | | | |
| C7 | **WU447000** | CERAMIC CAPACITOR (CHIP) | 0.1000 50V K RECT. | チップセラ（B） | | | |
| C9 | **US625100** | CERAMIC CAPACITOR (CHIP) | 0.100 10V K RECT. | チップセラ（BJ） | | | 01 |
| C11 | **WN110600** | MONOLITHIC CERAMIC CAP(CHIP) | 4.700 25V K KAKUTE | チップ積層セラコン | | | 01 |
| C12 | **V8085400** | CERAMIC CAPACITOR (CHIP) | 0.1000 25V K RECT. | チップセラ（B） | | | |
| C12 | **WU447000** | CERAMIC CAPACITOR (CHIP) | 0.1000 50V K RECT. | チップセラ（B） | | | |
| C13 | **V8085400** | CERAMIC CAPACITOR (CHIP) | 0.1000 25V K RECT. | チップセラ（B） | | | |
| C13 | **WU447000** | CERAMIC CAPACITOR (CHIP) | 0.1000 50V K RECT. | チップセラ（B） | | | |
| C14 | **US663100** | CERAMIC CAPACITOR (CHIP) | 1000P 50V K RECT. | チップセラ（B） | | | 01 |
| C15 | **WU539500** | CERAMIC CAPACITOR (CHIP) | 10.0000 16V M KAKU | チップセラ | | | 01 |
| C16 | **V8085400** | CERAMIC CAPACITOR (CHIP) | 0.1000 25V K RECT. | チップセラ（B） | | | |
| C16 | **WU447000** | CERAMIC CAPACITOR (CHIP) | 0.1000 50V K RECT. | チップセラ（B） | | | |
| C19 | **WU539500** | CERAMIC CAPACITOR (CHIP) | 10.0000 16V M KAKU | チップセラ | | | 01 |
| C20 | **V8085400** | CERAMIC CAPACITOR (CHIP) | 0.1000 25V K RECT. | チップセラ（B） | | | |
| C20 | **WU447000** | CERAMIC CAPACITOR (CHIP) | 0.1000 50V K RECT. | チップセラ（B） | | | |
| C21 | **US642220** | CERAMIC CAPACITOR (CHIP) | 220P 25V J RECT. | チップセラ（CH） | | | 01 |
| C22 | **US643470** | CERAMIC CAPACITOR (CHIP) | 4700P 25V K RECT. | チップセラ（B） | | | 01 |
| C23 | **US044220** | CERAMIC CAPACITOR (CHIP) | 0.0220 25V K RECT. | チップセラ（B） | | | |
| C24 | **US642220** | CERAMIC CAPACITOR (CHIP) | 220P 25V J RECT. | チップセラ（CH） | | | 01 |
| C30 | **US625100** | CERAMIC CAPACITOR (CHIP) | 0.100 10V K RECT. | チップセラ（BJ） | | | 01 |
| C32 | **US625100** | CERAMIC CAPACITOR (CHIP) | 0.100 10V K RECT. | チップセラ（BJ） | | | 01 |
| C36 | **US625100** | CERAMIC CAPACITOR (CHIP) | 0.100 10V K RECT. | チップセラ（BJ） | | | 01 |
| C44 | **US625100** | CERAMIC CAPACITOR (CHIP) | 0.100 10V K RECT. | チップセラ（BJ） | | | 01 |
| C47 | **US625100** | CERAMIC CAPACITOR (CHIP) | 0.100 10V K RECT. | チップセラ（BJ） | | | 01 |
| C49 | **US625100** | CERAMIC CAPACITOR (CHIP) | 0.100 10V K RECT. | チップセラ（BJ） | | | 01 |
| C52 | **US625100** | CERAMIC CAPACITOR (CHIP) | 0.100 10V K RECT. | チップセラ（BJ） | | | 01 |
| C53 | **US662100** | CERAMIC CAPACITOR (CHIP) | 100P 50V J RECT. | チップセラ（CH） | | | |
| C55 | **US662100** | CERAMIC CAPACITOR (CHIP) | 100P 50V J RECT. | チップセラ（CH） | | | |
| C56 | **US662100** | CERAMIC CAPACITOR (CHIP) | 100P 50V J RECT. | チップセラ（CH） | | | |
| C59 | **US625100** | CERAMIC CAPACITOR (CHIP) | 0.100 10V K RECT. | チップセラ（BJ） | | | 01 |
| -69 | **US625100** | CERAMIC CAPACITOR (CHIP) | 0.100 10V K RECT. | チップセラ（BJ） | | | 01 |
| C72 | **US625100** | CERAMIC CAPACITOR (CHIP) | 0.100 10V K RECT. | チップセラ（BJ） | | | 01 |
| -75 | **US625100** | CERAMIC CAPACITOR (CHIP) | 0.100 10V K RECT. | チップセラ（BJ） | | | 01 |
| C81 | **US625100** | CERAMIC CAPACITOR (CHIP) | 0.100 10V K RECT. | チップセラ（BJ） | | | 01 |
| C83 | **US625100** | CERAMIC CAPACITOR (CHIP) | 0.100 10V K RECT. | チップセラ（BJ） | | | 01 |
| C85 | **US625100** | CERAMIC CAPACITOR (CHIP) | 0.100 10V K RECT. | チップセラ（BJ） | | | 01 |
| C86 | **US625100** | CERAMIC CAPACITOR (CHIP) | 0.100 10V K RECT. | チップセラ（BJ） | | | 01 |
| C90 | **V8085400** | CERAMIC CAPACITOR (CHIP) | 0.1000 25V K RECT. | チップセラ（B） | | | |
| C90 | **WU447000** | CERAMIC CAPACITOR (CHIP) | 0.1000 50V K RECT. | チップセラ（B） | | | |
| C100 | **US625100** | CERAMIC CAPACITOR (CHIP) | 0.100 10V K RECT. | チップセラ（BJ） | | | 01 |
| C112 | **WG888300** | MONOLITHIC CERAMIC CAP(CHIP) | 10.0 6.3V K TP | チップ積層セラコン | | | 01 |
| C112 | **WP882000** | CERAMIC CAPACITOR (CHIP) | 10U 6.3V K RECT. | チップセラ | | | |
| C113 | **US625100** | CERAMIC CAPACITOR (CHIP) | 0.100 10V K RECT. | チップセラ（BJ） | | | 01 |
| -116 | **US625100** | CERAMIC CAPACITOR (CHIP) | 0.100 10V K RECT. | チップセラ（BJ） | | | 01 |
| C119 | **US625100** | CERAMIC CAPACITOR (CHIP) | 0.100 10V K RECT. | チップセラ（BJ） | | | 01 |
| C120 | **US625100** | CERAMIC CAPACITOR (CHIP) | 0.100 10V K RECT. | チップセラ（BJ） | | | 01 |
| C121 | **WG888300** | MONOLITHIC CERAMIC CAP(CHIP) | 10.0 6.3V K TP | チップ積層セラコン | | | 01 |
| C121 | **WP882000** | CERAMIC CAPACITOR (CHIP) | 10U 6.3V K RECT. | チップセラ | | | |
| C122 | **US625100** | CERAMIC CAPACITOR (CHIP) | 0.100 10V K RECT. | チップセラ（BJ） | | | 01 |
| C123 | **WG888300** | MONOLITHIC CERAMIC CAP(CHIP) | 10.0 6.3V K TP | チップ積層セラコン | | | 01 |
| C123 | **WP882000** | CERAMIC CAPACITOR (CHIP) | 10U 6.3V K RECT. | チップセラ | | | |
| C124 | **US625100** | CERAMIC CAPACITOR (CHIP) | 0.100 10V K RECT. | チップセラ（BJ） | | | 01 |
| C141 | **US662100** | CERAMIC CAPACITOR (CHIP) | 100P 50V J RECT. | チップセラ（CH） | | | |

✻: New Parts

RANK: Japan only

## DM

| REF NO. | PART NO. | DESCRIPTION | | 部品名 | REMARKS | QTY | RANK |
|---|---|---|---|---|---|---|---|
| -151 | **US662100** | CERAMIC CAPACITOR (CHIP) | 100P 50V J RECT. | チップセラ（CH） | | | |
| C221 | **US625100** | CERAMIC CAPACITOR (CHIP) | 0.100 10V K RECT. | チップセラ（BJ） | | | 01 |
| C222 | **US625100** | CERAMIC CAPACITOR (CHIP) | 0.100 10V K RECT. | チップセラ（BJ） | | | 01 |
| C223 | **US663100** | CERAMIC CAPACITOR (CHIP) | 1000P 50V K RECT. | チップセラ（B） | | | 01 |
| C224 | **WG888300** | MONOLITHIC CERAMIC CAP(CHIP) | 10.0 6.3V K TP | チップ積層セラコン | | | 01 |
| C224 | **WP882000** | CERAMIC CAPACITOR (CHIP) | 10U 6.3V K RECT. | チップセラ | | | |
| C225 | **US663100** | CERAMIC CAPACITOR (CHIP) | 1000P 50V K RECT. | チップセラ（B） | | | 01 |
| C226 | **US625100** | CERAMIC CAPACITOR (CHIP) | 0.100 10V K RECT. | チップセラ（BJ） | | | 01 |
| C227 | **WG888300** | MONOLITHIC CERAMIC CAP(CHIP) | 10.0 6.3V K TP | チップ積層セラコン | | | 01 |
| C227 | **WP882000** | CERAMIC CAPACITOR (CHIP) | 10U 6.3V K RECT. | チップセラ | | | |
| C229 | **US625100** | CERAMIC CAPACITOR (CHIP) | 0.100 10V K RECT. | チップセラ（BJ） | | | 01 |
| C230 | **US662100** | CERAMIC CAPACITOR (CHIP) | 100P 50V J RECT. | チップセラ（CH） | | | |
| C232 | **US662100** | CERAMIC CAPACITOR (CHIP) | 100P 50V J RECT. | チップセラ（CH） | | | |
| -235 | **US662100** | CERAMIC CAPACITOR (CHIP) | 100P 50V J RECT. | チップセラ（CH） | | | |
| C237 | **US625100** | CERAMIC CAPACITOR (CHIP) | 0.100 10V K RECT. | チップセラ（BJ） | | | 01 |
| C239 | **US625100** | CERAMIC CAPACITOR (CHIP) | 0.100 10V K RECT. | チップセラ（BJ） | | | 01 |
| C241 | **US625100** | CERAMIC CAPACITOR (CHIP) | 0.100 10V K RECT. | チップセラ（BJ） | | | 01 |
| C242 | **US662100** | CERAMIC CAPACITOR (CHIP) | 100P 50V J RECT. | チップセラ（CH） | | | |
| C243 | **US662100** | CERAMIC CAPACITOR (CHIP) | 100P 50V J RECT. | チップセラ（CH） | | | |
| C244 | **US663100** | CERAMIC CAPACITOR (CHIP) | 1000P 50V K RECT. | チップセラ（B） | | | 01 |
| C245 | **US662100** | CERAMIC CAPACITOR (CHIP) | 100P 50V J RECT. | チップセラ（CH） | | | |
| C246 | **US663100** | CERAMIC CAPACITOR (CHIP) | 1000P 50V K RECT. | チップセラ（B） | | | 01 |
| C247 | **US662100** | CERAMIC CAPACITOR (CHIP) | 100P 50V J RECT. | チップセラ（CH） | | | |
| C248 | **US663100** | CERAMIC CAPACITOR (CHIP) | 1000P 50V K RECT. | チップセラ（B） | | | 01 |
| C249 | **US662100** | CERAMIC CAPACITOR (CHIP) | 100P 50V J RECT. | チップセラ（CH） | | | |
| -252 | **US662100** | CERAMIC CAPACITOR (CHIP) | 100P 50V J RECT. | チップセラ（CH） | | | |
| C253 | **US625100** | CERAMIC CAPACITOR (CHIP) | 0.100 10V K RECT. | チップセラ（BJ） | | | 01 |
| C254 | **US662100** | CERAMIC CAPACITOR (CHIP) | 100P 50V J RECT. | チップセラ（CH） | | | |
| C256 | **US662100** | CERAMIC CAPACITOR (CHIP) | 100P 50V J RECT. | チップセラ（CH） | | | |
| C257 | **US661470** | CERAMIC CAPACITOR (CHIP) | 47P 50V J RECT. | チップセラ（CH） | | | 01 |
| C259 | **US663100** | CERAMIC CAPACITOR (CHIP) | 1000P 50V K RECT. | チップセラ（B） | | | 01 |
| C260 | **US662100** | CERAMIC CAPACITOR (CHIP) | 100P 50V J RECT. | チップセラ（CH） | | | |
| C261 | **US661470** | CERAMIC CAPACITOR (CHIP) | 47P 50V J RECT. | チップセラ（CH） | | | 01 |
| C262 | **US663100** | CERAMIC CAPACITOR (CHIP) | 1000P 50V K RECT. | チップセラ（B） | | | 01 |
| C263 | **US662100** | CERAMIC CAPACITOR (CHIP) | 100P 50V J RECT. | チップセラ（CH） | | | |
| C264 | **US663100** | CERAMIC CAPACITOR (CHIP) | 1000P 50V K RECT. | チップセラ（B） | | | 01 |
| C266 | **US663100** | CERAMIC CAPACITOR (CHIP) | 1000P 50V K RECT. | チップセラ（B） | | | 01 |
| C267 | **US662100** | CERAMIC CAPACITOR (CHIP) | 100P 50V J RECT. | チップセラ（CH） | | | |
| C268 | **US625100** | CERAMIC CAPACITOR (CHIP) | 0.100 10V K RECT. | チップセラ（BJ） | | | 01 |
| C269 | **US625100** | CERAMIC CAPACITOR (CHIP) | 0.100 10V K RECT. | チップセラ（BJ） | | | 01 |
| C271 | **WG888300** | MONOLITHIC CERAMIC CAP(CHIP) | 10.0 6.3V K TP | チップ積層セラコン | | | 01 |
| C271 | **WP882000** | CERAMIC CAPACITOR (CHIP) | 10U 6.3V K RECT. | チップセラ | | | |
| C272 | **WG888300** | MONOLITHIC CERAMIC CAP(CHIP) | 10.0 6.3V K TP | チップ積層セラコン | | | 01 |
| C272 | **WP882000** | CERAMIC CAPACITOR (CHIP) | 10U 6.3V K RECT. | チップセラ | | | |
| C273 | **US625100** | CERAMIC CAPACITOR (CHIP) | 0.100 10V K RECT. | チップセラ（BJ） | | | 01 |
| -295 | **US625100** | CERAMIC CAPACITOR (CHIP) | 0.100 10V K RECT. | チップセラ（BJ） | | | 01 |
| C411 | **US625100** | CERAMIC CAPACITOR (CHIP) | 0.100 10V K RECT. | チップセラ（BJ） | | | 01 |
| C413 | **US625100** | CERAMIC CAPACITOR (CHIP) | 0.100 10V K RECT. | チップセラ（BJ） | | | 01 |
| C414 | **US625100** | CERAMIC CAPACITOR (CHIP) | 0.100 10V K RECT. | チップセラ（BJ） | | | 01 |
| C415 | **UF037100** | ELECTROLYTIC CAPACITOR(CHIP) | 10 16V | チップケミコン | | | |
| C416 | **US625100** | CERAMIC CAPACITOR (CHIP) | 0.100 10V K RECT. | チップセラ（BJ） | | | 01 |
| C417 | **US625100** | CERAMIC CAPACITOR (CHIP) | 0.100 10V K RECT. | チップセラ（BJ） | | | 01 |
| C418 | **UF037100** | ELECTROLYTIC CAPACITOR(CHIP) | 10 16V | チップケミコン | | | |
| C421 | **UF037100** | ELECTROLYTIC CAPACITOR(CHIP) | 10 16V | チップケミコン | | | |
| -426 | **UF037100** | ELECTROLYTIC CAPACITOR(CHIP) | 10 16V | チップケミコン | | | |
| C429 | **US663150** | CERAMIC CAPACITOR (CHIP) | 1500P 50V K RECT. | チップセラ（B） | | | 01 |
| C430 | **US663150** | CERAMIC CAPACITOR (CHIP) | 1500P 50V K RECT. | チップセラ（B） | | | 01 |
| C431 | **US662150** | CERAMIC CAPACITOR (CHIP) | 150P 50V J RECT. | チップセラ（SL） | | | 01 |
| -434 | **US662150** | CERAMIC CAPACITOR (CHIP) | 150P 50V J RECT. | チップセラ（SL） | | | 01 |
| C436 | **US662470** | CERAMIC CAPACITOR (CHIP) | 470P 50V K RECT. | チップセラ（B） | | | 01 |
| C437 | **US662470** | CERAMIC CAPACITOR (CHIP) | 470P 50V K RECT. | チップセラ（B） | | | 01 |
| C438 | **US663100** | CERAMIC CAPACITOR (CHIP) | 1000P 50V K RECT. | チップセラ（B） | | | 01 |
| C439 | **US663100** | CERAMIC CAPACITOR (CHIP) | 1000P 50V K RECT. | チップセラ（B） | | | 01 |
| C445 | **US634100** | CERAMIC CAPACITOR (CHIP) | 0.010 16V K RECT. | チップセラ（B） | | | |
| C449 | **US663100** | CERAMIC CAPACITOR (CHIP) | 1000P 50V K RECT. | チップセラ（B） | | | 01 |
| -451 | **US663100** | CERAMIC CAPACITOR (CHIP) | 1000P 50V K RECT. | チップセラ（B） | | | 01 |
| C454 | **US663100** | CERAMIC CAPACITOR (CHIP) | 1000P 50V K RECT. | チップセラ（B） | | | 01 |
| -456 | **US663100** | CERAMIC CAPACITOR (CHIP) | 1000P 50V K RECT. | チップセラ（B） | | | 01 |
| C457 | **US634100** | CERAMIC CAPACITOR (CHIP) | 0.010 16V K RECT. | チップセラ（B） | | | |
| C458 | **US663100** | CERAMIC CAPACITOR (CHIP) | 1000P 50V K RECT. | チップセラ（B） | | | 01 |

✻: New Parts

RANK: Japan only

## DM

| REF NO. | PART NO. | DESCRIPTION | | 部品名 | REMARKS | QTY | RANK |
|---|---|---|---|---|---|---|---|
| C459 | **US634100** | CERAMIC CAPACITOR (CHIP) | 0.010 16V K RECT. | チップセラ（B） | | | |
| C461 | **UF037100** | ELECTROLYTIC CAPACITOR(CHIP) | 10 16V | チップケミコン | | | |
| C504 | **ZC041800** | ELECTROLYTIC CAPACITOR(CHIP) | 220.00 25.0V | チップケミコン CL | | | 01 |
| C506 | **US046100** | CERAMIC CAPACITOR (CHIP) | 1.00 25V K RECT. | チップセラ（B） | | | 01 |
| -509 | **US046100** | CERAMIC CAPACITOR (CHIP) | 1.00 25V K RECT. | チップセラ（B） | | | 01 |
| C514 | **US662100** | CERAMIC CAPACITOR (CHIP) | 100P 50V J RECT. | チップセラ（CH） | | | |
| C519 | **US662100** | CERAMIC CAPACITOR (CHIP) | 100P 50V J RECT. | チップセラ（CH） | | | |
| C520 | **V8085400** | CERAMIC CAPACITOR (CHIP) | 0.1000 25V K RECT. | チップセラ（B） | | | |
| -525 | **V8085400** | CERAMIC CAPACITOR (CHIP) | 0.1000 25V K RECT. | チップセラ（B） | | | |
| C520 | **WU447000** | CERAMIC CAPACITOR (CHIP) | 0.1000 50V K RECT. | チップセラ（B） | | | |
| -525 | **WU447000** | CERAMIC CAPACITOR (CHIP) | 0.1000 50V K RECT. | チップセラ（B） | | | |
| C526 | **US663100** | CERAMIC CAPACITOR (CHIP) | 1000P 50V K RECT. | チップセラ（B） | | | 01 |
| C527 | **US663100** | CERAMIC CAPACITOR (CHIP) | 1000P 50V K RECT. | チップセラ（B） | | | 01 |
| C556 | **US046100** | CERAMIC CAPACITOR (CHIP) | 1.00 25V K RECT. | チップセラ（B） | | | 01 |
| -559 | **US046100** | CERAMIC CAPACITOR (CHIP) | 1.00 25V K RECT. | チップセラ（B） | | | 01 |
| C564 | **US662100** | CERAMIC CAPACITOR (CHIP) | 100P 50V J RECT. | チップセラ（CH） | | | |
| C569 | **US662100** | CERAMIC CAPACITOR (CHIP) | 100P 50V J RECT. | チップセラ（CH） | | | |
| C570 | **V8085400** | CERAMIC CAPACITOR (CHIP) | 0.1000 25V K RECT. | チップセラ（B） | | | |
| -575 | **V8085400** | CERAMIC CAPACITOR (CHIP) | 0.1000 25V K RECT. | チップセラ（B） | | | |
| C570 | **WU447000** | CERAMIC CAPACITOR (CHIP) | 0.1000 50V K RECT. | チップセラ（B） | | | |
| -575 | **WU447000** | CERAMIC CAPACITOR (CHIP) | 0.1000 50V K RECT. | チップセラ（B） | | | |
| C576 | **US663100** | CERAMIC CAPACITOR (CHIP) | 1000P 50V K RECT. | チップセラ（B） | | | 01 |
| C577 | **US663100** | CERAMIC CAPACITOR (CHIP) | 1000P 50V K RECT. | チップセラ（B） | | | 01 |
| C578 | **ZC041800** | ELECTROLYTIC CAPACITOR(CHIP) | 220.00 25.0V | チップケミコン CL | | | 01 |
| D1 | **WM940400** | DIODE | RB070M-30TR TP | ダイオード | | | 01 |
| D2 | **WM940400** | DIODE | RB070M-30TR TP | ダイオード | | | 01 |
| D3 | **VT332900** | DIODE | 1SS355 TE-17 TP 1A 40V | ダイオード | | | |
| D3 | **WG139300** | DIODE | KDS4148U-RTK/P TE | ダイオード | | | |
| D4 | **VT332900** | DIODE | 1SS355 TE-17 TP 1A 40V | ダイオード | | | |
| D4 | **WG139300** | DIODE | KDS4148U-RTK/P TE | ダイオード | | | |
| D100 | **VT332900** | DIODE | 1SS355 TE-17 TP 1A 40V | ダイオード | | | |
| D100 | **WG139300** | DIODE | KDS4148U-RTK/P TE | ダイオード | | | |
| D300 | **VT332900** | DIODE | 1SS355 TE-17 TP 1A 40V | ダイオード | | | |
| D300 | **WG139300** | DIODE | KDS4148U-RTK/P TE | ダイオード | | | |
| D403 | **VT332900** | DIODE | 1SS355 TE-17 TP 1A 40V | ダイオード | | | |
| D403 | **WG139300** | DIODE | KDS4148U-RTK/P TE | ダイオード | | | |
| IC1 | **YC714A00** | IC | LT3506AEDHD#TRPBF | IC | SWITCHING REGULATOR | | 06 |
| IC2 | **X9347A00** | IC | R3112N291A-TR-FE | IC | VOLTAGE DETECTOR | | 01 |
| IC3 | **XY806A0R** | IC | TC7WH14FU(TE12L,F) | IC | INVERTER | | 02 |
| IC4 | **XY806A0R** | IC | TC7WH14FU(TE12L,F) | IC | INVERTER | | 02 |
| IC5 | **X9347A00** | IC | R3112N291A-TR-FE | IC | VOLTAGE DETECTOR | | 01 |
| IC19 | **XY806A0R** | IC | TC7WH14FU(TE12L,F) | IC | INVERTER | | 02 |
| IC23 | **X2377A0R** | IC | SN74LV21APWR | IC | AND | | 01 |
| IC23 | **X5542A00** | IC | TC74VHC21FT(EL) | IC | | | 01 |
| IC26 | **X9347A00** | IC | R3112N291A-TR-FE | IC | VOLTAGE DETECTOR | | 01 |
| IC27 | **X6611A00** | IC | SN74LV123APWR | IC | SINGLE SHOT | | 01 |
| IC27 | **X8506A02** | IC | TC74VHC123AFT EL,K | IC | | | 01 |
| IC121 | **X4943D00** | IC | W9825G6JH-6 | IC | WORK SDRAM 256M (L) | | 05 |
| IC121 | **X9556C00** | IC | M12L2561616A-6TG2A | IC | | | 04 |
| * IC160 | **YF657B00** | IC | S29GL01GS10TFI020 | IC | FLASH ROM 1G WAVE | | |
| IC400 | **X8324A00** | IC | AK4396VF-E2 | IC | DAC | | 06 |
| IC401 | **X5219A0R** | IC | AK5381VT-E2 | IC | ADC | | 05 |
| IC405 | **YC777A00** | IC | BA4560RFV | IC | OP AMP | | 01 |
| IC406 | **YC777A00** | IC | BA4560RFV | IC | OP AMP | | 01 |
| L1 | **WM459400** | CHIP INDUCTANCE | BLM18PG121SN1D 160 | チップインダクタ | | | 01 |
| L2 | **WT550300** | CHIP INDUCTANCE | 4.7U 7E06NB-4R7N-R | チップインダクタ | | | 01 |
| L3 | **WT550300** | CHIP INDUCTANCE | 4.7U 7E06NB-4R7N-R | チップインダクタ | | | 01 |
| L4 | **V2747000** | CHIP INDUCTANCE | BLM18PG600SN1 | チップインダクタ | | | |
| L8 | **V2747000** | CHIP INDUCTANCE | BLM18PG600SN1 | チップインダクタ | | | |
| L9 | **V2747000** | CHIP INDUCTANCE | BLM18PG600SN1 | チップインダクタ | | | |
| L220 | **V2747000** | CHIP INDUCTANCE | BLM18PG600SN1 | チップインダクタ | | | |
| L221 | **V2747000** | CHIP INDUCTANCE | BLM18PG600SN1 | チップインダクタ | | | |
| L235 | **V2747000** | CHIP INDUCTANCE | BLM18PG600SN1 | チップインダクタ | | | |
| L236 | **WK139000** | CHIP INDUCTANCE | 600 BK1005HM601-T | チップインダクタ | | | 01 |
| L400 | **WK139000** | CHIP INDUCTANCE | 600 BK1005HM601-T | チップインダクタ | | | 01 |
| -406 | **WK139000** | CHIP INDUCTANCE | 600 BK1005HM601-T | チップインダクタ | | | 01 |
| R1 | **RD457100** | CARBON RESISTOR (CHIP) | 10.0K 63M J RECT. | チップ抵抗 | | | |
| R5 | **RD454680** | CARBON RESISTOR (CHIP) | 68.0 63M J RECT. | チップ抵抗 | | | 01 |
| R6 | **RD456100** | CARBON RESISTOR (CHIP) | 1.0K 63M J RECT. | チップ抵抗 | | | |
| R7 | **RD454680** | CARBON RESISTOR (CHIP) | 68.0 63M J RECT. | チップ抵抗 | | | 01 |

*: New Parts

RANK: Japan only

## DM

| REF NO. | PART NO. | DESCRIPTION | | 部品名 | REMARKS | QTY | RANK |
|---|---|---|---|---|---|---|---|
| R8 | **RD454680** | CARBON RESISTOR (CHIP) | 68.0 63M J RECT. | チップ抵抗 | | | 01 |
| R9 | **RA156330** | METAL FILM RESISTOR (CHIP) | 3.3K 63M D RECT. | チップ金被抵抗 | | | 01 |
| R10 | **RA157510** | METAL FILM RESISTOR (CHIP) | 51.0K 63M D RECT. | チップ金被抵抗 | | | 01 |
| R11 | **RA157270** | METAL FILM RESISTOR (CHIP) | 27.0K 63M D RECT. | チップ金被抵抗 | | | 01 |
| R12 | **RA156470** | METAL FILM RESISTOR (CHIP) | 4.7K 63M D RECT. | チップ金被抵抗 | | | 01 |
| R13 | **RA157100** | METAL FILM RESISTOR (CHIP) | 10.0K 63M D RECT. | チップ金被抵抗 | | | 01 |
| R14 | **RA157100** | METAL FILM RESISTOR (CHIP) | 10.0K 63M D RECT. | チップ金被抵抗 | | | 01 |
| R15 | **RD45000R** | CARBON RESISTOR (CHIP) | 0.00 63M J RECT. | チップ抵抗 | | | 01 |
| R16 | **RD457680** | CARBON RESISTOR (CHIP) | 68.0K 63M J RECT. | チップ抵抗 | | | 01 |
| R17 | **RD457390** | CARBON RESISTOR (CHIP) | 39.0K 63M J RECT. | チップ抵抗 | | | 01 |
| R18 | **RD45522R** | CARBON RESISTOR (CHIP) | 220.0 63M J RECT. | チップ抵抗 | | | 01 |
| R19 | **RD45522R** | CARBON RESISTOR (CHIP) | 220.0 63M J RECT. | チップ抵抗 | | | 01 |
| R21 | **RD458470** | CARBON RESISTOR (CHIP) | 470.0K 63M J RECT. | チップ抵抗 | | | |
| R24 | **RD457100** | CARBON RESISTOR (CHIP) | 10.0K 63M J RECT. | チップ抵抗 | | | |
| R25 | **RD456390** | CARBON RESISTOR (CHIP) | 3.9K 63M J RECT. | チップ抵抗 | | | |
| R26 | **RD456560** | CARBON RESISTOR (CHIP) | 5.6K 63M J RECT. | チップ抵抗 | | | |
| R105 | **RD454680** | CARBON RESISTOR (CHIP) | 68.0 63M J RECT. | チップ抵抗 | | | 01 |
| R106 | **RD454470** | CARBON RESISTOR (CHIP) | 47.0 63M J RECT. | チップ抵抗 | | | 01 |
| R107 | **RD454680** | CARBON RESISTOR (CHIP) | 68.0 63M J RECT. | チップ抵抗 | | | 01 |
| R108 | **RD454680** | CARBON RESISTOR (CHIP) | 68.0 63M J RECT. | チップ抵抗 | | | 01 |
| R110 | **RD454680** | CARBON RESISTOR (CHIP) | 68.0 63M J RECT. | チップ抵抗 | | | 01 |
| R115 | **RD454680** | CARBON RESISTOR (CHIP) | 68.0 63M J RECT. | チップ抵抗 | | | 01 |
| R120 | **RD454680** | CARBON RESISTOR (CHIP) | 68.0 63M J RECT. | チップ抵抗 | | | 01 |
| R121 | **RD454680** | CARBON RESISTOR (CHIP) | 68.0 63M J RECT. | チップ抵抗 | | | 01 |
| R123 | **RD454680** | CARBON RESISTOR (CHIP) | 68.0 63M J RECT. | チップ抵抗 | | | 01 |
| R124 | **RD457100** | CARBON RESISTOR (CHIP) | 10.0K 63M J RECT. | チップ抵抗 | | | |
| R125 | **RD457100** | CARBON RESISTOR (CHIP) | 10.0K 63M J RECT. | チップ抵抗 | | | |
| R126 | **RD45000R** | CARBON RESISTOR (CHIP) | 0.00 63M J RECT. | チップ抵抗 | | | 01 |
| -128 | **RD45000R** | CARBON RESISTOR (CHIP) | 0.00 63M J RECT. | チップ抵抗 | | | 01 |
| R132 | **RD454220** | CARBON RESISTOR (CHIP) | 22.0 63M J RECT. | チップ抵抗 | | | |
| R134 | **RD454220** | CARBON RESISTOR (CHIP) | 22.0 63M J RECT. | チップ抵抗 | | | |
| -136 | **RD454220** | CARBON RESISTOR (CHIP) | 22.0 63M J RECT. | チップ抵抗 | | | |
| R145 | **RD454680** | CARBON RESISTOR (CHIP) | 68.0 63M J RECT. | チップ抵抗 | | | 01 |
| R146 | **RD454680** | CARBON RESISTOR (CHIP) | 68.0 63M J RECT. | チップ抵抗 | | | 01 |
| R149 | **RD457100** | CARBON RESISTOR (CHIP) | 10.0K 63M J RECT. | チップ抵抗 | | | |
| -151 | **RD457100** | CARBON RESISTOR (CHIP) | 10.0K 63M J RECT. | チップ抵抗 | | | |
| R152 | **RD454680** | CARBON RESISTOR (CHIP) | 68.0 63M J RECT. | チップ抵抗 | | | 01 |
| R158 | **RD454220** | CARBON RESISTOR (CHIP) | 22.0 63M J RECT. | チップ抵抗 | | | |
| R165 | **RD454680** | CARBON RESISTOR (CHIP) | 68.0 63M J RECT. | チップ抵抗 | | | 01 |
| -168 | **RD454680** | CARBON RESISTOR (CHIP) | 68.0 63M J RECT. | チップ抵抗 | | | 01 |
| R172 | **RD457100** | CARBON RESISTOR (CHIP) | 10.0K 63M J RECT. | チップ抵抗 | | | |
| R173 | **RD457100** | CARBON RESISTOR (CHIP) | 10.0K 63M J RECT. | チップ抵抗 | | | |
| R174 | **RD454680** | CARBON RESISTOR (CHIP) | 68.0 63M J RECT. | チップ抵抗 | | | 01 |
| R175 | **RD454680** | CARBON RESISTOR (CHIP) | 68.0 63M J RECT. | チップ抵抗 | | | 01 |
| R180 | **RD457100** | CARBON RESISTOR (CHIP) | 10.0K 63M J RECT. | チップ抵抗 | | | |
| R182 | **RD457100** | CARBON RESISTOR (CHIP) | 10.0K 63M J RECT. | チップ抵抗 | | | |
| R196 | **RD456470** | CARBON RESISTOR (CHIP) | 4.7K 63M J RECT. | チップ抵抗 | | | |
| R197 | **RD456470** | CARBON RESISTOR (CHIP) | 4.7K 63M J RECT. | チップ抵抗 | | | |
| R221 | **RD45000R** | CARBON RESISTOR (CHIP) | 0.00 63M J RECT. | チップ抵抗 | | | 01 |
| R222 | **RD45000R** | CARBON RESISTOR (CHIP) | 0.00 63M J RECT. | チップ抵抗 | | | 01 |
| R223 | **RD457100** | CARBON RESISTOR (CHIP) | 10.0K 63M J RECT. | チップ抵抗 | | | |
| R224 | **RD457100** | CARBON RESISTOR (CHIP) | 10.0K 63M J RECT. | チップ抵抗 | | | |
| R227 | **RD454680** | CARBON RESISTOR (CHIP) | 68.0 63M J RECT. | チップ抵抗 | | | 01 |
| R233 | **RD457100** | CARBON RESISTOR (CHIP) | 10.0K 63M J RECT. | チップ抵抗 | | | |
| R234 | **RD458470** | CARBON RESISTOR (CHIP) | 470.0K 63M J RECT. | チップ抵抗 | | | |
| R235 | **RD456100** | CARBON RESISTOR (CHIP) | 1.0K 63M J RECT. | チップ抵抗 | | | |
| R236 | **RD454680** | CARBON RESISTOR (CHIP) | 68.0 63M J RECT. | チップ抵抗 | | | 01 |
| -238 | **RD454680** | CARBON RESISTOR (CHIP) | 68.0 63M J RECT. | チップ抵抗 | | | 01 |
| R240 | **RD455100** | CARBON RESISTOR (CHIP) | 100.0 63M J RECT. | チップ抵抗 | | | |
| R241 | **RD456820** | CARBON RESISTOR (CHIP) | 8.2K 63M J RECT. | チップ抵抗 | | | 01 |
| R243 | **RD456680** | CARBON RESISTOR (CHIP) | 6.8K 63M J RECT. | チップ抵抗 | | | |
| R244 | **RD456390** | CARBON RESISTOR (CHIP) | 3.9K 63M J RECT. | チップ抵抗 | | | |
| R245 | **RD457100** | CARBON RESISTOR (CHIP) | 10.0K 63M J RECT. | チップ抵抗 | | | |
| R246 | **RD454680** | CARBON RESISTOR (CHIP) | 68.0 63M J RECT. | チップ抵抗 | | | 01 |
| R247 | **RD456390** | CARBON RESISTOR (CHIP) | 3.9K 63M J RECT. | チップ抵抗 | | | |
| R249 | **RD456390** | CARBON RESISTOR (CHIP) | 3.9K 63M J RECT. | チップ抵抗 | | | |
| -251 | **RD456390** | CARBON RESISTOR (CHIP) | 3.9K 63M J RECT. | チップ抵抗 | | | |
| R254 | **RD456390** | CARBON RESISTOR (CHIP) | 3.9K 63M J RECT. | チップ抵抗 | | | |
| R266 | **RD459100** | CARBON RESISTOR (CHIP) | 1.0M 63M J RECT. | チップ抵抗 | | | |
| R267 | **RD458470** | CARBON RESISTOR (CHIP) | 470.0K 63M J RECT. | チップ抵抗 | | | |

✻: New Parts

RANK: Japan only

## DM

| REF NO. | PART NO. | DESCRIPTION | | 部品名 | REMARKS | QTY | RANK |
|---|---|---|---|---|---|---|---|
| R268 | **RD458100** | CARBON RESISTOR (CHIP) | 100.0K 63M J RECT. | チップ抵抗 | | | |
| R269 | **RD45747R** | CARBON RESISTOR (CHIP) | 47.0K 63M J RECT. | チップ抵抗 | | | 01 |
| R270 | **RD458100** | CARBON RESISTOR (CHIP) | 100.0K 63M J RECT. | チップ抵抗 | | | |
| R273 | **RD456100** | CARBON RESISTOR (CHIP) | 1.0K 63M J RECT. | チップ抵抗 | | | |
| -275 | **RD456100** | CARBON RESISTOR (CHIP) | 1.0K 63M J RECT. | チップ抵抗 | | | |
| R279 | **RD454680** | CARBON RESISTOR (CHIP) | 68.0 63M J RECT. | チップ抵抗 | | | 01 |
| R280 | **RD457100** | CARBON RESISTOR (CHIP) | 10.0K 63M J RECT. | チップ抵抗 | | | |
| R281 | **RD454680** | CARBON RESISTOR (CHIP) | 68.0 63M J RECT. | チップ抵抗 | | | 01 |
| R288 | **RD454680** | CARBON RESISTOR (CHIP) | 68.0 63M J RECT. | チップ抵抗 | | | 01 |
| R289 | **RD457100** | CARBON RESISTOR (CHIP) | 10.0K 63M J RECT. | チップ抵抗 | | | |
| R291 | **RD457100** | CARBON RESISTOR (CHIP) | 10.0K 63M J RECT. | チップ抵抗 | | | |
| R293 | **RD454680** | CARBON RESISTOR (CHIP) | 68.0 63M J RECT. | チップ抵抗 | | | 01 |
| R294 | **RD454680** | CARBON RESISTOR (CHIP) | 68.0 63M J RECT. | チップ抵抗 | | | 01 |
| R295 | **RD457100** | CARBON RESISTOR (CHIP) | 10.0K 63M J RECT. | チップ抵抗 | | | |
| R401 | **RD45000R** | CARBON RESISTOR (CHIP) | 0.00 63M J RECT. | チップ抵抗 | | | 01 |
| R406 | **RD454680** | CARBON RESISTOR (CHIP) | 68.0 63M J RECT. | チップ抵抗 | | | 01 |
| -411 | **RD454680** | CARBON RESISTOR (CHIP) | 68.0 63M J RECT. | チップ抵抗 | | | 01 |
| R419 | **RA156560** | METAL FILM RESISTOR (CHIP) | 5.6K 63M D RECT. | チップ金被抵抗 | | | 01 |
| -422 | **RA156560** | METAL FILM RESISTOR (CHIP) | 5.6K 63M D RECT. | チップ金被抵抗 | | | 01 |
| R423 | **RA157330** | METAL FILM RESISTOR (CHIP) | 33.0K 63M D RECT. | チップ金被抵抗 | | | 01 |
| R424 | **RA157330** | METAL FILM RESISTOR (CHIP) | 33.0K 63M D RECT. | チップ金被抵抗 | | | 01 |
| R425 | **RD457100** | CARBON RESISTOR (CHIP) | 10.0K 63M J RECT. | チップ抵抗 | | | |
| R426 | **RD457100** | CARBON RESISTOR (CHIP) | 10.0K 63M J RECT. | チップ抵抗 | | | |
| R427 | **RA157330** | METAL FILM RESISTOR (CHIP) | 33.0K 63M D RECT. | チップ金被抵抗 | | | 01 |
| R428 | **RA156150** | METAL FILM RESISTOR (CHIP) | 1.5K 63M D RECT. | チップ金被抵抗 | | | |
| R429 | **RA156150** | METAL FILM RESISTOR (CHIP) | 1.5K 63M D RECT. | チップ金被抵抗 | | | |
| R430 | **RA157330** | METAL FILM RESISTOR (CHIP) | 33.0K 63M D RECT. | チップ金被抵抗 | | | 01 |
| R431 | **RA156150** | METAL FILM RESISTOR (CHIP) | 1.5K 63M D RECT. | チップ金被抵抗 | | | |
| R432 | **RA156150** | METAL FILM RESISTOR (CHIP) | 1.5K 63M D RECT. | チップ金被抵抗 | | | |
| R433 | **RD456560** | CARBON RESISTOR (CHIP) | 5.6K 63M J RECT. | チップ抵抗 | | | |
| R434 | **RD456560** | CARBON RESISTOR (CHIP) | 5.6K 63M J RECT. | チップ抵抗 | | | |
| R435 | **RD455100** | CARBON RESISTOR (CHIP) | 100.0 63M J RECT. | チップ抵抗 | | | |
| R436 | **RD455100** | CARBON RESISTOR (CHIP) | 100.0 63M J RECT. | チップ抵抗 | | | |
| R437 | **RD456470** | CARBON RESISTOR (CHIP) | 4.7K 63M J RECT. | チップ抵抗 | | | |
| R438 | **RD456470** | CARBON RESISTOR (CHIP) | 4.7K 63M J RECT. | チップ抵抗 | | | |
| R441 | **RD456470** | CARBON RESISTOR (CHIP) | 4.7K 63M J RECT. | チップ抵抗 | | | |
| R442 | **RD456470** | CARBON RESISTOR (CHIP) | 4.7K 63M J RECT. | チップ抵抗 | | | |
| R443 | **RD458100** | CARBON RESISTOR (CHIP) | 100.0K 63M J RECT. | チップ抵抗 | | | |
| R444 | **RD458100** | CARBON RESISTOR (CHIP) | 100.0K 63M J RECT. | チップ抵抗 | | | |
| R448 | **RD456470** | CARBON RESISTOR (CHIP) | 4.7K 63M J RECT. | チップ抵抗 | | | |
| R449 | **RD456470** | CARBON RESISTOR (CHIP) | 4.7K 63M J RECT. | チップ抵抗 | | | |
| R471 | **RD455100** | CARBON RESISTOR (CHIP) | 100.0 63M J RECT. | チップ抵抗 | | | |
| R472 | **RD455100** | CARBON RESISTOR (CHIP) | 100.0 63M J RECT. | チップ抵抗 | | | |
| R501 | **RD45000R** | CARBON RESISTOR (CHIP) | 0.00 63M J RECT. | チップ抵抗 | | | 01 |
| R503 | **RD45000R** | CARBON RESISTOR (CHIP) | 0.00 63M J RECT. | チップ抵抗 | | | 01 |
| R511 | **RD45000R** | CARBON RESISTOR (CHIP) | 0.00 63M J RECT. | チップ抵抗 | | | 01 |
| R515 | **RD45000R** | CARBON RESISTOR (CHIP) | 0.00 63M J RECT. | チップ抵抗 | | | 01 |
| RA115 | **WH211800** | RESISTOR ARRAY | 10K X 4 | 抵抗アレイ | | | 01 |
| RA116 | **WH211800** | RESISTOR ARRAY | 10K X 4 | 抵抗アレイ | | | 01 |
| RA120 | **WH206200** | RESISTOR ARRAY | 47 X 4 | 抵抗アレイ | | | 01 |
| RA121 | **WH206200** | RESISTOR ARRAY | 47 X 4 | 抵抗アレイ | | | 01 |
| RA124 | **WH205400** | RESISTOR ARRAY | 22 X 4 | 抵抗アレイ | | | 01 |
| -127 | **WH205400** | RESISTOR ARRAY | 22 X 4 | 抵抗アレイ | | | 01 |
| RA129 | **WH205400** | RESISTOR ARRAY | 22 X 4 | 抵抗アレイ | | | 01 |
| RA133 | **WH206200** | RESISTOR ARRAY | 47 X 4 | 抵抗アレイ | | | 01 |
| RA134 | **WH206200** | RESISTOR ARRAY | 47 X 4 | 抵抗アレイ | | | 01 |
| RA139 | **WH205400** | RESISTOR ARRAY | 22 X 4 | 抵抗アレイ | | | 01 |
| -142 | **WH205400** | RESISTOR ARRAY | 22 X 4 | 抵抗アレイ | | | 01 |
| RA161 | **WH206600** | RESISTOR ARRAY | 68 X 4 | 抵抗アレイ | | | 01 |
| RA162 | **WH206600** | RESISTOR ARRAY | 68 X 4 | 抵抗アレイ | | | 01 |
| RA165 | **WH206600** | RESISTOR ARRAY | 68 X 4 | 抵抗アレイ | | | 01 |
| RA177 | **WH211800** | RESISTOR ARRAY | 10K X 4 | 抵抗アレイ | | | 01 |
| RA193 | **WH211000** | RESISTOR ARRAY | 4.7K X 4 | 抵抗アレイ | | | 01 |
| RA194 | **WH211000** | RESISTOR ARRAY | 4.7K X 4 | 抵抗アレイ | | | 01 |
| RA220 | **WH211800** | RESISTOR ARRAY | 10K X 4 | 抵抗アレイ | | | 01 |
| RA223 | **WH213400** | RESISTOR ARRAY | 47K X 4 | 抵抗アレイ | | | 01 |
| RA224 | **WH210200** | RESISTOR ARRAY | 2.2K X 4 | 抵抗アレイ | | | 01 |
| TH1 | **WR725400** | CIRCUIT PROTECTOR | FSMD110-16 | POLYSWITCH | | | 01 |
| TR100 | **WW782200** | DIGITAL TRANSISTOR | DTC023JUBTL | デジタルトランジスタ | | | 01 |
| TR101 | **VY67770R** | DIGITAL TRANSISTOR | DTB123YK T146 | デジタルトランジスタ | | | 01 |

✻: New Parts

RANK: Japan only

## DM

| REF NO. | PART NO. | DESCRIPTION | | 部品名 | REMARKS | QTY | RANK |
|---|---|---|---|---|---|---|---|
| TR101 | **WG989900** | DIGITAL TRANSISTOR | KRA226S-RTK/P | デジタルトランジスタ | | | 01 |
| TR224 | **VY67770R** | DIGITAL TRANSISTOR | DTB123YK T146 | デジタルトランジスタ | | | 01 |
| TR224 | **WG989900** | DIGITAL TRANSISTOR | KRA226S-RTK/P | デジタルトランジスタ | | | 01 |
| TR225 | **WW782200** | DIGITAL TRANSISTOR | DTC023JUBTL | デジタルトランジスタ | | | 01 |
| -227 | **WW782200** | DIGITAL TRANSISTOR | DTC023JUBTL | デジタルトランジスタ | | | 01 |
| X220 | **WH521200** | QUARTZ CRYSTAL UNIT | 48MHz SG-310SCF | 水晶振動器 | | | 04 |
| X220 | **WM725500** | RESONATOR QUARTZ | 48MHz DSO321SR | 水晶発振器 | | | |
| C3 | **US663100** | CERAMIC CAPACITOR (CHIP) | 1000P 50V K RECT. | チップセラ（B） | | | 01 |
| C6 | **US625100** | CERAMIC CAPACITOR (CHIP) | 0.100 10V K RECT. | チップセラ（BJ） | | | 01 |
| C8 | **US635100** | CERAMIC CAPACITOR (CHIP) | 0.100 16V Z RECT. | チップセラ（F） | | | |
| C10 | **UF038100** | ELECTROLYTIC CAPACITOR(CHIP) | 100 16V | チップケミコン | | | |
| C28 | **US625100** | CERAMIC CAPACITOR (CHIP) | 0.100 10V K RECT. | チップセラ（BJ） | | | 01 |
| C29 | **US625100** | CERAMIC CAPACITOR (CHIP) | 0.100 10V K RECT. | チップセラ（BJ） | | | 01 |
| C31 | **US625100** | CERAMIC CAPACITOR (CHIP) | 0.100 10V K RECT. | チップセラ（BJ） | | | 01 |
| C33 | **US625100** | CERAMIC CAPACITOR (CHIP) | 0.100 10V K RECT. | チップセラ（BJ） | | | 01 |
| -35 | **US625100** | CERAMIC CAPACITOR (CHIP) | 0.100 10V K RECT. | チップセラ（BJ） | | | 01 |
| C37 | **US625100** | CERAMIC CAPACITOR (CHIP) | 0.100 10V K RECT. | チップセラ（BJ） | | | 01 |
| -43 | **US625100** | CERAMIC CAPACITOR (CHIP) | 0.100 10V K RECT. | チップセラ（BJ） | | | 01 |
| C45 | **US625100** | CERAMIC CAPACITOR (CHIP) | 0.100 10V K RECT. | チップセラ（BJ） | | | 01 |
| C46 | **US625100** | CERAMIC CAPACITOR (CHIP) | 0.100 10V K RECT. | チップセラ（BJ） | | | 01 |
| C48 | **US625100** | CERAMIC CAPACITOR (CHIP) | 0.100 10V K RECT. | チップセラ（BJ） | | | 01 |
| C50 | **US625100** | CERAMIC CAPACITOR (CHIP) | 0.100 10V K RECT. | チップセラ（BJ） | | | 01 |
| C51 | **US625100** | CERAMIC CAPACITOR (CHIP) | 0.100 10V K RECT. | チップセラ（BJ） | | | 01 |
| C70 | **US625100** | CERAMIC CAPACITOR (CHIP) | 0.100 10V K RECT. | チップセラ（BJ） | | | 01 |
| C71 | **US625100** | CERAMIC CAPACITOR (CHIP) | 0.100 10V K RECT. | チップセラ（BJ） | | | 01 |
| C76 | **US625100** | CERAMIC CAPACITOR (CHIP) | 0.100 10V K RECT. | チップセラ（BJ） | | | 01 |
| -80 | **US625100** | CERAMIC CAPACITOR (CHIP) | 0.100 10V K RECT. | チップセラ（BJ） | | | 01 |
| C82 | **US625100** | CERAMIC CAPACITOR (CHIP) | 0.100 10V K RECT. | チップセラ（BJ） | | | 01 |
| C84 | **US625100** | CERAMIC CAPACITOR (CHIP) | 0.100 10V K RECT. | チップセラ（BJ） | | | 01 |
| C91 | **V8085400** | CERAMIC CAPACITOR (CHIP) | 0.1000 25V K RECT. | チップセラ（B） | | | |
| C91 | **WU447000** | CERAMIC CAPACITOR (CHIP) | 0.1000 50V K RECT. | チップセラ（B） | | | |
| C92 | **V8085400** | CERAMIC CAPACITOR (CHIP) | 0.1000 25V K RECT. | チップセラ（B） | | | |
| C92 | **WU447000** | CERAMIC CAPACITOR (CHIP) | 0.1000 50V K RECT. | チップセラ（B） | | | |
| C102 | **US661100** | CERAMIC CAPACITOR (CHIP) | 10P 50V D RECT. | チップセラ（CH） | | | 01 |
| C103 | **US661100** | CERAMIC CAPACITOR (CHIP) | 10P 50V D RECT. | チップセラ（CH） | | | 01 |
| C105 | **WG888300** | MONOLITHIC CERAMIC CAP(CHIP) | 10.0 6.3V K TP | チップ積層セラコン | | | 01 |
| C105 | **WP882000** | CERAMIC CAPACITOR (CHIP) | 10U 6.3V K RECT. | チップセラ | | | |
| C106 | **US625100** | CERAMIC CAPACITOR (CHIP) | 0.100 10V K RECT. | チップセラ（BJ） | | | 01 |
| C109 | **US625100** | CERAMIC CAPACITOR (CHIP) | 0.100 10V K RECT. | チップセラ（BJ） | | | 01 |
| -111 | **US625100** | CERAMIC CAPACITOR (CHIP) | 0.100 10V K RECT. | チップセラ（BJ） | | | 01 |
| C117 | **US625100** | CERAMIC CAPACITOR (CHIP) | 0.100 10V K RECT. | チップセラ（BJ） | | | 01 |
| C118 | **US625100** | CERAMIC CAPACITOR (CHIP) | 0.100 10V K RECT. | チップセラ（BJ） | | | 01 |
| C131 | **WG888300** | MONOLITHIC CERAMIC CAP(CHIP) | 10.0 6.3V K TP | チップ積層セラコン | | | 01 |
| C131 | **WP882000** | CERAMIC CAPACITOR (CHIP) | 10U 6.3V K RECT. | チップセラ | | | |
| C132 | **US625100** | CERAMIC CAPACITOR (CHIP) | 0.100 10V K RECT. | チップセラ（BJ） | | | 01 |
| -138 | **US625100** | CERAMIC CAPACITOR (CHIP) | 0.100 10V K RECT. | チップセラ（BJ） | | | 01 |
| C152 | **US625100** | CERAMIC CAPACITOR (CHIP) | 0.100 10V K RECT. | チップセラ（BJ） | | | 01 |
| C153 | **US625100** | CERAMIC CAPACITOR (CHIP) | 0.100 10V K RECT. | チップセラ（BJ） | | | 01 |
| C220 | **US625100** | CERAMIC CAPACITOR (CHIP) | 0.100 10V K RECT. | チップセラ（BJ） | | | 01 |
| C228 | **US625100** | CERAMIC CAPACITOR (CHIP) | 0.100 10V K RECT. | チップセラ（BJ） | | | 01 |
| C231 | **US625100** | CERAMIC CAPACITOR (CHIP) | 0.100 10V K RECT. | チップセラ（BJ） | | | 01 |
| C238 | **US663100** | CERAMIC CAPACITOR (CHIP) | 1000P 50V K RECT. | チップセラ（B） | | | 01 |
| C240 | **US625100** | CERAMIC CAPACITOR (CHIP) | 0.100 10V K RECT. | チップセラ（BJ） | | | 01 |
| C255 | **US625100** | CERAMIC CAPACITOR (CHIP) | 0.100 10V K RECT. | チップセラ（BJ） | | | 01 |
| C258 | **UF038100** | ELECTROLYTIC CAPACITOR(CHIP) | 100 16V | チップケミコン | | | 01 |
| C265 | **US625100** | CERAMIC CAPACITOR (CHIP) | 0.100 10V K RECT. | チップセラ（BJ） | | | 01 |
| C270 | **WG888300** | MONOLITHIC CERAMIC CAP(CHIP) | 10.0 6.3V K TP | チップ積層セラコン | | | 01 |
| C270 | **WP882000** | CERAMIC CAPACITOR (CHIP) | 10U 6.3V K RECT. | チップセラ | | | |
| C296 | **WG888300** | MONOLITHIC CERAMIC CAP(CHIP) | 10.0 6.3V K TP | チップ積層セラコン | | | 01 |
| C296 | **WP882000** | CERAMIC CAPACITOR (CHIP) | 10U 6.3V K RECT. | チップセラ | | | |
| C297 | **US625100** | CERAMIC CAPACITOR (CHIP) | 0.100 10V K RECT. | チップセラ（BJ） | | | 01 |
| C400 | **US625100** | CERAMIC CAPACITOR (CHIP) | 0.100 10V K RECT. | チップセラ（BJ） | | | 01 |
| -410 | **US625100** | CERAMIC CAPACITOR (CHIP) | 0.100 10V K RECT. | チップセラ（BJ） | | | 01 |
| C412 | **US625100** | CERAMIC CAPACITOR (CHIP) | 0.100 10V K RECT. | チップセラ（BJ） | | | 01 |
| C419 | **US625100** | CERAMIC CAPACITOR (CHIP) | 0.100 10V K RECT. | チップセラ（BJ） | | | 01 |
| C420 | **US625100** | CERAMIC CAPACITOR (CHIP) | 0.100 10V K RECT. | チップセラ（BJ） | | | 01 |
| C427 | **US625100** | CERAMIC CAPACITOR (CHIP) | 0.100 10V K RECT. | チップセラ（BJ） | | | 01 |
| C428 | **US625100** | CERAMIC CAPACITOR (CHIP) | 0.100 10V K RECT. | チップセラ（BJ） | | | 01 |
| C435 | **US625100** | CERAMIC CAPACITOR (CHIP) | 0.100 10V K RECT. | チップセラ（BJ） | | | 01 |
| C440 | **US661100** | CERAMIC CAPACITOR (CHIP) | 10P 50V D RECT. | チップセラ（CH） | | | 01 |

✻: New Parts

RANK: Japan only

## DM

| REF NO. | PART NO. | DESCRIPTION | | 部品名 | REMARKS | QTY | RANK |
|---|---|---|---|---|---|---|---|
| C441 | **US661100** | CERAMIC CAPACITOR (CHIP) | 10P 50V D RECT. | チップセラ（CH） | | | 01 |
| C442 | **WN110600** | MONOLITHIC CERAMIC CAP(CHIP) | 4.700 25V K KAKUTE | チップ積層セラコン | | | 01 |
| C443 | **US634100** | CERAMIC CAPACITOR (CHIP) | 0.010 16V K RECT. | チップセラ（B） | | | |
| C444 | **US625100** | CERAMIC CAPACITOR (CHIP) | 0.100 10V K RECT. | チップセラ（BJ） | | | 01 |
| C446 | **US625100** | CERAMIC CAPACITOR (CHIP) | 0.100 10V K RECT. | チップセラ（BJ） | | | 01 |
| C447 | **US625100** | CERAMIC CAPACITOR (CHIP) | 0.100 10V K RECT. | チップセラ（BJ） | | | 01 |
| C448 | **UF038100** | ELECTROLYTIC CAPACITOR(CHIP) | 100 16V | チップケミコン | | | |
| C452 | **US625100** | CERAMIC CAPACITOR (CHIP) | 0.100 10V K RECT. | チップセラ（BJ） | | | 01 |
| C453 | **US625100** | CERAMIC CAPACITOR (CHIP) | 0.100 10V K RECT. | チップセラ（BJ） | | | 01 |
| C460 | **WG888300** | MONOLITHIC CERAMIC CAP(CHIP) | 10.0 6.3V K TP | チップ積層セラコン | | | 01 |
| C460 | **WP882000** | CERAMIC CAPACITOR (CHIP) | 10U 6.3V K RECT. | チップセラ | | | |
| C462 | **WG888300** | MONOLITHIC CERAMIC CAP(CHIP) | 10.0 6.3V K TP | チップ積層セラコン | | | 01 |
| C462 | **WP882000** | CERAMIC CAPACITOR (CHIP) | 10U 6.3V K RECT. | チップセラ | | | |
| C463 | **WN110600** | MONOLITHIC CERAMIC CAP(CHIP) | 4.700 25V K KAKUTE | チップ積層セラコン | | | 01 |
| C464 | **US625100** | CERAMIC CAPACITOR (CHIP) | 0.100 10V K RECT. | チップセラ（BJ） | | | 01 |
| C466 | **US625100** | CERAMIC CAPACITOR (CHIP) | 0.100 10V K RECT. | チップセラ（BJ） | | | 01 |
| -469 | **US625100** | CERAMIC CAPACITOR (CHIP) | 0.100 10V K RECT. | チップセラ（BJ） | | | 01 |
| C500 | **V8085400** | CERAMIC CAPACITOR (CHIP) | 0.1000 25V K RECT. | チップセラ（B） | | | |
| -503 | **V8085400** | CERAMIC CAPACITOR (CHIP) | 0.1000 25V K RECT. | チップセラ（B） | | | |
| C500 | **WU447000** | CERAMIC CAPACITOR (CHIP) | 0.1000 50V K RECT. | チップセラ（B） | | | |
| -503 | **WU447000** | CERAMIC CAPACITOR (CHIP) | 0.1000 50V K RECT. | チップセラ（B） | | | |
| C505 | **US046100** | CERAMIC CAPACITOR (CHIP) | 1.00 25V K RECT. | チップセラ（B） | | | 01 |
| C510 | **V8085400** | CERAMIC CAPACITOR (CHIP) | 0.1000 25V K RECT. | チップセラ（B） | | | |
| -513 | **V8085400** | CERAMIC CAPACITOR (CHIP) | 0.1000 25V K RECT. | チップセラ（B） | | | |
| C510 | **WU447000** | CERAMIC CAPACITOR (CHIP) | 0.1000 50V K RECT. | チップセラ（B） | | | |
| -513 | **WU447000** | CERAMIC CAPACITOR (CHIP) | 0.1000 50V K RECT. | チップセラ（B） | | | |
| C515 | **V8085400** | CERAMIC CAPACITOR (CHIP) | 0.1000 25V K RECT. | チップセラ（B） | | | |
| -518 | **V8085400** | CERAMIC CAPACITOR (CHIP) | 0.1000 25V K RECT. | チップセラ（B） | | | |
| C515 | **WU447000** | CERAMIC CAPACITOR (CHIP) | 0.1000 50V K RECT. | チップセラ（B） | | | |
| -518 | **WU447000** | CERAMIC CAPACITOR (CHIP) | 0.1000 50V K RECT. | チップセラ（B） | | | |
| C552 | **V8085400** | CERAMIC CAPACITOR (CHIP) | 0.1000 25V K RECT. | チップセラ（B） | | | |
| C552 | **WU447000** | CERAMIC CAPACITOR (CHIP) | 0.1000 50V K RECT. | チップセラ（B） | | | |
| C553 | **V8085400** | CERAMIC CAPACITOR (CHIP) | 0.1000 25V K RECT. | チップセラ（B） | | | |
| C553 | **WU447000** | CERAMIC CAPACITOR (CHIP) | 0.1000 50V K RECT. | チップセラ（B） | | | |
| C555 | **US046100** | CERAMIC CAPACITOR (CHIP) | 1.00 25V K RECT. | チップセラ（B） | | | 01 |
| C560 | **V8085400** | CERAMIC CAPACITOR (CHIP) | 0.1000 25V K RECT. | チップセラ（B） | | | |
| -563 | **V8085400** | CERAMIC CAPACITOR (CHIP) | 0.1000 25V K RECT. | チップセラ（B） | | | |
| C560 | **WU447000** | CERAMIC CAPACITOR (CHIP) | 0.1000 50V K RECT. | チップセラ（B） | | | |
| -563 | **WU447000** | CERAMIC CAPACITOR (CHIP) | 0.1000 50V K RECT. | チップセラ（B） | | | |
| C565 | **V8085400** | CERAMIC CAPACITOR (CHIP) | 0.1000 25V K RECT. | チップセラ（B） | | | |
| -568 | **V8085400** | CERAMIC CAPACITOR (CHIP) | 0.1000 25V K RECT. | チップセラ（B） | | | |
| C565 | **WU447000** | CERAMIC CAPACITOR (CHIP) | 0.1000 50V K RECT. | チップセラ（B） | | | |
| -568 | **WU447000** | CERAMIC CAPACITOR (CHIP) | 0.1000 50V K RECT. | チップセラ（B） | | | |
| CN2 | **VT388500** | CONNECTOR | PH 4P TE | ベース付ポスト | | | |
| CN3 | **WB560500** | CONNECTOR | ZH 10P TE | ベースピン | | | 01 |
| CN100 | **WB560600** | CONNECTOR | ZH 11P TE | ベースピン | | | 02 |
| CN101 | **WB559800** | CONNECTOR | ZH 3P TE | ベースピン | | | 01 |
| CN220 | **WB559900** | CONNECTOR | ZH 4P TE | ベースピン | | | 01 |
| CN222 | **WB560300** | CONNECTOR | ZH 8P TE | ベースピン | | | 01 |
| CN223 | **WB560000** | CONNECTOR | ZH 5P TE | ベースピン | | | 01 |
| CN224 | **VT388800** | CONNECTOR | PH 7P TE | ベース付ポスト | | | |
| CN225 | **WB560100** | CONNECTOR | ZH 6P TE | ベースピン | | | 01 |
| CN226 | **VT388700** | CONNECTOR | PH 6P TE | ベース付ポスト | | | |
| CN227 | **VT388600** | CONNECTOR | PH 5P TE | ベース付ポスト | | | |
| CN401 | **WB560800** | CONNECTOR | ZH 13P TE | ベースピン | | | 02 |
| D400 | **VT332900** | DIODE | 1SS355 TE-17 TP 1A 40V | ダイオード | | | |
| D400 | **WG139300** | DIODE | KDS4148U-RTK/P TE | ダイオード | | | |
| DA220 | **V9424900** | DIODE ARRAY | 1SS372 TE85L | ダイオードアレイ | | | 01 |
| -223 | **V9424900** | DIODE ARRAY | 1SS372 TE85L | ダイオードアレイ | | | 01 |
| DA220 | **WP361700** | DIODE ARRAY | KDR731-RTK/P 0.07A | ダイオードアレイ | | | |
| -223 | **WP361700** | DIODE ARRAY | KDR731-RTK/P 0.07A | ダイオードアレイ | | | |
| IC14 | **X2709A0R** | IC | SN74AHCT245PWR | IC | TRANSCEIVER | | 02 |
| IC14 | **XT744B0R** | IC | TC74VHCT245AFT | IC | | | 02 |
| IC25 | **X4063A00** | IC | TC7WHU04FU | IC | INVERTER | | |
| IC28 | **X2080A00** | IC | SN74AHCT1G32DCKR | IC | OR | | |
| IC28 | **XW814A00** | IC | TC7SET32FU(TE85L,F) | IC | | | 01 |
| IC100 | **--** | IC | R8A02042BG | IC | CPU (SWX08) (YC479A0) | | 20 |
| IC101 | **YD932A00** | IC | RP131H121D-T1-FE | IC | REGULATOR +1.2V | | 01 |
| IC120 | **X4943D00** | IC | W9825G6JH-6 | IC | WORK SDRAM 256M (H) | | 05 |
| IC120 | **X9556C00** | IC | M12L2561616A-6TG2A | IC | | | 04 |

✻: New Parts

RANK: Japan only

## DM

| | REF NO. | PART NO. | DESCRIPTION | | 部品名 | REMARKS | QTY | RANK |
|---|---|---|---|---|---|---|---|---|
| * | IC140 | **YF652F00** | IC | MX29GL256FLT2I-90Q | I C | FLASH ROM 256M PROGRAM | | |
| | IC180 | **X5665D00** | IC | M12L64164A-7TG2Y | I C | DSP SDRAM 64M | | 03 |
| | IC180 | **XZ414F00** | IC | W9864G6JH-6 | I C | | | 03 |
| | IC200 | **YD235A00** | IC | R5524N002A-TR-FE | I C | USB HIGH-SIDE POWER SWITCH | | 02 |
| | IC410 | **YD413A00** | IC | R1190H050B-T1-FE | I C | REGULATOR +5V | | 01 |
| | IC440 | **--** | IC | YSS952-QZE2A | I C | DSP (YE441A0) | | |
| | IC441 | **YF613A00** | IC | RP131H181D-T1-FE | I C | REGULATOR +1.8V | | |
| | IC442 | **X5818A00** | IC | PCA9540BDP | I C | I2C MULTIPLEXER | | |
| | IC443 | **XW633A0R** | IC | TC7SH32FU(TE85L,JF) | I C | OR | | 01 |
| | -445 | **XW633A0R** | IC | TC7SH32FU(TE85L,JF) | I C | OR | | 01 |
| | L5 | **WK139000** | CHIP INDUCTANCE | 600 BK1005HM601-T | チップインダクタ | | | 01 |
| | L6 | **WK139000** | CHIP INDUCTANCE | 600 BK1005HM601-T | チップインダクタ | | | 01 |
| | L100 | **VQ72490R** | CHIP INDUCTANCE | BK212 5HM601-T | チップインダクタ | | | 01 |
| | L101 | **VQ72490R** | CHIP INDUCTANCE | BK212 5HM601-T | チップインダクタ | | | 01 |
| | L102 | **WK139000** | CHIP INDUCTANCE | 600 BK1005HM601-T | チップインダクタ | | | 01 |
| | -112 | **WK139000** | CHIP INDUCTANCE | 600 BK1005HM601-T | チップインダクタ | | | 01 |
| | L222 | **V2747000** | CHIP INDUCTANCE | BLM18PG600SN1 | チップインダクタ | | | |
| | -226 | **V2747000** | CHIP INDUCTANCE | BLM18PG600SN1 | チップインダクタ | | | |
| | L227 | **WK139000** | CHIP INDUCTANCE | 600 BK1005HM601-T | チップインダクタ | | | 01 |
| | -231 | **WK139000** | CHIP INDUCTANCE | 600 BK1005HM601-T | チップインダクタ | | | 01 |
| | L232 | **WE863900** | COMMON MODE COIL | DLP11SN900HL2L | コモンモードコイル | | | 01 |
| | L233 | **WE863900** | COMMON MODE COIL | DLP11SN900HL2L | コモンモードコイル | | | 01 |
| | L234 | **V2747000** | CHIP INDUCTANCE | BLM18PG600SN1 | チップインダクタ | | | |
| | L500 | **WV972000** | CHIP INDUCTANCE | 10.0U CER8065-100M | チップインダクタ | | | 03 |
| | -503 | **WV972000** | CHIP INDUCTANCE | 10.0U CER8065-100M | チップインダクタ | | | 03 |
| | L510 | **WV972000** | CHIP INDUCTANCE | 10.0U CER8065-100M | チップインダクタ | | | 03 |
| | -513 | **WV972000** | CHIP INDUCTANCE | 10.0U CER8065-100M | チップインダクタ | | | 03 |
| | L521 | **ZG078900** | EMI FILTER | NFM31KC223R1H3L | エミフィル チップ | | | |
| | R2 | **RD456100** | CARBON RESISTOR (CHIP) | 1.0K 63M J RECT. | チップ抵抗 | | | |
| | R3 | **RD457100** | CARBON RESISTOR (CHIP) | 10.0K 63M J RECT. | チップ抵抗 | | | |
| | R4 | **RD455100** | CARBON RESISTOR (CHIP) | 100.0 63M J RECT. | チップ抵抗 | | | |
| | R20 | **RD458100** | CARBON RESISTOR (CHIP) | 100.0K 63M J RECT. | チップ抵抗 | | | |
| | R22 | **RD458470** | CARBON RESISTOR (CHIP) | 470.0K 63M J RECT. | チップ抵抗 | | | |
| | R101 | **RD455330** | CARBON RESISTOR (CHIP) | 330.0 63M J RECT. | チップ抵抗 | | | |
| | R102 | **RD454680** | CARBON RESISTOR (CHIP) | 68.0 63M J RECT. | チップ抵抗 | | | 01 |
| | -104 | **RD454680** | CARBON RESISTOR (CHIP) | 68.0 63M J RECT. | チップ抵抗 | | | 01 |
| | R109 | **RD454680** | CARBON RESISTOR (CHIP) | 68.0 63M J RECT. | チップ抵抗 | | | 01 |
| | R113 | **RD454680** | CARBON RESISTOR (CHIP) | 68.0 63M J RECT. | チップ抵抗 | | | 01 |
| | R114 | **RD454680** | CARBON RESISTOR (CHIP) | 68.0 63M J RECT. | チップ抵抗 | | | 01 |
| | R116 | **RD454680** | CARBON RESISTOR (CHIP) | 68.0 63M J RECT. | チップ抵抗 | | | 01 |
| | R119 | **RD454680** | CARBON RESISTOR (CHIP) | 68.0 63M J RECT. | チップ抵抗 | | | 01 |
| | R122 | **RD454470** | CARBON RESISTOR (CHIP) | 47.0 63M J RECT. | チップ抵抗 | | | 01 |
| | R131 | **RD454220** | CARBON RESISTOR (CHIP) | 22.0 63M J RECT. | チップ抵抗 | | | |
| | R133 | **RD454220** | CARBON RESISTOR (CHIP) | 22.0 63M J RECT. | チップ抵抗 | | | |
| | R137 | **RD454220** | CARBON RESISTOR (CHIP) | 22.0 63M J RECT. | チップ抵抗 | | | |
| | -141 | **RD454220** | CARBON RESISTOR (CHIP) | 22.0 63M J RECT. | チップ抵抗 | | | |
| | R144 | **RD454680** | CARBON RESISTOR (CHIP) | 68.0 63M J RECT. | チップ抵抗 | | | 01 |
| | R147 | **RD454680** | CARBON RESISTOR (CHIP) | 68.0 63M J RECT. | チップ抵抗 | | | 01 |
| | R157 | **RD454220** | CARBON RESISTOR (CHIP) | 22.0 63M J RECT. | チップ抵抗 | | | |
| | R164 | **RD454680** | CARBON RESISTOR (CHIP) | 68.0 63M J RECT. | チップ抵抗 | | | 01 |
| | R169 | **RD454680** | CARBON RESISTOR (CHIP) | 68.0 63M J RECT. | チップ抵抗 | | | 01 |
| | -171 | **RD454680** | CARBON RESISTOR (CHIP) | 68.0 63M J RECT. | チップ抵抗 | | | 01 |
| | R178 | **RD454680** | CARBON RESISTOR (CHIP) | 68.0 63M J RECT. | チップ抵抗 | | | 01 |
| | R179 | **RD454680** | CARBON RESISTOR (CHIP) | 68.0 63M J RECT. | チップ抵抗 | | | 01 |
| | R188 | **RD454220** | CARBON RESISTOR (CHIP) | 22.0 63M J RECT. | チップ抵抗 | | | |
| | R192 | **RD457100** | CARBON RESISTOR (CHIP) | 10.0K 63M J RECT. | チップ抵抗 | | | |
| | R194 | **RD454680** | CARBON RESISTOR (CHIP) | 68.0 63M J RECT. | チップ抵抗 | | | 01 |
| | R220 | **RD457100** | CARBON RESISTOR (CHIP) | 10.0K 63M J RECT. | チップ抵抗 | | | |
| | R225 | **RD454680** | CARBON RESISTOR (CHIP) | 68.0 63M J RECT. | チップ抵抗 | | | 01 |
| | R228 | **RA154220** | METAL FILM RESISTOR (CHIP) | 22.0 63M D RECT. | チップ金被抵抗 | | | |
| | -231 | **RA154220** | METAL FILM RESISTOR (CHIP) | 22.0 63M D RECT. | チップ金被抵抗 | | | |
| | R232 | **RD456100** | CARBON RESISTOR (CHIP) | 1.0K 63M J RECT. | チップ抵抗 | | | |
| | R248 | **RD458470** | CARBON RESISTOR (CHIP) | 470.0K 63M J RECT. | チップ抵抗 | | | |
| | R252 | **RD457100** | CARBON RESISTOR (CHIP) | 10.0K 63M J RECT. | チップ抵抗 | | | |
| | R253 | **RD456100** | CARBON RESISTOR (CHIP) | 1.0K 63M J RECT. | チップ抵抗 | | | |
| | R255 | **RD457100** | CARBON RESISTOR (CHIP) | 10.0K 63M J RECT. | チップ抵抗 | | | |
| | R256 | **RD457100** | CARBON RESISTOR (CHIP) | 10.0K 63M J RECT. | チップ抵抗 | | | |
| | R258 | **RD456220** | CARBON RESISTOR (CHIP) | 2.2K 63M J RECT. | チップ抵抗 | | | |
| | -262 | **RD456220** | CARBON RESISTOR (CHIP) | 2.2K 63M J RECT. | チップ抵抗 | | | |
| | R265 | **RD45615R** | CARBON RESISTOR (CHIP) | 1.5K 63M J RECT. | チップ抵抗 | | | 01 |

*: New Parts

RANK: Japan only

## DM

| REF NO. | PART NO. | DESCRIPTION | | 部品名 | REMARKS | QTY | RANK |
|---|---|---|---|---|---|---|---|
| R272 | **RD457150** | CARBON RESISTOR (CHIP) | 15.0K 63M J RECT. | チップ抵抗 | | | 01 |
| R276 | **RD457150** | CARBON RESISTOR (CHIP) | 15.0K 63M J RECT. | チップ抵抗 | | | 01 |
| R277 | **RD45615R** | CARBON RESISTOR (CHIP) | 1.5K 63M J RECT. | チップ抵抗 | | | 01 |
| R278 | **RD455100** | CARBON RESISTOR (CHIP) | 100.0 63M J RECT. | チップ抵抗 | | | |
| R282 | **RD454680** | CARBON RESISTOR (CHIP) | 68.0 63M J RECT. | チップ抵抗 | | | 01 |
| -285 | **RD454680** | CARBON RESISTOR (CHIP) | 68.0 63M J RECT. | チップ抵抗 | | | 01 |
| R286 | **RD454330** | CARBON RESISTOR (CHIP) | 33.0 63M J RECT. | チップ抵抗 | | | |
| R287 | **RD454680** | CARBON RESISTOR (CHIP) | 68.0 63M J RECT. | チップ抵抗 | | | 01 |
| R402 | **RD45000R** | CARBON RESISTOR (CHIP) | 0.00 63M J RECT. | チップ抵抗 | | | 01 |
| R403 | **RD45000R** | CARBON RESISTOR (CHIP) | 0.00 63M J RECT. | チップ抵抗 | | | 01 |
| R414 | **RD45615R** | CARBON RESISTOR (CHIP) | 1.5K 63M J RECT. | チップ抵抗 | | | 01 |
| -417 | **RD45615R** | CARBON RESISTOR (CHIP) | 1.5K 63M J RECT. | チップ抵抗 | | | 01 |
| R418 | **RD45747R** | CARBON RESISTOR (CHIP) | 47.0K 63M J RECT. | チップ抵抗 | | | 01 |
| R439 | **RD45615R** | CARBON RESISTOR (CHIP) | 1.5K 63M J RECT. | チップ抵抗 | | | 01 |
| R440 | **RD459100** | CARBON RESISTOR (CHIP) | 1.0M 63M J RECT. | チップ抵抗 | | | |
| R446 | **RD456470** | CARBON RESISTOR (CHIP) | 4.7K 63M J RECT. | チップ抵抗 | | | |
| R447 | **RD456470** | CARBON RESISTOR (CHIP) | 4.7K 63M J RECT. | チップ抵抗 | | | |
| R450 | **RD457100** | CARBON RESISTOR (CHIP) | 10.0K 63M J RECT. | チップ抵抗 | | | |
| R451 | **RD457100** | CARBON RESISTOR (CHIP) | 10.0K 63M J RECT. | チップ抵抗 | | | |
| R452 | **RD454680** | CARBON RESISTOR (CHIP) | 68.0 63M J RECT. | チップ抵抗 | | | 01 |
| -456 | **RD454680** | CARBON RESISTOR (CHIP) | 68.0 63M J RECT. | チップ抵抗 | | | 01 |
| R461 | **RD454680** | CARBON RESISTOR (CHIP) | 68.0 63M J RECT. | チップ抵抗 | | | 01 |
| R463 | **RD454680** | CARBON RESISTOR (CHIP) | 68.0 63M J RECT. | チップ抵抗 | | | 01 |
| R464 | **RD454680** | CARBON RESISTOR (CHIP) | 68.0 63M J RECT. | チップ抵抗 | | | 01 |
| R467 | **RD45000R** | CARBON RESISTOR (CHIP) | 0.00 63M J RECT. | チップ抵抗 | | | 01 |
| R470 | **RD45000R** | CARBON RESISTOR (CHIP) | 0.00 63M J RECT. | チップ抵抗 | | | 01 |
| R500 | **RD253100** | CARBON RESISTOR (CHIP) | 1.0 0.1 J RECT. | チップ抵抗 | | | |
| R505 | **RD45000R** | CARBON RESISTOR (CHIP) | 0.00 63M J RECT. | チップ抵抗 | | | 01 |
| R507 | **RD455100** | CARBON RESISTOR (CHIP) | 100.0 63M J RECT. | チップ抵抗 | | | |
| R508 | **RD455100** | CARBON RESISTOR (CHIP) | 100.0 63M J RECT. | チップ抵抗 | | | |
| R510 | **RD253100** | CARBON RESISTOR (CHIP) | 1.0 0.1 J RECT. | チップ抵抗 | | | |
| R514 | **RD45000R** | CARBON RESISTOR (CHIP) | 0.00 63M J RECT. | チップ抵抗 | | | 01 |
| R517 | **RD455100** | CARBON RESISTOR (CHIP) | 100.0 63M J RECT. | チップ抵抗 | | | |
| R518 | **RD455100** | CARBON RESISTOR (CHIP) | 100.0 63M J RECT. | チップ抵抗 | | | |
| R521 | **RD454470** | CARBON RESISTOR (CHIP) | 47.0 63M J RECT. | チップ抵抗 | | | 01 |
| -526 | **RD454470** | CARBON RESISTOR (CHIP) | 47.0 63M J RECT. | チップ抵抗 | | | 01 |
| R529 | **RD45000R** | CARBON RESISTOR (CHIP) | 0.00 63M J RECT. | チップ抵抗 | | | 01 |
| RA100 | **WH206200** | RESISTOR ARRAY | 47 X 4 | 抵抗アレイ | | | 01 |
| -107 | **WH206200** | RESISTOR ARRAY | 47 X 4 | 抵抗アレイ | | | 01 |
| RA108 | **WH205400** | RESISTOR ARRAY | 22 X 4 | 抵抗アレイ | | | 01 |
| -113 | **WH205400** | RESISTOR ARRAY | 22 X 4 | 抵抗アレイ | | | 01 |
| RA114 | **WH211800** | RESISTOR ARRAY | 10K X 4 | 抵抗アレイ | | | 01 |
| RA117 | **WH209400** | RESISTOR ARRAY | 1.0K X 4 | 抵抗アレイ | | | |
| RA118 | **WH206200** | RESISTOR ARRAY | 47 X 4 | 抵抗アレイ | | | 01 |
| RA119 | **WH206200** | RESISTOR ARRAY | 47 X 4 | 抵抗アレイ | | | 01 |
| RA122 | **WH205400** | RESISTOR ARRAY | 22 X 4 | 抵抗アレイ | | | 01 |
| RA123 | **WH205400** | RESISTOR ARRAY | 22 X 4 | 抵抗アレイ | | | 01 |
| RA128 | **WH205400** | RESISTOR ARRAY | 22 X 4 | 抵抗アレイ | | | 01 |
| RA130 | **WH205400** | RESISTOR ARRAY | 22 X 4 | 抵抗アレイ | | | 01 |
| RA131 | **WH206200** | RESISTOR ARRAY | 47 X 4 | 抵抗アレイ | | | 01 |
| RA132 | **WH206200** | RESISTOR ARRAY | 47 X 4 | 抵抗アレイ | | | 01 |
| RA155 | **WH206600** | RESISTOR ARRAY | 68 X 4 | 抵抗アレイ | | | 01 |
| -159 | **WH206600** | RESISTOR ARRAY | 68 X 4 | 抵抗アレイ | | | 01 |
| RA163 | **WH206600** | RESISTOR ARRAY | 68 X 4 | 抵抗アレイ | | | 01 |
| RA164 | **WH206600** | RESISTOR ARRAY | 68 X 4 | 抵抗アレイ | | | 01 |
| RA166 | **WH206600** | RESISTOR ARRAY | 68 X 4 | 抵抗アレイ | | | 01 |
| -169 | **WH206600** | RESISTOR ARRAY | 68 X 4 | 抵抗アレイ | | | 01 |
| RA175 | **WH206600** | RESISTOR ARRAY | 68 X 4 | 抵抗アレイ | | | 01 |
| RA176 | **WH206600** | RESISTOR ARRAY | 68 X 4 | 抵抗アレイ | | | 01 |
| RA180 | **WH206600** | RESISTOR ARRAY | 68 X 4 | 抵抗アレイ | | | 01 |
| RA181 | **WH206600** | RESISTOR ARRAY | 68 X 4 | 抵抗アレイ | | | 01 |
| RA182 | **WH206200** | RESISTOR ARRAY | 47 X 4 | 抵抗アレイ | | | 01 |
| -185 | **WH206200** | RESISTOR ARRAY | 47 X 4 | 抵抗アレイ | | | 01 |
| RA221 | **WH206600** | RESISTOR ARRAY | 68 X 4 | 抵抗アレイ | | | 01 |
| RA222 | **WH206600** | RESISTOR ARRAY | 68 X 4 | 抵抗アレイ | | | 01 |
| SW100 | **V302690R** | SWITCH | CHS-01 TA1 | ジャンパーSW | | | 02 |
| SW101 | **V302690R** | SWITCH | CHS-01 TA1 | ジャンパーSW | | | 02 |
| SW103 | **V302690R** | SWITCH | CHS-01 TA1 | ジャンパーSW | | | 02 |
| TR220 | **VY67770R** | DIGITAL TRANSISTOR | DTB123YK T146 | デジタルトランジスタ | | | 01 |
| -223 | **VY67770R** | DIGITAL TRANSISTOR | DTB123YK T146 | デジタルトランジスタ | | | 01 |

✻: New Parts

RANK: Japan only

## DM and FU and LCD and MK-H/MK-L/MK-M

| REF NO. | PART NO. | DESCRIPTION | | 部品名 | REMARKS | QTY | RANK |
|---|---|---|---|---|---|---|---|
| TR220 | **WG989900** | DIGITAL TRANSISTOR | KRA226S-RTK/P | デジタルトランジスタ | | | 01 |
| -223 | **WG989900** | DIGITAL TRANSISTOR | KRA226S-RTK/P | デジタルトランジスタ | | | 01 |
| TR228 | **WW782200** | DIGITAL TRANSISTOR | DTC023JUBTL | デジタルトランジスタ | | | 01 |
| TR229 | **WG989900** | DIGITAL TRANSISTOR | KRA226S-RTK/P | デジタルトランジスタ | | | 01 |
| X100 | **WM135200** | RESONATOR QUARTZ | 16.9344MHz DSX321G | 水晶振動子 | | | |
| X400 | **WM284900** | QUARTZ CRYSTAL UNIT | 22.5792MHz DSX321G | 水晶振動子 | | | 02 |
| | | | | | | | |
| | **--** | CIRCUIT BOARD | FU | FUシート | (ZJ05460)(X9604B0) (ZJ05450) | | |
| C1 | **--** | JUMPER WIRE | 0.55 | ジャンパー線 | (VA07890) | | |
| CN2 | **LB93206R** | CONNECTOR | VH 6P TE | ベースポスト | | | 01 |
| ⚠ F1 | **KB003240** | FUSE | TL 5.00A S 250V | ヒューズ250V | | | |
| FUHOL | **WQ778800** | FUSE HOLDER | PIN TP00526-31 | ヒューズホルダ | | 2 | 01 |
| FUHOL | **--** | FUSE HOLDER | PIN HF-004/PT | ヒューズホルダ | (ZJ08480) | 2 | |
| ⚠ INLET | **VT30810R** | AC INLET | 2P CCT9302-0101 | ACインレット 2P | | | 02 |
| ⚠ INLET | **WH965200** | AC INLET | 2P CCT9302-0102 | ACインレット 2P | | | |
| L1 | **--** | JUMPER WIRE | 0.55 | ジャンパー線 | (VA07890) | | |
| L2 | **--** | JUMPER WIRE | 0.55 | ジャンパー線 | (VA07890) | | |
| L3 | **--** | JUMPER WIRE | 0.55 | ジャンパー線 | (VA07890) | | |
| | | | | | | | |
| | **ZG425800** | CIRCUIT BOARD | LCD | LCDシート | (ZG85900)(YF544B0) | | |
| | **RD150000** | CARBON RESISTOR (CHIP) | 0.0 1/4 J TP | チップ抵抗 | | 5 | |
| C1 | **WP382600** | MONOLITHIC CERAMIC CAP(CHIP) | 1.000 25V K RECT. | チップ積層セラコン | | | |
| -10 | **WP382600** | MONOLITHIC CERAMIC CAP(CHIP) | 1.000 25V K RECT. | チップ積層セラコン | | | |
| C30 | **WF547900** | CERAMIC CAPACITOR (CHIP) | 10.000 25V K KAKUT | チップセラ | | | 01 |
| C30 | **WG888200** | MONOLITHIC CERAMIC CAP(CHIP) | 10.0 25V K TP | チップ積層セラコン | | | |
| C31 | **WF547900** | CERAMIC CAPACITOR (CHIP) | 10.000 25V K KAKUT | チップセラ | | | 01 |
| C31 | **WG888200** | MONOLITHIC CERAMIC CAP(CHIP) | 10.0 25V K TP | チップ積層セラコン | | | |
| C100 | **US635100** | CERAMIC CAPACITOR (CHIP) | 0.100 16V Z RECT. | チップセラ(F) | | | |
| C101 | **US635100** | CERAMIC CAPACITOR (CHIP) | 0.100 16V Z RECT. | チップセラ(F) | | | |
| CN1 | **ZG851500** | FFC CONNECTOR | 52559 40P TE | FFCコネクタ | | | |
| CN2 | **WK227400** | CONNECTOR | PH 14P SE | ベース付ポスト | | | 02 |
| R1 | **RD357100** | CARBON RESISTOR (CHIP) | 10.0K 63M J RECT. | チップ抵抗 | | | |
| -4 | **RD357100** | CARBON RESISTOR (CHIP) | 10.0K 63M J RECT. | チップ抵抗 | | | |
| R5 | **RD150000** | CARBON RESISTOR (CHIP) | 0.0 1/4 J TP | チップ抵抗 | | | |
| -12 | **RD150000** | CARBON RESISTOR (CHIP) | 0.0 1/4 J TP | チップ抵抗 | | | |
| R32 | **RD15518R** | CARBON RESISTOR (CHIP) | 180.0 1/4 J TP | チップ抵抗 | | | 01 |
| | | | | | | | |
| | **WV760600** | CIRCUIT BOARD | MK-H | MKーHシート | (WV35460)(YC333D0) | | 11 |
| | **WV760400** | CIRCUIT BOARD | MK-L | MKーLシート | (WV35460)(YC333D0) | | 11 |
| | **WV760500** | CIRCUIT BOARD | MK-M | MKーMシート | (WV35460)(YC333D0) | | 11 |
| C1 | **UF037100** | ELECTROLYTIC CAPACITOR(CHIP) | 10 16V | チップケミコン | | | |
| C2 | **US635100** | CERAMIC CAPACITOR (CHIP) | 0.100 16V Z RECT. | チップセラ(F) | | | |
| C10 | **US663100** | CERAMIC CAPACITOR (CHIP) | 1000P 50V K RECT. | チップセラ(B) | | | 01 |
| C13 | **US635100** | CERAMIC CAPACITOR (CHIP) | 0.100 16V Z RECT. | チップセラ(F) | | | |
| C14 | **US635100** | CERAMIC CAPACITOR (CHIP) | 0.100 16V Z RECT. | チップセラ(F) | | | |
| C15 | **US662100** | CERAMIC CAPACITOR (CHIP) | 100P 50V J RECT. | チップセラ(CH) | | | |
| -25 | **US662100** | CERAMIC CAPACITOR (CHIP) | 100P 50V J RECT. | チップセラ(CH) | | | |
| C34 | **US662100** | CERAMIC CAPACITOR (CHIP) | 100P 50V J RECT. | チップセラ(CH) | | | |
| -37 | **US662100** | CERAMIC CAPACITOR (CHIP) | 100P 50V J RECT. | チップセラ(CH) | | | |
| C50 | **US635100** | CERAMIC CAPACITOR (CHIP) | 0.100 16V Z RECT. | チップセラ(F) | | | |
| C51 | **US635100** | CERAMIC CAPACITOR (CHIP) | 0.100 16V Z RECT. | チップセラ(F) | | | |
| CN1 | **VK025600** | WIRE TRAP | 52147 12P TE | ワイヤートラップ | | | |
| CN2 | **VK025501** | WIRE TRAP | 52147 11P TE | ワイヤートラップ | | | 01 |
| CN3 | **VB39030R** | CONNECTOR | PH 7P TE | ベースポスト | | | 01 |
| CN6 | **VK025600** | WIRE TRAP | 52147 12P TE | ワイヤートラップ | | | |
| CN7 | **VK025501** | WIRE TRAP | 52147 11P TE | ワイヤートラップ | | | 01 |
| CN101 | **VK025600** | WIRE TRAP | 52147 12P TE | ワイヤートラップ | | | |
| CN102 | **VK025501** | WIRE TRAP | 52147 11P TE | ワイヤートラップ | | | 01 |
| CN201 | **VK025600** | WIRE TRAP | 52147 12P TE | ワイヤートラップ | | | |
| CN202 | **VK025501** | WIRE TRAP | 52147 11P TE | ワイヤートラップ | | | 01 |
| D1 | **V9599200** | DIODE | HSU119 TRF-E | チップダイオード | | | |
| -96 | **V9599200** | DIODE | HSU119 TRF-E | チップダイオード | | | |
| D1 | **VT332900** | DIODE | 1SS355 TE-17 TP 1A 40V | ダイオード | | | |
| -96 | **VT332900** | DIODE | 1SS355 TE-17 TP 1A 40V | ダイオード | | | |
| D1 | **WG139300** | DIODE | KDS4148U-RTK/P TE | ダイオード | | | |
| -96 | **WG139300** | DIODE | KDS4148U-RTK/P TE | ダイオード | | | |
| D99 | **V9599200** | DIODE | HSU119 TRF-E | チップダイオード | | | |
| -184 | **V9599200** | DIODE | HSU119 TRF-E | チップダイオード | | | |
| D99 | **VT332900** | DIODE | 1SS355 TE-17 TP 1A 40V | ダイオード | | | |
| -184 | **VT332900** | DIODE | 1SS355 TE-17 TP 1A 40V | ダイオード | | | |

✻: New Parts

RANK: Japan only

## MK-H/MK-L/MK-M and PEDAL and PL and PNL/PSW/VR

| REF NO. | PART NO. | DESCRIPTION | | 部品名 | REMARKS | QTY | RANK |
|---|---|---|---|---|---|---|---|
| D99 | **WG139300** | DIODE | KDS4148U-RTK/P TE | ダイオード | | | |
| -184 | **WG139300** | DIODE | KDS4148U-RTK/P TE | ダイオード | | | |
| D201 | **V9599200** | DIODE | HSU119 TRF-E | チップダイオード | | | |
| -290 | **V9599200** | DIODE | HSU119 TRF-E | チップダイオード | | | |
| D201 | **VT332900** | DIODE | 1SS355 TE-17 TP 1A 40V | ダイオード | | | |
| -290 | **VT332900** | DIODE | 1SS355 TE-17 TP 1A 40V | ダイオード | | | |
| D201 | **WG139300** | DIODE | KDS4148U-RTK/P TE | ダイオード | | | |
| -290 | **WG139300** | DIODE | KDS4148U-RTK/P TE | ダイオード | | | |
| IC1 | **YC778C00** | IC | TMP89FM42AUG-7GP2(JZ) | IC | E-GKS | | 05 |
| L1 | **V2747000** | CHIP INDUCTANCE | BLM18PG600SN1 | チップインダクタ | | | |
| R5 | **RD454470** | CARBON RESISTOR (CHIP) | 47.0 63M J RECT. | チップ抵抗 | | | 01 |
| R6 | **RD454470** | CARBON RESISTOR (CHIP) | 47.0 63M J RECT. | チップ抵抗 | | | 01 |
| R7 | **RD456100** | CARBON RESISTOR (CHIP) | 1.0K 63M J RECT. | チップ抵抗 | | | |
| R17 | **RD457100** | CARBON RESISTOR (CHIP) | 10.0K 63M J RECT. | チップ抵抗 | | | |
| R18 | **RD457220** | CARBON RESISTOR (CHIP) | 22.0K 63M J RECT. | チップ抵抗 | | | 01 |
| R19 | **RD457220** | CARBON RESISTOR (CHIP) | 22.0K 63M J RECT. | チップ抵抗 | | | 01 |
| R20 | **RD457100** | CARBON RESISTOR (CHIP) | 10.0K 63M J RECT. | チップ抵抗 | | | |
| R25 | **RD45000R** | CARBON RESISTOR (CHIP) | 0.00 63M J RECT. | チップ抵抗 | | | 01 |
| RA1 | **WH212600** | RESISTOR ARRAY | 22K X 4 | 抵抗アレイ | | | 01 |
| -4 | **WH212600** | RESISTOR ARRAY | 22K X 4 | 抵抗アレイ | | | 01 |
| X1 | **V9864200** | CERAMIC RESONATOR | 10.0MHz CSTCE10M0G52 | セラミック発振子 | | | |
| | | | | | | | |
| | **WP029200** | CIRCUIT BOARD | PEDAL | PEDALシート | (WQ65870)(X9561D0) | | 05 |
| CN1 | **VB858500** | CONNECTOR | PH 6P SE | ベーストポスト | | | |
| VR1 | **WN154400** | ROTARY VARIABLE RESISTOR | B 10.0K RK09Y11L00 | ロータリーVR1連 | DAMPER pedal | | 03 |
| | | | | | | | |
| | **--** | CIRCUIT BOARD | PL | PLシート | (ZJ12410)(XR898A0) (ZJ08790) | | |
| CN1 | **--** | CONNECTOR | PH 2P TE | ベーストポスト | (VB38980) | | |
| LED1 | **WM285600** | LED RED | HFR223P-BW12 | LED | POWER indicator | | 01 |
| | | | | | | | |
| | **ZG462000** | CIRCUIT BOARD | PNL | PNLシート | (ZG46220)(YF555D0) | | |
| | **ZH423800** | CIRCUIT BOARD | PSW | PSWシート | (ZG46220)(YF555D0) | | |
| | **ZG462100** | CIRCUIT BOARD | VR | VRシート | (ZG46220)(YF555D0) | | |
| CN1 | **VK015400** | CONNECTOR | PH 13P SE | ベーストポスト | | | |
| CN100 | **VB858400** | CONNECTOR | PH 5P SE | ベーストポスト | | | |
| CN101 | **VB858100** | CONNECTOR | PH 2P SE | ベーストポスト | | | |
| VR100 | **VK368701** | SLIDE VARIABLE RESISTOR | B10K RS30111A9 | スライドVR | MASTER VOLUME | | 03 |
| | **RD150000** | CARBON RESISTOR (CHIP) | 0.0 1/4 J TP | チップ抵抗 | | 19 | |
| D1 | **VT332900** | DIODE | 1SS355 TE-17 TP 1A 40V | ダイオード | | | |
| -20 | **VT332900** | DIODE | 1SS355 TE-17 TP 1A 40V | ダイオード | | | |
| D1 | **WG139300** | DIODE | KDS4148U-RTK/P TE | ダイオード | | | |
| -20 | **WG139300** | DIODE | KDS4148U-RTK/P TE | ダイオード | | | |
| R1 | **RD155120** | CARBON RESISTOR (CHIP) | 120.0 1/4 J TP | チップ抵抗 | | | |
| R2 | **RD15468R** | CARBON RESISTOR (CHIP) | 68.0 1/4 J TP | チップ抵抗 | | | 01 |
| R3 | **RD155120** | CARBON RESISTOR (CHIP) | 120.0 1/4 J TP | チップ抵抗 | | | |
| R13 | **RD15468R** | CARBON RESISTOR (CHIP) | 68.0 1/4 J TP | チップ抵抗 | | | 01 |
| R14 | **RD155120** | CARBON RESISTOR (CHIP) | 120.0 1/4 J TP | チップ抵抗 | | | |
| LD8 | **WE864300** | LED RED | SLR-343VCT32 | LED | PLAY/PAUSE | | 01 |
| LD10 | **WE864300** | LED RED | SLR-343VCT32 | LED | REC | | 01 |
| LD13 | **V8066800** | LED RED/GREEN | SML72423C TP15 | LED2色 | DUAL/SPLIT | | 01 |
| LD14 | **WE864300** | LED RED | SLR-343VCT32 | LED | METRONOME | | 01 |
| LD15 | **WE864300** | LED RED | SLR-343VCT32 | LED | ORGAN | | 01 |
| LD16 | **WE864300** | LED RED | SLR-343VCT32 | LED | E.PIANO | | 01 |
| LD17 | **WE864300** | LED RED | SLR-343VCT32 | LED | PIANO | | 01 |
| LD18 | **WE864300** | LED RED | SLR-343VCT32 | LED | OTHERS | | 01 |
| LD19 | **WE864300** | LED RED | SLR-343VCT32 | LED | BASS | | 01 |
| LD20 | **WE864300** | LED RED | SLR-343VCT32 | LED | STRINGS | | 01 |
| SW1 | **WG31840R** | TACT SWITCH | SKRGAMD010 | タクトSW | VOICE | | 01 |
| SW2 | **WG31840R** | TACT SWITCH | SKRGAMD010 | タクトSW | SONG | | 01 |
| SW3 | **WG31840R** | TACT SWITCH | SKRGAMD010 | タクトSW | DEMO | | 01 |
| SW4 | **WG31840R** | TACT SWITCH | SKRGAMD010 | タクトSW | LEFT | | 01 |
| SW5 | **WG31840R** | TACT SWITCH | SKRGAMD010 | タクトSW | DOWN | | 01 |
| SW6 | **WG31840R** | TACT SWITCH | SKRGAMD010 | タクトSW | UP | | 01 |
| SW7 | **WG31840R** | TACT SWITCH | SKRGAMD010 | タクトSW | RIGHT | | 01 |
| SW8 | **WG31840R** | TACT SWITCH | SKRGAMD010 | タクトSW | PLAY/PAUSE | | 01 |
| SW9 | **WG31840R** | TACT SWITCH | SKRGAMD010 | タクトSW | STOP | | 01 |
| SW10 | **WG31840R** | TACT SWITCH | SKRGAMD010 | タクトSW | REC | | 01 |
| SW11 | **WG31840R** | TACT SWITCH | SKRGAMD010 | タクトSW | MENU | | 01 |
| SW12 | **WG31840R** | TACT SWITCH | SKRGAMD010 | タクトSW | EXIT | | 01 |
| SW13 | **WG31840R** | TACT SWITCH | SKRGAMD010 | タクトSW | DUAL/SPLIT | | 01 |

✻: New Parts

RANK: Japan only

## PNL/PSW/VR and PS

| REF NO. | PART NO. | DESCRIPTION | | 部品名 | REMARKS | QTY | RANK |
|---|---|---|---|---|---|---|---|
| SW14 | **WG31840R** | TACT SWITCH | SKRGAMD010 | タクトSW | METRONOME | | 01 |
| SW15 | **WG31840R** | TACT SWITCH | SKRGAMD010 | タクトSW | ORGAN | | 01 |
| SW16 | **WG31840R** | TACT SWITCH | SKRGAMD010 | タクトSW | E.PIANO | | 01 |
| SW17 | **WG31840R** | TACT SWITCH | SKRGAMD010 | タクトSW | PIANO | | 01 |
| SW18 | **WG31840R** | TACT SWITCH | SKRGAMD010 | タクトSW | OTHERS | | 01 |
| SW19 | **WG31840R** | TACT SWITCH | SKRGAMD010 | タクトSW | BASS | | 01 |
| SW20 | **WG31840R** | TACT SWITCH | SKRGAMD010 | タクトSW | STRINGS | | 01 |
| SW100 | **WG31840R** | TACT SWITCH | SKRGAMD010 | タクトSW | STANDBY/ON | | 01 |
| | | | | | | | |
| | **ZJ436200** | CIRCUIT BOARD | PS | PSシート | (ZJ43610)(YF524E0) | | |
| | **WE97210R** | BIND HEAD TAPPING SCREW-S | 3.0X8 MFZN2W3 | Sタイト+BIND | | 5 | 01 |
| ⚠ C1 | **V9365100** | CAPACITOR | 1.000 275V UCS | 規格認定コン | | | 03 |
| ⚠ C2 | **V9365100** | CAPACITOR | 1.000 275V UCS | 規格認定コン | | | 03 |
| C3 | **ZH028000** | ELECTROLYTIC CAPACITOR | 180.00 450.0V TATE | ケミコン | | | |
| ⚠ C13 | **ZH376900** | CAPACITOR | 220P 250V J,U,C,S | 規格認定コンKX | | | |
| C18 | **ZH027300** | ELECTROLYTIC CAPACITOR | 1000.0 25.0V TATET | ケミコンKY | | | |
| C23 | **ZH027300** | ELECTROLYTIC CAPACITOR | 1000.0 25.0V TATET | ケミコンKY | | | |
| C24 | **ZH027300** | ELECTROLYTIC CAPACITOR | 1000.0 25.0V TATET | ケミコンKY | | | |
| ⚠ C35 | **ZG835700** | CAPACITOR | 0.010 250V UL.SEMK | 規格認定コンKY | | | 01 |
| C44 | **ZJ047600** | MONOLITHIC CERAMIC CAPACITOR | 1.000 250V K TATET | 積層セラコン | | | |
| C45 | **ZJ047600** | MONOLITHIC CERAMIC CAPACITOR | 1.000 250V K TATET | 積層セラコン | | | |
| ⚠ C48 | **ZH376900** | CAPACITOR | 220P 250V J,U,C,S | 規格認定コンKX | | | |
| ⚠ C51 | **ZH376900** | CAPACITOR | 220P 250V J,U,C,S | 規格認定コンKX | | | |
| ⚠ C52 | **ZH376900** | CAPACITOR | 220P 250V J,U,C,S | 規格認定コンKX | | | |
| CN1 | **LB93203R** | CONNECTOR | VH 3P TE | ベースポスト | | | 01 |
| CN3 | **LB93204R** | CONNECTOR | VH 4P TE | ベースポスト | | | 01 |
| CN4 | **LB918020** | CONNECTOR | XH 2P TE | ベーススツキポスト | | | |
| CN5 | **VB389900** | CONNECTOR | PH 3P TE | ベースポスト | | | |
| CN6 | **VB390000** | CONNECTOR | PH 4P TE | ベースポスト | | | |
| ⚠ D2 | **ZG984800** | DIODE | SARS10 | ダイオード | | | |
| DA1 | **ZG396500** | DIODE STACK | FMKS-2152 15.0A 200V | Diスタック | | | |
| DB1 | **WU253200** | DIODE STACK | D3SBA60-7101 2.3A | Diスタック | | | 02 |
| FT1 | **ZJ046900** | POWER FET | FMV09N70E ST | FET | | | |
| FT2 | **ZM561000** | POWER FET | IRF5305PBF | FET | | | |
| ⚠ FUSE | **KB003240** | FUSE | TL 5.00A S 250V | ヒューズ250V | | | |
| ⚠ IC2 | **WP388200** | PHOTO COUPLER | TLP781(D4-GR,F) | フォトカプラ | | | 01 |
| IC3 | **YF557A00** | IC | NJM431D | IC | REGULATOR +18V | | |
| IC4 | **XJ602A00** | IC | NJM78M12FA | IC | REGULATOR +12V 0.5A | | |
| K3 | **--** | RADIATOR | OSH-2025-SF | ラジエータ | (VJ56430) | | |
| K4 | **--** | HEAT SINK | OSH-1025-SFL | ヒートシンク | (VK50950) | | |
| K6 | **--** | EYELET TERMINAL | D3.5 TP00385 TP | アース端子 | (VR46340) | | |
| -8 | **--** | EYELET TERMINAL | D3.5 TP00385 TP | アース端子 | (VR46340) | | |
| ⚠ L1 | **ZH028100** | COIL | EM-ET2424-0012 TAT | コイル | | | |
| ⚠ L2 | **ZH028100** | COIL | EM-ET2424-0012 TAT | コイル | | | |
| L7 | **ZH029100** | INDUCTORS | 7313NC-100M-RA TAT | インダクタ | | | |
| R9 | **VC76510R** | METAL OXIDE FILM RESISTOR | 33.0K 2W J | 酸化金属被膜抵抗 | | | 01 |
| ⚠ T2 | **YF526A00** | POWER TRANSFORMER | UL CSA CE DENAN E | 電源トランス | | | |
| TH1 | **WY800200** | THERMISTOR | NTPAA2R2LDNB0 2.2 | サーミスタ | | | |
| TH2 | **WH323900** | THERMISTOR | PTMS2331RP616Y P6 | サーミスタ | | | |
| C4 | **US061100** | CERAMIC CAPACITOR (CHIP) | 10P 50V D RECT. | チップセラ(CH) | | | |
| C5 | **V754500R** | MONOLITHIC CERAMIC CAP(CHIP) | 0.022 250V K RECT. | チップ積層セラコン | | | 01 |
| C6 | **V754500R** | MONOLITHIC CERAMIC CAP(CHIP) | 0.022 250V K RECT. | チップ積層セラコン | | | 01 |
| C7 | **US064100** | CERAMIC CAPACITOR (CHIP) | 0.0100 50V K RECT. | チップセラ(B) | | | |
| C8 | **US063100** | CERAMIC CAPACITOR (CHIP) | 1000P 50V K RECT. | チップセラ(B) | | | |
| C10 | **US065100** | CERAMIC CAPACITOR (CHIP) | 0.100 50V Z RECT. | チップセラF | | | |
| C14 | **WJ835000** | MONOLITHIC CERAMIC CAP(CHIP) | 1000P 250V K KAKUT | チップ積層セラコン | | | 01 |
| C16 | **US062220** | CERAMIC CAPACITOR (CHIP) | 220P 50V J RECT. | チップセラ(SL) | | | |
| C17 | **US035100** | CERAMIC CAPACITOR (CHIP) | 0.1000 16V K RECT. | チップセラ(B) | | | |
| C20 | **US064100** | CERAMIC CAPACITOR (CHIP) | 0.0100 50V K RECT. | チップセラ(B) | | | |
| C21 | **WN987600** | MONOLITHIC CERAMIC CAP(CHIP) | 1.000 50V K TP | チップ積層セラコン | | | 01 |
| C25 | **WN987600** | MONOLITHIC CERAMIC CAP(CHIP) | 1.000 50V K TP | チップ積層セラコン | | | 01 |
| C26 | **WN987600** | MONOLITHIC CERAMIC CAP(CHIP) | 1.000 50V K TP | チップ積層セラコン | | | 01 |
| C27 | **US065100** | CERAMIC CAPACITOR (CHIP) | 0.100 50V Z RECT. | チップセラF | | | |
| C28 | **US062100** | CERAMIC CAPACITOR (CHIP) | 100P 50V J RECT. | チップセラ(SL) | | | |
| C30 | **US065100** | CERAMIC CAPACITOR (CHIP) | 0.100 50V Z RECT. | チップセラF | | | |
| -32 | **US065100** | CERAMIC CAPACITOR (CHIP) | 0.100 50V Z RECT. | チップセラF | | | |
| C34 | **US065100** | CERAMIC CAPACITOR (CHIP) | 0.100 50V Z RECT. | チップセラF | | | |
| C36 | **US065100** | CERAMIC CAPACITOR (CHIP) | 0.100 50V Z RECT. | チップセラF | | | |
| C37 | **US065100** | CERAMIC CAPACITOR (CHIP) | 0.100 50V Z RECT. | チップセラF | | | |
| C39 | **US065100** | CERAMIC CAPACITOR (CHIP) | 0.100 50V Z RECT. | チップセラF | | | |

✻: New Parts

RANK: Japan only

# PS

| REF NO. | PART NO. | DESCRIPTION | | 部品名 | REMARKS | QTY | RANK |
|---|---|---|---|---|---|---|---|
| C42 | **ZH027100** | MONOLITHIC CERAMIC CAP(CHIP) | 1000P 1KV K | チップ積層セラコン | | | |
| C43 | **ZH027100** | MONOLITHIC CERAMIC CAP(CHIP) | 1000P 1KV K | チップ積層セラコン | | | |
| C49 | **US065100** | CERAMIC CAPACITOR (CHIP) | 0.100 50V Z RECT. | チップセラ F | | | |
| IC1 | **YF866A00** | IC | FA5640N-C6-TE3 | I C | QUASI-RESONANT CONTROL | | |
| L16 | **VY657200** | CHIP INDUCTANCE | 600 BK1608HM601-T | チップインダクタ | | | |
| L16 | **WG595200** | CHIP INDUCTANCE | GZ1608D601 1608 | チップインダクタ | | | |
| L17 | **VY657200** | CHIP INDUCTANCE | 600 BK1608HM601-T | チップインダクタ | | | |
| L17 | **WG595200** | CHIP INDUCTANCE | GZ1608D601 1608 | チップインダクタ | | | |
| ⚠ R1 | **ZC799900** | CARBON RESISTOR (CHIP) | 220.0K 1/4 5%J 32 | チップ抵抗 | | | 01 |
| ⚠ R2 | **ZC799900** | CARBON RESISTOR (CHIP) | 220.0K 1/4 5%J 32 | チップ抵抗 | | | 01 |
| R3 | **RD358150** | CARBON RESISTOR (CHIP) | 150.0K 63M J RECT. | チップ抵抗 | | | |
| R4 | **RD15647R** | CARBON RESISTOR (CHIP) | 4.7K 1/4 J TP | チップ抵抗 | | | |
| R5 | **RD15647R** | CARBON RESISTOR (CHIP) | 4.7K 1/4 J TP | チップ抵抗 | | | |
| R6 | **RD15447R** | CARBON RESISTOR (CHIP) | 47.0 1/4 J TP | チップ抵抗 | | | 01 |
| R7 | **RD355470** | CARBON RESISTOR (CHIP) | 470.0 63M J RECT. | チップ抵抗 | | | |
| R8 | **RD15447R** | CARBON RESISTOR (CHIP) | 47.0 1/4 J TP | チップ抵抗 | | | 01 |
| R11 | **RD357100** | CARBON RESISTOR (CHIP) | 10.0K 63M J RECT. | チップ抵抗 | | | |
| R12 | **ZF249500** | CARBON RESISTOR (CHIP) | 0.1 1W J 5025 | チップ抵抗 | | | 01 |
| R14 | **RD35347R** | CARBON RESISTOR (CHIP) | 4.7 63M J RECT. | チップ抵抗 | | | 01 |
| R15 | **RD356220** | CARBON RESISTOR (CHIP) | 2.2K 63M J RECT. | チップ抵抗 | | | 01 |
| R16 | **RD357470** | CARBON RESISTOR (CHIP) | 47.0K 63M J RECT. | チップ抵抗 | | | |
| R17 | **RD15422R** | CARBON RESISTOR (CHIP) | 22.0 1/4 J TP | チップ抵抗 | | | 01 |
| R19 | **RD356220** | CARBON RESISTOR (CHIP) | 2.2K 63M J RECT. | チップ抵抗 | | | 01 |
| R20 | **RF457360** | CARBON RESISTOR (CHIP) | 36.0K D RECT. | チップ抵抗 | | | |
| R21 | **RF457560** | CARBON RESISTOR (CHIP) | 56.0K D RECT. | チップ抵抗 | | | |
| R23 | **RF457150** | CARBON RESISTOR (CHIP) | 15.0K D 1608 | チップ抵抗 | | | |
| R24 | **RF456680** | CARBON RESISTOR (CHIP) | 6.8K D RECT. | チップ抵抗 | | | |
| R25 | **RD357330** | CARBON RESISTOR (CHIP) | 33.0K 63M J RECT. | チップ抵抗 | | | |
| R27 | **RD357220** | CARBON RESISTOR (CHIP) | 22.0K 63M J RECT. | チップ抵抗 | | | |
| R29 | **RD357820** | CARBON RESISTOR (CHIP) | 82.0K 63M J RECT. | チップ抵抗 | | | 01 |
| R31 | **RD357220** | CARBON RESISTOR (CHIP) | 22.0K 63M J RECT. | チップ抵抗 | | | |
| R33 | **RD357100** | CARBON RESISTOR (CHIP) | 10.0K 63M J RECT. | チップ抵抗 | | | |
| R35 | **RD356100** | CARBON RESISTOR (CHIP) | 1.0K 63M J RECT. | チップ抵抗 | | | 01 |
| R36 | **RD357100** | CARBON RESISTOR (CHIP) | 10.0K 63M J RECT. | チップ抵抗 | | | |
| R37 | **RD355820** | CARBON RESISTOR (CHIP) | 820.0 63M J RECT. | チップ抵抗 | | | |
| R38 | **RD357220** | CARBON RESISTOR (CHIP) | 22.0K 63M J RECT. | チップ抵抗 | | | |
| R40 | **RD357820** | CARBON RESISTOR (CHIP) | 82.0K 63M J RECT. | チップ抵抗 | | | |
| R41 | **RD356100** | CARBON RESISTOR (CHIP) | 1.0K 63M J RECT. | チップ抵抗 | | | 01 |
| R42 | **RD357100** | CARBON RESISTOR (CHIP) | 10.0K 63M J RECT. | チップ抵抗 | | | |
| R43 | **RD357100** | CARBON RESISTOR (CHIP) | 10.0K 63M J RECT. | チップ抵抗 | | | |
| R44 | **RF458270** | CARBON RESISTOR (CHIP) | 270.0K D RECT. | チップ抵抗 | | | 01 |
| R45 | **RF456750** | CARBON RESISTOR (CHIP) | 7.5K D RECT. | チップ抵抗 | | | |
| R46 | **RD357100** | CARBON RESISTOR (CHIP) | 10.0K 63M J RECT. | チップ抵抗 | | | |
| R47 | **RD358100** | CARBON RESISTOR (CHIP) | 100.0K 63M J RECT. | チップ抵抗 | | | 01 |
| R48 | **RD357470** | CARBON RESISTOR (CHIP) | 47.0K 63M J RECT. | チップ抵抗 | | | |
| -51 | **RD357470** | CARBON RESISTOR (CHIP) | 47.0K 63M J RECT. | チップ抵抗 | | | |
| TR1 | **VJ927100** | TRANSISTOR | 2SC2712-Y(TE85R,F) | トランジスタ 2SC | | | |
| -3 | **VJ927100** | TRANSISTOR | 2SC2712-Y(TE85R,F) | トランジスタ 2SC | | | |
| TR1 | **VV556400** | TRANSISTOR | 2SC2412K Q,R,S TP | トランジスタ | | | |
| -3 | **VV556400** | TRANSISTOR | 2SC2412K Q,R,S TP | トランジスタ | | | |
| TR1 | **VV92540R** | TRANSISTOR | 2SC2712-GR(TE85L,F) | チップトランジスタ | | | 01 |
| -3 | **VV92540R** | TRANSISTOR | 2SC2712-GR(TE85L,F) | チップトランジスタ | | | 01 |
| TR4 | **VV556500** | TRANSISTOR | 2SA1037AK Q,R,S TP | トランジスタ 2SA | | | |
| TR4 | **WC529500** | TRANSISTOR | KTA1504S-Y,GR-RTK | トランジスタ | | | |
| TR5 | **VJ927100** | TRANSISTOR | 2SC2712-Y(TE85R,F) | トランジスタ 2SC | | | |
| -7 | **VJ927100** | TRANSISTOR | 2SC2712-Y(TE85R,F) | トランジスタ 2SC | | | |
| TR5 | **VV556400** | TRANSISTOR | 2SC2412K Q,R,S TP | トランジスタ | | | |
| -7 | **VV556400** | TRANSISTOR | 2SC2412K Q,R,S TP | トランジスタ | | | |
| TR5 | **VV92540R** | TRANSISTOR | 2SC2712-GR(TE85L,F) | チップトランジスタ | | | 01 |
| -7 | **VV92540R** | TRANSISTOR | 2SC2712-GR(TE85L,F) | チップトランジスタ | | | 01 |
| ZD1 | **WW064600** | ZENER DIODE | DZ2J240M0L 24V | ツェナーダイオード | | | |
| C11 | **ZH027600** | ELECTROLYTIC CAPACITOR | 150.0 35.0V TATETE | ケミコン KY | | | |
| C33 | **UR838101** | ELECTROLYTIC CAPACITOR | 100.00 16.0V RX TP | ケミコン | | | 01 |
| C40 | **WD70780R** | CERAMIC CAPACITOR | 2200P 1KV K RX TP | セラコン(B) | | | |
| C46 | **ZH027600** | ELECTROLYTIC CAPACITOR | 150.0 35.0V TATETE | ケミコン KY | | | |
| C47 | **UR867100** | ELECTROLYTIC CAPACITOR | 10.00 50.0V RX TP | ケミコン | | | |
| C50 | **UR867100** | ELECTROLYTIC CAPACITOR | 10.00 50.0V RX TP | ケミコン | | | |
| C53 | **UR867100** | ELECTROLYTIC CAPACITOR | 10.00 50.0V RX TP | ケミコン | | | |
| FZ1 | **WQ778800** | FUSE HOLDER | PIN TP00526-31 | ヒューズホルダ | | 2 | 01 |
| FZ1 | **--** | FUSE HOLDER | PIN HF-004/PT | ヒューズホルダ | (ZJ08480) | 2 | |

✻: New Parts

RANK: Japan only

## PS

| REF NO. | PART NO. | DESCRIPTION | | 部品名 | REMARKS | QTY | RANK |
|---|---|---|---|---|---|---|---|
| L4 | **GE300670** | FERRITE BEAD | BL02RN2R1P1A TATET | フェライトビーズ | | | 02 |
| -6 | **GE300670** | FERRITE BEAD | BL02RN2R1P1A TATET | フェライトビーズ | | | 02 |
| L9 | **GE300670** | FERRITE BEAD | BL02RN2R1P1A TATET | フェライトビーズ | | | 02 |
| -12 | **GE300670** | FERRITE BEAD | BL02RN2R1P1A TATET | フェライトビーズ | | | 02 |
| L14 | **GE300670** | FERRITE BEAD | BL02RN2R1P1A TATET | フェライトビーズ | | | 02 |
| D1 | **WJ116301** | SCHOTTKY DIODE | D1NS4-5070 26 | ショットキダイオード | | | 01 |
| D1 | **WJ172700** | SCHOTTKY DIODE | D1NS4-5060 52 | ショットキダイオード | | | 01 |
| D3 | **VN51730R** | DIODE | D1NL20U4060 1A 200V | ダイオード | | | 01 |
| D4 | **VB941200** | DIODE | 1SS133,1SS176 TE-5 | ダイオード | | | |
| D7 | **VB941200** | DIODE | 1SS133,1SS176 TE-5 | ダイオード | | | |
| -9 | **VB941200** | DIODE | 1SS133,1SS176 TE-5 | ダイオード | | | |
| | | | | | | | |
| | **X6296B00** | LOUD SPEAKER | 16.0 cm 6 ohm 40W | スピーカ | WOOFER | 2 | 09 |
| | **X6296C00** | LOUD SPEAKER | 16.0 cm 6 ohm 45W | スピーカ | | 2 | 08 |
| | **XL455A0R** | SPEAKER | 5.0 cm 16 ohm 60W | スピーカ | SQUAWKER | 2 | 07 |
| | | | | | | | |
| | **ZH222000** | CRYSTAL DISPLAY | UMVH-8814MD-1F | LCDユニット | | | |

✻: New Parts

RANK: Japan only

Clavinova®

# CLP-565GP/CLP-565GPWH

# CIRCUIT DIAGRAM

■ **CONTENTS**


BLOCK DIAGRAM ..... 2
CIRCUIT BOARD LAYOUT & WIRING..... 3
CIRCUIT DIAGRAM
- DM (001–003)..... 5–7
- JK (001–003) (JK, AJK, DJK) ..... 8–10
- LCD ..... 11
- MK (001–003) (MK-L, MK-M, MK-H) ..... 12–14
- PN (PNL, PSW, VR)..... 15
- PS ..... 16
- FU, PEDAL, PL ..... 17


**Notation for Circuit Diagrams**

1. How to identify inter-sheet connectors

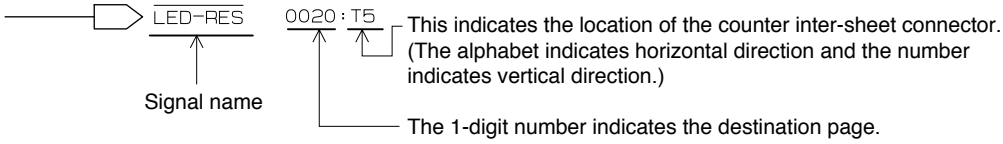


2. Connection of connectors.

(Example) to PS-CN4
(Page 16: B-3)

Page 16 are the page of a circuit diagram.

B-3 is indicates the location of the counter inter-circuit board connector.
(The alphabet indicates horizontal direction and the number indicates vertical direction.)

**Note : See parts list for details of circuit board conponent parts.**

■ **WARNING**

**Components having special characteristics are marked ⚠ and must be replaced with parts having specification equal to those originally installed.**

# ■ BLOCK DIAGRAM (CLP-565GP/CLP-565GPWH)



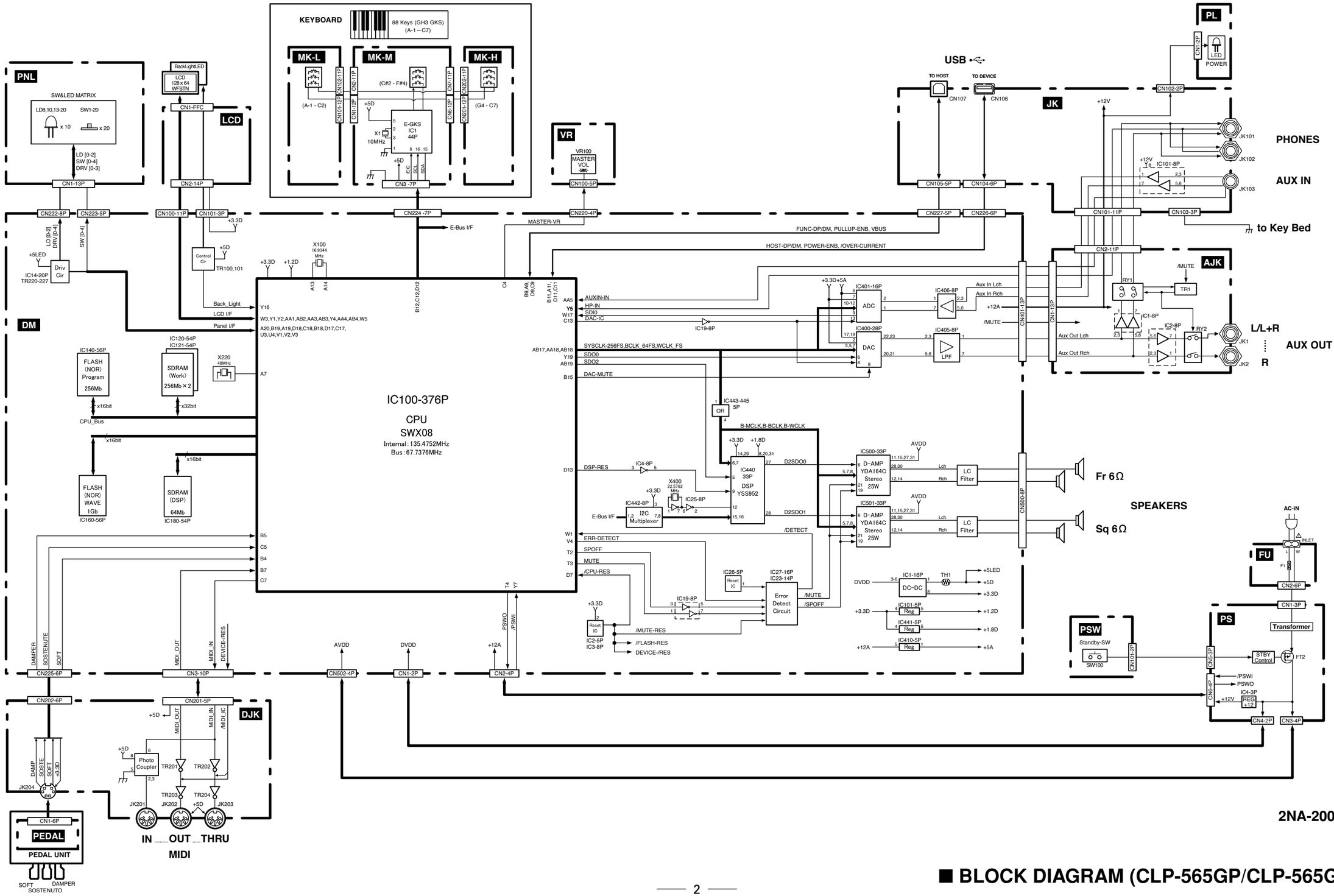


2NA-2001127857



■ BLOCK DIAGRAM (CLP-565GP/CLP-565GPWH)

# ■ CIRCUIT BOARD LAYOUT & WIRING (CLP-565GP/CLP-565GPWH)

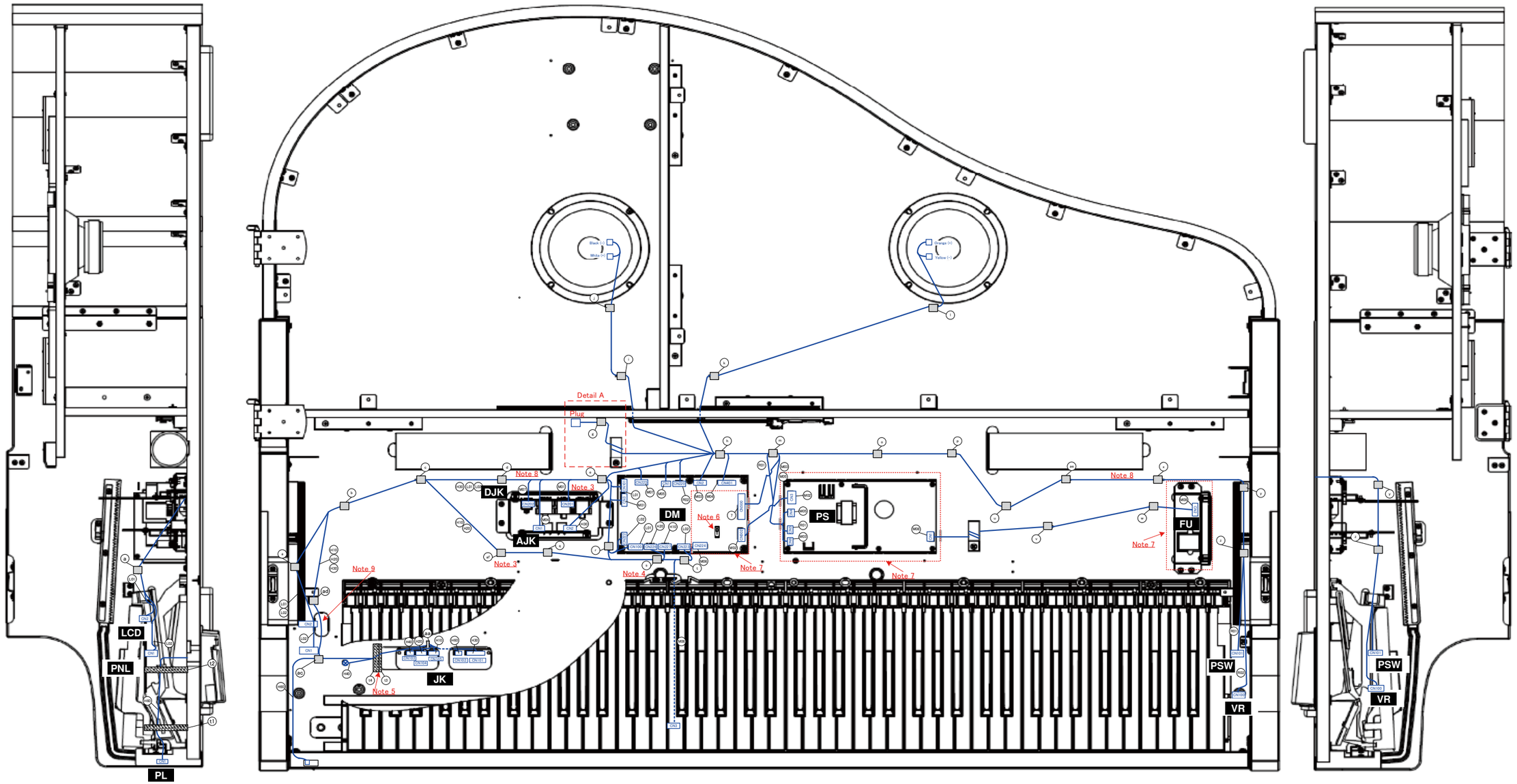


Detail A :

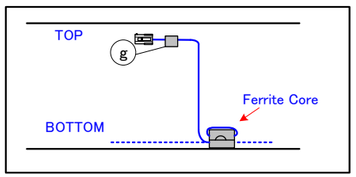


Note 1 :

This drawing should be used only for the reference of installing connector assembly.

Note 2 :

Symbols of binding parts

: Filament Tape
: Cord Binder
: Cable Holder

Note 3 :

(L01)(L02)(H30) is careful of the appearance which does not contact the edge of JACK assembly metal frame.

(H10)(H20) is careful of the appearance which does not contact the edge of JACK assembly metal frame and key stop rail stay.

Note 4 :

(L02)(H20)(H30)(M06) is fixed by displayed Cord Binder (q)(s)(t) careful so that a keyboard hammer may not be touch.

2NC-ZJ19740-5 ⚠2

■ CIRCUIT BOARD LAYOUT & WIRING (CLP-565GP/CLP-565GPWH)

# ■ CIRCUIT BOARD LAYOUT & WIRING (CLP-565GP/CLP-565GPWH)

Note 5 :

(t3)(t4) is stick in the edge of HP/USB assembly hole.

The order stick of (t3)(t4) (please follow below drawing).

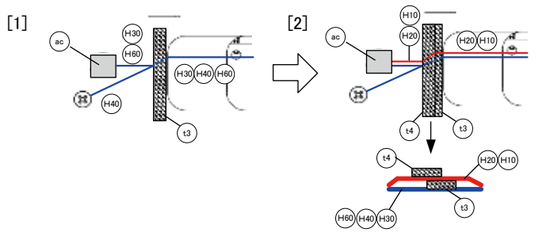


Note 6 :

SW100, SW101 and SW103 of DM circuit board is set as shown in the figure below.

| Location / Model | SW100 | SW101 | SW103 |
|---|---|---|---|
| CLP-565GP | SW = ON | SW = OFF | SW = OFF |

Note 7 :

DM, PS and FU cover are used for U destination only.
In case DM, PS and FU are equipped with a cover, adjust the tension of wire harness so that a burden dose not arise to each connector. Moreover, don't squeezed wire harness by the cover.

Note 8 :

(L01)(L02)(M04)(M07)(R01)(R02) is careful of the appearance which does not contact to AD resonator.

Note 9 :

Wire (H10)(H20)(H30) should be place below the angle parts.

| Location | Part No. | Part Name | Destination | | Fixed Position | Note |
|---|---|---|---|---|---|---|
| L01 | (ZH98310) | Connector Assembly ZH-PH | LCD CN2 (PH14P) | DM CN100 (ZH11P) | ⓐⓑⓒⓓⓔⓡ | Key Block L Assembly |
| | | | | DM CN101 (ZH3P) | ⓐⓑⓒⓓⓔ | |
| L02 | (ZH98330) | Connector Assembly ZH-PH | PNL CN1 (PH13P) | DM CN222 (ZH8P) | ⓐⓑⓒⓓⓔⓡ | |
| | | | | DM CN223 (ZH5P) | ⓐⓑⓒⓓⓔⓡⓢⓣ | |
| R01 | (ZH98340) | Connector Assembly PH-PH | PSW CN101 (PH2P) - PS CN5 (PH3P) | | ⓩⓨⓧⓐⓔⓤⓟⓞⓜ | Key Block R Assembly |
| R02 | (ZJ21980) | Connector Assembly ZH-PH | VR CN100 (PH5P) - DM CN220 (ZH4P) | | ⓩⓨⓧⓐⓔⓤⓟⓞⓜⓗ | |
| H10 | (ZM27680) | USB Cable | JK CN105 (PH5P) - DM CN227 (PH5P) | | ⓐⓐⓣ④ⓐⓒⓐⓓⓑⓒⓐⓕⓠⓢ | HP/USB Assembly |
| H20 | (WK78590) | USB Cable | JK CN104 (PH6P) - DM CN226 (PH6P) | | ⓐⓐⓣ④ⓐⓒⓐⓓⓑⓒⓐⓕⓠⓢ | |
| H30 | (ZM61100) | Connector Assembly PH-PH | JK CN101 (PH11P) - AJK CN2 (PH11P) | | ⓐⓐⓣ③ⓣ④ⓐⓒⓐⓓⓑⓒⓓⓔ | |
| H40 | (ZH98290) | Connector Assembly GND | JK CN103 (XH3P) - Keybed | | ⓐⓐⓣ③ⓣ④ | |
| H60 | (ZJ57830) | Connector Assembly PH-PH | PL CN1 (PH2P) - JK CN102 (PH2P) | | ⓐⓐⓣ③ⓣ④ⓐⓒⓣ②ⓣ① | |
| M01 | (ZH98250) | Connector Assembly ZH-PH | DM CN3 (ZH10P) - DJK CN201 (PH5P) | | ⓔ | MAIN UNIT |
| M02 | (ZH98300) | Connector Assembly VH | PS CN3 (VH4P) – DM CN502 (VH4P) | | - | |
| M03 | (WE30640) | Connector Assembly PH | PS CN6 (PH4P) – DM CN2 (PH4P) | | ⓗⓜ | |
| M04 | (ZH98380) | Connector Assembly ZH-PH | DM CN401 (ZH13P) - AJK CN1 (PH13P) | | ⓔⓗ | |
| M05 | (ZH98390) | Connector Assembly XH | PS CN4 (XH2P) – DM CN1 (XH2P) | | ⓗⓜ | |
| M06 | (ZH98440) | Connector Assembly PH | MK-M CN3 (PH7P) - DM CN224 (PH7P) | | ⓣ | |
| M07 | (ZH98370) | Connector Assembly ZH-PH | DM CN225 (ZH6P) - DJK CN202 (PH6P) | | ⓔ | |
| M08 | (ZJ57880) | Connector Assembly PS | PS CN1 (VH3P) – FU CN2 (VH6P) | | ⓥⓦ | |
| 7 From Partition A | (ZK06940) | Connector Assembly SP-MLGP | SP Rch (SP (+, -)) – DM CN500 (VH8P (3, 4P)) | | ⓜⓗⓚⓛ | Orange/Yellow |
| | | | SP Lch (SP (+, -)) – DM CN500 (VH8P (1, 2P)) | | ⓜⓗⓘⓙ | White/Black |
| | | | Plug | | ⓜⓗⓖ | |
| t1 – t4 | (VP83460) | Tape 12 x 50 | – | | ⓣ①ⓣ②ⓣ③ⓣ④ | |

NOTE) The parts with "( )" in "Part No." are not available as service parts.

2NC-ZJ19740-6 ⚠3

# ■ DM 001 CIRCUIT DIAGRAM (CLP-565GP/CLP-565GPWH)

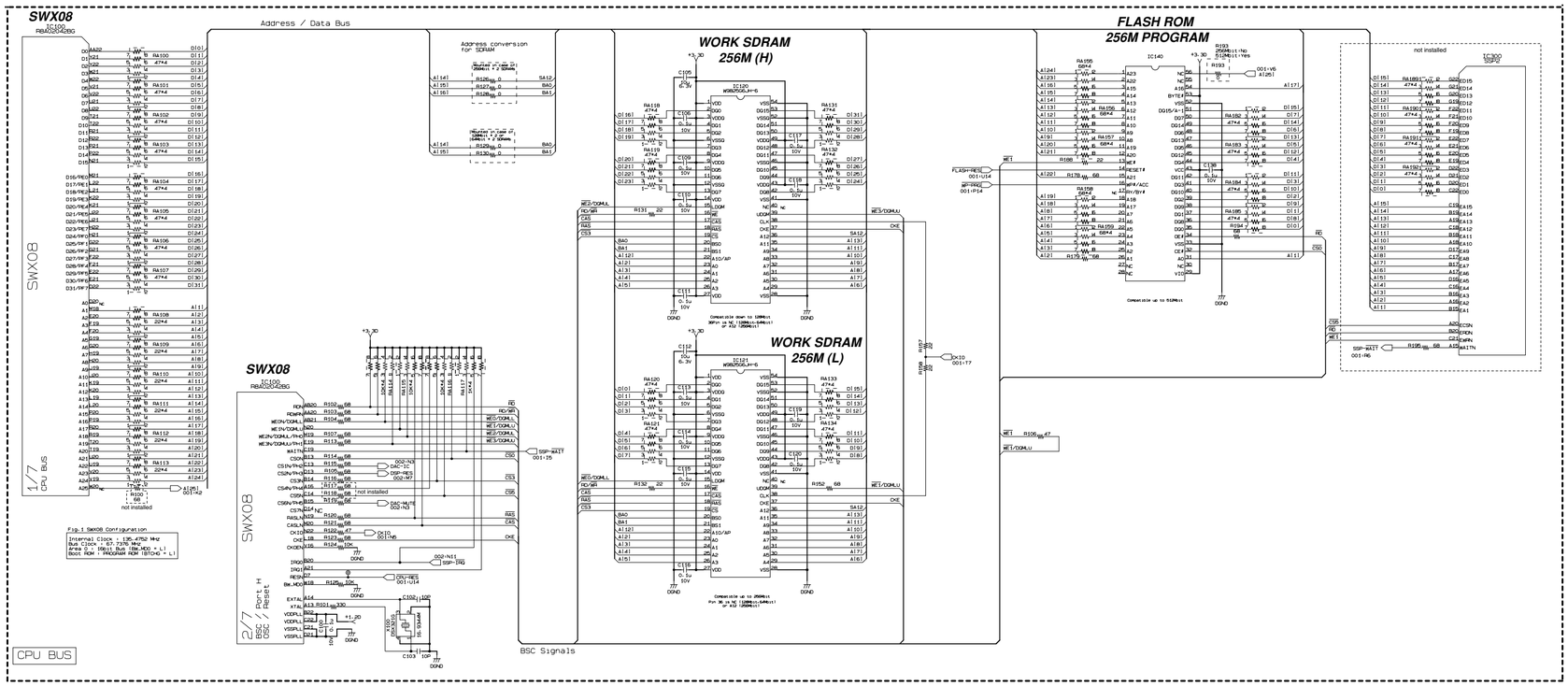


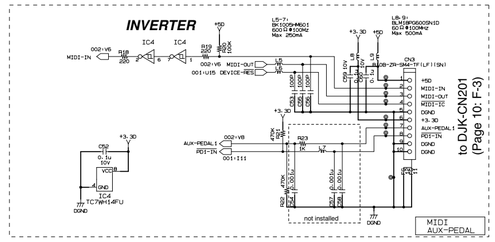


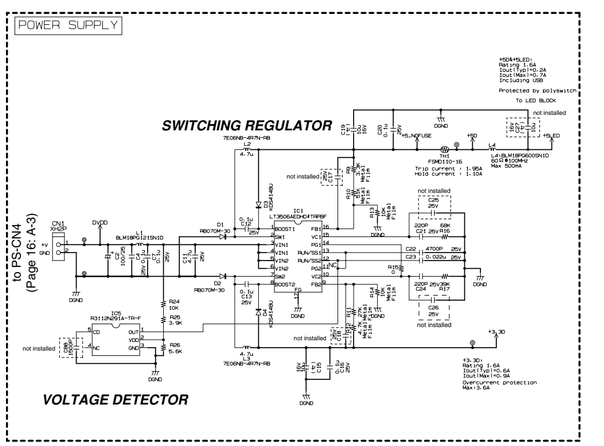


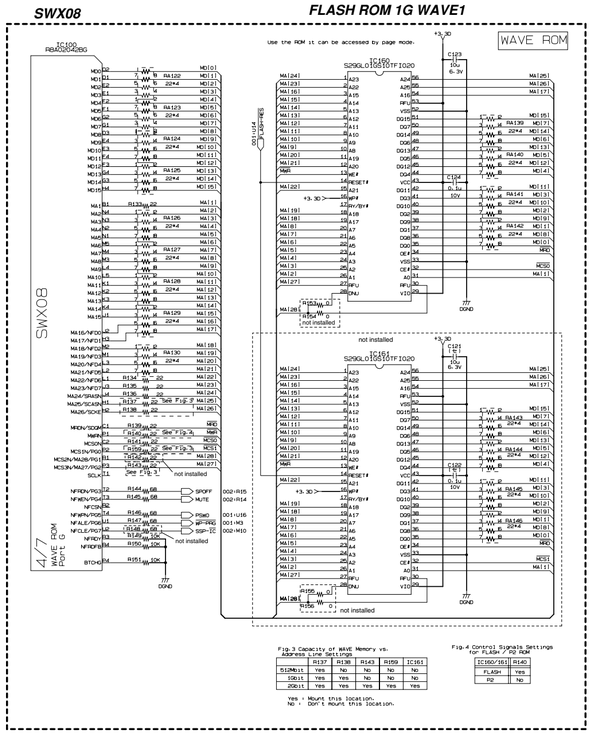


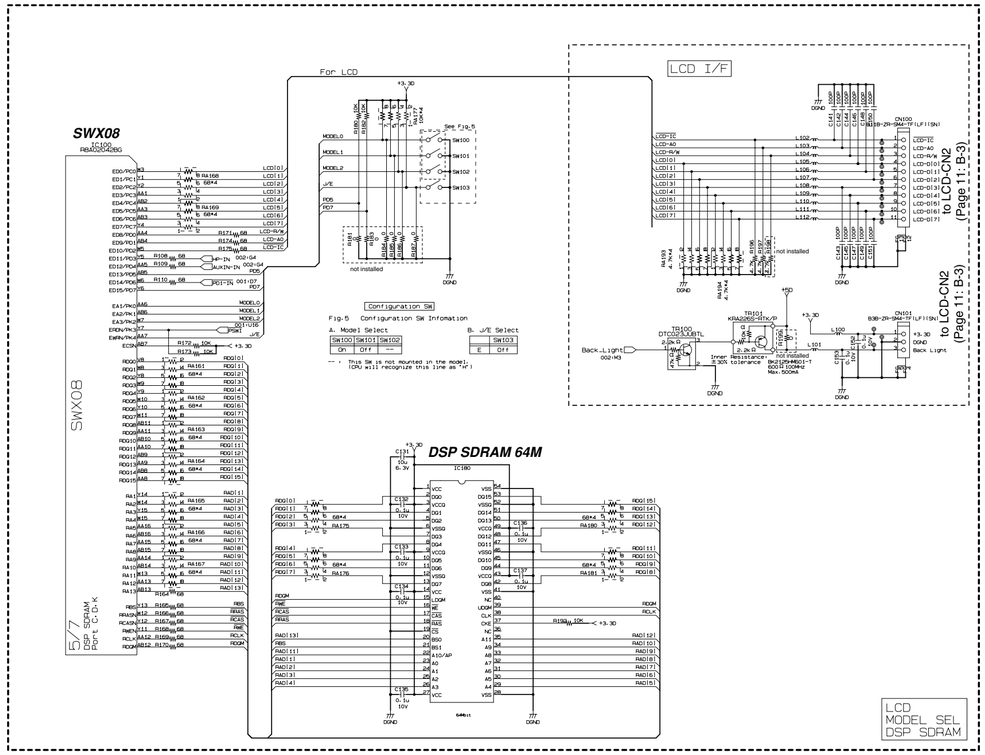


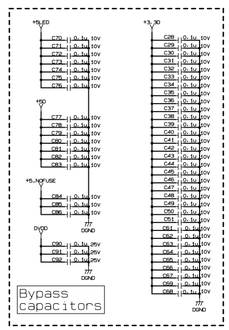








28CC1-2001128192-1 ⚠

## ■ DM 002 CIRCUIT DIAGRAM (CLP-565GP/CLP-565GPWH)

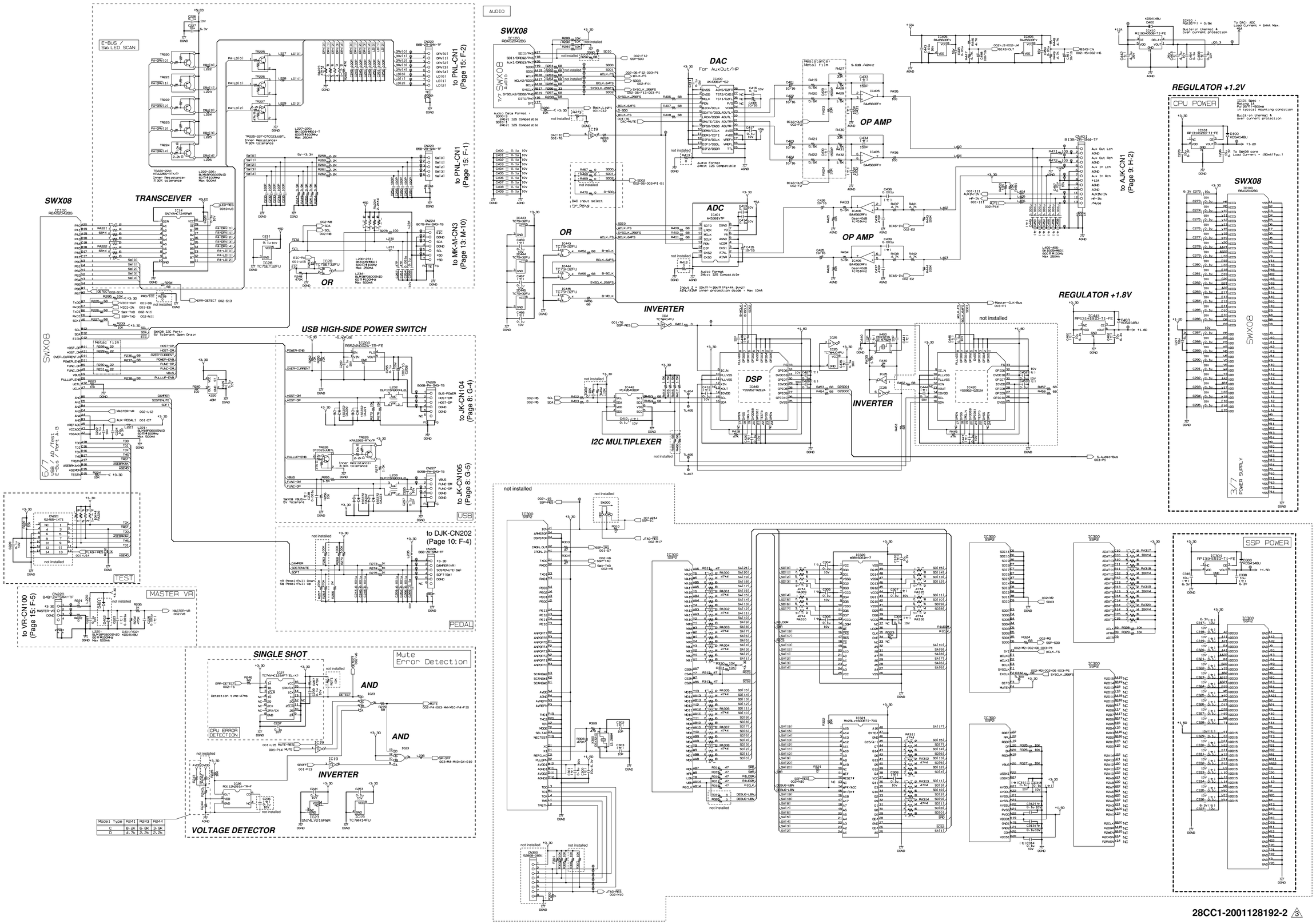


| Model | Type | R241 | R243 | R244 |
|---|---|---|---|---|
| C | | 8.2k | 6.8k | 3.9k |
| D | | 4.7k | 2.2k | 2.2k |

28CC1-2001128192-2 3

# ■ DM 003 CIRCUIT DIAGRAM (CLP-565GP/CLP-565GPWH)



Dgital AMP

S_Audio-Bus

Master-CLK-Bus
002:E9

## DIGITAL AUDIO POWER AMPLIFIER

Output Select:Stereo
Carrire Clock:705.6KHz
(CKMOD:H, HOPP:L)
GAIN:+6dB(GAIN1:L, GAINO:H)
Power Limit:-

MUTE
002:14

L510 CER8065-100M-R 10u
L511 CER8065-100M-R 10u
L512 CER8065-100M-R 10u
L513 CER8065-100M-R 10u

GAIN SETTING
INPUT=-20dBFS

| GAIN1 | GAINO | OUT PUT |
|---|---|---|
| L | L | 1.3Vrms |
| L | H | 2.6Vrms |
| H | L | 0.65Vrms |
| H | H | Don't |

IC501 YDA164C-QZE2

HPF:10Hz
LPF:20KHz

LIMIT SETTING

| R515 | R516 | SETTING |
|---|---|---|
| - | 15K | 15W SP:4Ω Mode_4 |
| - | 0 | not installed | No LIMIT Mode_0 |

D2SD00
SD02
B-MCLK
B-BCLK
B-WCLK

R529 0 not installed
R528 0 not installed
R524 47
R526 47
R522 47

R509 0 NoMount
R513 0 NoMount
R514 0 NoMount
R517 100
R518 100
SP-OFF

CN502 VH4P
+18DA
+18DA
PGND
PGND

L521 NFM31KC223R1H3L

to PS-CN3
<Page 16: A-2>

## DIGITAL AUDIO POWER AMPLIFIER

Output Select:Stereo
Carrire Clock:705.6KHz
(CKMOD:H, HOPP:L)
GAIN:+6dB(GAIN1:L, GAINO:H)
Power Limit:-

MUTE
002:14

L500 CER8065-100M-R 10u
L501 CER8065-100M-R 10u
L502 CER8065-100M-R 10u
L503 CER8065-100M-R 10u

GAIN SETTING
INPUT=-20dBFS

| GAIN1 | GAINO | OUT PUT |
|---|---|---|
| L | L | 1.3Vrms |
| L | H | 2.6Vrms |
| H | L | 0.65Vrms |
| H | H | Don't |

IC500 YDA164C-QZE2

HPF:10Hz
LPF:20KHz

LIMIT SETTING

| R503 | R506 | SETTING |
|---|---|---|
| - | 15K | 15W SP:4Ω Mode_4 |
| - | 0 | not installed | No LIMIT Mode_0 |

D2SD00
B-MCLK
B-BCLK
B-WCLK

R504 0 NoMount
R505 0 NoMount
R507 100
R508 100
SP-OFF

SP

6Ω ×4

CN500 VH8P

| | |
|---|---|
| WO_PL | to SPEAKER (WOOFER) |
| WO_ML | |
| WO_PR | |
| WO_MR | |
| SQ_PL | to SPEAKER (SQUAWKER) |
| SQ_ML | |
| SQ_PR | |
| SQ_MR | |

CN503 VH5P

| | |
|---|---|
| NC | |
| FR_PL | |
| FR_ML | |
| FR_PR | |
| FR_MR | |

not installed

4Ω ×2

# ■ JK 001 (JK) CIRCUIT DIAGRAM (CLP-565GP/CLP-565GPWH)



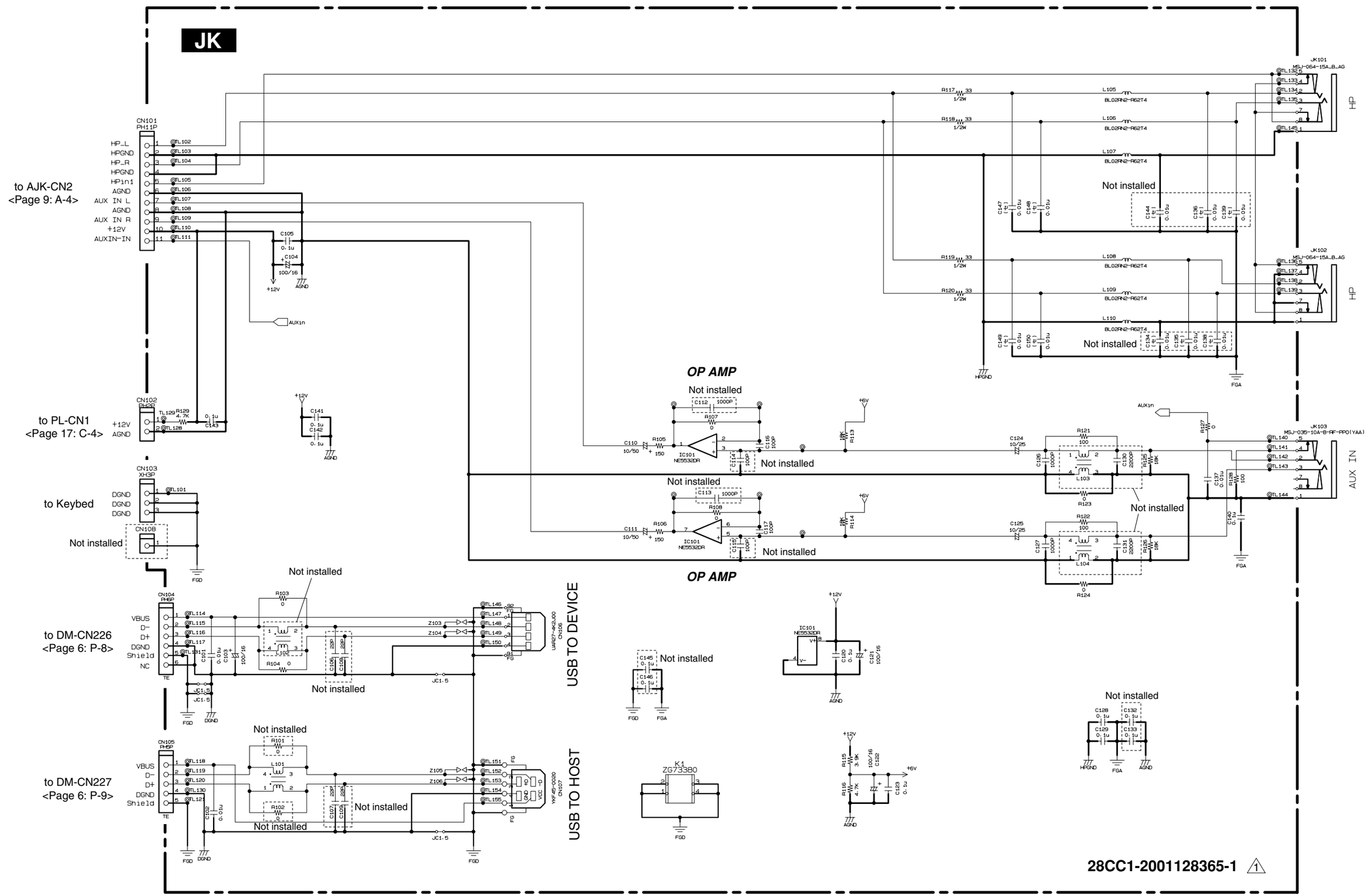




■ JK 001 (JK) CIRCUIT DIAGRAM (CLP-565GP/CLP-565GPWH)

# ■ JK 002 (AJK) CIRCUIT DIAGRAM (CLP-565GP/CLP-565GPWH)



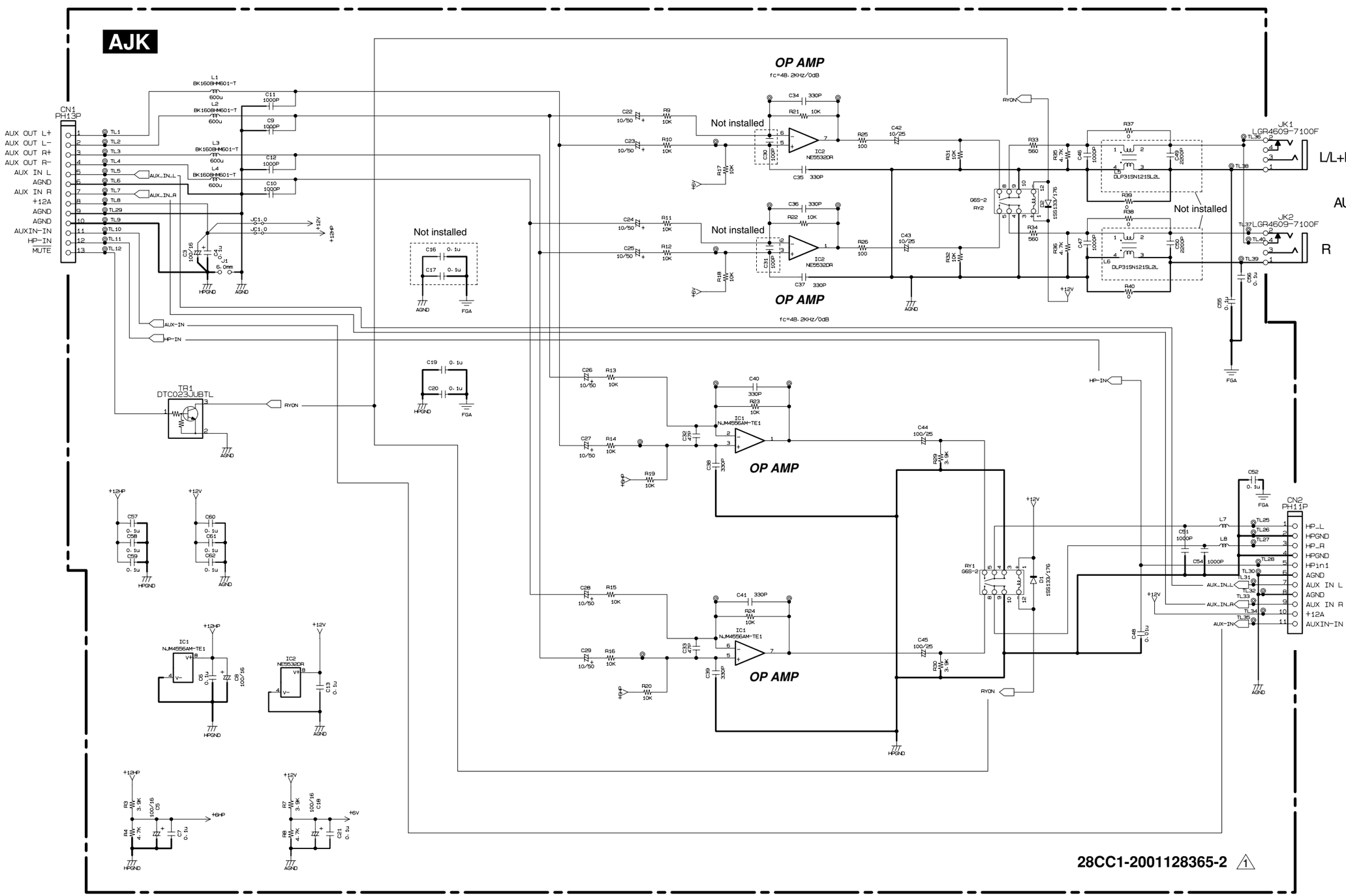




■ JK 002 (AJK) CIRCUIT DIAGRAM (CLP-565GP/CLP-565GPWH)

# ■ JK 003 (DJK) CIRCUIT DIAGRAM (CLP-565GP/CLP-565GPWH)



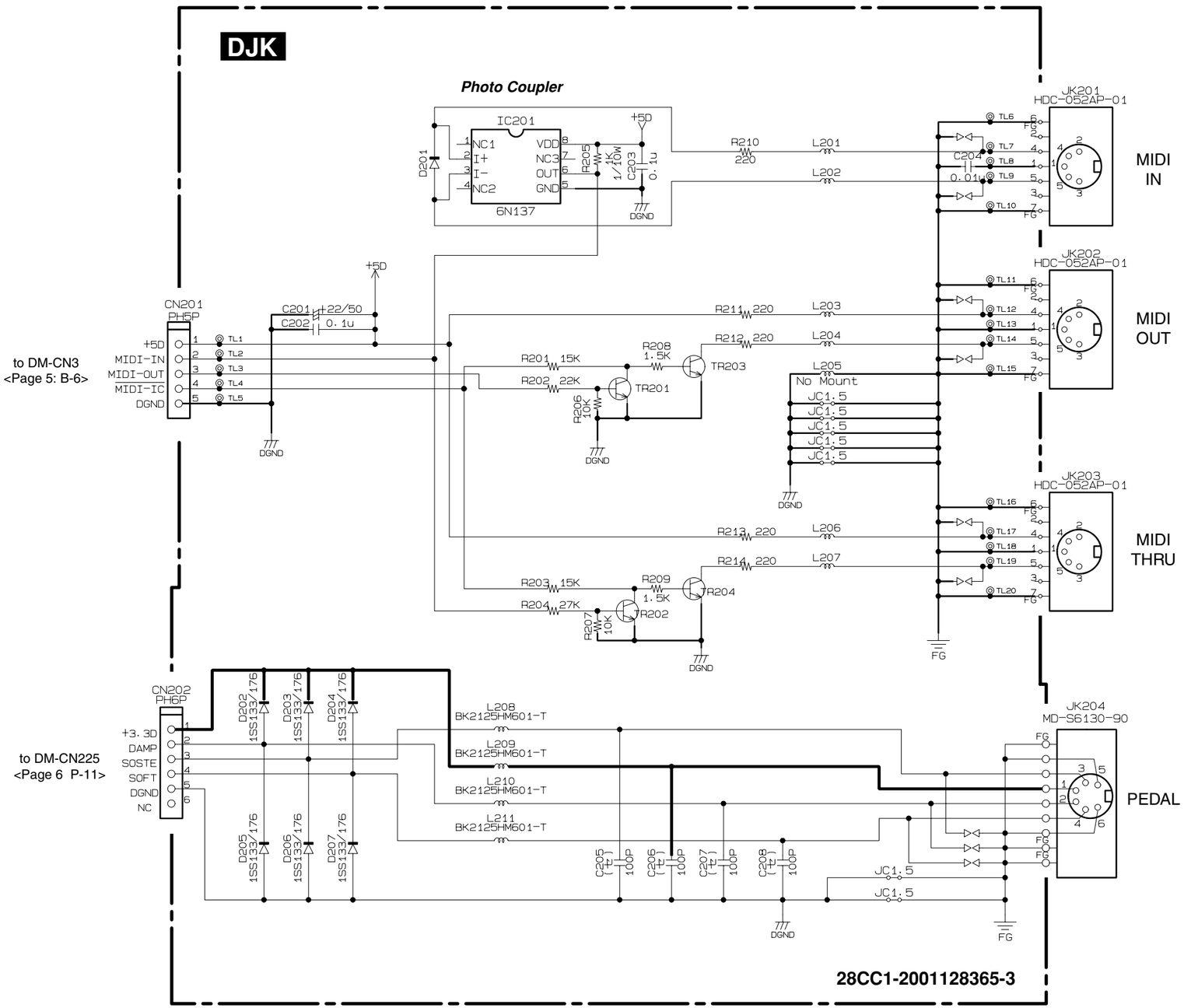


**28CC1-2001128365-3**



■ JK 003 (DJK) CIRCUIT DIAGRAM (CLP-565GP/CLP-565GPWH)

# ■ LCD CIRCUIT DIAGRAM (CLP-565GP/CLP-565GPWH)

## LCD

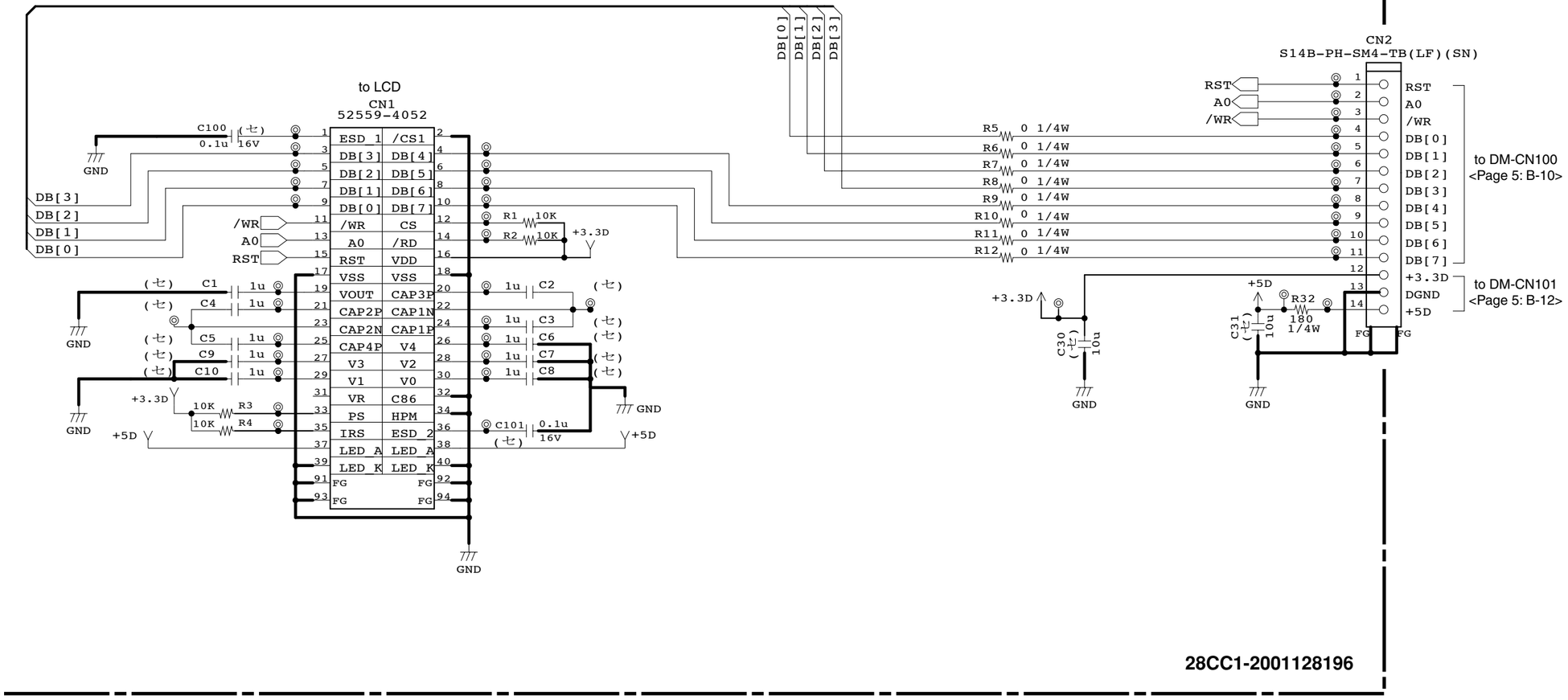


28CC1-2001128196



■ LCD CIRCUIT DIAGRAM (CLP-565GP/CLP-565GPWH)

# ■ MK 001 (MK-L) CIRCUIT DIAGRAM (CLP-565GP/CLP-565GPWH)

**MK-L**

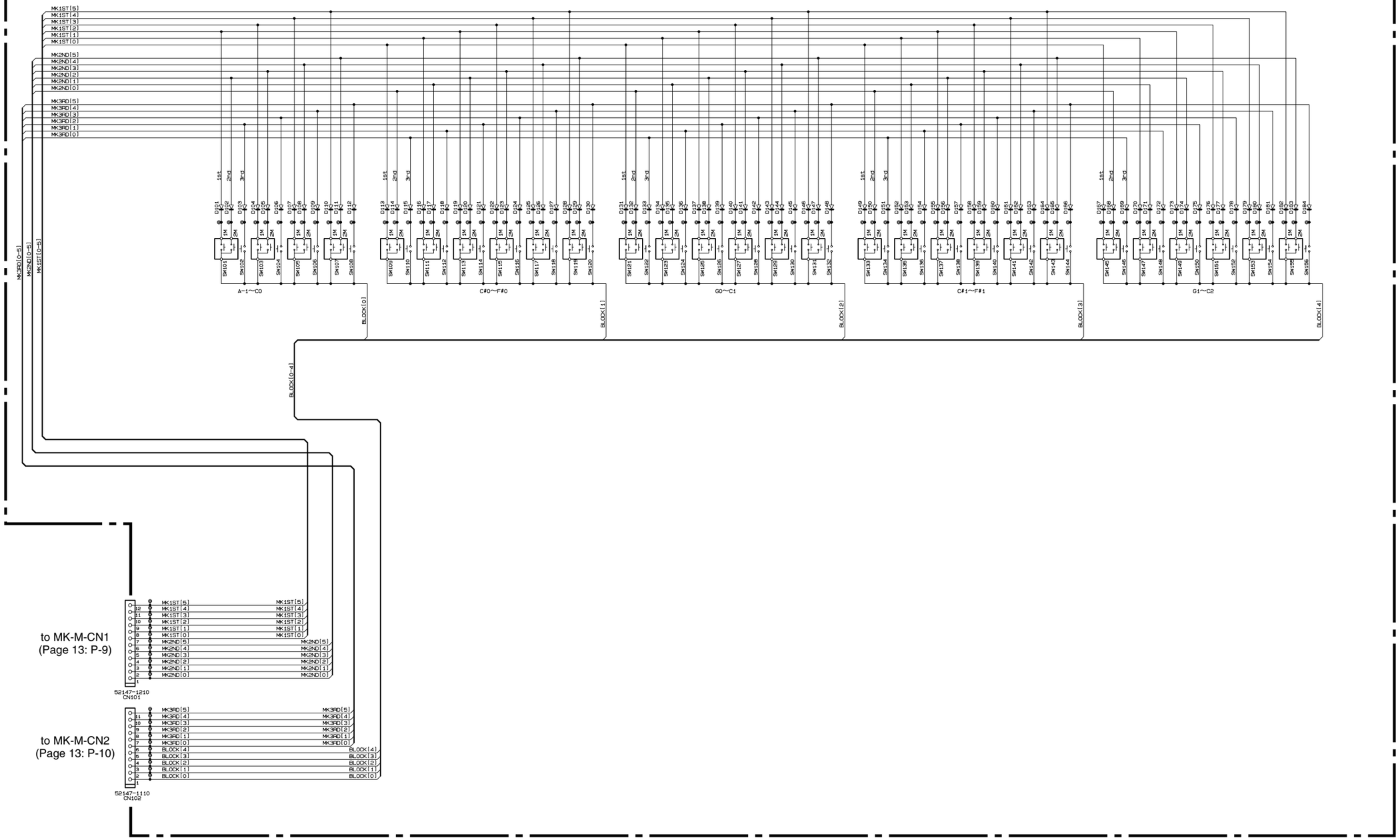


28CC1-2001073158-1



■ MK 001 (MK-L) CIRCUIT DIAGRAM (CLP-565GP/CLP-565GPWH)

# ■ MK 002 (MK-M) CIRCUIT DIAGRAM (CLP-565GP/CLP-565GPWH)

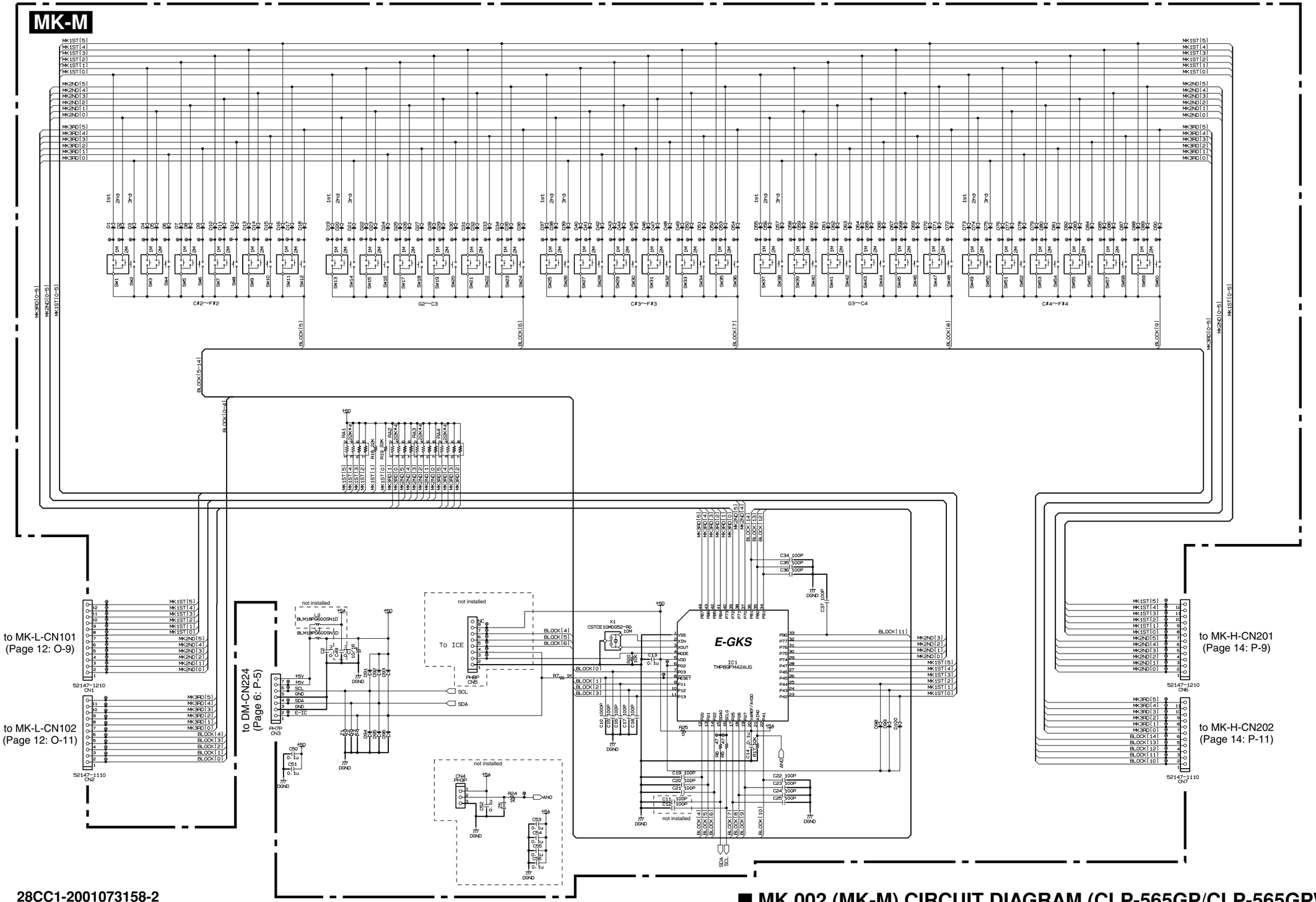


28CC1-2001073158-2



■ MK 002 (MK-M) CIRCUIT DIAGRAM (CLP-565GP/CLP-565GPWH)

# ■ MK 003 (MK-H) CIRCUIT DIAGRAM (CLP-565GP/CLP-565GPWH)

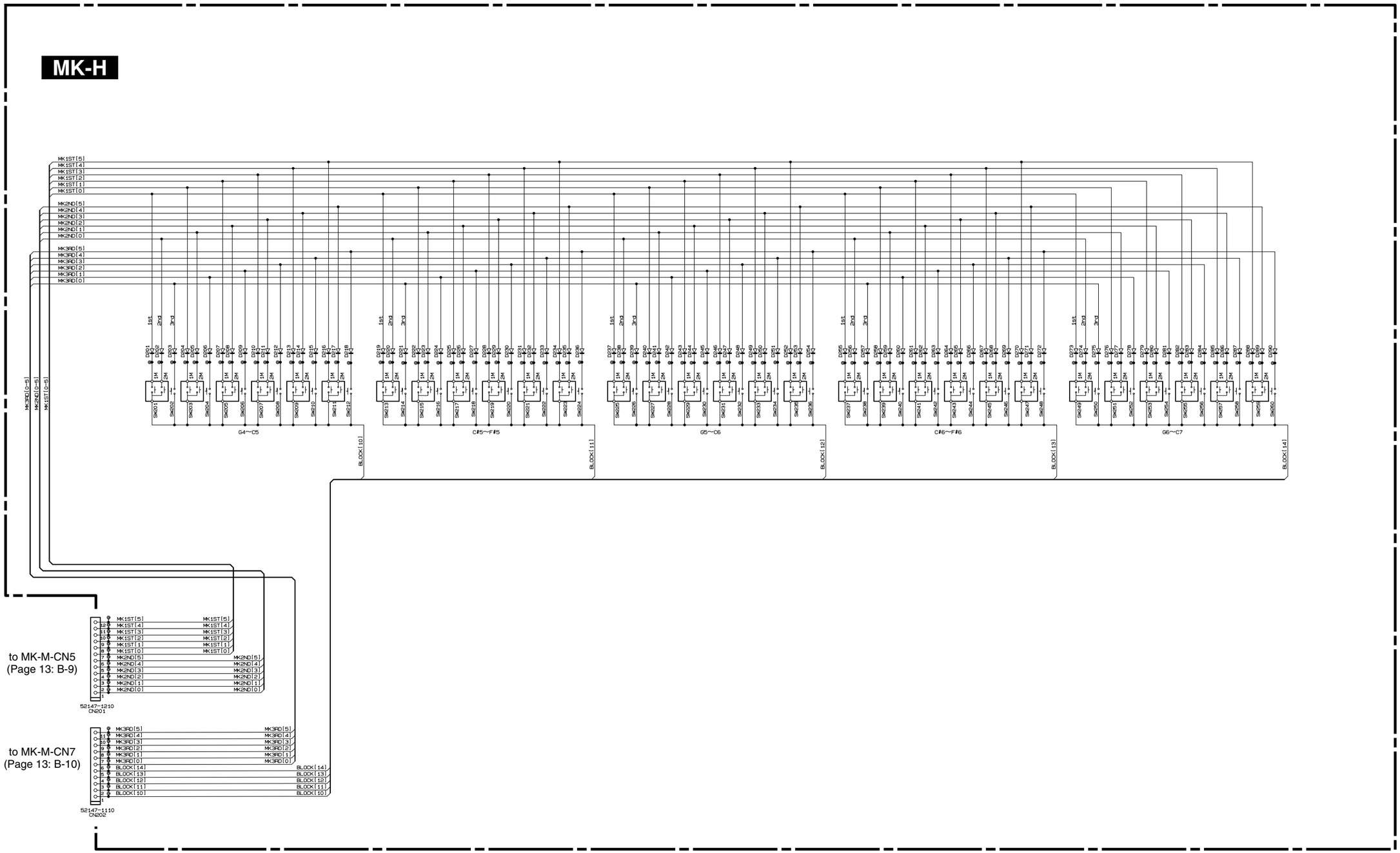

# ■ PN (PNL, PSW, VR) CIRCUIT DIAGRAM (CLP-565GP/CLP-565GPWH)

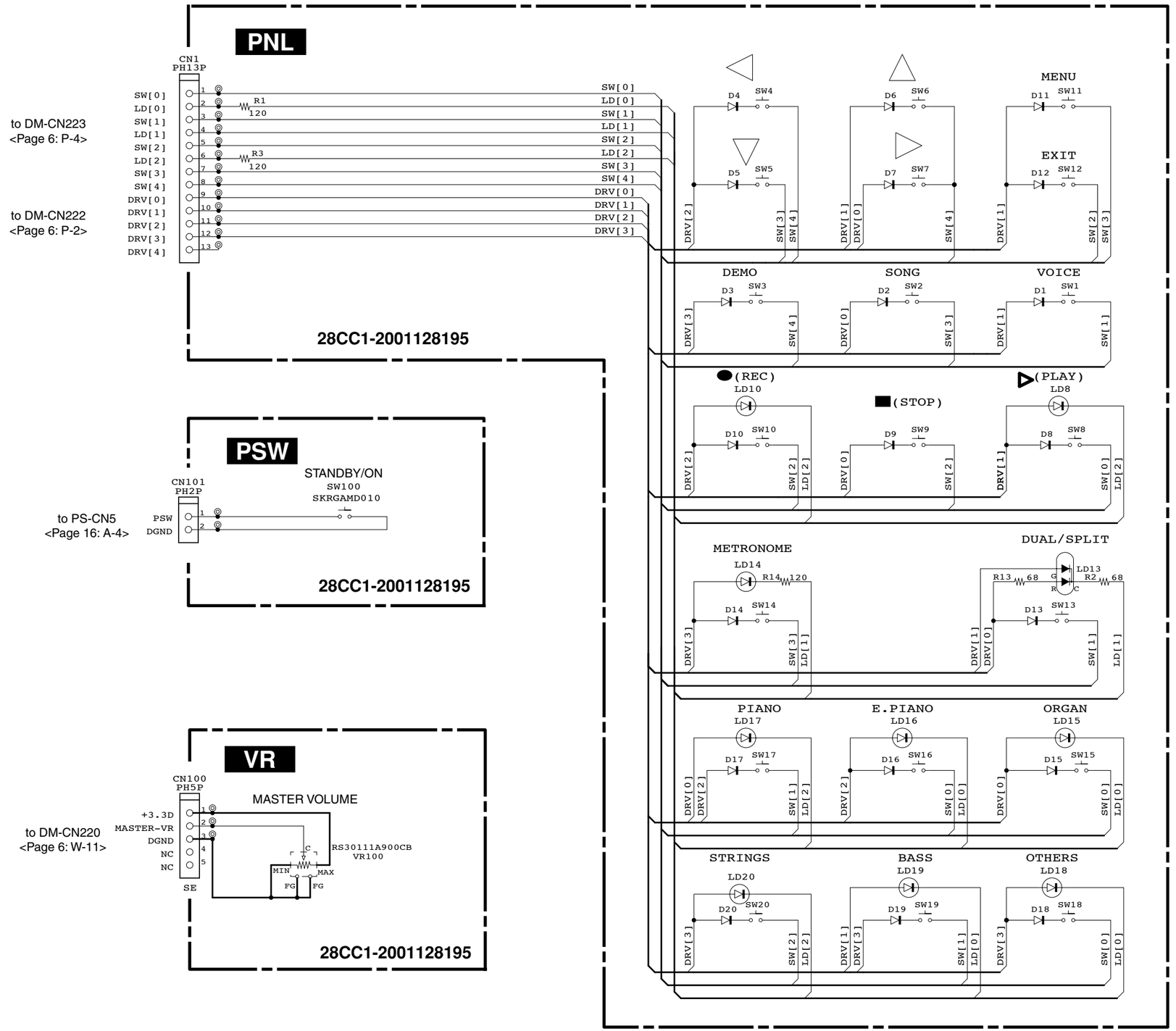




■ PN (PNL, PSW, VR) CIRCUIT DIAGRAM (CLP-565GP/CLP-565GPWH)

# ■ PS CIRCUIT DIAGRAM (CLP-565GP/CLP-565GPWH)

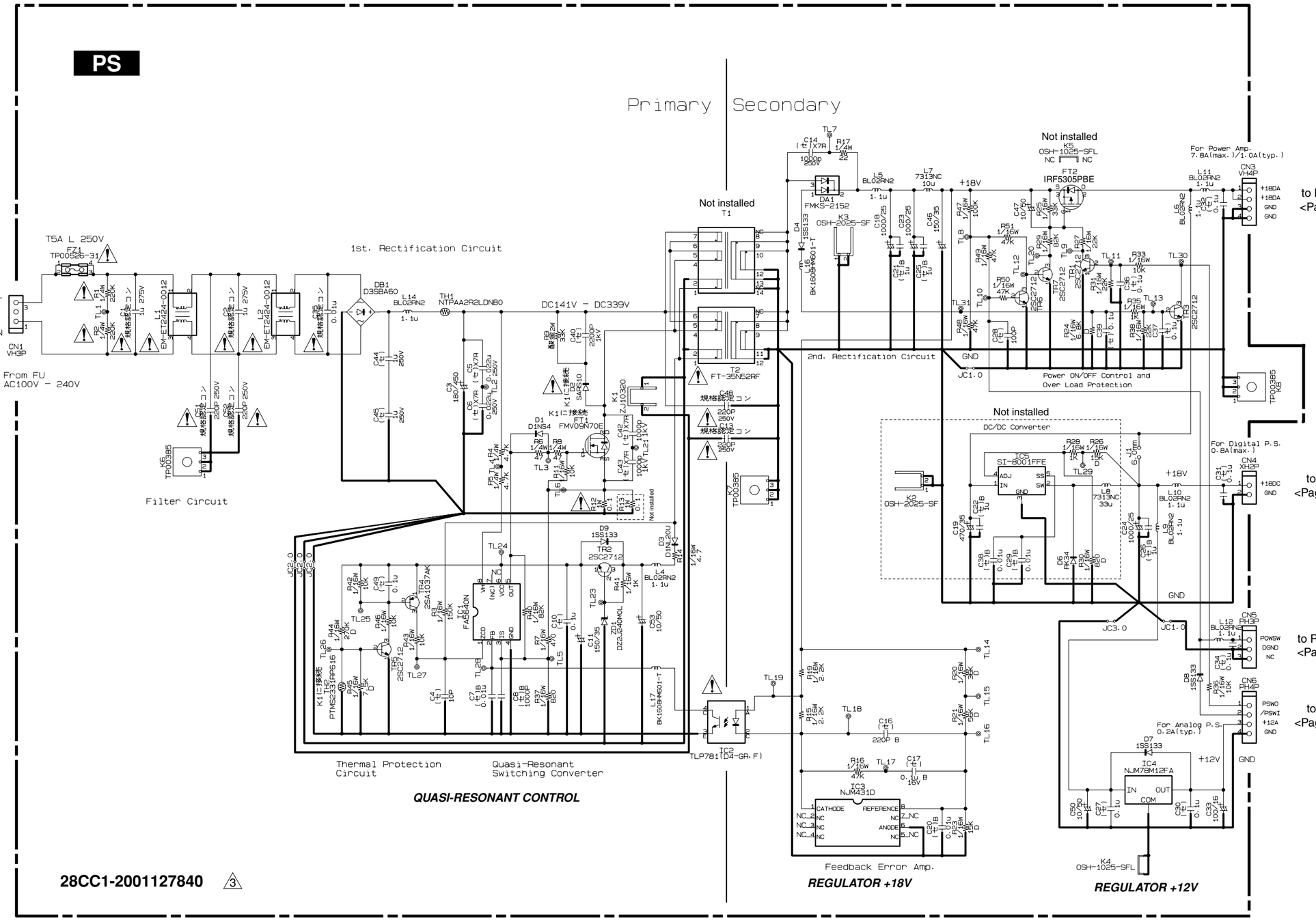




■ PS CIRCUIT DIAGRAM (CLP-565GP/CLP-565GPWH)

# ■ FU, PEDAL, PL CIRCUIT DIAGRAMS (CLP-565GP/CLP-565GPWH)

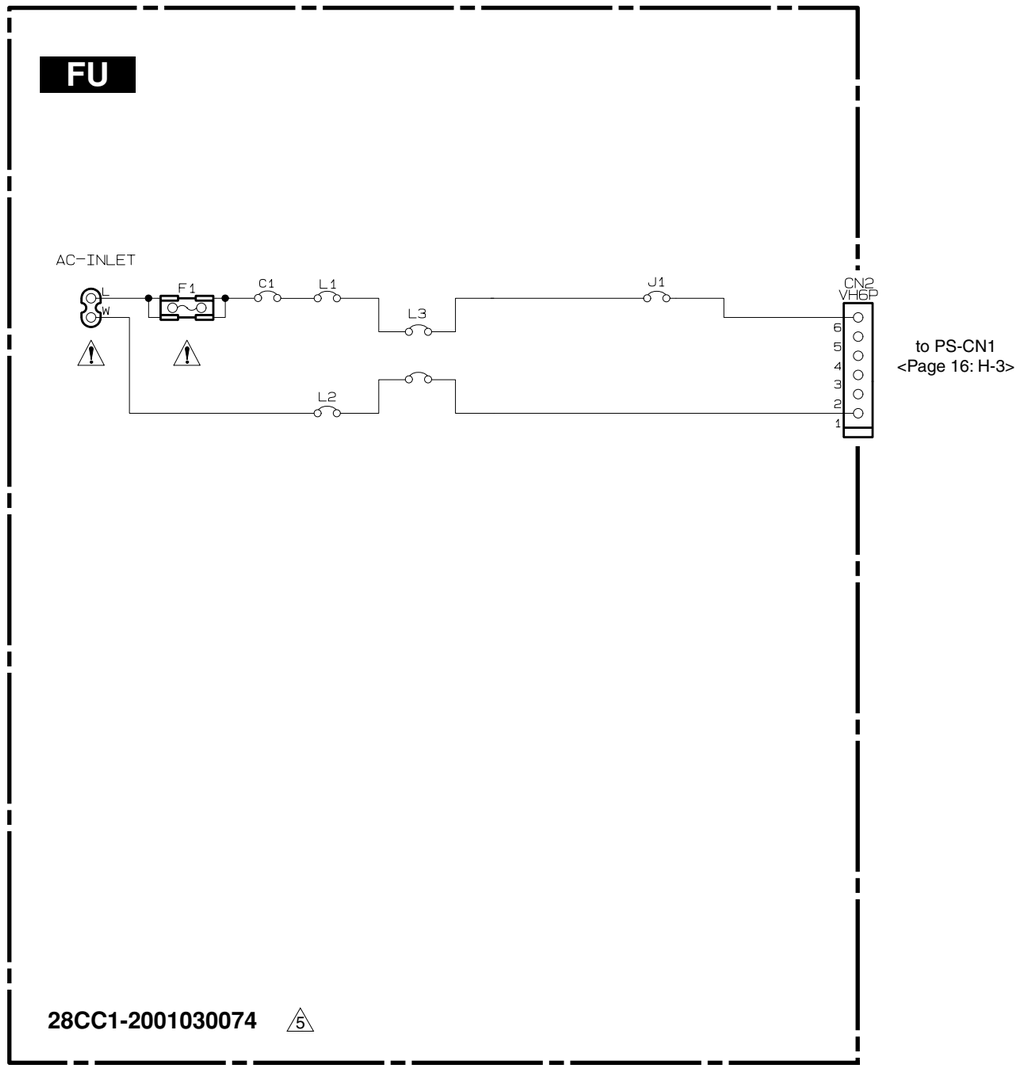


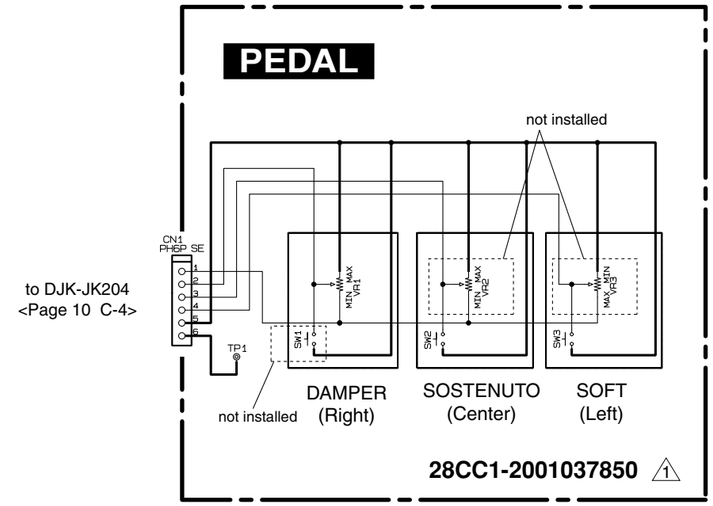


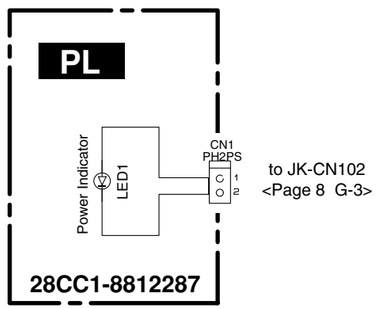




■ FU, PEDAL, PL CIRCUIT DIAGRAMS (CLP-565GP/CLP-565GPWH)