Clavinova

CLP-560

SERVICE MANUAL



■CONTENTS（目次）

SPECIFICATIONS（総合仕様）. 2
PANEL LAYOUT（パネルレイアウト）. 2
CIRCUIT BOARD LAYOUT（ユニットレイアウト）. 4
BLOCK DIAGRAM（ブロックダイアグラム）. 6
DISASSEMBLY PROCEDURE（分解手順）. 8
LSI PIN DESCRIPTION（LSI 端子機能表）. 16
IC BLOCK DIAGRAM（IC ブロック図）. 20
CIRCUIT BOARDS（シート基板図）. 22
TEST PROGRAM（テストプログラム）. 30/31
MIDI DATA FORMAT. 32
MIDI IMPLEMENTATION CHART. 33
PARTS LIST

SK 001430

YAMAHA CORP.
HAMAMATSU, JAPAN
3.615K-454 Ⓚ Printed in Japan '90.9

IMPORTANT NOTICE

This manual has been provided for the use of authorized Yamaha Retailers and their service personnel. It has been assumed that basic service procedures inherent to the industry, and more specifically Yamaha Products, are already known and understood by the users, and have therefore not been restated.

WARNING: Failure to follow appropriate service and safety procedures when servicing this product may result in personal injury, destruction of expensive components and failure of the product to perform as specified. For these reasons, we advise all Yamaha product owners that all service required should be performed by an authorized Yamaha Retailer or the appointed service representative.

IMPORTANT: The presentation or sale of this manual to any individual or firm does not constitute authorization, certification, recognition of any applicable technical capabilities, or establish a principle-agent relationship of any form.

The data provided is believed to be accurate and applicable to the unit(s) indicated on the cover. The research, engineering, and service departments of Yamaha are continually striving to improve Yamaha products. Modifications are, therefore, inevitable and changes in specification are subject to change without notice or obligation to retrofit. Should any discrepancy appear to exist, please contact the distributor's Service Division.

WARNING: Static discharges can destroy expensive components. Discharge any static electricity your body may have accumulated by grounding yourself to the ground buss in the unit (heavy gauge black wires connect to this buss).

IMPORTANT: Turn the unit OFF during disassembly and parts replacement. Recheck all work before you apply power to the unit.

WARNING: CHEMICAL CONTENT NOTICE!

The solder used in the production of this product contains LEAD. In addition, other electrical/electronic and/or plastic (where applicable) components may also contain traces of chemicals found by the California Health and Welfare Agency (and possibly other entities) to cause cancer and/or birth defects or other reproductive harm.

DO NOT PLACE SOLDER, ELECTRICAL/ELECTRONIC OR PLASTIC COMPONENTS IN YOUR MOUTH FOR ANY REASON WHAT SO EVER!

Avoid prolonged, unprotected contact between solder and your skin! When soldering, do not inhale solder fumes or expose eyes to solder/flux vapor!.

If you come in contact with solder or components located inside the enclosure of this product, wash your hands before handling food.

CLP-560

■SPECIFICATIONS

	CLP-560
KEYBOARD	88 KEYS (A-1 ~ C7)
VOICE SELECTORS	PIANO 1/2, CLAVINOVA TONE, E.PIANO, HARPSICHORD, VIBES, STRINGS, ORGAN
BRILLIANCE	MELLOW, NORMAL, BRIGHT
REVERB	Type: PEDAL, ROOM, HALL
PLAY MODES	NORMAL, DUAL
PEDAL CONTROLS	DAMPER, SOFT, SOSTENUTO
OTHER CONTROLS	MASTER VOLUME, MIDI/TRANSPOSE
JACKS/CONNECTORS	HEADPHONES, AUX OUT L/MONO & R, OPTIONAL IN L/R, OPTIONAL OUT L/R, MIDI IN/OUT/THRU
INPUT &OUTPUT LEVEL/IMPEDANCE	AUX OUT: 600-300 Ω/-7 dBm OPTIONAL OUT: 600 Ω/1~4 Vpp OPTIONAL IN: 22 kΩ/-10 dBm (for nominal output level)
MAIN AMPLIFIERS	30 W x 2
SPEAKERS	13 cm x 2, 5 cm x 2
DIMENSIONS	1418 x 467 x 804 mm
WEIGHT	56.0 kg (123.4 lbs.)

● **OUTPUT LEVEL :** HEADPHONES : +17±3 dBm
OPTIONAL OUT : +6±3 dBm
(When a sine wave of A3 sounds on test program mode. See "TEST PROGRAM" on this manual.)

■総合仕様

●鍵盤： 88鍵(A_{-1}～C_7)イニシャルタッチ付
●音色： ピアノ1、ピアノ2、クラビノーバトーン、エレクトリックピアノ、ハープシコード、バイブ、ストリングス、オルガン
●効果・機能： ブリリアンス、リバーブ、トランスポーズ、ピッチコントロール、デュアル
●コントロール：電源スイッチ、ボリューム、ソフトペダル、ソステヌートペダル、ダンパーペダル
●付属端子： ヘッドホン端子、
オプショナル端子 IN(L,R)、OUT(L,R)、
AUX出力端子 OUT(L/L+R,R)、
MIDI端子(IN, OUT, THRU)
●メインアンプ：30W×2
●スピーカー： (13cm+5cm)×2
●定格電源： AC100V 50/60Hz
●消費電力： 55W
●外装： 仕上げ；ブラック／ブラックローズウッド調仕上げ、
間口…141.8cm、奥行…46.7cm、
高さ…80.4cm、重量…56.0kg
●装備： スライド式キーカバー、折りたたみ式譜面立て
●出力レベル： ヘッドホン端子 ：+17±3dBm
OPTIONAL OUT端子：+6±3dBm
(テストプログラムにおいて、A3のサイン波発音時。テストプログラムの項を参照。)

■PANEL LAYOUT（パネルレイアウト）

● **Front Panel**（フロントパネル）

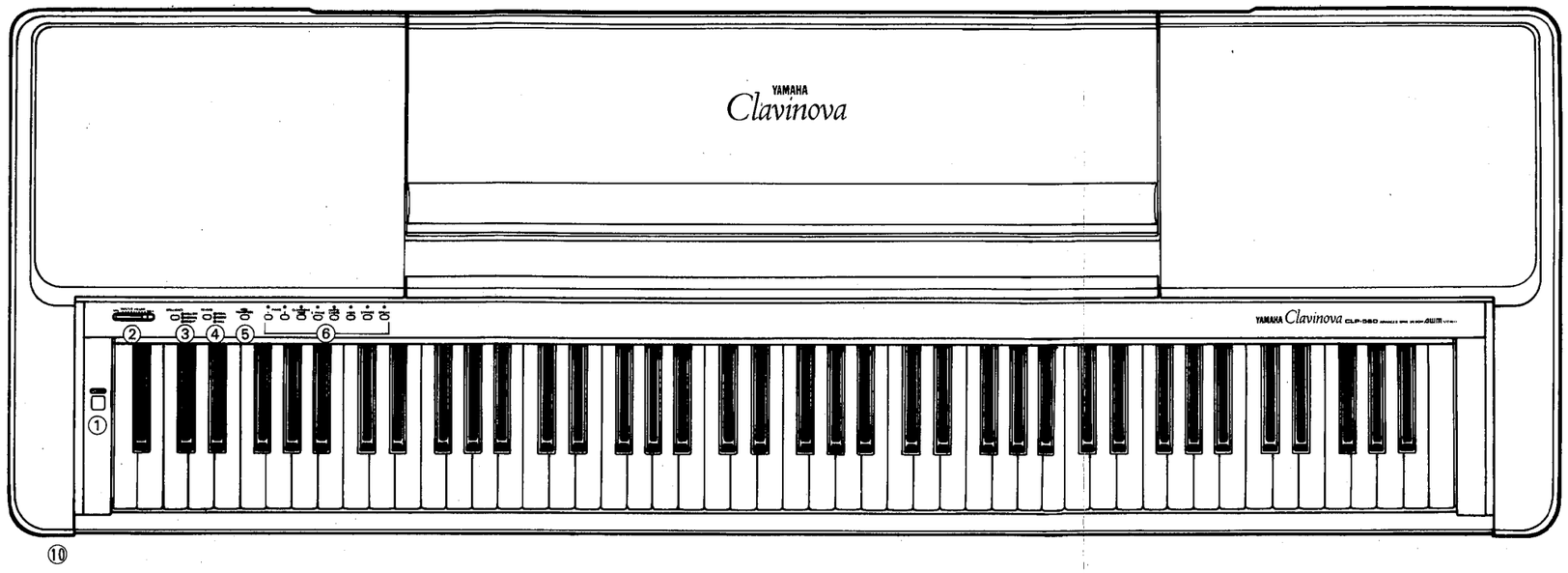

● **Control Panel**（コントロールパネル）



● **Rear Panel**（リアパネル）

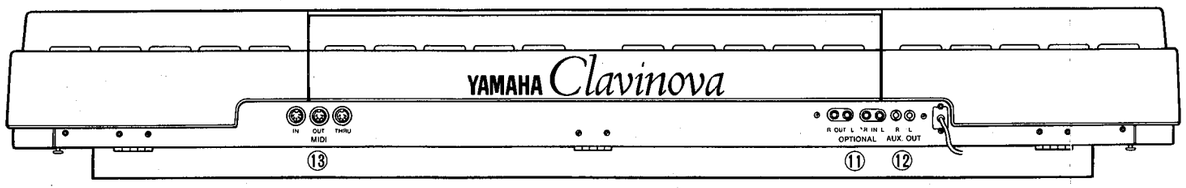

● **Pedal**（ペダル）

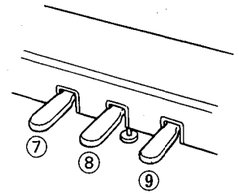

① [POWER] Switch
② [MASTER VOLUME] Control
③ [BRILLIANCE] Button
④ [REVERB] Button
⑤ [MIDI/TRANSPOSE] Button
⑥ Voice Selectors
⑦ Soft Pedal
⑧ Sostenuto Pedal
⑨ Damper Pedal
⑩ HEADPHONE Jack
⑪ OPTIONAL IN L/R and OUT L/R Jacks
⑫ AUX. OUT L/R Jacks
⑬ MIDI IN, THRU and OUT Connectors

① POWER スイッチ
② MASTER VOLUME コントロール
③ BRILLIANCE ボタン
④ REVERB ボタン
⑤ MIDI/TRANSPOSE ボタン
⑥ ボイスセレクター
⑦ ソフトペダル
⑧ ソステヌートペダル
⑨ ダンパーペダル
⑩ ヘッドホンジャック
⑪ OPTIONAL IN L, R と OUT L, R ジャック
⑫ AUX. OUT L, R ジャック
⑬ MIDI IN, THRU, OUT 端子

CLP-560

■CIRCUIT BOARD LAYOUT（ユニットレイアウト）

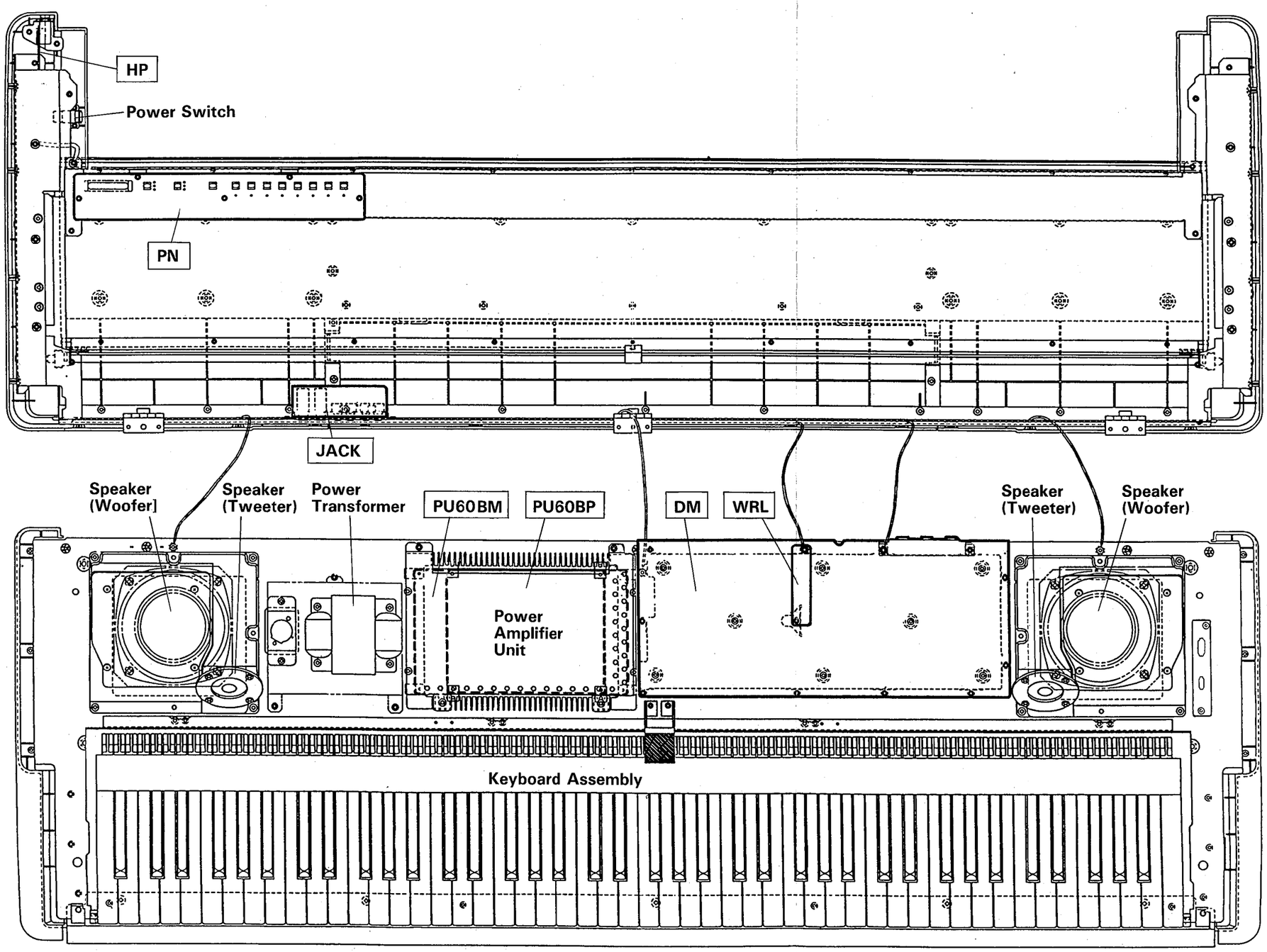

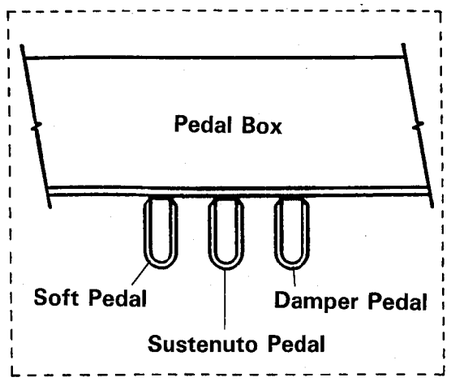

CLP-560

■BLOCK DIAGRAM（ブロックダイアグラム）

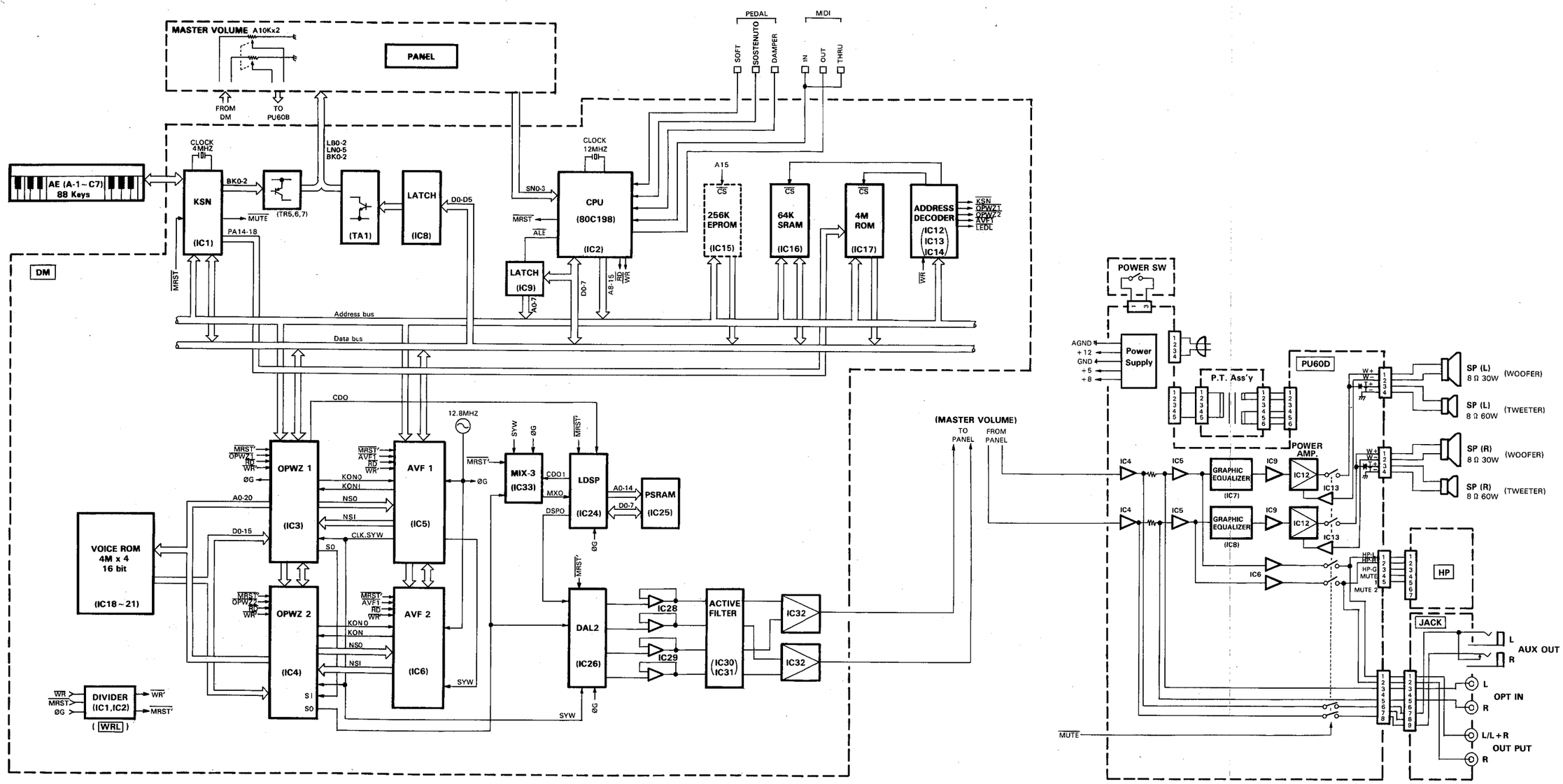

■DISASSEMBLY PROCEDURE（分解手順）

1 Opening the Top Board

1-1 Open the slide cover Assembly.

1-2 Remove the four (4) screws marked in the figure as Ⓐ(4.0X20 bind head screw). (Fig. 1)

1-3 Lift the top board from the front and pass strings through two angle brackets and both end of the front rail so that hinges are not damaged as shown in the figure. (Fig. 2)

CAUTION: MAKING SURE THAT THE TOP BOARD CAN NOT FALL.

This will give you access to the DM, WRL, JACK, PN and HP circuit boards.

1 屋根の開け方

1-1 スライド蓋Ass'yを開けておきます。

1-2 Ⓐのネジ4本(4.0×20 バインド小ネジ)を外します。(図1参照)

1-3 屋根の手前側を持ち、矢印の方向に回転させながら開きます。(図2参照)

注1) 屋根を開き過ぎて、背面の蝶番を壊さないように、腕木金具（左、右）と口金Ass'yの両端をそれぞれ紐で結び、屋根を固定します。(図2参照)

注2) 屋根を開けると、次のように各シートをチェックが出来ます。

Ⅰ) DMシートの部品側

Ⅱ) PNシートパターン側

Ⅲ) JACK シートの部品側とパターン側

Ⅳ) HPシートの部品側とパターン側

Ⅴ) WRLシートの部品側

Under View（下側より）

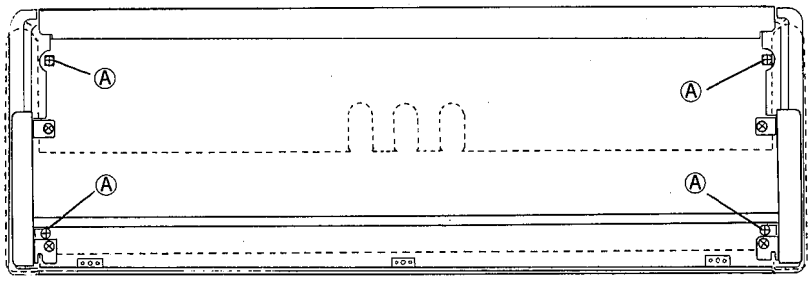

(Fig. 1)

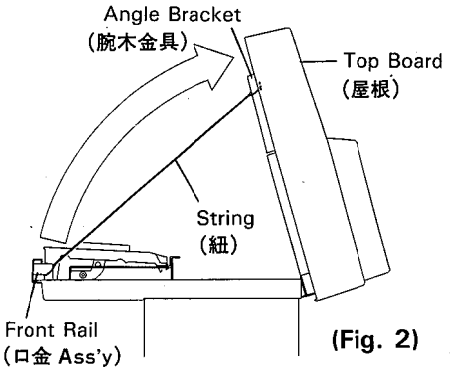

(Fig. 2)

2 DM Circuit Board Removal

2-1 Open the top board. (see procedure 1 - Opening the Top Board)

2-2 Remove the WRL circuit board. (see procedure 17)

2-3 Remove the ten (10) screws marked Ⓑ(3.0X10 bind head screw), then the DM circuit board can be removed. (Fig. 3)

2 DMシートの外し方

2-1 屋根を開けます。(1項参照)

2-2 WRLシート外します。(17項参照)

2-3 Ⓑのネジ10本(3.0×10 バインド小ネジ)を外し、DMシートを外します。(図3参照)

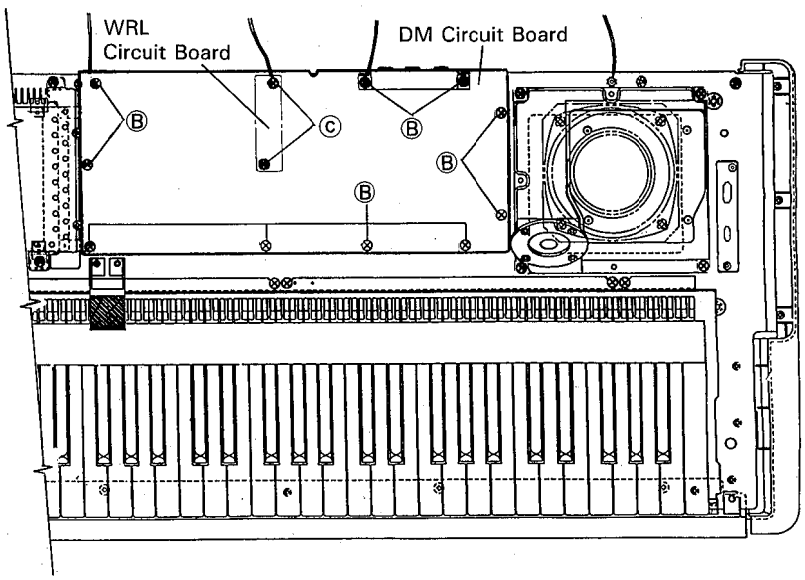

(Fig. 3)

3 PN Circuit Board Removal

3-1 Pull out the MASTER VOLUME control knob located on the control panel.
3-2 Open the top board. (see procedure 1)
3-3 Remove the five (5) screws marked Ⓒ (3.0X6 bind head screw), then the PN circuit board can be removed. (Fig. 4)

4 HP Circuit Board Removal

4-1 Open the top board. (see procedure 1)
4-2 After the two (2) screws marked Ⓓ (3.0 X 8 bind head screw) have been removed, then the HP circuit board can be removed. (Fig. 4)

5 Power Switch Removal

5-1 Open the top board. (see procedure 1)
5-2 Remove the two (2) screws marked Ⓔ (3.0X8 bind head tapping screw), the power switch can be removed. (Fig. 4)

3 PNシートの外し方

3-1 コントロールパネル側より、マスターボリュームツマミを抜いておきます。
3-2 屋根を開けます。(1項参照)
3-3 Ⓒのネジ5本 (3.0×6 バインド小ネジ) を外し、PNシートを外します。(図4参照)

4 HPシートの外し方

4-1 屋根を開けます。(1項参照)
4-2 Ⓓのネジ2本(3.0×8 バインドタッピングネジ)を外し、HPシートを外します。(図4参照)

5 パワースイッチの外し方

5-1 屋根を開けます。(1項参照)
5-2 Ⓔのネジ2本(3.0×8 バインドタッピングネジ)を外し、パワースイッチを外します。(図4参照)

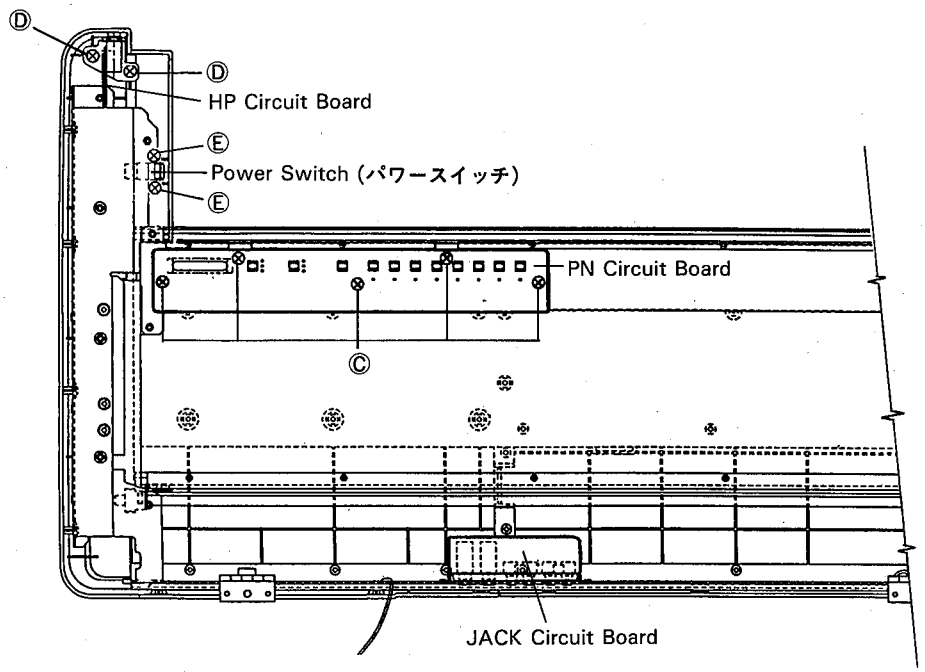

(Fig. 4)

6 JACK Circuit Board Removal

6-1 Remove the two (2) screws marked Ⓕ(3.0X8 bind head screw) located on the rear panel. (Fig. 5)

6-2 Open the top board. (see procedure 1)
Then the JACK circuit board can be removed.

6 JACKシートの外し方

6-1 背面框側から、Ⓕのネジ2本(3.0×8バインド小ネジ)を外します。(図5参照)

6-2 屋根を開けて、JACKシートを外します。(1項参照)

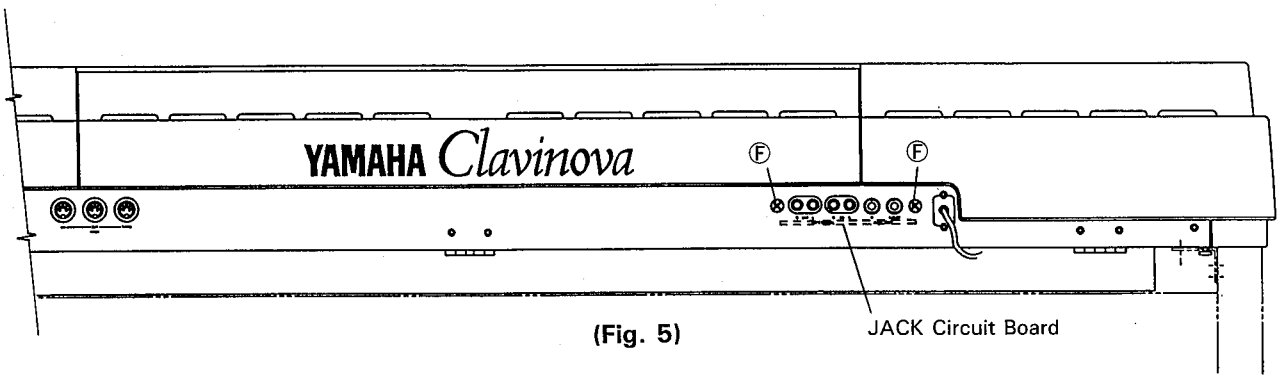

(Fig. 5)

7 Power Transformer Removal

7-1 Open the top board. (see procedure 1)

7-2 For the U.S. model only: Remove the four (4) screws marked Ⓖ(3.5X12 bind head tapping screw) and then remove the shield cover. (Fig. 6)

7-3 Remove the four (4) screws marked Ⓗ(4.0X14 bind head screw), then the power transformer can be removed. (Fig. 6)

7 電源トランスの外し方

7-1 屋根を開けます。(1項参照)

7-2 Ⓗ のネジ4本 (4.0×14 バインド小ネジ) を外し、電源トランスを外します。(図6参照)

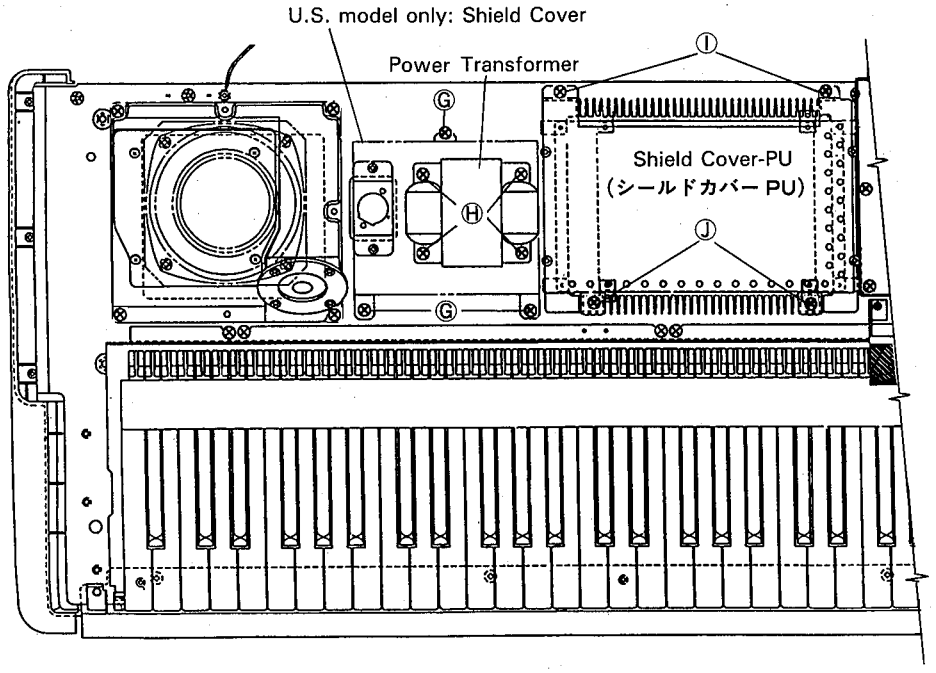

(Fig. 6)

8 Power Amplifier Unit Removal

8-1 Open the top board. (see procedure 1)

8-2 Remove the two (2) screws marked ① (3.5X12 bind head tapping screw) and two (2) screws marked Ⓙ (5.0X8 bind head tapping screw), the shield cover-PU can be removed. (Fig. 6)

8-3 Remove the two (2) screws marked Ⓚ(4.0X14 bind head screw), the power amplifier unit can be removed. (Fig. 7)

9 PU60BP Circuit Board Removal

9-1 Open the top board. (see procedure 1)

9-2 Remove the shield cover-PU. (see procedure 8-2)

9-3 After the four (4) screws marked Ⓛ (3.0X6 bind head screw) have been removed, the PU60BP circuit board can be removed. (Fig. 7)

10 PU60BM Circuit Board Removal

10-1 Open the top board.(see procedure 1)

10-2 Remove the power amplifier unit and then remove the PU60BP circuit board, you can check the component side and pattern side of the PU60BM circuit board. (see procedures 8 and 9)

10-3 Remove the five (5) screws marked ⓐ(3.0X30 pan head screw). (Fig. 7-1)

10-4 Remove the four (4) screws marked ⓑ(3.0X6 bind head screw), then the PU60BM circuit board can be removed from the heat sink. (Fig. 7-1)

8 PU60Bシート Ass'yの外し方

8-1 屋根を開けます。(1項参照)

8-2 ①のネジ2本 (3.5×12 バインドタッピングネジ) と Ⓙのネジ2本 (5.0×8 バインドタッピングネジ) を外し、シールドカバーPUを外します。(図6参照)

8-3 Ⓚのネジ4本(4.0×14バインド小ネジ)を外し、PU60Bシート Ass'yを外します。(図7参照)

9 PU60BPシートの外し方

9-1 屋根を開けます。(1項参照)

9-2 シールドカバーPUを外します。(8-2項参照)

9-3 Ⓛのネジ4本(3.0×6バインド小ネジ)を外し、PU60BPシートを外します。(図7参照)

10 PU60BMシートの外し方

10-1 屋根を開けます。(1項参照)

10-2 PU60Bシート Ass'yを外し、PU60BPシートを外すと、PU60BMシートの部品面とパターン面の両面をチェックできます。(8,9項参照)

10-3 ⓐのネジ5本 (3.0×30 ナベ小ネジ) を外します。(図7-1参照)

10-4 ⓑのネジ4本(3.0×6バインド小ネジ) を外し、放熱板からPU60BMシートを外します。(図7-1参照)

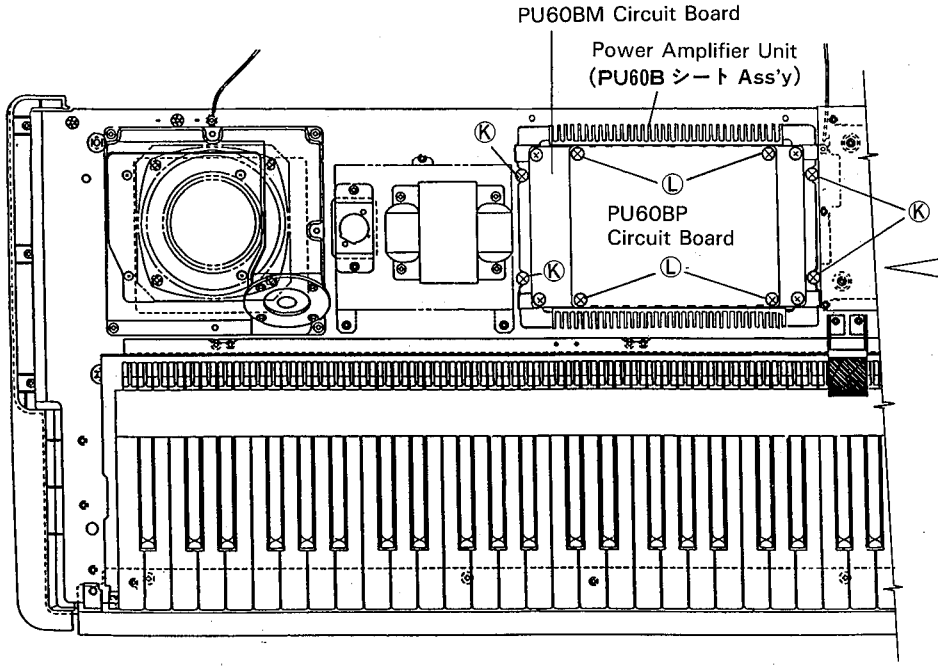

(Fig. 7)

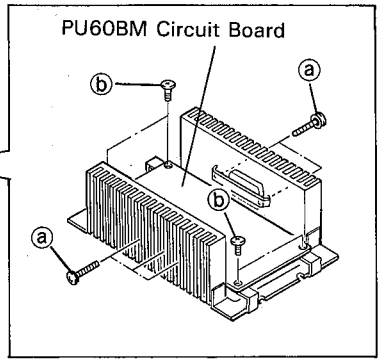

(Fig. 7-1)

11 L and R Tweeters Removal

11-1 Open the top board. (see procedure 1)

11-2 There are eight (8) screws marked Ⓜ (4.0X10 bind head tapping screw), four (4) on the L tweeter, speaker and four (4) on the R tweeter. (Fig. 8)

11-3 After these screws have been removed, L and R tweeters can be removed.

12 L and R Woofers Removal

12-1 Open the top board. (see procedure 1)

12-2 To remove the L and R speaker boxes, remove the eight (8) screws marked Ⓝ (4.0X18 bind head screw), four (4) on the left and four (4) on the right. (Fig. 8)

12-3 There are eight (8) screws marked Ⓞ (4.0X18 cup screw), four (4) on the L woofer, speaker and four (4) on the R woofer. (Fig. 8)

After these screws have been removed, the L and R woofers can removed.

11 スピーカー（ツィータ）L、Rの外し方

11-1 屋根を開けます。(1項参照)

11-2 Ⓜ のネジ各4本 (4.0×10 バインドタッピングネジ) を外し、スピーカー(ツィータ)L、Rをそれぞれ外します。(図8参照)

12 スピーカー（ウーファ）L、Rの外し方

12-1 屋根を開けます。(1項参照)

12-2 Ⓝ のネジ各4本 (4.0×18 バインド小ネジ) を外し、スピーカーボックスL、Rをそれぞれ外します。(図8参照)

12-3 Ⓞ のネジ各4本(4.0×18 カップスクリュー)を外し、スピーカー(ウーファ)L、Rをそれぞれ外します。(図8参照)

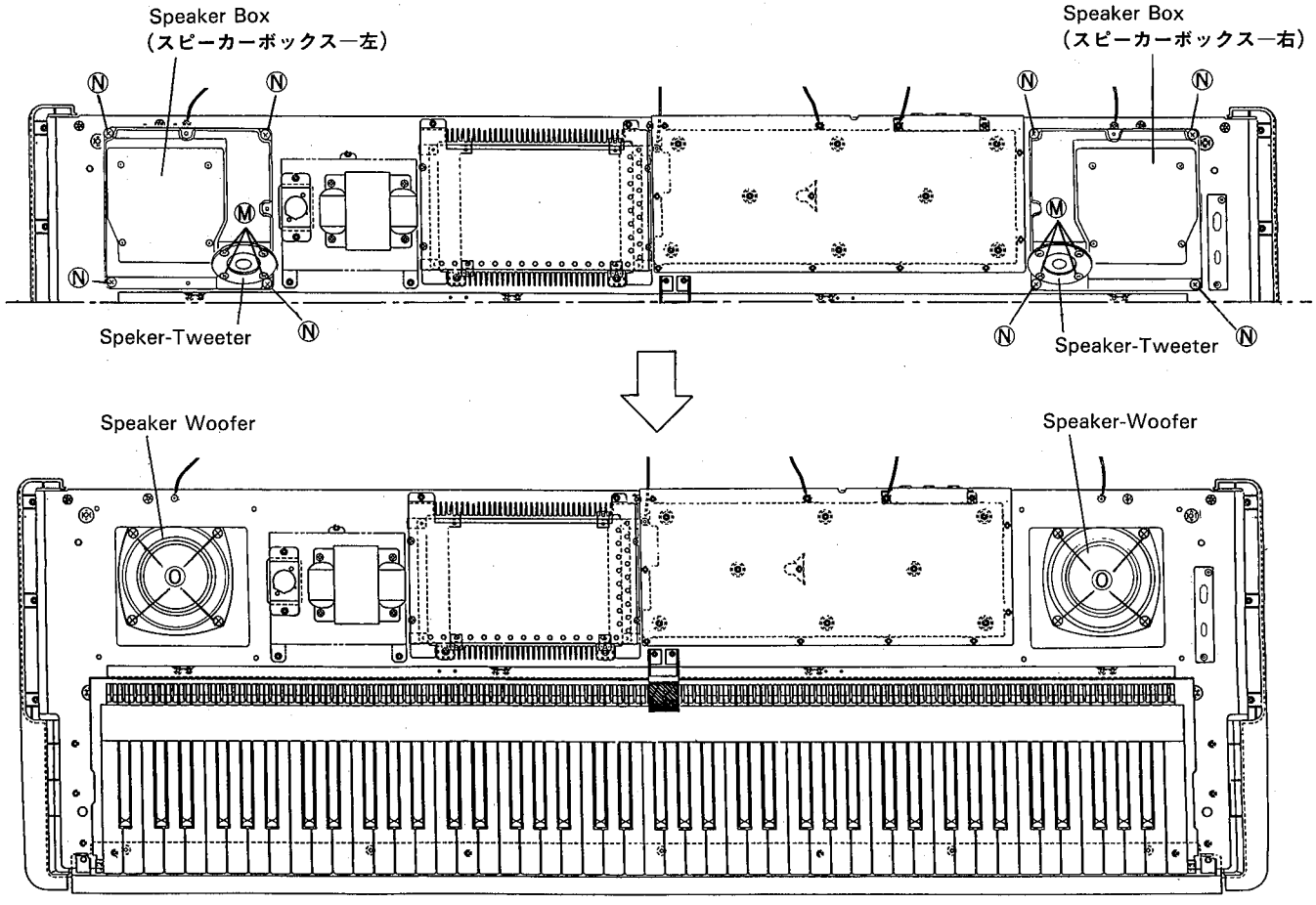

(Fig. 8)

13 Keyboard Assembly Removal

13-1 Open the top board. (see procedure 1)

13-2 Remove the five (5) screws marked Ⓟ (5.0X20 bind head screw) located under the keybed. (Fig. 9)

13-3 After the four (4) screws marked Ⓠ (4.0X14 bind head screw) and four (4) screws marked Ⓡ (3.5X12 bind head tapping screw) have been removed, the keyboard assembly can be removed. (Fig. 9)

13-4 Remove the circuit board marked Ⓢ and key spring marked Ⓣ. (Fig. 10)

13-5 Remove the white key marked Ⓤ and hammer assembly marked Ⓥ. (Fig. 11)

13-6 The black key can be removed in same manner as these steps.

13 鍵盤Ass'yの外し方とその分解

13-1 屋根を開けます。(1項参照)

13-2 棚板裏側の Ⓟ のネジ5本 (5.0×20 バインド小ネジ) を外します。(図9参照)

13-3 Ⓠ のネジ4本 (4.0×14バインド小ネジ) と Ⓡ のネジ4本 (3.5×12 バインドタッピングネジ) を外し、鍵盤Ass'yを外します。(図9参照)

13-4 基板 Ⓢ を外し、鍵バネ Ⓣ を外します。(図10参照)

13-5 白鍵 Ⓤ を外し、ハンマーAss'y Ⓥ を外します。(図11参照)

13-6 黒鍵も同様に外すことが出来ます。

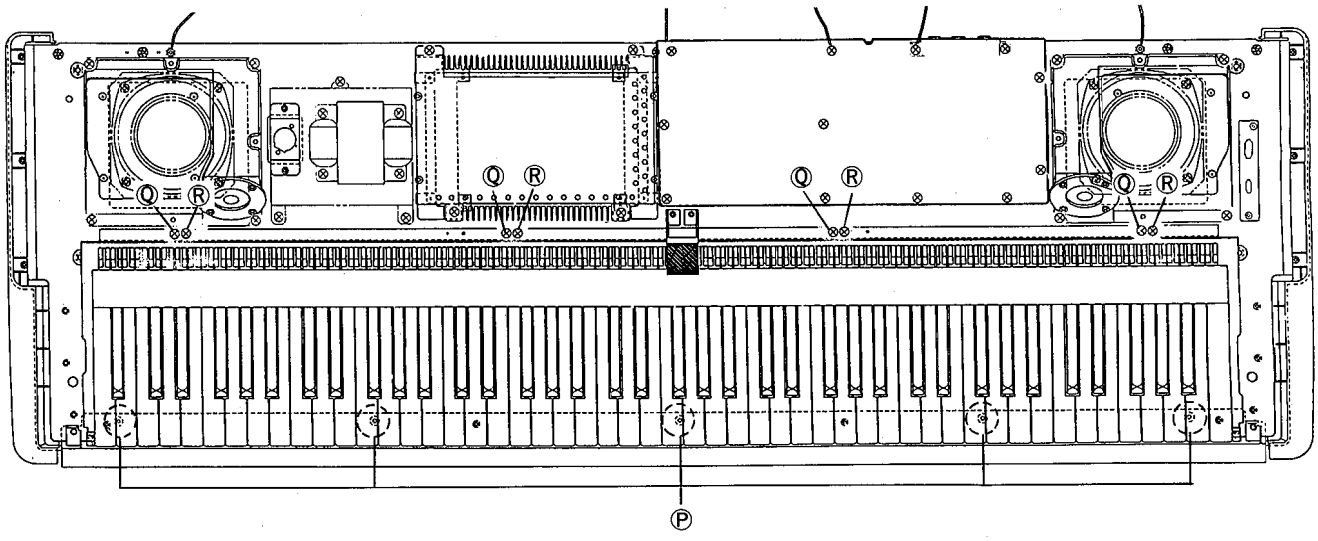

(Fig. 9)

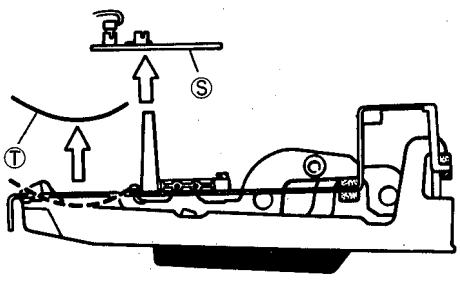

(Fig. 10)

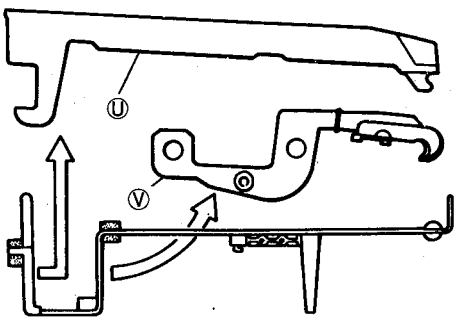

(Fig. 11)

14 Pedal Assembly Removal

14-1 To make it easier to remove the pedal assembly, place a soft blanket or similar material on the floor, gently place the rear of the unit on it.

14-2 The pedal assembly can be removed by removing the five (5) screws marked Ⓦ (4.0X14 bind head tapping screw). (Fig. 12)

14 ペダルAss'yの外し方

14-1 CLP-560本体の背面が下になるように本体を静かに倒します。

注）作業には、床に布などを敷いて本体を傷つけないように注意して下さい。

14-2 Ⓦ のネジ5本 (4.0×14 バインドタッピングネジ) を外し、ペダルAss'yを外します。(図12参照)

Under View (下側より)

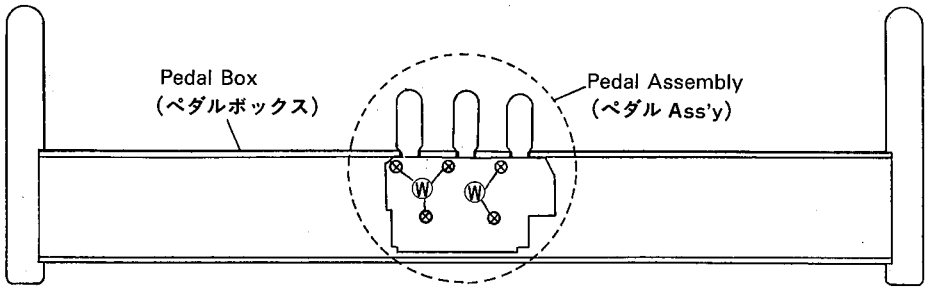

(Fig. 12)

15 CLP-560 Main Unit Removal

15-1 Disconnect the PK cable. (Fig. 13)

15-2 Remove the four (4) screws marked Ⓧ (6.0X14 bind head screw), two (2) on the left side and two on the right side. After these screws have been removed, lift the unit upward slightly and then slide it toward the back, then raise it. (Fig. 13)

15 CLP-560本体の外し方

15-1 棚板裏側のコネクターから、PKケーブルを外します。(図13参照)

15-2 スタンドAss'yと本体を止めている Ⓧ のネジ4本(6.0×14 バインド小ネジ) を外し、少し本体を持ち上げながら後方にずらした後、持ち上げて外します。(図13参照)

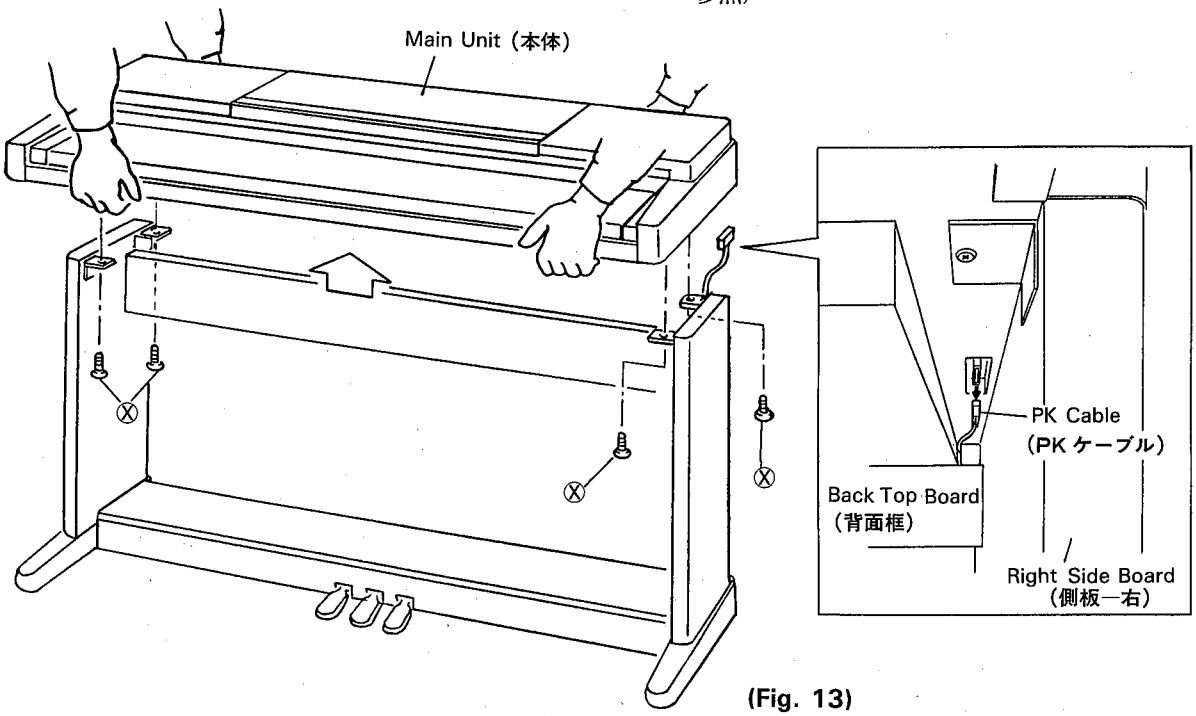

(Fig. 13)

16 Slide Cover Assembly Removal

16-1 Open the top board. (see procedure 1)

16-2 Remove the four (4) screws marked Ⓨ(3.0X8 bind head tapping screw), then the control panel can be removed. (Fig. 14)

16-3 There are six (6) screws marked Ⓩ(4.0X8 bind head screw), three (3) on the L slide guide and three (3) on the R slide guide. (Fig. 14)

16-4 After these screws and L and R slide guides have been removed, the slide cover assembly can be taken out of the unit in the direction of the arrow as shown in the Fig. 16.

16 スライド蓋Ass'yの外し方

16-1 屋根を開けます。(1項参照)

16-2 Ⓨのネジ4本 (3.0×8 バインドタッピングネジ) を外し、コントロールパネルを外します。(図14参照)

16-3 Ⓩのネジ左右各3本(4.0×8バインド小ネジ)を外し、スライドガイド (左) とスライドガイド (右) を取り外します。(図15参照)

16-4 スライド蓋Ass'yを矢印の方向にスライドさせて取り外します。(図16参照)

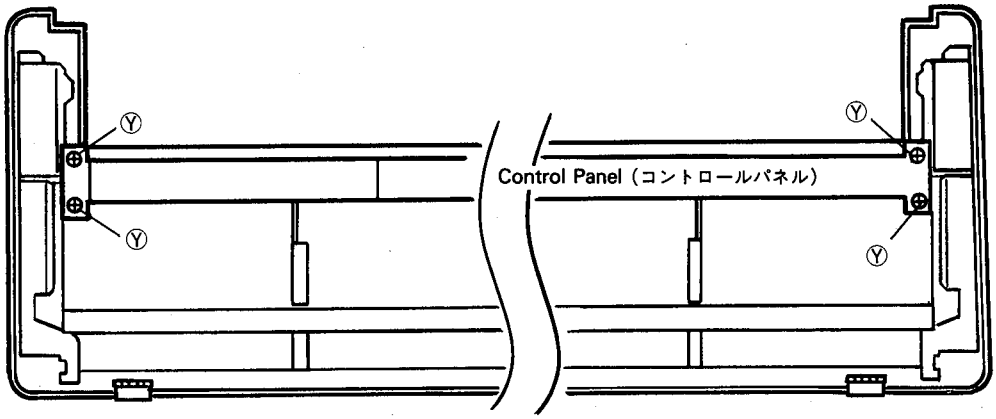

(Fig. 14)

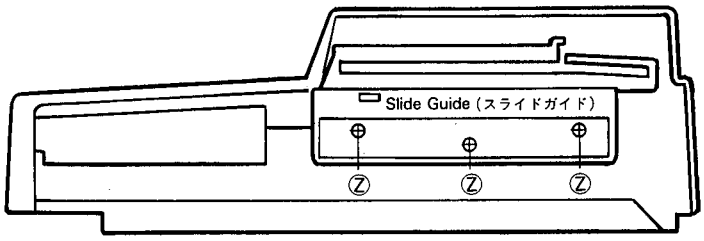

(Fig. 15)

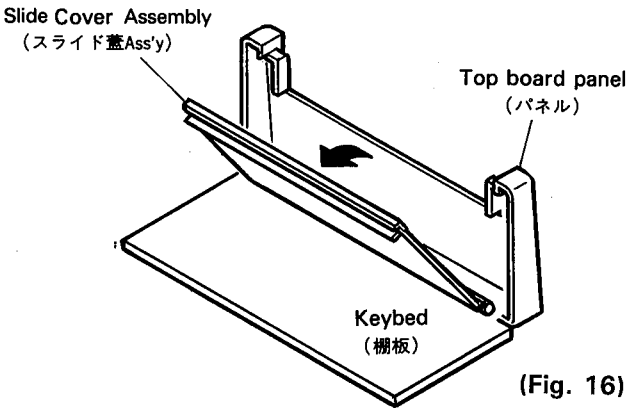

(Fig. 16)

17 WRL Circuit Board Removal

17-1 Open the top board. (see procedure 1)

17-2 Remove the two (2) screws marked ⓒ(3.0X20 bind head screw), then the WRL circuit board can be removed. (Fig.3)

17 WRLシートの外し方

17-1 屋根を開けます。(1項参照)

17-2 ⓒのネジ2本(3.0×20 バインド小ネジ)を外し、WRLシートを外します。(図3参照)

■LSI PIN DESCRIPTION (LSI端子機能表)

● S83C198-R0012 (XI071A00) CPU (Central Processing Unit)

Pin No.	Name	I/O	Function	Pin No.	Name	I/O	Function
1	AD1	I/O	Address/Data bus	41	HS12	I	Inputs to high speed input unit
2	AD0	I/O		42	VSS		
3	$\overline{RD}$	O	Read signal	43	HS13	I	
4	ALE	O	Address latch enable	44	HSO0	O	Outputs from high speed output unit
5	INST	O	Output high during an external memory read indicates the read is an instruction fetch.	45	HSO1	O	
6	VSS			46	NC		
7	NC			47	NC		
8	XTAL2	O	Output of the oscillator inverter	48	NC		
9	XTAL1	I	Input of the oscillator inverter	49	NC		
10	VSS		Digital circuit ground	50	HSO2		
11	VSS			51	VSS		Digital circuit ground
12	VCC		Main supply voltage	52	VCC		Main supply voltage
13	VCC			53	HSO3	O	Output from high speed output unit
14	$\overline{EA}$	I	Input for memory select	54	VSS		Digital circuit ground
15	VSS		Digital circuit ground	55	VSS		
16	NC			56	VPP	I	Timing pin for the return from power down circuit
17	NC			57	NC		
18	NC			58	P2.5	I/O	Port 2
19	NC			59	$\overline{WR}$	O	Write output
20	ACH6	I	Port 0 (Analog input)	60	NC		
21	ACH7	I		61	P2.4	I/O	Port 2
22	NC			62	READY	I	Ready input
23	ACH5	I		63	VSS		
24	ACH4	I		64	P2.3	I/O	Port 2
25	AGND	I	Reference ground for A/D converter	65	A15	I/O	Address bus
26	VREF	I	Reference voltage for A/D converter	66	A14	I/O	
27	VSS			67	A13	I/O	
28	EXTINT/P2.2		External interrupt	68	A12	I/O	
29	VCC			69	A11	I/O	
30	$\overline{RESET}$	I	Reset	70	A10	I/O	
31	RXD	I	Serial port reception	71	A9	I/O	
32	TXD	O	Serial port transmission	72	A8	I/O	Address/Data bus
33	VSS		Digital circuit ground	73	AD6	I/O	
34	NC			74	AD6	I/O	
35	NC			75	VCC		
36	NC			76	AD5	I/O	
37	NC			77	AD4	I/O	
38	NC			78	AD3	I/O	
39	HSI0	I	Inputs to high speed input unit	79	VSS		
40	HSI1	I		80	AD2	I/O	

• YSF206 (XI069A00) AVF1 (Advanced Vector Filter)

Pin No.	Name	I/O	Function	Pin No.	Name	I/O	Function
1	D6	I/O		51	VD5	I	
2	NC			52	NC		
3	NC			53	NC		
4	NC			54	NC		
5	NC	I/O	Data bus	55	VD6	I	
6	D5	I/O		56	VD7	I	Vpp data input
7	D4	I/O		57	VD8	I	
8	D3	I/O		58	VD9	I	
9	D2	I/O		59	VD10	I	
10	D1			60	NC		
11	NC			61	VD11	I	
12	DO	I/O		62	VD12	I	
13	GND		Ground	63	VD13	I	
14	GND			64	NC		
15	NC			65	NC		
16	NC			66	GND		Ground
17	$\overline{CS}$	I	Chip select	67	GND		
18	$\overline{WR}$	I	Write control	68	NC		
19	$\overline{RD}$	I	Read control	69	VD14	I	Vpp data input
20	S/M	I	Slave/Master	70	VD15	I	
21	A4	I		71	TEST IN	I	Test pin
22	A3	I		72	TEST OUT	O	
23	A2	I	Address bus	73	SO0		Serial data output
24	A1	I		74	SO1	O	
25	A0	I		75	HCLKO	O	Half clock output
26	NC			76	NC		
27	NC			77	NC		
28	NC			78	NC		
29	VNP	I	Vpp new parameter	79	$\overline{SYOD}$	O	Synchronizer output with delay
30	VFMO	I	Vpp filter mode	80	SSYO	O	Slow synchronizer
31	VFM1	I		81	FS	O	Frequency, sampling
32	VGM0	I	Vpp gain mode	82	$\overline{SYWI}$	I	Sychronizer input
33	VGM1	I		83	MCLKI	I	Master clock
34	VE/O	I	Vpp even/odd input	84	RNSI1	I	N-sys mix rear serial input
35	VCHO	I	Vpp channel input	85	NC		
36	NC			86	RNSIO	I	
37	VCH1	I		87	FNSI1	I	N-sys mix front serial input
38	VDD		Power supply	88	NC		
39	NC			89	NC		
40	VDD			90	VDD		
41	NC			91	VDD		
42	VCH2	I	Vpp channel input	92	NSI1	I	N-sys serial data input
43	NC			93	FNSI0	I	N-sys mix front serial input
44	VCH3	I		94	NC		
45	VD0	I	Vpp data input	95	NSI0	I	N-sys serial data input
46	VD1	I		96	$\overline{IC}$	I	Initial clear
47	NC			97	KOI	I	Key on input
48	VD2	I		98	NC		
49	VD3	I		99	KOO	O	Key on output
50	VD4	I		100	D7	I/O	Data bus

(* Vpp : Vector parameter processor)

• **YM7132** (XH235A00) OPWZ (AWM Tone Generator)

PIN NO.	NAME	I/O	FUNCTION	PIN NO.	NAME	I/O	FUNCTION
1	MELCK	O	Clock (3.2 MHz)	51	MA19	O	Wave memory address bus
2	CXOUT	O	Clock (6.4 MHz)	52	MA20	O	
3	XTAL		Crystal osc. connection	53	MA21	O	
4	EXTAL			54	MA22	O	
5	$\overline{CS}$	I	Chip select	55	MA23	O	
6	$\overline{RD}$	I	Read control	56	BOE	I	Address bus open enable
7	$\overline{WR}$	I	Write control	57	MD0	I/O	Wave memory data bus
8	$\overline{SYMWR}$	I/O	Register synch write control	58	MD1	I/O	
9	SYI/O	I	$\overline{SYW}$ in/out control	59	MD2	I/O	
10	A0	I	CPU address bus	60	MD3	I/O	
11	A1	I		61	MD4	I/O	
12	A2	I		62	MD5	I/O	
13	A3	I		63	MD6	I/O	
14	A4	I		64	MD7	I/O	
15	Vss		Ground	65	MD8	I/O	
16	D0	I/O	CPU data bus	66	Vss		Ground
17	D1	I/O		67	MD9	I/O	Wave memory data bus
18	D2	I/O		68	MD10	I/O	
19	D3	I/O		69	MD11	I/O	
20	D4	I/O		70	MD12	I/O	
21	D5	I/O		71	MD13	I/O	
22	D6	I/O		72	MD14	I/O	
23	D7	I/O		73	MD15	I/O	
24	TEO1	O	Test pin	74	NSI0	I	N-sys input 0
25	TEO2	O		75	NSO0	O	N-sys output 0
26	TEA2	I/O	Test pin	76	NSI1	I	N-sys input 1
27	NC			77	NSO1	O	N-sys output 1
28	NC			78	KONIN	I	Key on, $\overline{LFO}$ on input
29	NC			79	KONOUT	O	Key on, $\overline{LFO}$ on output
30	TESE	I/O	Test pin	80	SI0	I	Serial data input
31	MA0	O	Wave memory address bus	81	$\overline{SI1}$	I	
32	MA1	O		82	$\overline{CRS}$	O	CD counter reset
33	MA2	O		83	CDO	O	Control data
34	MA3	O		84	SO0	O	Serial data output
35	MA4	O		85	SO1	O	
36	MA5	O		86	SO2	O	
37	MA6	O		87	SO3	O	
38	MA7	O		88	TEAL	I/O	Test pin
39	MA8	O		89	TERE	I/O	
40	VDD		Power supply	90	VDD		Power supply
41	MA9	O	Wave memory address bus	91	TENR	I/O	Test pin
42	MA10	O		92	TEAE	I/O	
43	MA11	O		93	TEAR	I/O	
44	MA12	O		94	TEOE	I/O	
45	MA13	O		95	TEI2	I	Test pin
46	MA14	O		96	TEI1	I	
47	MA15	O		97	$\overline{IC}$	I	Initial clear
48	MA16	O		98	$\overline{IRQ}$	O	Interrupt request
49	MA17	O		99	M/S	I	SYNWR in/out control
50	MA18	O		100	$\overline{SYW}$	I/O	Synch signal

• YM6633 (XH543A00) KSN (Key Scanner)

PIN NO.	NAME	I/O	FUNCTION	PIN NO.	NAME	I/O	FUNCTION
1	XIN	I	Clock	33	DB0	I/O	Data bus
2	XOUT	O		34	DB1	I/O	
3	MK15	I	Keyboard 2nd make contact	35	DB2	I/O	
4	MK14	I		36	DB3	I/O	
5	MK13	I		37	DB4	I/O	
6	MK12	I		38	DB5	I/O	
7	MK11	I		39	DB6	I/O	
8	MK10	I		40	DB7	I/O	
9	MK05	I	Keyboard 1st make contact	41	AD0	I	Address bus
10	MK04	I		42	AD1	I	
11	MK03	I		43	AD2	I	
12	MK02	I		44	$\overline{CS}$	I	Chip select
13	MK01	I		45	$\overline{WR}$	I	Write control
14	MK00	I		46	$\overline{RD}$	I	Read control
15	BK0	O	Keyboard block	47	PA0	O	Port A
16	BK1	O		48	PA1	O	
17	BK2	O		49	PA2	O	
18	BK3	O		50	PA3	O	
19	BK4	O		51	PA4	O	
20	BK5	O		52	PA5	O	
21	BK6	O		53	PA6	O	
22	BK7	O		54	PA7	O	
23	Vss		Ground	55	TP	I	Test pin
24	BK8	O	Keyboard block	56	PB0	O	Port B
25	BK9	O		57	PB1	O	
26	BK10	O		58	PB2	O	
27	BK11	O		59	PB3	O	
28	BK12	O		60	PB4	O	
29	BK13	O		61	PB5	O	
30	BK14	O		62	XCLK	O	Clock for CDO
31	$\overline{IC}$	I	Initial clear	63	CDO	O	Control data
32	Vss		Ground	64	VDD		Power supply

• YM3028A (XE789A00) DAL2 (Digtal Analog Converter Logic)

PIN NO.	NAME	I/O	FUNCTION	PIN NO.	NAME	I/O	FUNCTION
1	VDD		Power supply	13	to Buff	O	Analog output to buffer amp.
2	SYW	I	Synch pulse	14	MP	I	Middle point 1/2 VDD bias
3	DGND		Digital ground	15	RC	O	Bias compensation
4	$\overline{CLK}$	I	Clock	16	RB	O	Bias—R
5	$\overline{CRASH}$	O	Crash detect	17	AGND		Analog ground
6	ZEROA	O	Zero detect	18	AVDD		Analog power supply
7	OUT 4	O	Analog signal output	19	LMTEM	I	Limiter enable
8	OUT 3	O		20	IN 1	I	Digital data input
9	OUT 2	O		21	IN 2	I	
10	OUT 1	O		22	SEL 1	I	Data shift
11	NS	I	Chip test	23	SEL 2	I	
12	COM	I	Analog input from buffer amp.	24	$\overline{ICL}$	I	Initial clear

• YM3413 (XE449A00) LDSP (Digital Signal Processor)

PIN NO.	NAME	I/O	FUNCTION	PIN NO.	NAME	I/O	FUNCTION
1	VDD		DC supply	21	A5	O	Address bus
2	D7	I/O	Data bus	22	A6	O	
3	D6	I/O		23	A7	O	
4	D5	I/O		24	A8	O	
5	D4	I/O		25	A9	O	
6	D3	I/O		26	A10	O	
7	D2	I/O		27	A11	O	
8	D1	I/O		28	A12	O	
9	D0	I/O		29	A13	O	
10	SI0	I	Serial data input	30	A14	O	
11	SI1	I		31	A15	O	
12	SYW	I	Synch pulse	32	A16	O	
13	$\overline{WE}$	O	Write enable	33	SO0	O	Serial data output
14	$\overline{OE}$	O	Output enable	34	XCLK		Clock
15	A0	O	Address bus	35	$\overline{IC}$	I	Initial Clear
16	A1	O		36	$\overline{CRS}$	I	CD counter reset
17	A2	O		37	CDI	I	CD input
18	A3	O		38	CDo	O	CD output
19	A4	O		39	SO1	O	Serial data output
20	Vss		Ground	40	CLK		Clock

• MIX-3 (IG156010) Mixer 3

PIN NO.	NAME	I/O	FUNCTION	PIN NO.	NAME	I/O	FUNCTION
1	MIX1	I	Input from tone generator	9	$\overline{RES}$	I	Reset
2	MIX2	I		10	NC		Not used
3	MIX3	I		11	MXD	O	Mixing data output
4	MIX4	I		12	MXC	O	
5	$\overline{CDI}$	I	Control data input	13	SYW	I	Synchro. pulse
6	$\overline{CRS}$	I	CD counter reset	14	XCLK	I	Clock
7	CDO	O	Control data output	15	CLK	I	Master clock
8	VSS		Ground	16	VDD		Power supply

■IC BLOCK DIAGRAM (IC ブロック図)

• TC40H000P (IG080700)
Quad 2 Input NAND

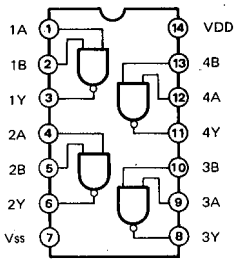

• TC40H004P (IG051000)
Hex Inverter

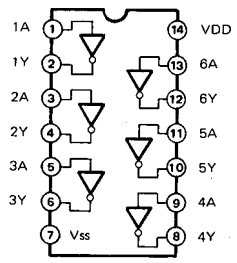

• SN74HC132N (IR0132500)
Quad 2 Input NAND

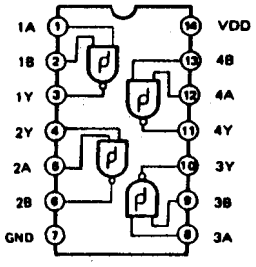

● TC40H138P (IG111900)
3 to 8 Demultiplexer

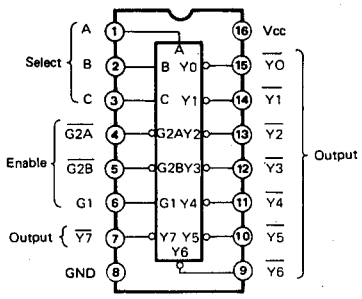

● TC40H139P (IG078300)
Dual 2 to 4 Demultiplexer

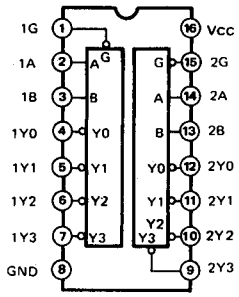

● TC40H174P (IG064100)
Hex D-Type Flip-Flop

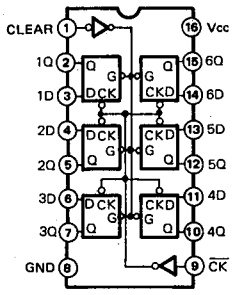

● TC40H373PYH (IG078500)
Octal 3-State D-Type Latch

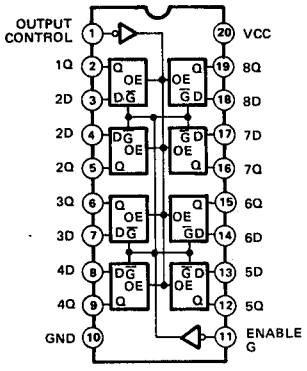

● μPC4570HA (XB247001)
Dual Operational Amplifier

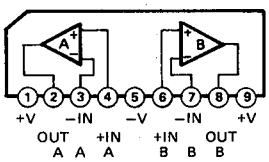

● NJM4560ED (IG040000)
Dual Operational Amplifier

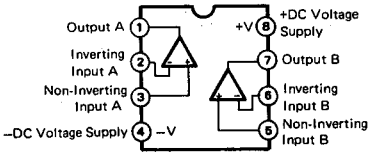

● TC40H175P (IG096700)
Quad D-Type Flip-Flop

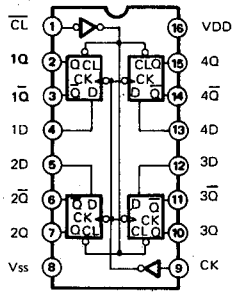

● M5216L (XB419001)
Dual Operational Amplifier

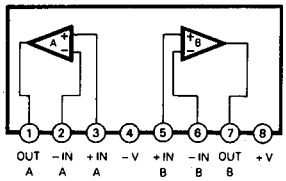

● TC40H367P (IG107300)
Hex 3-State Bus Buffer

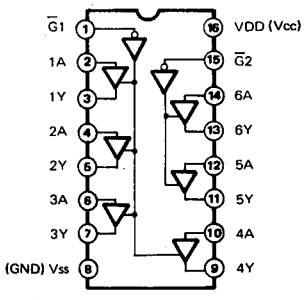

CLP-560

■BLOCK DIAGRAM（ブロックダイアグラム）

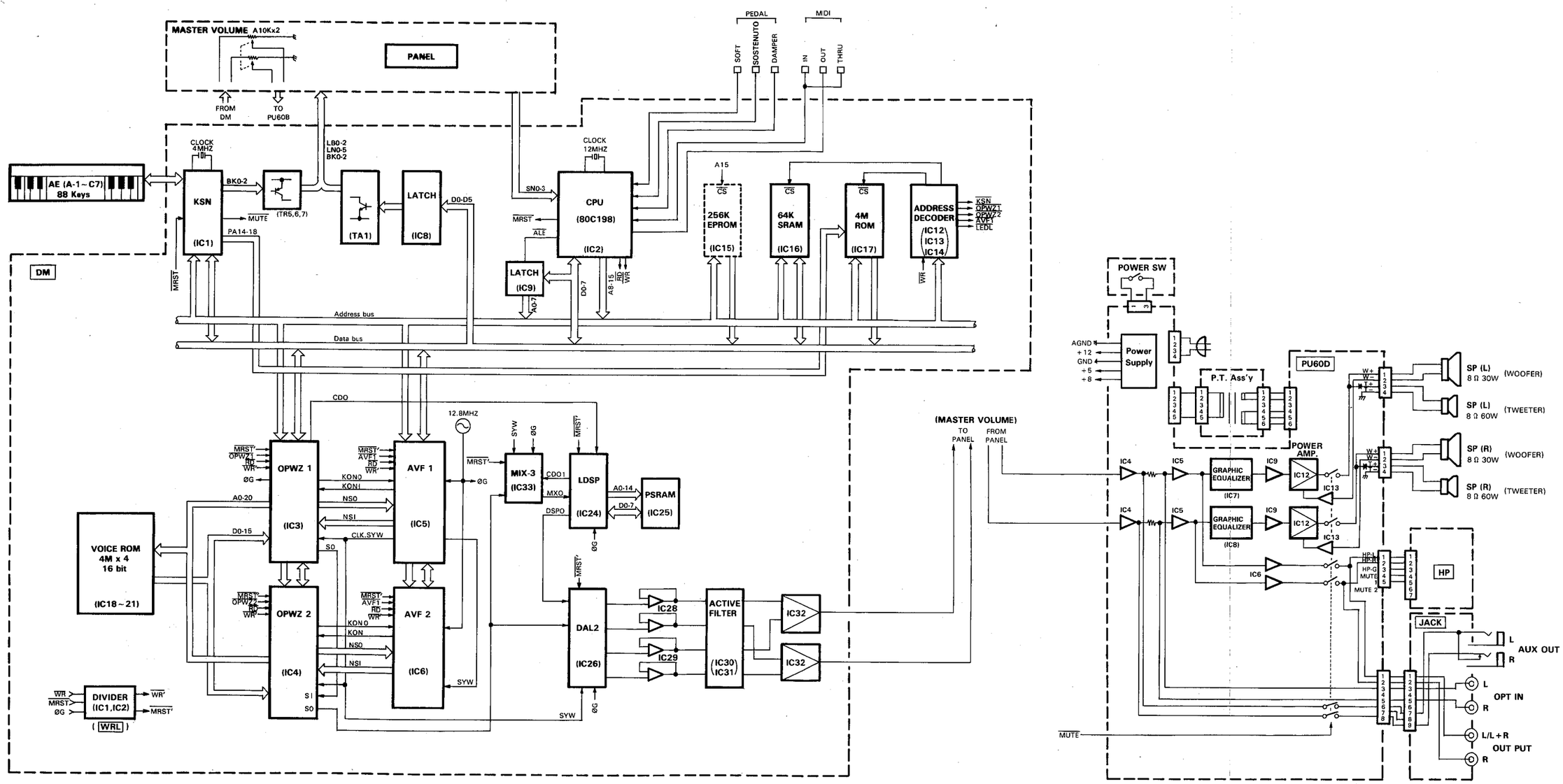

■CIRCUIT BOARDS（シート基板図）

●DM Circuit Board

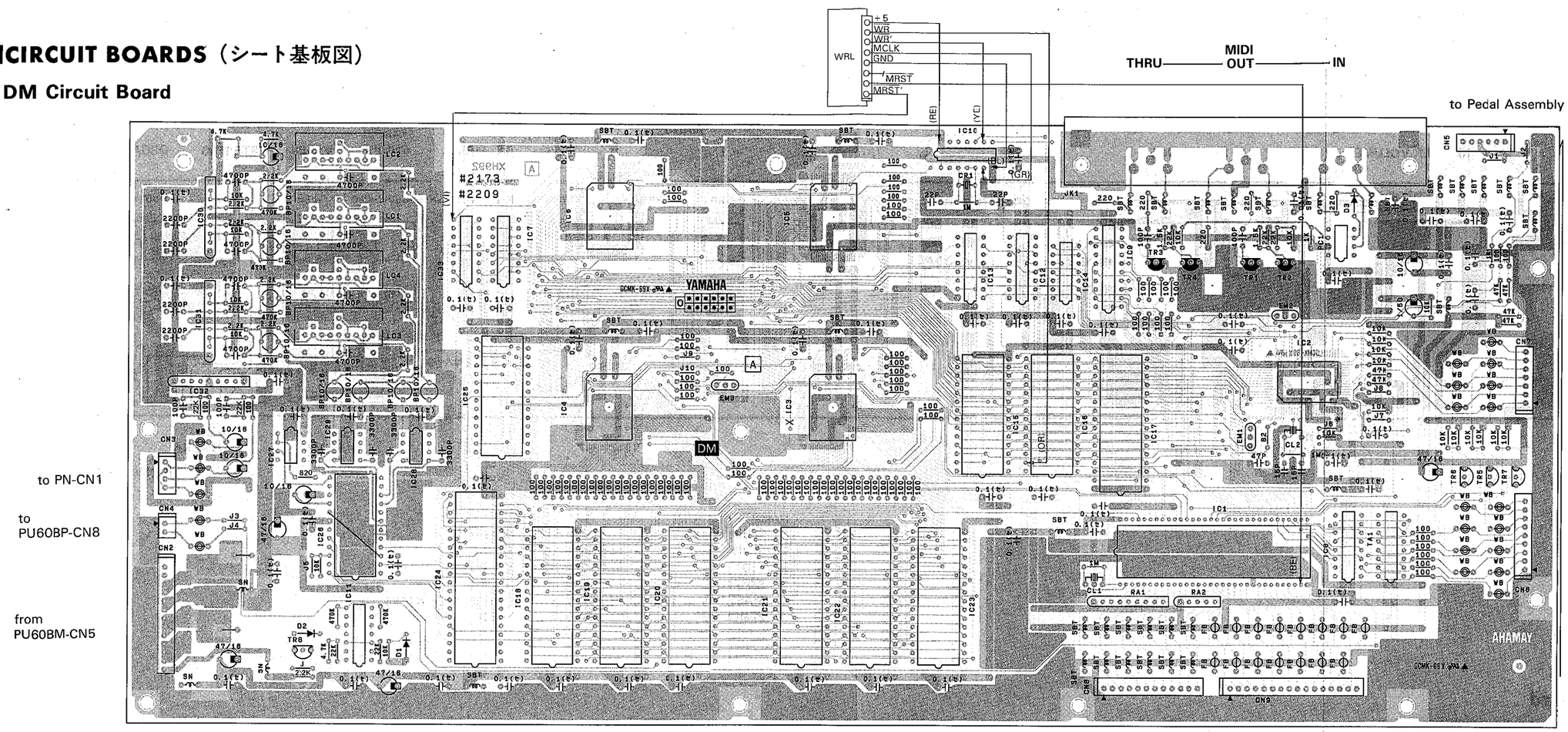

Components side（部品側）

IC15	J6
○	○
X	X

Notes)

Circuit Board : DM (VJ730400) XH992A0

1. IC
   - IC 1: YM6633 (XH543A00) KSN
   - IC 2: S83C198-R0012 (XI071A00) CPU
   - IC 3,4: YM7132 (XH235A00) OPWZ
   - IC 5,6: YSF206 (XI069A00) AVF-1
   - IC 7: TC40H367P (IG107300) BUFFER
   - IC 8: TC40H174P (IG064100) D.FF
   - IC 9: TC40H373PYH (IG078500) LATCH
   - IC10: TC40H004P (IG051000) INVERTER
   - IC11: SN74HC132N (IR013250) NAND
   - IC12: TC40H138P (IG111900) DEMULTIPLEXER
   - IC13: TC40H139P (IG078300) DECODER
   - IC14: TC40H000P (IG080700) QUAD NAND
   - IC15: (XI052B00) SUB ROM
   - IC16: LH5164D-10L (XF876A00) SRAM 64K
   - IC17: (XI454A00) PARAMETER 4M
   - IC18: HN62314BPD51 (XI455A00) ROM-1 4M
   - IC19: HN62314BPD52 (XI456A00) ROM-2 4M
   - IC20: HN62314BPD53 (XI457A00) ROM-3 4M
   - IC21: HN62314BPD54 (XI458A00) ROM-4 4M
   - IC22: HN62314BPD55 (XI459A00) ROM-5 4M
   - IC23: HN62314BPD56 (XI460A00) ROM-6 4M
   - IC24: YM3413 (XE449A00) LDSP
   - IC25: TC51832PL-10 (XC628A00) PSRAM 256K
   - IC26: YM3028 (XE789A00) DAL2
   - IC27-29: NJM4560ED (IG040000) OP AMP.
   - IC30-32: μPC4570HA (XB247001) OP AMP.
   - IC33: MIX3 (IG156010) MIXER
2. Photo Coupler
   - PC 1: 6N137 (VD473200)
3. Transistor
   - TR 1-4: 2SC1740S R,S (IC174070)
   - TR 5-8: 2SA1015 O,Y (IA101570)
4. Transistor Array
   - TA 1: MC1413P (VH441500)
5. Diode
   - D 1-3: 1SS133 (IF003450)
6. Resistor Array
   - RA 1: RGLD8X103J (VE445200) 10K×8
   - RA 2: RGLD4X103J (VE443500) 10K×4
7. Semiconductive Cera. Cap.
   - marked 0.1(セ): 0.1μ 16V M (VH740700)
8. Coil
   - SN: SF-T3-20-01 (VJ528500) 10μ
   - SBT: FL5R200QNT (VB835000) 20μ or SBT-0460T (VD473700) 60μ
9. Ferrite Bead
   - FB: BL02RN1-R62T4 (GE300610)
   - WB: BL02RN2-R62T4 (GE300670)
10. Ceramic Resonator
    - CL 1: CST4.00MGW040 (VI653000) 4MHz
    - CL 2: 12M CSA12.0MT (QU007700) 12MHz
11. Quartz Crystal Unit
    - CR 1: 12.8M AT-49 (VI460600) 12.8MHz
12. DIN Socket
    - JK 1: JXT0820-01 (VF647300) MIDI IN,OUT,THR
13. Jumper Wire
    - J 2,3,6: installed
    - J 1,4,5,7-10: not installed

●WRL Circuit Board

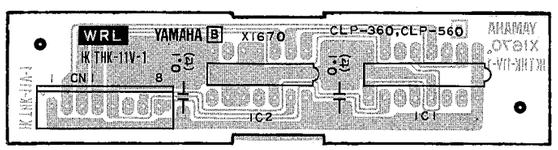

Components side（部品側）

Notes)

Circuit Board : WRL (VK326000) XI670B0

1. IC
   - IC 1: TC40H175P (IG096700) D.FF
   - IC 2: TC40H000P (IG080700) QUAD NAND
2. Semiconductive Cera. Cap.
   - marked 0.1(セ): 0.1μ 16V M (VH740700)

DM: 2NA-VJ73040 ⚠
WRL: 2NA-VK32600

CLP-560

● PN Circuit Board

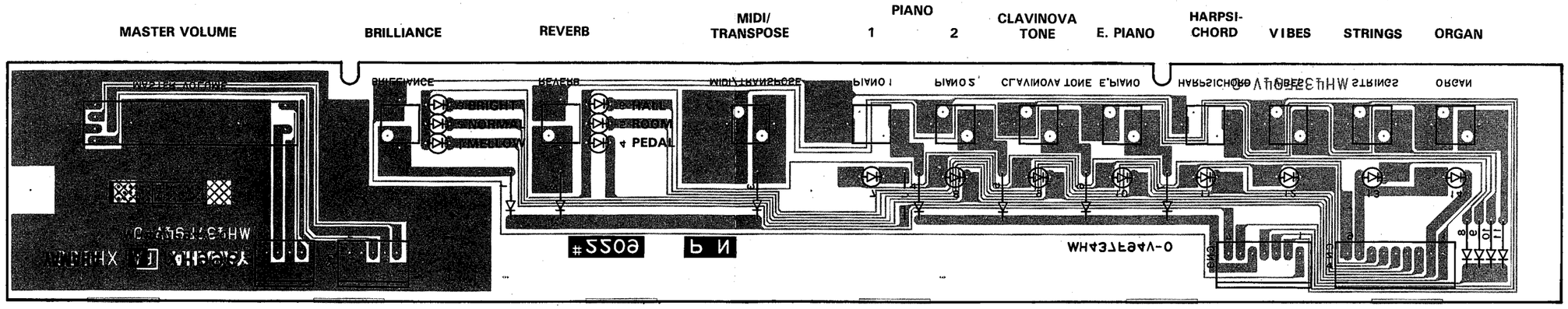

from DM-CN3

to PU60BP-CN9

from DM-CN7

from DM-CN6

Pattern side (パターン側)

Notes)

	Circuit Board :	PN (NX005170) XH996A0
1.	Diode :	1SS133 (IF003450)
2.	LED :	SLZ-190B-03 RE (VD180000)
3.	Slide Pot. MASTER VLUME:	RS30112A900QB (VK369000) A10Kx2
4.	Push Switch :	KEC10901 (KA906550)

● HP Circuit Board

from PU60BP-CN15

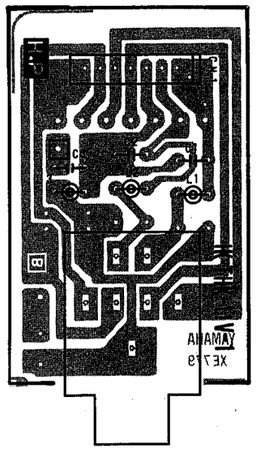

PHONES

Notes)

	Circuit Board :	HP (VF710500) XE779B0
1.	Semiconductive Cera. Cap. C 1-3:	0.1μ 16V M (FZ006590)
2.	Coil L 1-3:	FL5R200QN 20μ (VB971100)
3.	Phone Jack	YKB21-5006 (LB101870) PHONES

Components side (部品側)

PN: 2NA-VJ71680 ⚠
HP: 2NA-VF56770 ⚠

CLP-560

● PU60BM Circuit Board

from PU60BP-CN13

from AC Cord

to Power Transformer

to Power Switch

from Power Transfermer

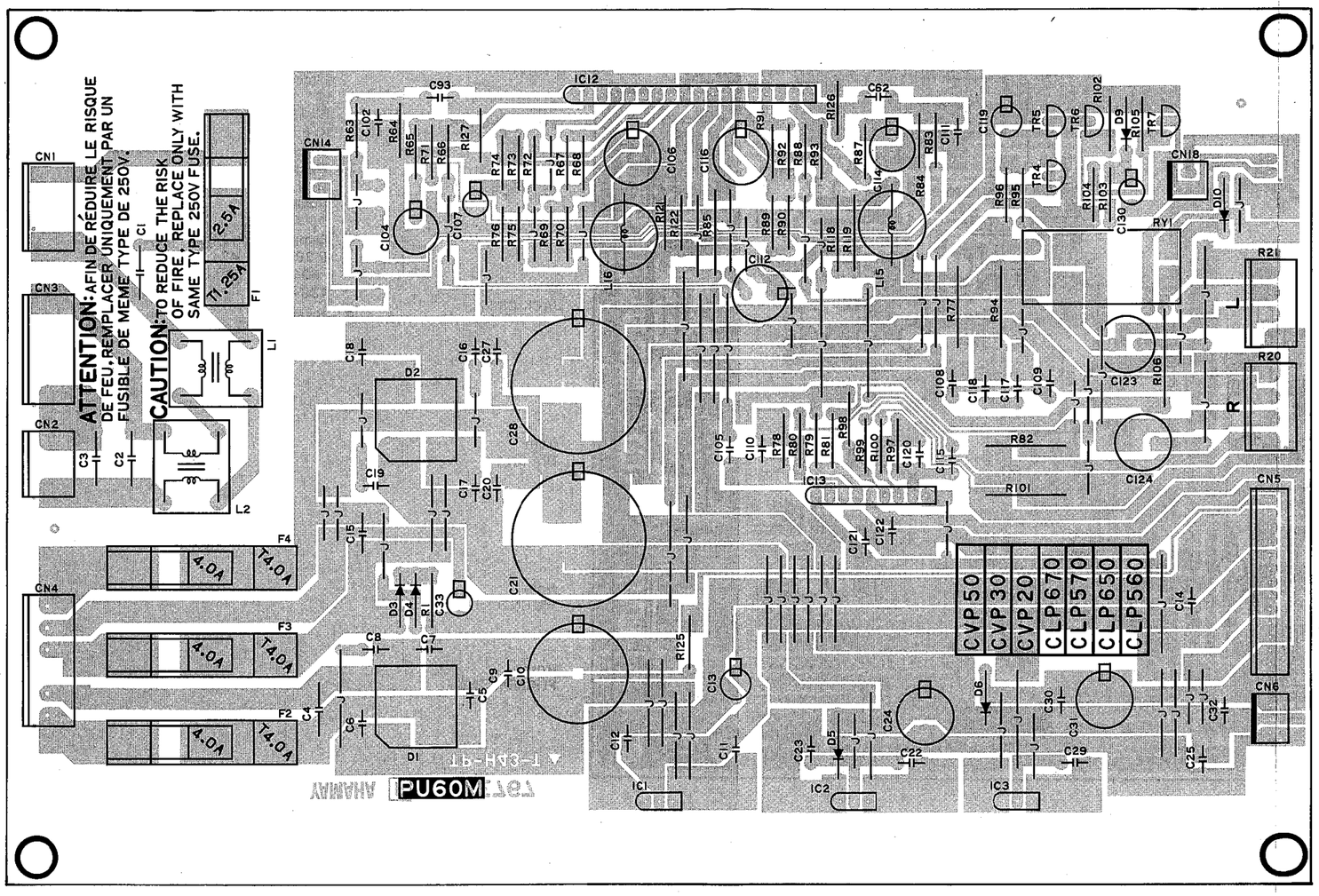

to PU60BP-CN17

to Speaker Left

to Speaker Right

from DM-CN2

to PU60BP-CN7

Components side (部品側)

Notes)

Circuit Board :
- PU60BM (VJ743500) XE767E0 J,M,X
- PU60BM (VJ743600) XE767E0 U,C
- PU60BM (VJ743700) XE767E0 H,B,A

1. IC
   - IC 1: NJM7805FA (XC719001) +5V REGULATOR
   - IC 2: NJM78M12FA (XD341A00) +12V REGULATOR
   - IC 3: NJM79M12FA (XD343A00) -12V REGULATOR
   - IC12: STK4151V (XC038001) POWER AMP.
   - IC13: μPC4570HA (XB247001) OP AMP.
2. Transistor
   - TR 4,5,7: 2SC1815 GR (IC181530)
3. Diode
   - D 5,6,10: 11ES4 (VB481900)
4. Diode Stack
   - D 1,2: 4D4B42 3A 200V (IH001790)
5. Metal Oxide Film Resistor
   - R 77,94: 4.7Ω 2W J (VC755500)
   - R 82,101: 0.22Ω 2W J (VC751900)
6. Fuse Resistor
   - R 85: 100Ω 1/4 K (HW995100)
7. Electrolytic Cap.
   - C 10: 6800μ 16.0V (UJ739680)
   - C 21,28: 4700μ 35.0V (UJ759470)
8. Ceramic Cap.
   - C 1,4: 0.01μ 400V (FI384100) U.C.S.V or 0.01μ 400V (FI494100) J.U.C.S
   - C 2,3: 4700P 400V (FI383470) U.C.S.V or 4700P 400V (FI493470) J.U.C.S
9. Semiconductive Cera. Cap.
   - C 9,11,12,14, 20,22,23,25, 27,29,30,32, 121,122: 0.1μ 50V Z (VD287800)
10. Coil
    - L 1: SU10V-20010 (VD293400) 10mH
    - L 2: SU10V-D20010 (VF790900) 10μ
11. Relay
    - RY 1: DC DH24D2-OT(M) (KC001940) 24V or DC G5R-2232P (VC278600) 24V
12. Fuse
    - F 1: T 2.50A J 250V (KB000420) J,M,X; T 2.50A UC 250V (KB002680) U,C; T 1.25A S 250V (KB000680) H,B,A
    - F 2-4: T 4.00A J 250V (KB000380) J,M,X; T 4.00A UC 250V (KB002640) U,C; T 4.00A S 250V (KB000790) H,B,A

CLP-560

● PU60BP Circuit Board

to PU60BM-CN14

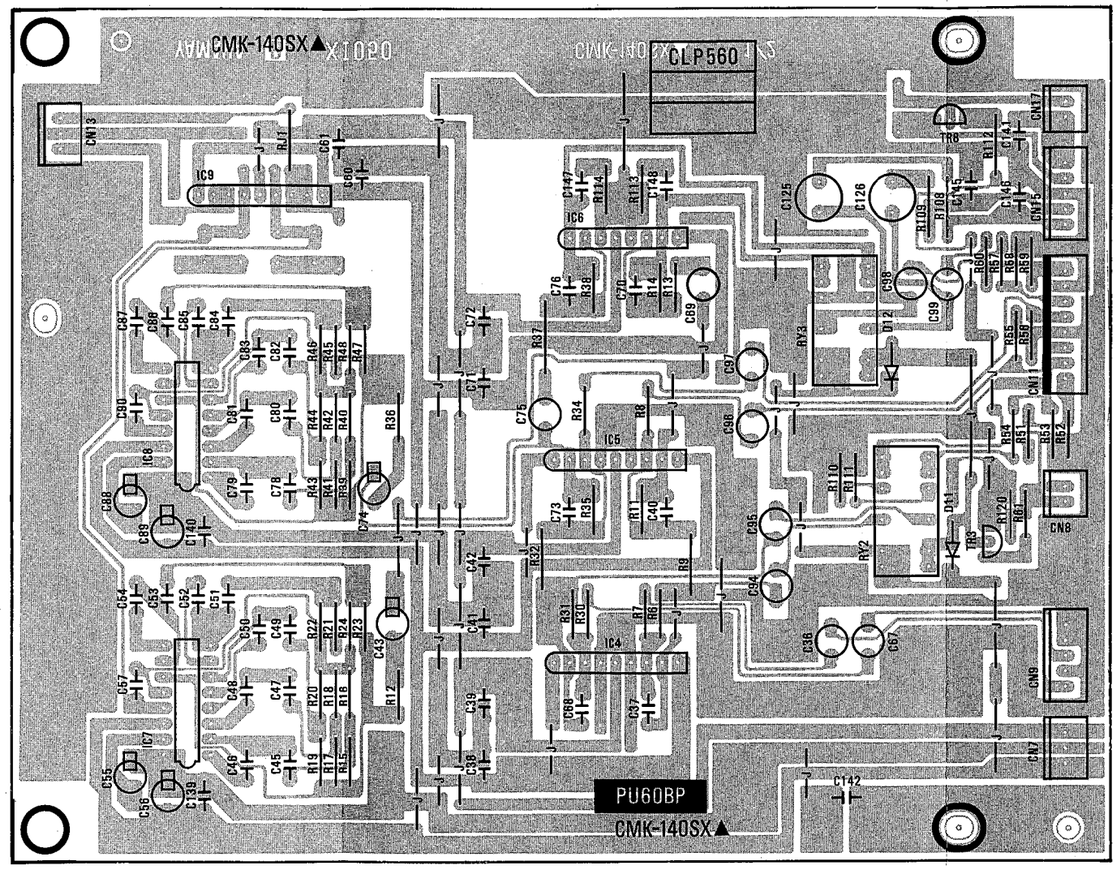

from PU60BM-CN18

to HP-CN1

to JACK-CN12

from DM-CN4

from PN-CN2

from PU60BM-CN6

Components side (部品側)

Notes)

Circuit Board : PU60BP (NX005180) XI050B0

1. IC
   - IC 4,5,9: μPC4570HA (XB247001) OP AMP.
   - IC 6: M5216L (XB419001) 2CH OP AMP.
   - IC 7,8: M5226P (IG151400) G.EQUALIZER
2. Transistor
   - TR 3,8: 2SC1815 GR (IC181530)
3. Diode
   - D 11,12: 1SS133 (IF003450)
4. Semiconductive Cera. Cap.
   - C 38,39,41,42, 60,61,71,72, 139-142: 0.1μ 16V N (VH740700)
5. Relay
   - RY 2,3: DC RY12W 12V (KC001900)

● JACK Circuit Board

from PU60BP-CN11

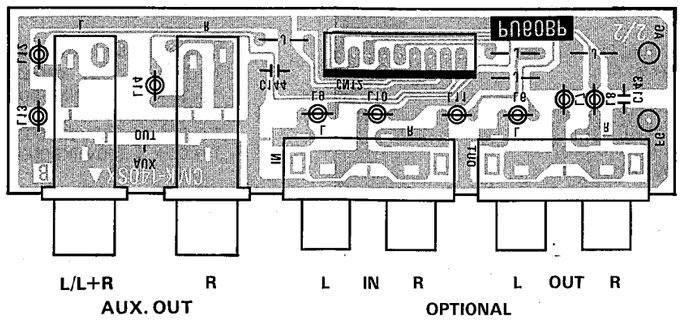

Pattern side (パターン側)

Notes)

Circuit Board : JACK (NX005190) Xi050B0

1. Phone Jack
   - AUX-OUT: HLJ0521 MONO (LB202330) AUX. OUT R,L/L+R
2. Pin Jack
   - L,R: YKC21-0188 (VI145300) OPTIONAL IN, OUT
3. Coil
   - L6,8-12: FL5R200QNT 20μ (VB835000) or SBT-0460T 60μ (VD473700)

■TEST PROGRAM

1. HOW TO ENTER THE TEST PROGRAM

Turn on the power switch of the CLP-560, then press [A-1] and [C7] keys of the keyboard immediately, the system will run the INITIAL TEST routine.

2. INITIAL TEST

The following tests will be performed automatically when the test program is initiated.

A. The 2nd make contact of keyboard switch test
B. Pedal switch off test
C. Panel switch off test
D. Voice ROM installation test

DISPLAY OF TEST RESULTS

If each test checks OK then the test program proceeds to the test program entry mode.

If test A is NG, the system won't enter the test program mode.
If test B is NG, the PIANO 1 LED will blink.
If test C is NG, the PIANO 2 LED will blink.
If test D is NG, the CLAVINOVA TONE LED will blink.

3. TEST PROGRAM

3-1 SYSTEM RESET

If you press [B-1] key, you will exit the test mode and return to normal operation.

3-2 VERSION DISPLAY MODE

In order to verify the ROM version of the CLP-560, press [C0] key then the VOICE LEDs will indicate the version of ROM as shown below.

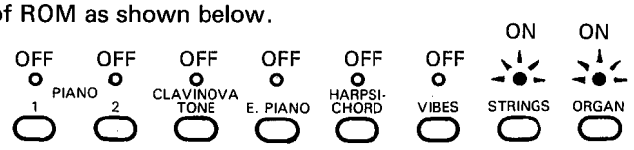

(e.g. when indicators show the version 3.)

3-3 PANEL LED TEST

To initiate this test press and hold [D0] key, and check that each LED light in succession from the left end of the unit.
If [E0] key is pressed, the entire lit LED will turn off.

3-4 EXTERNAL RAM TEST

Pressing [F0] key performs the RAM test. If an error is detected, the E. PIANO LED will blink.

3-5 MIDI TEST

After connecting the MIDI IN to MIDI OUT via MIDI cable, press [G0] key to execute this test.
If the proper code is not received, the HARPSICHORD LED will blink to indicate an error occurs.

3-6 1kHz SOUND OUTPUT (OPWZ-1)

Check that sine waves of 1kHz being output from OPWZ-1 or IC 3.
To initiate this test, press [A0] key.
(L channel: −0.38dB, R channel: −0.38dB)

3-7 440kHz SOUND OUTPUT (OPWZ-1)

Check that sine waves of 440Hz being output from OPWZ-1 or IC 3.
To initiate this test, press [B0] key.
(L channel: −0.2dB, R channel: −2.8dB)

3-8 440kHz SOUND OUTPUT (OPWZ-2)

Check that sine waves of 440Hz being output from OPWZ-2 or IC 4.
To initiate this test, press [C1] key.
(L channel: −0.2dB, R channel: −2.8dB)

3-9 SOUND DIMINISH

If [D1] key is pressed, the sound will diminish.

3-10 440kHz SOUND OUTPUT (OPWZ-1)

Check that sine waves of 440Hz being output from OPWZ-1 or IC 3.
To initiate this test, press [C3] key.
(L channel: −0dB, R channel: −∞dB)

3-11440kHz SOUND OUTPUT (OPWZ-1)
Check that sine waves of 440Hz being output from OPWZ-1 or IC 3.
To initiate this test, press [G3] key.
(L channel: −∞dB, R channel: −0dB)

3-1216 SOUND GENERATION TEST (OPWZ-1)
Check that 16 notes correctly sound from OPWZ-1 or IC3.
To initiate this test press [C4] key.

3-1316 SOUND GENERATION TEST (OPWZ-2)
Check that 16 notes correctly sound from OPWZ-2 or IC4.
To initiate this test press [D4] key.

■テストプログラム

1．テストプログラムの起動

POWER ON直後に、〔A-1〕KEY、〔C 7〕KEYをONする事によりイニシャルテストモードとなる。

2．イニシャルテスト

イニシャルテストモードになると、以下の項目を自動的にチェックする。

(1)鍵盤2ndメイクSWチェック　　：NG→テストプログラムモードに入らない。
(2)ペダルSW OFFチェック　　：NG→PIANO 1 LED点滅
(3)パネルSW OFFチェック　　：NG→PIANO 2 LED点滅
(4)音源パラメーターROM装着チェック：NG→CLAVINOVA TONE LED点滅

3．テストプログラム

KEY ON毎に、そのKEYに該当するテストを行なう。

〔B-1〕：SYSTEM RESET
〔C 0〕：VOICE LEDでROMバージョン表示

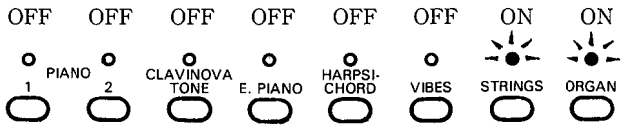

VERSION3

〔D 0〕：PANELの全LEDを点灯する。(KEYを押しつづけると順次点灯する)
〔E 0〕：PANELの全LEDを消灯する。
〔F 0〕：外付けRAM CHECK：NG→E. PIANO LED点滅
〔G 0〕：MIDI CHECK　　：NG→HARPSICHORD LED点滅
(MIDI端子IN、OUTをMIDIケーブルでショートし、KEYをONした時、OUTよりデータが出力されINに同じデータが戻ってくればOK。)
〔A 0〕：音源OPWZ_1 1KHz、正弦波を発音。(L：−0.38dB R：−0.38dB)
〔B 0〕：音源OPWZ_1 440Hzの正弦波を発音。(L：−0.2dB R：−2.8dB)
〔C 1〕：音源OPWZ_2 440Hzの正弦波を発音。(L：−0.2dB R：−2.8dB)
〔D 1〕：音源OPWZ_1、2の発音をOFF。
〔C 3〕：音源OPWZ_1 440Hzの正弦波を発音。(L：− 0 dB R：−∞dB)
〔G 3〕：音源OPWZ_1 440Hzの正弦波を発音。(L：−∞dB R：− 0 dB)
〔C 4〕：音源OPWZ_1 1-16ch順次発音。
〔D 4〕：音源OPWZ_2 1-16ch順次発音。

■MIDI DATA FORMAT

1. NOTE ON/OFF

Data format: [9xH] -> [kk] -> [vv]

9xH = Note ON/OFF event (x = channel number)
kk = Note number (21 ~ 108 = A-1 ~ C7)
vv = Velocity (Key ON = 1 ~ 127. Key OFF = 0)

** Note OFF event format [8xH] -> [kk] also recognized.*

2. CONTROL CHANGE & MODE MESSAGES

Data format: [BxH] -> [cc] -> [dd]

BxH = Control event (x = channel number)
cc = Control number (or mode message number)
dd = Control value

cc	PARAMETER	dd
07H	Volume	00000000 = -∞; 01101111 = -3 dB; 01111111 = ±0 dB
0BH	Expression	00000000 = -∞; 01101111 = -3 dB; 01111111 = ±0 dB
40H	Damper pedal	0 ~ 3FH = OFF; 40H ~ 7FH = ON
42H	Sostenuto pedal	0 ~ 3FH = OFF; 40H ~ 7FH = ON
43H	Soft pedal	0 ~ 3FH = OFF; 40H ~ 7FH = ON
79H	Reset all controllers	0
7AH	Local ON/OFF	0 = OFF; 7FH = ON
7BH	All notes OFF	0
7CH	OMNI OFF/All notes OFF	0
7DH	OMNI ON/All notes OFF	0

** 79H, 7AH, 7BH, 7CH and 7DH are receive only.*

3. PROGRAM CHANGE

Data format: [CxH] -> [dd]

CxH = program event (x = channel number)
dd = Program number

dd	
00H	PIANO 1
01H	PIANO 2
02H	CLAVINOVA TONE
03H	E.PIANO
04H	HARPSICHORD
05H	VIBES
06H	STRINGS
07H	ORGAN

** No voice change is made when dd > 07H.*

4. SYSTEM REALTIME MESSAGES

Active Sensing (FEH)

Transmitted every 200 milliseconds. If not received for more than 400 milliseconds a NOTE OFF occurs.

5. SYSTEM EXCLUSIVE MESSAGES

Data format : [F0H] -> [43H] -> [nx] -> [ff] . . . [F7H]

n = 0, ff = 7CH: Panel data reception. Panel data follows 7CH.
n = 2, ff = 7CH: Panel data transmitted when this data received.
n = 2, ff = 7DH: Model ID code transmitted when this data received.

** Panel data is voice number, brilliance and reverb settings.*

6. MULTI TIMBRE MODE

Data format: [F0H] -> [43H] -> [73H] -> [24H or 25H] -> [nnH] -> [F7H]

43H = YAMAHA ID
73H = CLAVINOVA ID
25H = CLP-560 ID
nn = 15H: MULTI TIMBRE mode ON;
nn = 13H: MULTI TIMBRE mode OFF

** In addition to model ID codes [24H] and [25H], the standard ID code [01H] and Clavinova ID code [1BH] are also accepted.*

7. SPECIAL FUNCTIONS

Data format: [F0H] -> [43H] -> [73H] -> [24H or 25H] -> [11H] -> [0x] -> [cc] -> [dd] -> [F7H]

43H = YAMAHA ID
73H = CLAVINOVA ID
25H = CLP-560 ID
11H = Special function code.
0x = Control MIDI Channel

cc	CONTROL	dd
58H	BRILLIANCE	00H = NORMAL 01H = MELLOW 02H = BRIGHT
59H	REVERB	00H = OFF 01H = PEDAL 02H = ROOM 03H = HALL
5AH	DUAL	00H = OFF 01H = DUAL
5CH	2nd VOICE NUMBER	00H ~ 07H

** In the MULTI TIMBRE mode BRILLIANCE can be set independently for each channel, while REVERB affects all voices and is received on the basic receive channel.*

YAMAHA [Clavinova] Date : 05/22, 1990
Model CLP-560 MIDI Implementation Chart Version : 1.0

Function		Transmitted	Recognized	Remarks
Basic Channel	Default	1	1	
	Changed	1-16	1-16	
Mode	Default	3	1	
	Messages	X	OMNIon,OMNIoff	
		**********	X	
Note Number		21-108	21-108	
	True voice	**********	21-108	
Velocity	Note on	0 9nH,v=1-127	0 v=1-127	
	Note off	X 9nH,v=0	X	
After Touch	Key's	X	X	
	Ch's	X	X	
Pitch Bender		X	X	
Control Change	07	X	0	Volume
	11	X	0	Expression
	64	0	0	Damper
	66	0	0	Sostenuto
	67	0	0	Soft Pedal
	121	X	0 *1	Reset All Controllers
Program Change	True #	0 0-7 **********	0 0-7 0-7	
System Exclusive		0	0	
System Common	Song Pos	X	X	
	Song Sel	X	X	
	Tune	X	X	
System Real Time	Clock	X	X	
	Commands	X	X	
Aux Mes-sages	Local ON/OFF	X	0	
	All Notes OFF	X	0 (123-125) *2	
	Active Sense	0	0	
	Reset	X	X	

Notes : *1 = receive (121) if omni off or multi-timbre on
*2 = receive (123) if omni off or multi-timbre on

Mode 1 : OMNI ON, POLY Mode 2 : OMNI ON, MONO 0 : Yes
Mode 3 : OMNI OFF, POLY Mode 4 : OMNI OFF, MONO X : No

Clavinova

CLP-560

PARTS LIST

Notes DESTINATION ABBREVIATIONS

J	: Japanese model	A	: Australian model
U	: U.S. model	E	: European model
C	: Canadian model	D	: West German model
X	: General model	B	: British model
M	: South African model	I	: Indonesian model
H	: North European model		

■ELECTRICAL PARTS（電気部品）

	Ref. No.	Part No.	Description		部品名	Remarks	ランク
*		VJ730400	Circuit Board	DM	DMシート	CLP560	
* *		VK326000	Circuit Board	WRL	WRLシート		
* *		NX005170	Circuit Board	PN	PNシート		
		VF710500	Circuit Board	HP	HPシート		07
		VG795500	Circuit Board	PEDAL	PEDALシート		
		VC796500	Circuit Board	AE88L	AE88Lシート		09
		VC796300	Circuit Board	AE C	AE Cシート		10
		VC796600	Circuit Board	AE88H	AE88Hシート		08
*		VJ743200	Power Amplifer Unit	PU60B	PU60Bシート Assy	J,M,X	
* *		VJ743300	Power Amplifer Unit	PU60B	PU60Bシート Assy	U,C	
* *		VJ743400	Power Amplifer Unit	PU60B	PU60Bシート Assy	H,B,A	
* *		VJ743500	Circuit Board	PU60BM	PU60BMシート	J,M,X	
* *		VJ743600	Circuit Board	PU60BM	PU60BMシート	U,C	
* *		VJ743700	Circuit Board	PU60BM	PU60BMシート	H,B,A	
* *		NX005180	Circuit Board	PU60BP	PU60BPシート		
* *		NX005190	Circuit Board	JACK	JACKシート		
*		VJ730400	Circuit Board	DM	DMシート		
		IG040000	IC	NJM4560ED	IC	OP AMP.	04
		XB247001	IC	μPC4570HA	IC	OP AMP.	03
		IG051000	IC	TC40H004P	IC	INVERTER	03
		IG064100	IC	TC40H174P	IC	D.FF	05
		IG078300	IC	TC40H139P	IC	DECODER	05
		IG078500	IC	TC40H373PYH	IC	LATCH	07
		IG080700	IC	TC40H000P	IC	QUAD NAND	03
		IG107300	IC	TC40H367P	IC	BUFFER	04
		IG111900	IC	TC40H138P	IC	DEMULTIPLEXER	04
		IG156010	IC	MIX-3	IC	MIXER	05
		IR013250	IC	SN74HC132N	IC	NAND	03
*		XI071A00	IC	S83C198-R0012	IC	CPU	
		XC628A00	IC	TC51832PL-10	IC	PSRAM 256K	09
		XF876A00	IC	LH5164D-10L	IC	SRAM 64K	08
*		XI454A00	IC	LH534H98	IC	PARAMETER 4M	
* *		XI455A00	IC	HN62314BRD51	IC	ROM-1 4M	
* *		XI456A00	IC	HN62314BPD52	IC	ROM-2 4M	
* *		XI457A00	IC	HN62314BPD53	IC	ROM-3 4M	
* *		XI458A00	IC	HN62314BPD54	IC	ROM-4 4M	
* *		XI459A00	IC	HN62314BPD55	IC	ROM-5 4M	
* *		XI460A00	IC	HN62314BPD56	IC	ROM-6 4M	
*		XI052B00	IC		IC	SUB ROM	
		XE449A00	IC	YM3413	IC	LDSP	10
		XE789A00	IC	YM3028	IC	DAL2	10
*		XH235A00	IC	YM7132	IC	OPWZ	
		XH543A00	IC	YM6633	IC	KSN	09
*		XI069A00	IC	YSF206	IC	AVF-1	
		VD473200	Photo Coupler	6N137	フォトカプラ		05
		IA101570	Transistor	2SA1015 O,Y	トランジスタ		01
		IC174070	Transistor	2SC1740S R,S	トランジスタ		01
		VH441500	Transistor Array	MC1413P	トランジスタアレイ		03
		IF003450	Diode	1SS133	ダイオード		01
		VE443500	Resistor Array	RGLD4X103J	抵抗アレイ	10K×4	01
		VE445200	Resistor Array	RGLD8X103J	抵抗アレイ	10K×8	01
*		VH740700	Semiconductive Cera. Cap.	0.1μ 16V M	半導体セラコン		
		VJ528500	Coil	SF-T3-20-01	コイル	10μ	03
		VB835000	Coil	FL5R200QNT	コイル	20μ	01
		VD473700	Coil	SBT-0460T	コイル	60μ	01
		QU007700	Ceramic Resonator	12M CSA12.0MT	セラミック振動子	12MHz	03
		VI653000	Ceramic Resonator	CST4.00MGW040	セラミック振動子	4MHz	01
		VI460600	Quartz Crystal Unit	12.8M AT-49	水晶振動子	12.8MHz	03
		GE300610	Ferrite Bead	BL02RN1-R62T4	フェライトビーズ		01
		GE300670	Ferrite Bead	BL02RN2-R62T4	フェライトビーズ		02
		VF647300	DIN Socket	JXT0820-01	DINソケット	MIDI IN,OUT,THR	04
*		VK326000	Circuit Board	WRL	WRLシート		
		IG096700	IC	TC40H175P	IC	D.FF	05
		IG080700	IC	TC40H000P	IC	QUAD NAND	03
*		VH740700	Semiconductive Cera. Cap.	0.1μ 16V M	半導体セラコン		
*		NX005170	Circuit Board	PN	PNシート		
		IF003450	Diode	1SS133	ダイオード		01
		VD180000	LED	SLZ-190B-03 RE	LED		01
*		VK369000	Slide Pot.	RS30112A900QB	二連スライドVR	A10K×2	
		KA906550	Push Switch	KEC10901	プッシュスイッチ		02
		VF710500	Circuit Board	HP	HPシート		07
*		FZ006590	Semiconductive Cera. Cap.	0.1μ 16V M	半導体セラコン		
		VB971100	Coil	FL5R200QN 20μ	コイル		01
		LB101870	Phone Jack	YKB21-5006	ホーンジャック	PHONES	03

＊：New Parts（新規部品）　NR　　ランク：Japan Only

Ref. No.	Part No.	Description		部品名	Remarks	ランク
	VC796500	Circuit Board	AE88L	ＡＥ８８Ｌシート		09
	IF003450	Diode	1SS133	ダイオード		01
	VC796300	Circuit Board	AE C	ＡＥ　Ｃシート		10
	IF003450	Diode	1SS133	ダイオード		01
	VC796600	Circuit Board	AE88H	ＡＥ８８Ｈシート		08
	IF003450	Diode	1SS133	ダイオード		01
*	VJ743500	Circuit Board	PU60BM	ＰＵ６０ＢＭシート	J,M,X	
* * *	VJ743600	Circuit Board	PU60BM	ＰＵ６０ＢＭシート	U,C	
* * *	VJ743700	Circuit Board	PU60BM	ＰＵ６０ＢＭシート	H,B,A	
	XC719001	IC	NJM7805FA	ＩＣ	+5V REGULATOR	03
	XD341A00	IC	NJM78M12FA	ＩＣ	+12V REGULATOR	03
	XD343A00	IC	NJM79M12FA	ＩＣ	-12V REGULATOR	03
	XC038001	IC	STK4151V	ＩＣ	POWER	09
	XB247001	IC	μPC4570HA	ＩＣ	OP AMP.	03
	IC181530	Transistor	2SC1815 GR	トランジスタ		01
	VB481900	Diode	11ES4	ダイオード		01
	IH001790	Diode Stack	4D4B42 3A 200V	ダイオードスタック		04
	VC755500	Metal Oxide Film Resistor	4.7Ω 2W J	酸化金属被膜抵抗		01
	VC751900	Metal Oxide Film Resistor	0.22Ω 2W J	酸化金属被膜抵抗		01
	HW995100	Fuse Resistor	100Ω 1/4 K	ヒューズ抵抗		02
* *	UJ739680	Electrolytic Cap.	6800μ 16.0V	ケミコン		
* *	UJ759470	Electrolytic Cap.	4700μ 35.0V	ケミコン		
	FI384100	Ceramic Cap.	0.01μ 400V	規格認定コン	U.C.S.V	01
	FI494100	Ceramic Cap.	0.01μ 400V	規格認定コン	J.U.C.S	01
	FI383470	Ceramic Cap.	4700P 400V	規格認定コン	U.C.S.V	01
	FI493470	Ceramic Cap.	4700P 400V	規格認定コン	J.U.C.S	01
	VD287800	Semiconductive Cera. Cap.	0.1μ 50V Z	半導体セラコン		01
	VD293400	Coil	SU10V-20010	コイル	10mH	03
	VF790900	Coil	SU10V-D20010	コイル	10μ	03
	KC001940	Relay	DC DH24D2-0T(M)	リレー	24V	05
	VC278600	Relay	DC G5R-2232P	リレー	24V	05
	KB000420	Fuse	T 2.50A J 250V	ヒューズ	J,M,X	01
	KB000380	Fuse	T 4.00A J 250V	ヒューズ	J,M,X	01
	KB002680	Fuse	T 2.50A UC 250V	ヒューズ	U,C	03
	KB002640	Fuse	T 4.00A UC 250V	ヒューズ	U,C	03
	KB000680	Fuse	T 1.25A S 250V	ヒューズ	H,B,A	02
	KB000790	Fuse	T 4.00A S 250V	ヒューズ	H,B,A	02
	LB201530	Fuse Holder		ヒューズホルダー		01
	EA030126	Pan Head Screw	3.0X12 FCM3BL	ナベ小ネジ		01
*	NX005180	Circuit Board	PU60BP	ＰＵ６０ＢＰシート		
	XB247001	IC	μPC4570HA	ＩＣ	OP AMP.	03
	XB419001	IC	M5216L	ＩＣ	2CH OP AMP.	03
	IG151400	IC	M5226P	ＩＣ	G.EQUALIZER	03
	IC181530	Transistor	2SC1815 GR	トランジスタ		01
	IF003450	Diode	1SS133	ダイオード		01
*	VH740700	Semiconductive Cera. Cap.	0.1μ 16V N	半導体セラコン		
	KC001900	Relay	DC RY12W 12V	リレー		07
*	NX005190	Circuit Board	JACK	ＪＡＣＫシート		
	VB835000	Coil	FL5R200QNT 20μ	コイル		01
	VD473700	Coil	SBT-0460T 60μ	コイル		01
	LB202330	Phone Jack	HLJ0521 MONO	ホーンジャック	AUX.OUT R,L/L+R	02
	VI145300	Pin Jack	YKC21-0188	ピンジャック	OPTIONAL IN,OUT	01
	XE994A00	Power Transformer		電源トランス	J,U,C	14
	XE996A00	Power Transformer		電源トランス	H,B	14
	XE999B00	Power Transformer		電源トランス	A,M,X	14
	VD846400	AC Cord	7A 3.05m	電源コード	J	05
	MG001540	AC Cord	10A 3.05m	電源コード	U,C	06
	VD846300	AC Cord	2.5A 3.05m	電源コード	H	05
	VH895700	AC Cord	6.0A 3.05m	電源コード	B	09
	MG002070	AC Cord	3.5m	電源コード	A	06
	MG002080	AC Cord	3.05m	電源コード	M	06
	VE430800	AC Cord	3.5A 3.05m	電源コード	X	05
	LB202280	Voltage Selector	HXW0131-01-910	電圧切替器	A,M,X	03
	VD173100	Push Switch	SDDLA1	プッシュスイッチ	POWER	03
*	VJ698000	Stacked Wire, PK		ＰＫ束線	(Main Unit)	
* * *	VJ743900	PK Cable		ＰＫケーブル	J (Pedal Box)	
*	VJ744000	PK-DLF Cable		ＰＫ－ＤＬＦケーブル	U,C,H,B,A,M,X	
	HS412520	Variable Resistor	K161S0Z01	ロータリーＶＲ１連	PEDAL	05

＊：New Parts (新規部品)　NR

ランク：Japan Only

Ref. No.	Part No.	Description		部品名	Remarks	ランク
＊	XC892A00	Speaker	5cm 8Ω 60W	スピーカ	Tweeter	
＊	XI073A00	Speaker	13cm 8Ω 30W	スピーカ	Woofer	

＊：New Parts（新規部品）　NR

ランク：Japan Only

■OVERALL ASSEMBLY（総組立）

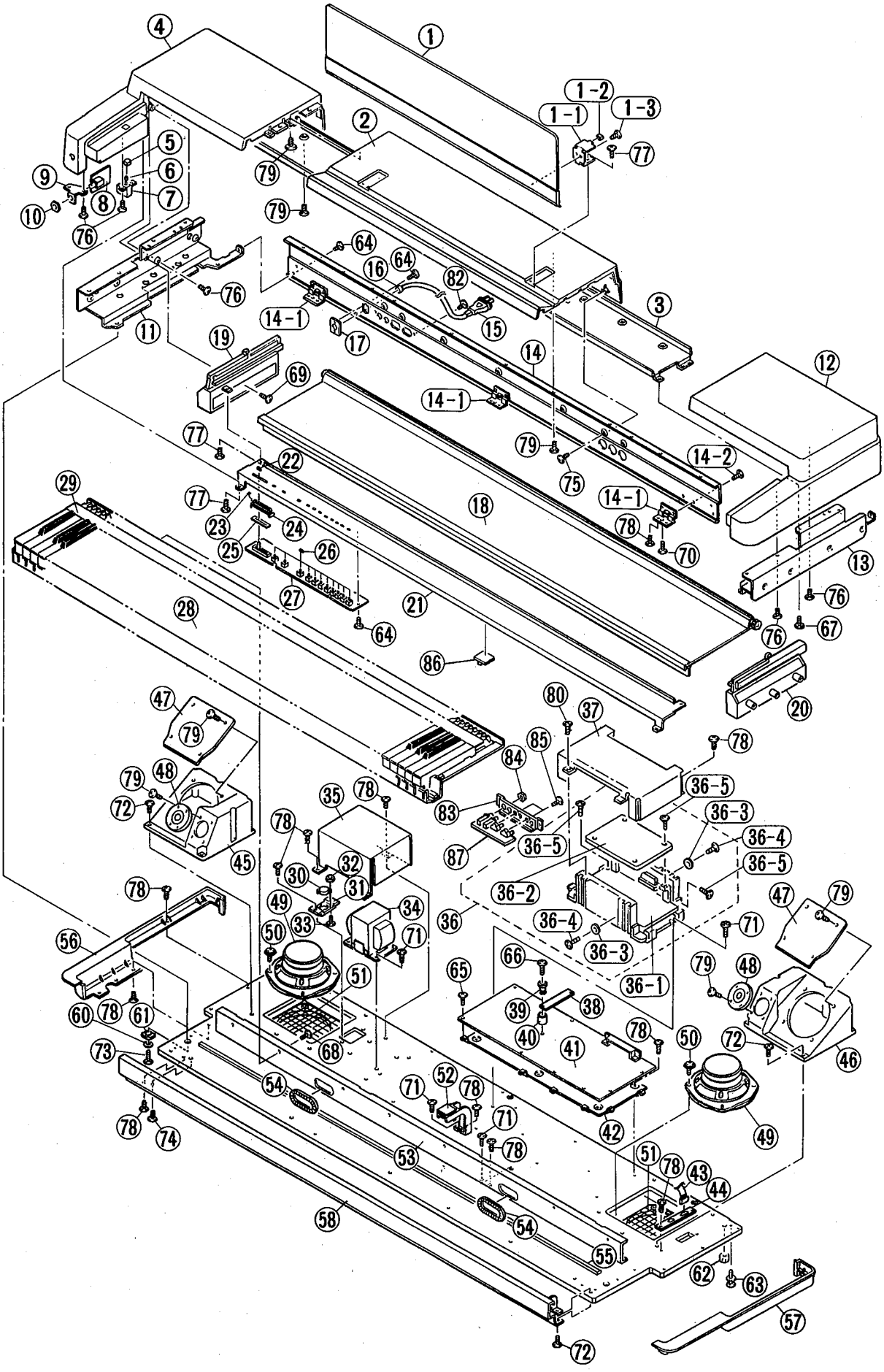

	Ref. No.	Part No.	Description		部品名	Remarks	ランク
*	1	VJ720800	Music Rest Assembly		譜面板Ass'y	CLP560	
	1-1	VD255900	Hinge		譜面板蝶番	2pcs	05
	1-2	CB054920	Cap	BL	キャップ	2pcs	01
	1-3	EI330066	Bind Head Tapping Screw	3.0X6 FCM3BL	ﾊﾞｲﾝﾄﾞﾀｯﾋﾟﾝｸﾞﾈｼﾞ	4pcs	01
*	2	VJ721600	Top Board		屋根		
	3	VH112800	Support, Top Board	L	屋根補強金具（L）		13
*	4	VJ721000	Side Cover	Left	腕木（左）		
	5	VF663400	Knob	BL	プッシュツマミ	POWER	01
	6	VD173100	Push Switch	SDDLA1	プッシュスイッチ	POWER	03
	7	CB049980	Switch Cover	BL	パワースイッチカバー	POWER	01
	8	VF710500	Circuit Board	HP	HPシート		07
	9	VF701200	Angle Bracket, HP		HP取付金具		01
	10	ET400040	Nut	12X14X2 FCM3BL	管用ナット		01
*	11	VJ614000	Bracket, Side Cover	Left	腕木金具（左）		
*	12	VJ721100	Side Cover	Right	腕木（右）		
*	13	VJ614100	Bracket, Side Cover	Right	腕木金具（右）		
*	14	VJ721800	Back Board		背面框		
	14-1	VA882700	Hinge		蝶番	3pcs	03
	14-2	ED330066	Bind Head Screw	3.0X6 FCM3BL	バインド小ネジ	6pcs	01
	15	VD846400	AC Cord	7A 3.05m	電源コード	J	05
	15	MG001540	AC Cord	10A 3.05m	電源コード	U,C	06
	15	VD846300	AC Cord	2.5A 3.05m	電源コード	H	05
	15	VH895700	AC Cord	6.0A 3.05m	電源コード	B	09
	15	MG002070	AC Cord	3.5m	電源コード	A	06
	15	MG002080	AC Cord	3.05m	電源コード	M	06
	15	VE430800	AC Cord	3.5A 3.05m	電源コード	X	05
	16	CB032840	Cord Strain Relief	SR-5N-4	コードストッパー	J,U,C,M,X	01
	16	CB072750	Cord Strain Relief	SR-4N-4	コードストッパー	H,B,A	01
	17	VF727800	Cord Holder		コード取付板		03
*	18	VJ722200	Slide Cover Assembly		スライド蓋Ass'y		
*	19	VJ761600	Slide Guide	Left	スライドガイド（左）		
*	20	VJ761500	Slide Guide	Right	スライドガイド（右）		
*	21	VJ758100	Control Panel		コントロールパネル		
	22	CB059250	Knob	BL-YE	スライドツマミ	MASTER VOLUME	01
	23	VD214900	Spacer-S		防振スペーサーS		01
	24	VD135000	Escutcheon	BL	エスカッション		01
	25	CA016330	Dust Proof Cloth		防塵クロス		01
	26	CB059240	Knob	BL	プッシュツマミ		01
*	27	NX005170	Circuit Board	PN	PNシート		
	28	VC530600	Keyboard Assembly	A88 K6	AE鍵盤Ass'y		70
	29	VD401700	Felt	1226X40X1 RE	フェルト（赤）		03
	30	LB202280	Voltage Selector	HXW0131-01-910	電圧切替器	A,M,X	03
	31	VF727100	Plate, Voltage Selector		切替器取付板	A,M,X	04
	32	EV108030	Hexagonal Nut	3.0 ZMC2Y	フランジ付六角ナット	A,M,X	01
	33	ED330106	Bind Head Screw	3.0X10 FCM3BL	バインド小ネジ	A,M,X	01
	34	XE994A00	Power Transformer		電源トランス	J,U,C	14
	34	XE996A00	Power Transformer		電源トランス	H,B	14
	34	XE999B00	Power Transformer		電源トランス	A,M,X	14
	35	VG186700	Shield Cover		シールドカバー	U	06
*	36	VJ743200	Power Amplifer Unit	PU60B	PU60Bシート Assy	J,M,X	
*	36	VJ743300	Power Amplifer Unit	PU60B	PU60Bシート Assy	U,C	
*	36	VJ743400	Power Amplifer Unit	PU60B	PU60Bシート Assy	H,B,A	
*	36-1	VJ743500	Circuit Board	PU60BM	PU60BMシート	J,M,X	
*	36-1	VJ743600	Circuit Board	PU60BM	PU60BMシート	U,C	
*	36-1	VJ743700	Circuit Board	PU60BM	PU60BMシート	H,B,A	
*	36-2	NX005180	Circuirt Board	PU60BP	PU60BPシート		
	36-3	EX000390	Flat Washer	3.0X8X0.5 ZMC2Y	平座金みがき丸	5pcs	01
	36-4	EA030306	Pan Head Screw	3.0X30 ZMC2Y	ナベ小ネジ	5pcs	01
	36-5	ED030066	Bind Head Screw	3.0X6 ZMC2Y	バインド小ネジ	20pcs	01
	37	VG173900	Shield Cover, PU		シールドカバーPU		07
*	38	VK326000	Circuit Board	WRL	WRLシート		
	39	VD411300	Bushing	TA-310	カラーブッシュ		01
	40	VD411400	Bushing	TB-300	カラーブッシュ		01
*	41	VJ730400	Circuit Board	DM	DMシート		
*	42	VJ738600	Holder, DM Circuit Board		DMシート取付金具		
*	43	VJ698000	Stacked Wire, PK		PK束線		
	44	VH082300	Connector Panel		コネクターパネル		01
	45	VF701300	Speaker Box	Left	スピーカボックス(左)		07
	46	VF701400	Speaker Box	Right	スピーカボックス(右)		07
*	47	VJ758200	Back Cover, Speaker Box		スピーカボックス裏板		
*	48	XC892A00	Speaker	5cm 8Ω 60W	スピーカ		
*	49	XI073A00	Speaker	13cm 8Ω 30W	スピーカ		
*	50	VK348200	Cup Screw	4.0X18 ZMC2Y	カップスクリュー		
*	51	VJ743800	Net		金網		
*	52	VK227600	Panel Support Assembly		パネル受け金具Ass'y		
	53	VD526300	Angle Bracket, Keyboard		反り止め金具		07
	54	VD521600	Bushing		自在ブッシュ		01
*	55	VK020200	MK Cushion	88K	クッション材		06
*	56	VJ722800	Side Case	Left	サイドケース（左）		

＊：New Parts（新規部品） NR

ランク：Japan Only

	Ref. No.	Part No.	Description		部品名	Remarks	ランク
*	57	VJ722700	Side Case	Right	サイドケース（右）		
*	58	VJ722300	Front Rail Assembly		口金Ass'y		
	59	VD947800	Data Line Filter	ESD-R-25D-B	データラインフィルタ		05
	60	EV203046	FLat Washer	φ4 FCM3BL	平座金		01
	61	EW300220	Metal Fitting	M5 ZMC2BL	シャーシ締付け座金		01
	62	VD986100	Nut	B6.0X10.5 ZMC2Y	鬼目ナット		01
	63	VG297600	Guide Screw	4X14	ガイドスクリュー		01
	64	ED330066	Bind Head Screw	3.0X6 FCM3BL	バインド小ネジ		01
	65	ED030106	Bind Head Screw	3.0X10 ZMC2Y	バインド小ネジ		01
	66	ED030206	Bind Head Screw	3.0X20 ZMC2Y	バインド小ネジ		01
	67	ED040066	Bind Head Screw	4.0X6 ZMC2Y	バインド小ネジ		01
	68	ED340066	Bind Head Screw	4.0X6 FCM3BL	バインド小ネジ		01
	69	ED040146	Bind Head Screw	4.0X8 ZMC2Y	バインド小ネジ		01
	70	ED340126	Bind Head Screw	4.0X12 FCM3BL	バインド小ネジ		01
	71	ED040146	Bind Head Screw	4.0X14 ZMC2Y	バインド小ネジ		01
	72	ED340186	Bind Head Screw	4.0X18 ZMC2BL	バインド小ネジ		01
	73	ED340206	Bind Head Screw	4.0X20 FCM3BL	バインド小ネジ		01
	74	ED350206	Bind Head Screw	5.0X20 ZMC2BL	バインド小ネジ		01
	75	EI030066	Bind Head Tapping Screw	3.0X6 ZMC2Y	ﾊﾞｲﾝﾄﾞﾀｯﾋﾟﾝｸﾞﾈｼﾞ		01
	76	EI030086	Bind Head Tapping Screw	3.0X8 ZMC2Y	ﾊﾞｲﾝﾄﾞﾀｯﾋﾟﾝｸﾞﾈｼﾞ		01
	77	EI330086	Bind Head Tapping Screw	3.0X8 FCM3BL	ﾊﾞｲﾝﾄﾞﾀｯﾋﾟﾝｸﾞﾈｼﾞ		01
	78	EI335126	Bind Head Tapping Screw	3.5X12 FCM3BL	ﾊﾞｲﾝﾄﾞﾀｯﾋﾟﾝｸﾞﾈｼﾞ		01
	79	EI040106	Bind Head Tapping Screw	4.0X10 ZMC2Y	ﾊﾞｲﾝﾄﾞﾀｯﾋﾟﾝｸﾞﾈｼﾞ		01
	80	EI050086	Bind Head Tapping Screw	5.0X8 ZMC2Y	ﾊﾞｲﾝﾄﾞﾀｯﾋﾟﾝｸﾞﾈｼﾞ		01
	81	EK030060	BW Head Tapping Screw	3.0X8 ZMC2Y	BWﾍｯﾄﾞﾀｯﾋﾟﾝｸﾞﾈｼﾞ		01
	82	ED030086	Bind Head Screw	3.0X8 FCM3BL	バインド小ネジ		01
	83	VJ423000	Jack Angle		ジャック取付金具		03
	84	ET400040	Nut	12X14X2 FCM3BL	管用ナット	2pcs	01
	85	EI330086	Bind Head Tapping Screw	3.0X8 FCM3BL	ﾊﾞｲﾝﾄﾞﾀｯﾋﾟﾝｸﾞﾈｼﾞ	2pcs	01
	86	CB830070	Cord Holder	K105G	コード押さえ		01
*	87	NX005190	Circuit Board	JACK	ＪＡＣＫシート		
			Accessory		付属品		
*	a	VJ741100	Screw Set		ネジセット		
	a-1	ED360206	Bind Head Screw	6.0X20 FCM3BL	バインド小ネジ	4pcs	02
	a-2	EA060700	Pan Head Screw	6.0X70 ZMC2Y	ナベ尖先小ネジ	4pcs	01
	a-3	ET400070	Joint Connector	6.0X13 ZMC2BL	ジョイントコネクター	4pcs	01
	a-4	ED360146	Bind Head Screw	6.0X14 ZMC2BL	バインド小ネジ	4pcs	02
	a-5	VF850000	Truss Screw	6.0X14 ZMC2BL	トラス小ネジ	4pcs	01

＊：New Parts（新規部品）　NR　　ランク：Japan Only

■STAND ASSEMBLY（スタンド Ass'y）

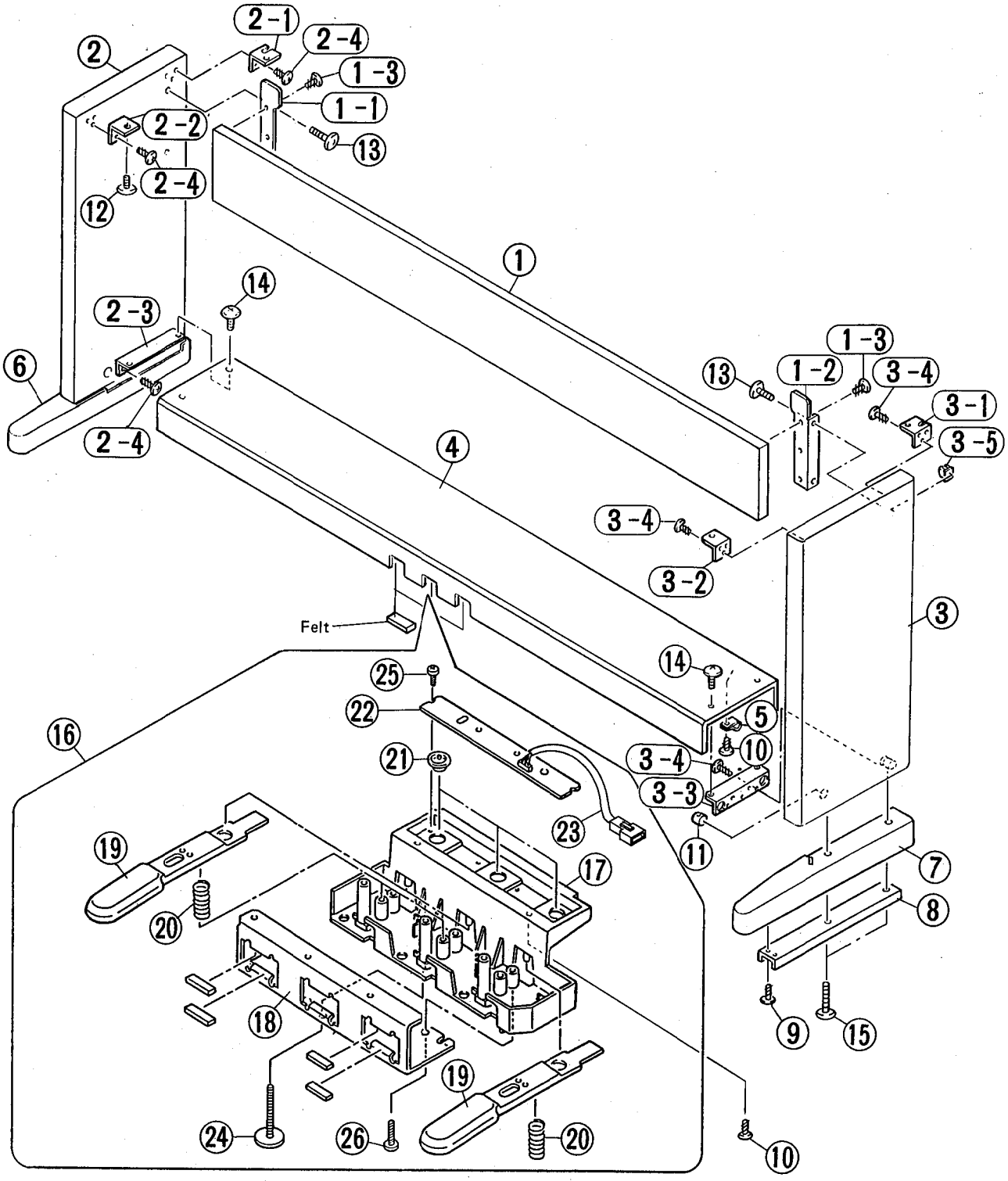

	Ref. No.	Part No.	Description		部品名	Remarks	ランク
			Stand Assembly		スタンドAss'y	CLP560	
*	1	VJ624200	Back top board Assembly		背面框Ass'y		
	1-1	VH666500	Holder, Back top Board	Left	背面固定金具（左）		03
	1-2	VH726800	Holder, Back Top Board	Right	背面固定金具（右）		03
	1-3	EI340166	Bind Head Tapping Screw	4.0X16 FCM3BL	ﾊﾞｲﾝﾄﾞﾀｯﾋﾟﾝｸﾞﾈｼﾞ	6pcs	01
*	2	VJ614600	Side Board	Left	側板集成（左）		
	2-1	VA880700	Holder	Left	受金具（左）		01
	2-2	VA880600	Angle		アングル		02
	2-3	VF805300	Angle Bracket, Pedal Box		ﾍﾟﾀﾞﾙﾎﾞｯｸｽ取付金具		02
	2-4	EI335206	Bind Head Tapping Screw	3.5X20 FCM3BL	ﾊﾞｲﾝﾄﾞﾀｯﾋﾟﾝｸﾞﾈｼﾞ	11pcs	01
*	3	VJ614700	Side Board	Right	側板集成（右）		
	3-1	VA880900	Holder	Right	受金具（右）		01
	3-2	VA880800	Angle Bracket		アングル		02
	3-3	VF805300	Angle Bracket, Pedal Box		ﾍﾟﾀﾞﾙﾎﾞｯｸｽ取付金具		02
	3-4	EI335206	Bind Head Tapping Screw	3.5X20 FCM3BL	ﾊﾞｲﾝﾄﾞﾀｯﾋﾟﾝｸﾞﾈｼﾞ	11pcs	01
*	3-5	VG598700	NK Clamper	DKN-5 BL	ＮＫクランプ		
* *	4	VJ995700	Pedal Box		ペダルボックス	J	
*	4	VJ995600	Pedal Box		ペダルボックス	U,C,H,B,A,M,X	
	5	CB900030	Cord Clamper	NK-2N	コード押え		01
	6	VF631200	Stand Base	Left	妻土台（左）		07
	7	VF631300	Stand Base	Right	妻土台（右）		07
	8	VA881100	Angle Bracket		妻土台金具		03
	9	EI040106	Bind Head Tapping Screw	4.0X10 ZMC2Y	ﾊﾞｲﾝﾄﾞﾀｯﾋﾟﾝｸﾞﾈｼﾞ		01
	10	EI040146	Bind Head Tapping Screw	4.0X14 ZMC2Y	ﾊﾞｲﾝﾄﾞﾀｯﾋﾟﾝｸﾞﾈｼﾞ		01
	11	ET400070	Joint Connector	6.0X13 ZMC2BL	ジョイントコネクター		01
	12	ED360146	Bind Head Screw	6.0X14 ZMC2BL	バインド小ネジ		02
	13	ED360206	Bind Head Screw	6.0X20 FCM3BL	バインド小ネジ		02
	14	VF850000	Truss Screw	6.0X14 ZMC2BL	トラス小ネジ		01
	15	EA060700	Pan Head Screw	6.0X70 ZMC2Y	ナベ尖先小ネジ		01
* *	16	VJ755600	Pedal Assembly		ペダルAss'y	J	
*	16	VJ999600	Pedal Assembly		ペダルAss'y	U,C,H,B,A,M,X	
	17	VF645700	Pedal Frame	BL	ペダルフレーム		05
	18	VF657700	Stopper, Pedal		ペダル支持金具		04
	19	VG789900	Pedal		ペダル		07
	20	VF658100	Pedal Spring		ペダルバネ		01
	21	VF815100	Rubber Contact		接点ゴム		01
	22	VG795500	Circuit Board	PEDAL	ＰＥＤＡＬシート		
* *	23	VJ743900	PK Cable		ＰＫケーブル	J	
*	23	VJ744000	PK-DLF Cable		ＰＫ－ＤＬＦケーブル	U,C,H,B,A,M,X	
	24	VF851300	Adjuster		丸形アジャスター		01
	25	EK330030	BW Head Tapping Screw	3.0X10 FCM3BL	BWﾍｯﾄﾞﾀｯﾋﾟﾝｸﾞﾈｼﾞ		01
	26	EI350256	Bind Head Tapping Screw	5.0X25 ZMC2BL	ﾊﾞｲﾝﾄﾞﾀｯﾋﾟﾝｸﾞﾈｼﾞ		02

＊：New Parts（新規部品）　NR　　ランク：Japan Only

■SLIDE COVER ASSEMBLY（スライド蓋Ass'y）

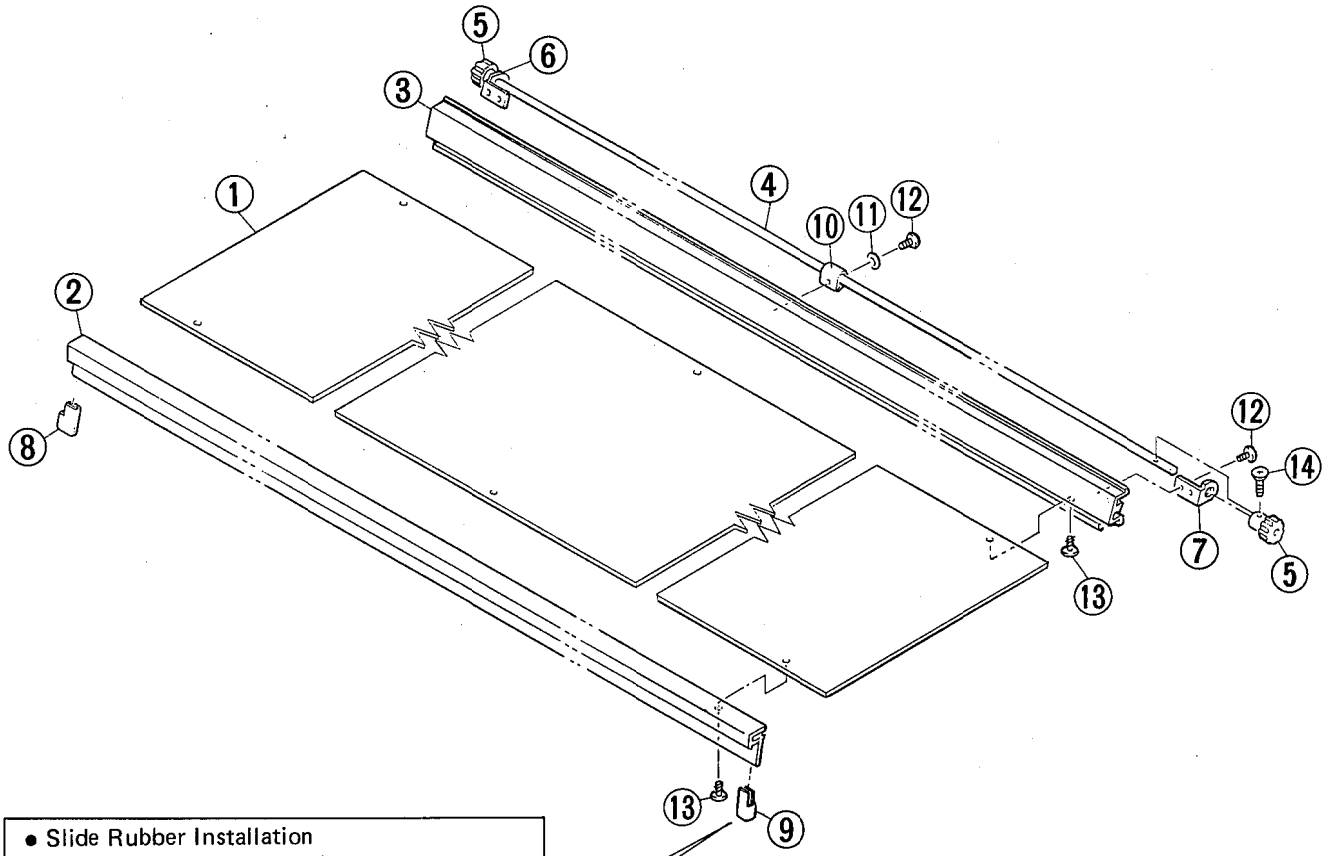

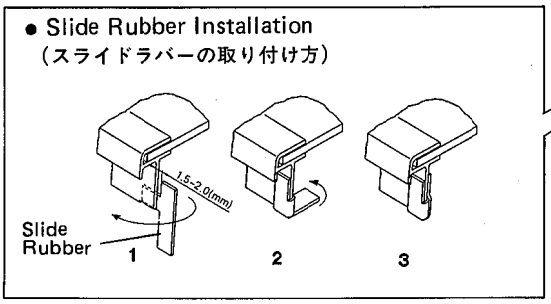

	Ref. No.	Part No.	Description		部品名	Remarks	ランク
*		VJ722200	Slide Cover Assembly		スライド蓋Ass'y	CLP560	
	1	VF700700	Acryl Cover		アクリル蓋		16
**	2	VJ722000	Slide Cover Sash	Front	鍵蓋サッシュ（前）		
**	3	VJ722100	Slide Cover Sash	Rear	鍵蓋サッシュ（後）		
	4	VF700800	Slide Cover Rod		連動棒		07
	5	VD139800	Slide Cover Gear		ピニオンギヤ	2pcs	02
	6	VF701000	Angle, Slide Cover Rod	Left	連動棒取付金具（左）		01
	7	VF701100	Angle, Slide Cover Rod	Right	連動棒取付金具（右）		01
	8	VG058800	Slide Rubber	Left	スライドラバー（左）		01
	9	VG058900	Slide Rubber	Right	スライドラバー（右）		01
	10	VE085300	Tape	BL	振れ止めテープ		02
	11	ET500070	Flat Washer	4X10X0.8 ZMC2BL	平座金みがき丸		01
	12	ED030066	Bind Head Screw	3.0X6 ZMC2Y	バインド小ネジ	5pcs	01
	13	EI326056	Bind Head Tapping Screw	2.6X5 FCM3BL	ﾊﾞｲﾝﾄﾞﾀｯﾋﾟﾝｸﾞﾈｼﾞ	18pcs	01
	14	EB030106	Flat Head Screw	3.0X10 ZMC2Y	皿小ネジ	2pcs	

＊：New Parts（新規部品）　NR　　ランク：Japan Only

■KEYBOARD ASSEMBLY（鍵盤Ass'y）

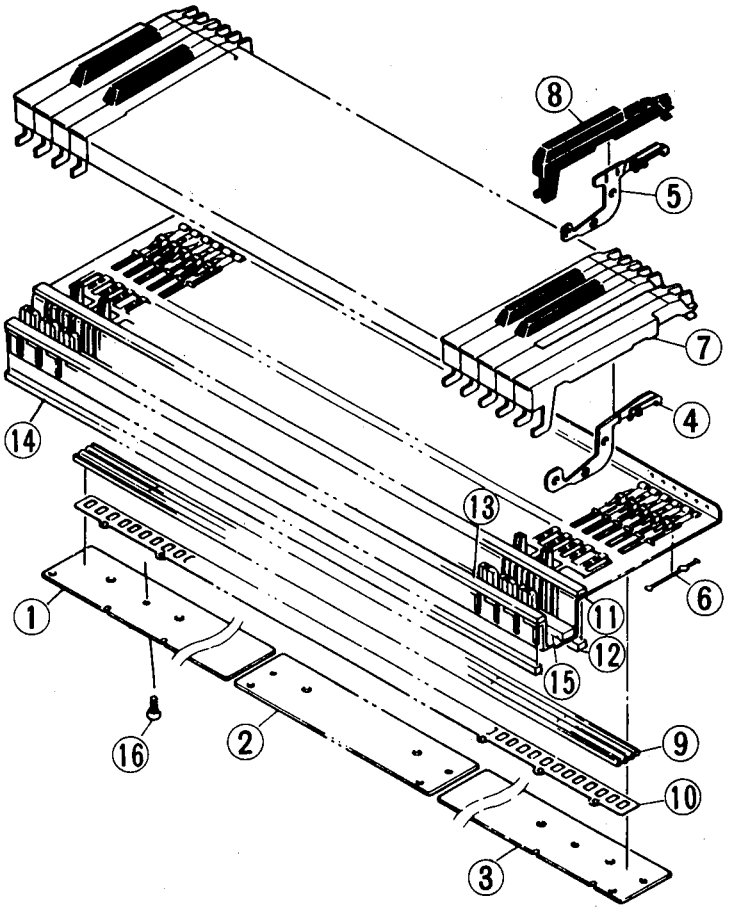

Ref. No.	Part No.	Description		部品名	Remarks	ランク
	VC530600	Keyboard Assembly	AE 88 K6	ＡＥ鍵盤Ａss'y	CLP560	70
1	VC796500	Circuit Board	AE 88L	ＡＥ８８Ｌシート		09
2	VC796300	Circuit Board	AE C	ＡＥ　Ｃシート		10
3	VC796600	Circuit Board	AE 88H	ＡＥ８８Ｈシート		08
4	VD317300	Hammer Assembly	White Keys	ハンマー白鍵Ａss'y		04
5	VD317900	Hammer Assembly	Black Keys	ハンマー黒鍵Ａss'y		04
6	VC795100	Key Spring	AE MK	鍵バネ		01
7	VC507100	White Key	C	白鍵Ｃ		03
7	VC507200	White Key	D	白鍵Ｄ		03
7	VC507300	White Key	E	白鍵Ｅ		03
7	VC507400	White Key	F	白鍵Ｆ		03
7	VC507500	White Key	G	白鍵Ｇ		03
7	VC507600	White Key	A	白鍵Ａ		03
7	VC507700	White Key	B	白鍵Ｂ		03
7	VC507800	White Key	C'	白鍵Ｃ		03
7	VC508100	White Key	A'	白鍵Ａ		03
8	VC508300	Black Key		黒鍵		02
9	VC799200	Rubber Contact	AE 88	可動導電ゴム		08
10	VC799300	Insulation Spacer	AE 88	絶縁スペーサー		03
11	VC984900	Felt	A	フェルト		04
12	VI437200	Cushion		クッション		05
13	VC985100	Felt	C	フェルト		03
14	VC985200	Felt	D	フェルト		03
15	VC985300	Felt	E	フェルト		05
16	EI030106	Bind Head Tapping Screw	3.0X10 ZMC2Y	ﾊﾞｲﾝﾄﾞﾀｯﾋﾟﾝｸﾞﾈｼﾞ		01
16	EI330106	Bind Head Tapping Screw	3.0X10 ZMC2BL	ﾊﾞｲﾝﾄﾞﾀｯﾋﾟﾝｸﾞﾈｼﾞ		01

＊：New Parts（新規部品）　NR　　ランク：Japan Only

■BENCH（椅子）　BC7

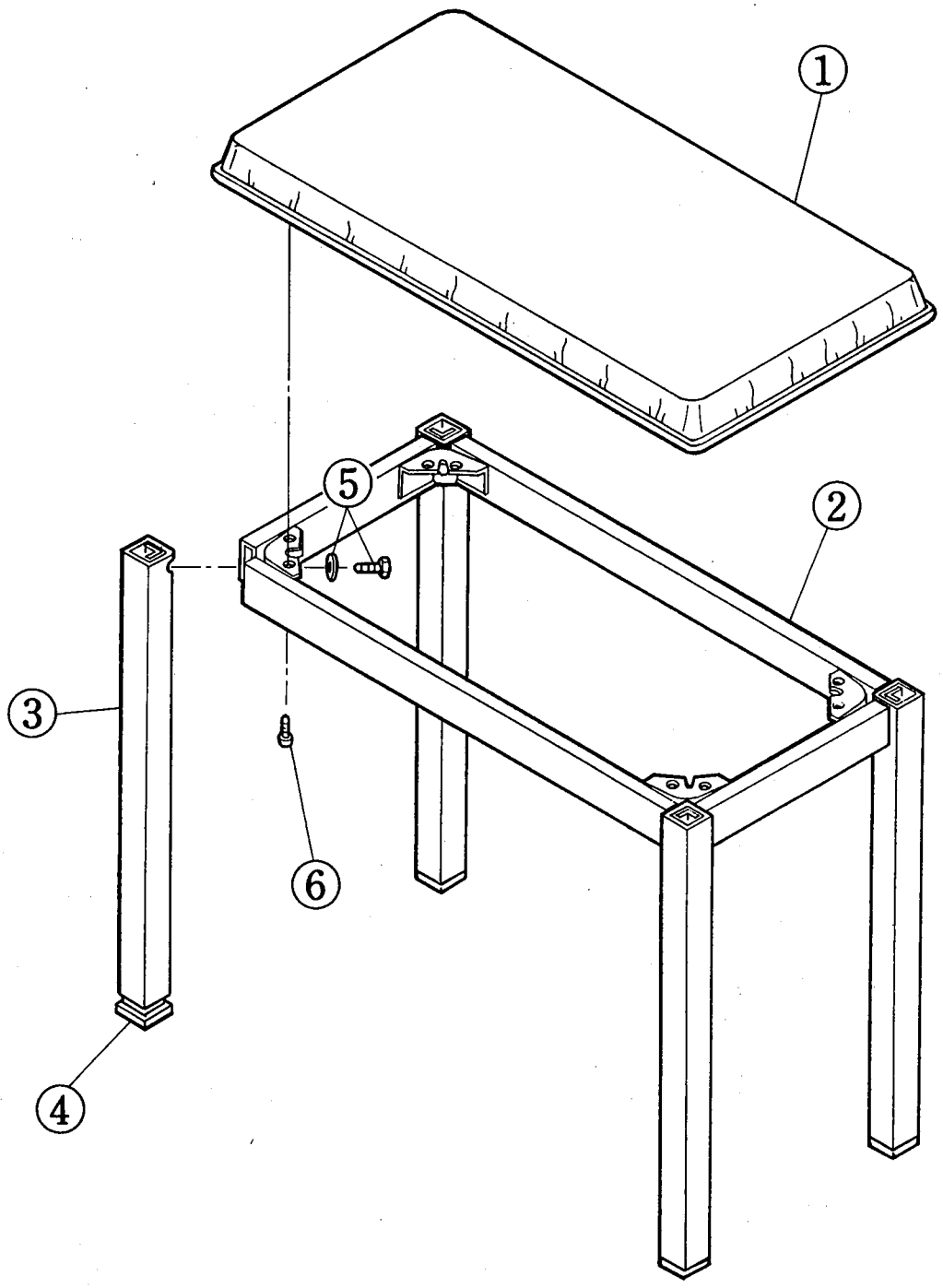

Ref. No.	Part No.	Description		部品名	Remarks	ランク
		Bench	BC-7	椅子	CLP560	
1	NX003280	Bench Board Assembly		座板Ass'y	J	16
1	NX003320	Bench Board Assembly		座板Ass'y	A,B,C,H,M,X	16
1	NX003330	Bench Board Assembly		座板Ass'y	U	16
2	AX000190	Bench Frame Assembly		座枠Ass'y		18
3	AX000200	Leg Pipe Assembly		脚パイプAss'y		05
4	CX002990	Leg Cap		脚キャップ		03
5	EX000410	Hexagonal Bolt + SP Washer		バネ座金六角ボルト		01
6	EJ350206	Pan Head Tapping Screw	5.0X20 FCM3BL	ナベタッピングネジ		01

＊：New Parts（新規部品）　NR

ランク：Japan Only

■CLP-560 OVERALL CIRCUIT DIAGRAM(CLP-560総回路図)

1430

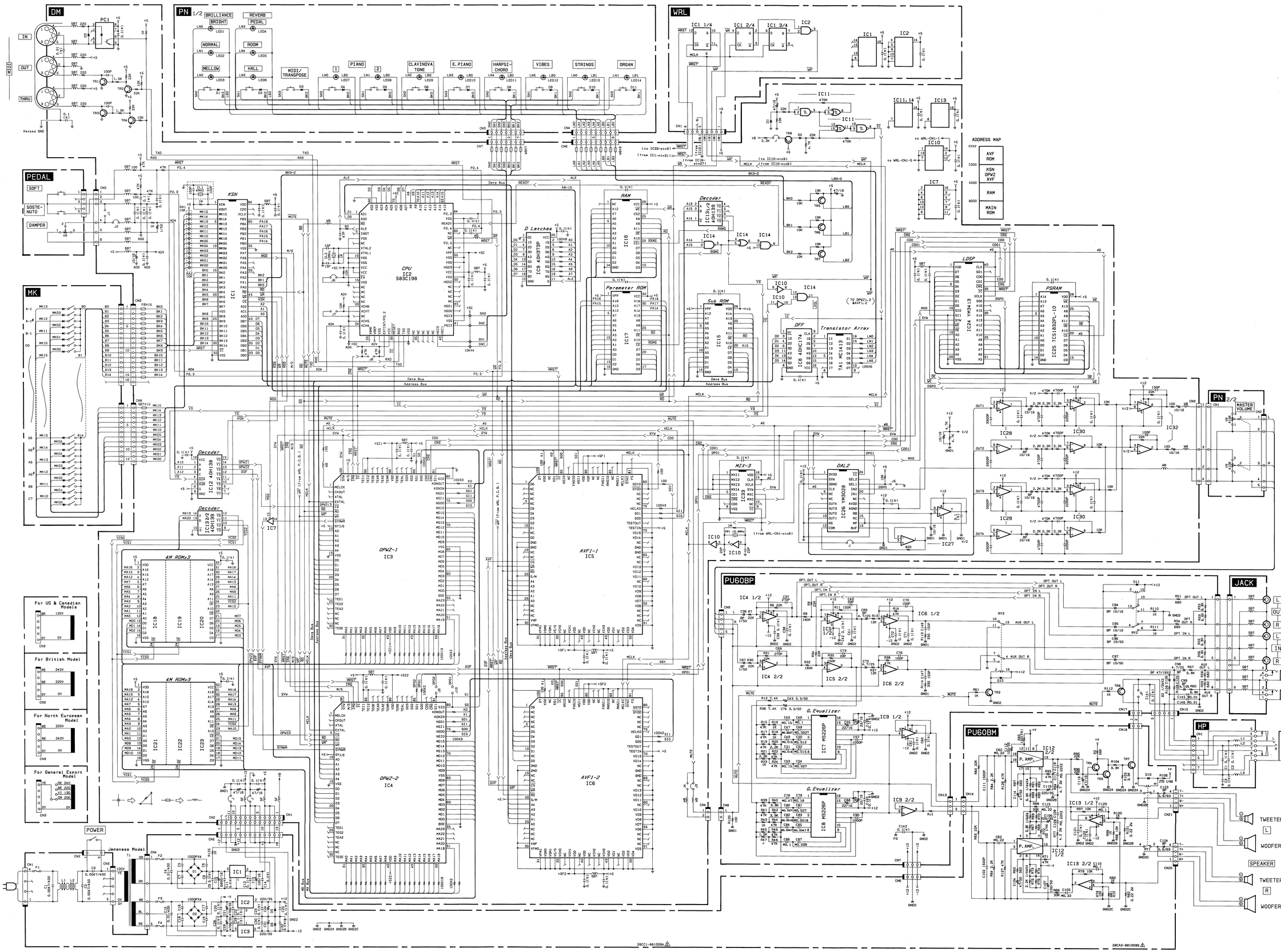

Notes)

	Circuit Board :	DM (VJ730400) XH992A0
1.	IC :	
	IC 1:	YM6633 (XH543A00) KSN
	IC 2:	S83C198-ROI12 (XI071A00) CPU
	IC 3,4:	YM7132 (XH235A00) OPWZ
	IC 5,6:	YSF206 (XI069A00) AVF-1
	IC 7:	TC40H367P (IGI073J00) BUFFER
	IC 8:	TC40H174P (IGO641D0) D FF
	IC 9:	TC40H373PYH (IGO785D0) LATCH
	IC10:	TC40H004P (IGO51D00) INVERTER
	IC11:	SN74HC132N (IRI013Z60) NAND
	IC12:	TC40H138P (IGI119O0) DEMULTIPLEXER
	IC13:	TC40H139P (IGO783O0) DECODER
	IC14:	TC40H000P (IGO80700) QUAD NAND
	IC15:	(XI052R00) SUB ROM
	IC16:	LH5164D-10L (XF876A00) SRAM 64K
	IC17:	(XI454A00) PARAMETER 4M
	IC18:	HN62314BPDS1 (XI455A00) ROM-1 4M
	IC19:	HN62314BPDS2 (XI456A00) ROM-2 4M
	IC20:	HN62314BPDS3 (XI457A00) ROM-3 4M
	IC21:	HN62314BPDS4 (XI458A00) ROM-4 4M
	IC22:	HN62314BPDS5 (XI459A00) ROM-5 4M
	IC23:	HN62314BPDS6 (XI460A00) ROM-6 4M
	IC24:	YM3413 (XK449A00) LDSP
	IC25:	TC51832PL-10 (XC628A00) PSRAM 256K
	IC26:	YM3028 (XE789A00) DAL2
	IC27-29:	NJM4560ED (IGO40000) OP AMP.
	IC30-32:	μPC4570HA (XB247001) OP AMP.
	IC33:	MIX3 (IG156010) MIXER
2.	Photo Coupler	
	PC 1:	6N137 (VD473Z00)
3.	Transistor	
	TR 1-4:	2SC1740S R,S (IC174070)
	TR 5-8:	2SA1015 O,Y (IA101570)
4.	Transistor Array	
	TA 1:	MC1413P (VH4415O0)
5.	Diode	
	D 1-3:	1SS133 (IF003450)
6.	Resistor Array	
	RA 1:	RGLD8X103J (VE445200) 10K×8
	RA 2:	RGLD4X103J (VE443500) 10K×4
7.	Semiconductive Cera. Cap. marked 0.1(≡):	0.1μ 16V M (VH740700)
8.	Coil	
	SN:	SF-T3-20-01 (VJ528500) 10μ
	SBT:	FLSR200NT (VB835O00) 20μ or SBT-0460T (VD473700) 60μ
9.	Ferrite Bead	
	FB:	BLO2RN1-R62T4 (GE300610)
	WB:	BLO2RN2-R62T4 (GE300670)
10.	Ceramic Resonator	
	CL 1:	CST4.00MGW040 (VI653000) 4MHz
	CL 2:	12M CSA12.0MT (DJO07700) 12MHz
11.	Quartz Crystal Unit	
	CR 1:	12.8M AT-49 (VI460600) 12.8MHz
12.	DIN Socket	
	JK 1:	JXT0820-01 (VF647300)
13.	Jumper Wire	MIDI IN,OUT,THR
	J 2,3,6,:	installed
	J 1,4,5,7-10:	not installed

IC15	J6
O	O
X	X

Notes)

	Circuit Board :	WRL (VK326000) XI67080
1.	IC	
	IC 1:	TC40H175P 9G095700 D.FF
	IC 2:	TC40H000P (IG080700) QUAD NAND
2.	Semiconductive Cera. Cap. marked 0.1(≡):	0.1μ 16V M (VH740700)

Notes)

	Circuit Board :	PN (NX005170) XH996A0
1.	Diode :	1SS133 (IF003450)
2.	LED :	SLZ-190B-03 RE (VD180000)
3.	Side Pot.	
	MASTER VLUME:	RS30112A9300B (VK369000) A10Kx2
4.	Push Switch:	KEC10901 (KA906550)

Notes)

	Circuit Board :	HP (VF710500) XE779B0
1.	Semiconductive Cera. Cap. C 1-3:	0.1μ 16V M (FZ006590)
2.	Coil	
	L 1-3:	FLSR200GN 20μ (VB971100)
3.	Phone Jack	YK821-5006 (LB101870) PHONES

Notes)

	Circuit Board :	PU60BM (VJ743500) XE767E0 ,J,M,X
		PU60BM (VJ743600) XE767E0 U,C,
		PU60BM (VJ743700) XE767E0 H,B,A
1.	IC	
	IC 1:	NJM7805FA (XC719O01) +5V REGULATOR
	IC 2:	NJM78M12FA (XD341A00) +12V REGULATOR
	IC 3:	NJM79M12FA (XD343A00) -12V REGULATOR
	IC12:	STK4151V (XD038O01) POWER AMP.
	IC13:	μPC4570HA (XB247001) OP AMP.
2.	Transistor	
	TR 4,5,7:	2SC1815 GR (IC181530)
3.	Diode	
	D 5,6,10:	11ES4 (VB481900)
4.	Diode Stack	
	D 1,2:	4D4B42 3A 200V (IH001790)
5.	Metal Oxide Film Resistor	
	R 77,94:	4.7Ω 2W J (VC755500)
	R 82,101:	0.22Ω 2W J (VC751900)
6.	Fuse Resistor	
	R 85:	100Ω 1/4 K (HW995100)
7.	Electrolytic Cap.	
	C 10:	6800μ 16.0V (UJ739680)
	C 21,28:	470μ 35.0V (UJ735470)
8.	Ceramic Cap.	
	C 1,4:	0.01μ 400V (FI384100) U.C.S.V or 0.01μ 400V (FI494100) J.U.C.S
	C 2,3:	4700P 400V (FI383470) U.C.S or 4700P 400V (FI493470) J.U.C.S
9.	Semiconductive Cera. Cap.	
	C 9,11,12,14, 20,22,23,25, 27,29,30,32, 121,122:	0.1μ 50V Z (VD287800)
10.	Coil	
	L 1:	SU10V-20010 (VD293400) 10mH
	L 2:	SU10V-D20010 (VF790900) 10μ
11.	Relay	
	RY 1:	DC DH24D2-DTM1 (KC001940) 24V or DC G5R-2232P (VC278600) 24V
12.	Fuse	
	F 1:	T 2.50A J 250V (KB000420) J,M,X
		T 2.50A UC 250V (KB002680) U,C
	F 2-4:	T 1.25A S 250V (KB000880) H,B,A
		T 4.00A J 250V (KB000380) J,M,X
		T 4.00A UC 250V (KB002840) U,C
		T 4.00A S 250V (KB000780) H,B,A

Notes)

	Circuit Board :	JACK (NX005190) XI0508O
1.	Phone Jack	
	AUX-OUT:	HLJ0521 MONO (LB202330) AUX. OUT R,L/L+R
2.	Pin Jack	
	L,R:	YKC21-0188 (VI145300) OPTIONAL IN, OUT
3.	Coil	
	L6,8-12:	FLSR200NT 20μ (VB835000) or SBT-0460T 60μ (VD473700)