Clavinova®

CLP-525B/CLP-525R/CLP-525PE

SERVICE MANUAL



CLP-525B



CLP-525R



CLP-525PE

■ CONTENTS

SPECIFICATIONS 3
PANEL LAYOUT 4
DISASSEMBLY PROCEDURE 5
LSI PIN DESCRIPTION 19
CIRCUIT BOARDS 22
TEST PROGRAM 30
DM CIRCUIT BOARD CHECK METHOD 34
INITIAL SETTINGS 35
INITIALIZING THE SETTINGS 35
SYSTEM BOOTING FLOWCHART 36
PARTS LIST
BLOCK DIAGRAM
CIRCUIT BOARD LAYOUT & WIRING
OVERALL CIRCUIT DIAGRAM

CL 001897

YAMAHA

HAMAMATSU, JAPAN

Copyright (c) Yamaha Corporation. All rights reserved. '14.01

IMPORTANT NOTICE

This manual has been provided for the use of authorized Yamaha Retailers and their service personnel. It has been assumed that basic service procedures inherent to the industry, and more specifically Yamaha Products, are already known and understood by the users, and have therefore not been restated.

WARNING : Failure to follow appropriate service and safety procedures when servicing this product may result in personal injury, destruction of expensive components and failure of the product to perform as specified. For these reasons, we advise all Yamaha product owners that all service required should be performed by an authorized Yamaha Retailer or the appointed service representative.

IMPORTANT : This presentation or sale of this manual to any individual or firm does not constitute authorization certification, recognition of any applicable technical capabilities, or establish a principal-agent relationship of any form.

The data provided is belived to be accurate and applicable to the unit(s) indicated on the cover. The research engineering, and service departments of Yamaha are continually striving to improve Yamaha products. Modifications are, therefore, inevitable and changes in specification are subject to change without notice or obligation to retrofit. Should any discrepancy appear to exist, please contact the distributor's Service Division.

WARNING : Static discharges can destroy expensive components. Discharge any static electricity your body may have accumulated by grounding yourself to the ground bus in the unit (heavy gauge black wires connect to this bus.)

IMPORTANT : Turn the unit OFF during disassembly and parts replacement. Recheck all work before you apply power to the unit.

WARNING: This product contains chemicals known to the State of California to cause cancer, or birth defects or other reproductive harm.

DO NOT PLACE SOLDER, ELECTRICAL/ELECTRONIC OR PLASTIC COMPONENTS IN YOUR MOUTH FOR ANY REASON WHAT SO EVER!

Avoid prolonged, unprotected contact between solder and your skin! When soldering, do not inhale solder fumes or expose eyes to solder/flux vapor!

If you come in contact with solder or components located inside the enclosure of this product, wash your hands before handling food.

IMPORTANT NOTICE FOR THE UNITED KINGDOM

Connecting the Plug and Cord

IMPORTANT. The wires in this mains lead are coloured in accordance with the following code:

BLUE	: NEUTRAL
BROWN	: LIVE

As the colours of the wires in the mains lead of this apparatus may not correspond with the coloured markings identifying the terminals in your plug proceed as follows:
The wire which is coloured BLUE must be connected to the terminal which is marked with the letter N or coloured BLACK.
The wire which is coloured BROWN must be connected to the terminal which is marked with the letter L or coloured RED.
Making sure that neither core is connected to the earth terminal of the three pin plug.

• This applies only to products distributed by Yamaha-Kemble Music (U.K.) Ltd. (2 wires)

WARNING

Components having special characteristics are marked ⚠ and must be replaced with parts having specification equal to those originally installed.

SAVING DATA



Be sure to perform it

Saved data may be lost due to malfunction or incorrect operation. Save important data to external device such as a computer.

■ SPECIFICATIONS

Size/Weight	Width [For models with polished finish]		1350 mm (53-1/8") [1353 mm (53-1/4")]
	Height [For models with polished finish]	Without Music Rest	845 mm (33-1/4") [848 mm (33-3/8")]
		With Music Rest	999 mm (39-5/16") [1000 mm (39-3/8")]
	Depth [For models with polished finish]	Without Music Rest	414 mm (16-5/16") [415 mm (16-5/16")]
		With Music Rest	414 mm (16-5/16") [415 mm (16-5/16")]
	Weight [For models with polished finish]		43.0 kg (94 lbs., 13 oz) [45.0 kg (99 lbs., 3 oz)]
Control Interface	Keyboard	Number of Keys	88
		Type	GH3 (Graded Hammer 3) keyboard with synthetic ivory keytops
		Touch Response	Hard/Medium/Soft/Fixed
	Pedal	Number of Pedals	3
		Half Pedal	Yes (Damper)
		Functions	Sustain, Sostenuto, Soft
	Panel Language		English
Cabinet	Key Cover Style		Sliding
	Music Rest		Yes
Voices/ Tone Generation	Piano Voice		Pure CF Sound Engine
	Number of Polyphony (Max.)		256
	Number of Voices		10
Effects/Functions	Reverb		4 types
	Damper Resonance		Yes
	Dual		Yes
	Duo		Yes
	Intelligent Acoustic Control (IAC)		Yes
Recording/Playback (MIDI data only; audio not supported)	Preset	Number of Preset Songs	10 Demo Songs, 50 Piano Preset Songs
	Recording	Number of Songs	1
		Number of Tracks	2
		Data Capacity (Max.)	Approx. 100 KB/Song (Approx. 11,000 notes)
	Compatible Data Format	Recording	SMF (Format 0)
		Playback	SMF (Format 0 & 1)
Overall Controls	Metronome		Yes
	Tempo Range		5 – 280
	Transpose		-6 – 0 – +6
	Tuning		414.8 – 440.0 – 466.8 Hz
Storage	Internal Memory		Total maximum size approx. 900 KB (User song: One song approx. 100 KB, Loading song data from a computer: Up to 10 songs)
Connectivity	Headphones		Yes (x 2)
	USB TO HOST		Yes
Sound System	Amplifiers		20 W x 2
	Speakers		Oval (12 cm x 6 cm) x 2
	Acoustic Optimizer		Yes
Power Supply	Power Consumption		13 W (when using the PA-300C)
	Auto Power Off Function		Yes (Approx. 30 minutes)
Accessories			• Owner's Manual • Quick Operation Guide • "50 Greats for the Piano" (Music Book) • Online Member Product Registration • AC power adaptor: PA-300C or an equivalent recommended by Yamaha* • Power cord* • Bench* * Included or optional depending on your locale
Options (May not be available depending on your locale.)			• USB MIDI Interface for iPhone/iPod touch/iPad: i-UX1 • Headphones: HPE-160 • AC power adaptor: PA-300C or an equivalent recommended by Yamaha

■ PANEL LAYOUT

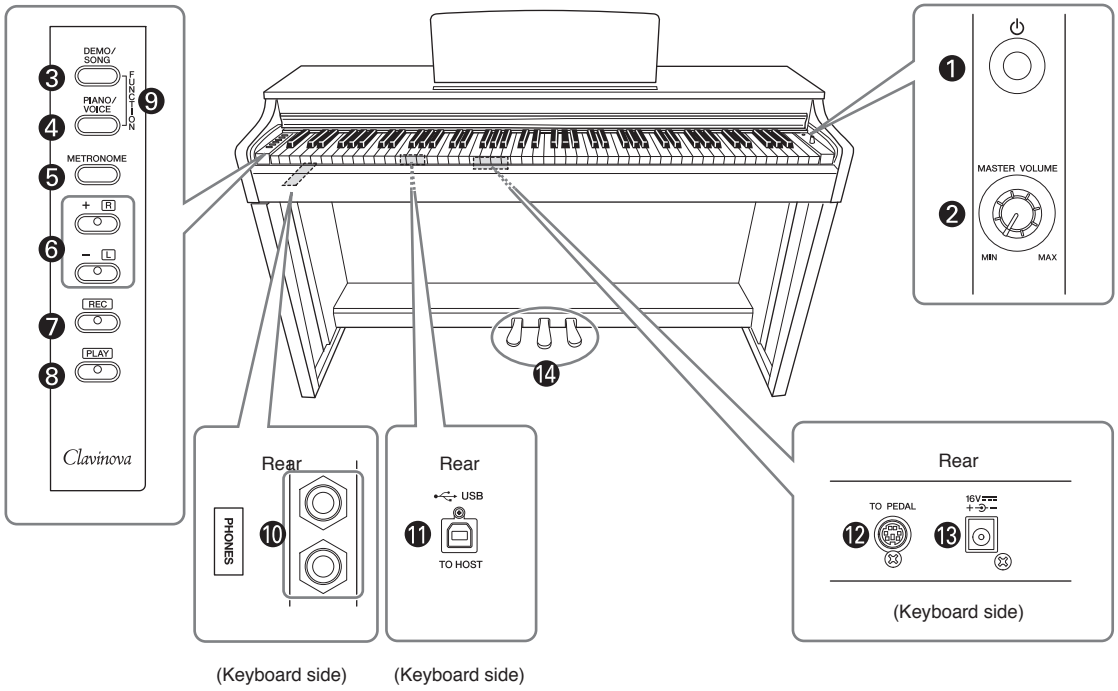

❶ [⏻] (Standby/On) switch
❷ [MASTER VOLUME] knob
❸ [DEMO/SONG] button
❹ [PIANO/VOICE] button
❺ [METRONOME] button
❻ [+R], [–L] buttons
❼ [REC] button
❽ [PLAY] button
❾ [FUNCTION]
❿ [PHONES] jacks
⓫ [USB TO HOST] terminal
⓬ [TO PEDAL] jack
⓭ DC IN jack
⓮ Pedals

■ DISASSEMBLY PROCEDURE

CAUTION:

Be sure to attach the removed filament tape just as it was before removal.

1. Assemblies (Exterior Section) (Time required: About 2 minutes each)

1-1 Each assembly can be removed by removing its fixing screws as listed below.

Assembly	Ref. No.	Screw	QTY	Fig.
HEADPHONE HANGER	M10b	TRUSS HEAD SCREW 4.0X10 MFZN2B3 (WF00080R)	2	1-1
MUSIC REST ASSEMBLY	S11	BIND HEAD TAPPING SCREW-1 3.0X16 MFZN2B3 (WE971200)	4	1
TOP BOARD ASSEMBLY *1	S05	SCREW + WASHER 4.0X16 WASHD8T0.5 (ZE721900)	3	1
MAIN UNIT *2	M6a	BIND HEAD SCREW 6.0X16 MFZN2B3 (WE969400)	6	1
REAR PANEL *3	M6bA	TRUSS HEAD SCREW 4.0X12 MFZN2B3 (WE99770R)	1	1
	M6bB	TRUSS HEAD SCREW 4.0X12 MFZN2B3 (WE99770R)	1	1
	M6d	TRUSS HEAD TAPPING SCREW-1 4.0X20 MFZN2B3 (WE96530R)	4	1
SIDE BOARD ASSEMBLY (L) *4	M6cA	TRUSS HEAD SCREW 6.0X20 MFZN2B3 (WF00130R)	2	1
	M6bA	TRUSS HEAD SCREW 4.0X12 MFZN2B3 (WE99770R)	1	1
SIDE BOARD ASSEMBLY (R) *4	M6cB	TRUSS HEAD SCREW 6.0X20 MFZN2B3 (WF00130R)	2	1
	M6bB	TRUSS HEAD SCREW 4.0X12 MFZN2B3 (WE99770R)	1	1
PEDAL BOX ASSEMBLY *5	M6cA	TRUSS HEAD SCREW 6.0X20 MFZN2B3 (WF00130R)	2	1
	M6cB	TRUSS HEAD SCREW 6.0X20 MFZN2B3 (WF00130R)	2	1
	M6d	TRUSS HEAD TAPPING SCREW-1 4.0X20 MFZN2B3 (WE96530R)	4	1

*1 To remove the top board assembly, be sure to close the key cover first. Slide the top board assembly forward and lift it out.

*2 Spread a soft cloth like a blanket on the floor where the main unit is to be placed in advance.
To remove the main unit, be sure to disconnect the AC cord and the PK cable, and remove the headphone hanger first. (Fig. 1-1, 1-2)
Move the main unit backward, lift it and place it on the cloth gently. For safety, this work should be done by two persons. (Fig. 1-3)

*3 To remove the rear panel, be sure to disconnect the AC cord and the PK cable first. (Fig. 1-2)

*4 To remove the side board assembly (L) or the side board assembly (R), be sure to disconnect the AC cord and the PK cable, and remove the headphone hanger and the main unit first. (Fig. 1-1, 1-2, 1-3)

*5 To remove the pedal box assembly, be sure to disconnect the AC cord and the PK cable, and remove the headphone hanger, the main unit and the rear panel first. (Fig. 1-1, 1-2, 1-3)

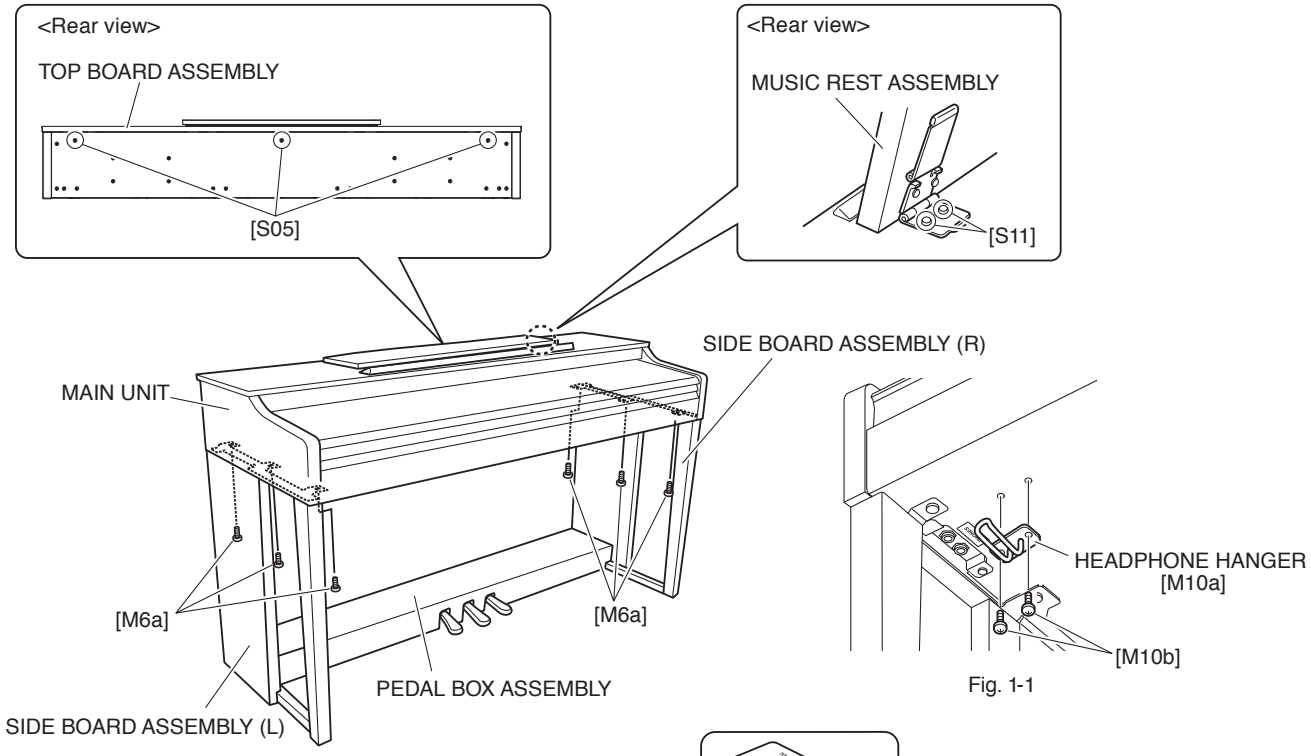

Fig. 1-1

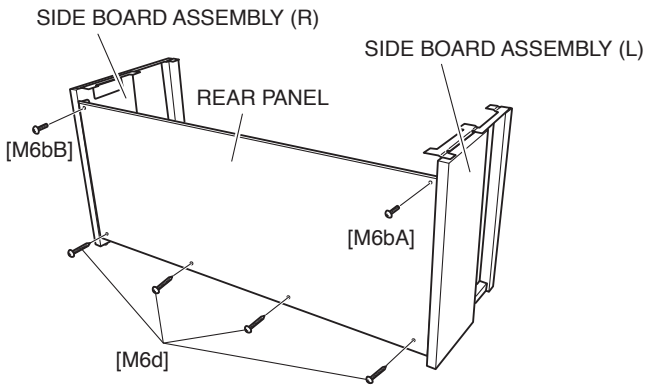

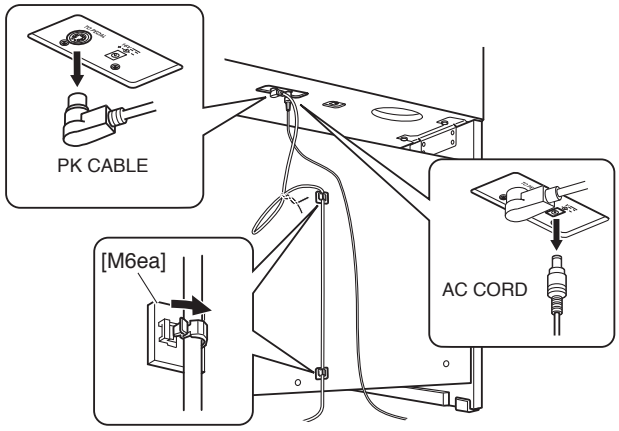

Fig. 1-2

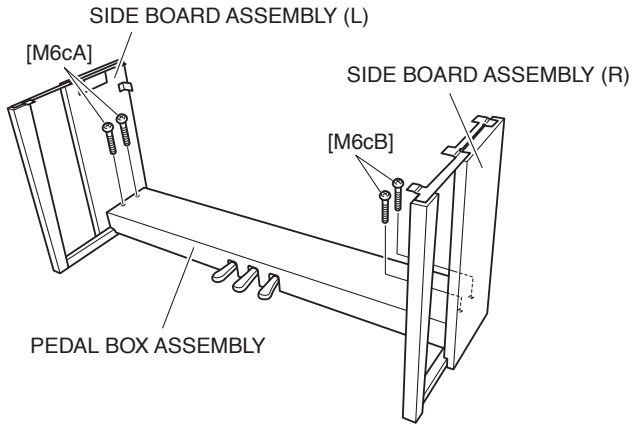

⚠ CAUTION
Do not hold the key cover assembly or top board assembly.
For safety, this work should be done by two persons.

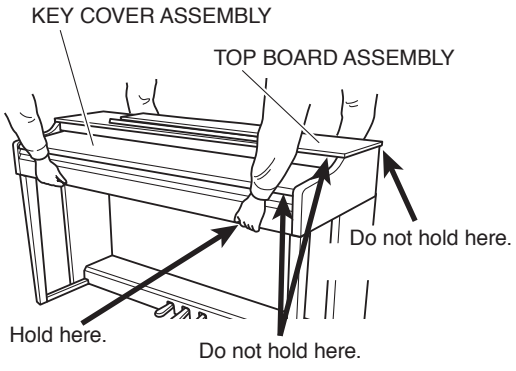

Fig. 1-3

Fig. 1

2. Circuit Boards & Assemblies (Main Unit Section) (Time required: About 3 minutes each)

2-1 Remove the top board assembly. (See procedure 1)

2-2 Each circuit board and assembly can be removed by removing its fixing screws as listed below.

3. DM Circuit Board (Time required: About 2 minutes)

3-1 Remove the top board assembly. (See procedure 1)

3-2 Remove the DM shield assembly. (See procedure 2)

3-3 Remove the four (4) screws marked [S23]. The DM circuit board can then be removed. (Fig. 2)

Circuit board and Assembly	Ref. No.	Screw	QTY	Fig.
DM SHIELD ASSEMBLY	S12A	BIND HEAD TAPPING SCREW-1 3.5X11 MFZN2W3 (WF831100)	4	2
DCPJ ASSEMBLY	S12B	BIND HEAD TAPPING SCREW-1 3.5X11 MFZN2W3 (WF831100)	2	2
USB-H ASSEMBLY	S12C	BIND HEAD TAPPING SCREW-1 3.5X11 MFZN2W3 (WF831100)	2	2
SPEAKER L	S16A	TRUSS HEAD TAPPING SCREW-1 4.0X16 MFZN2W3 (WE96570R)	4	2
SPEAKER R	S16B	TRUSS HEAD TAPPING SCREW-1 4.0X16 MFZN2W3 (WE96570R)	4	2

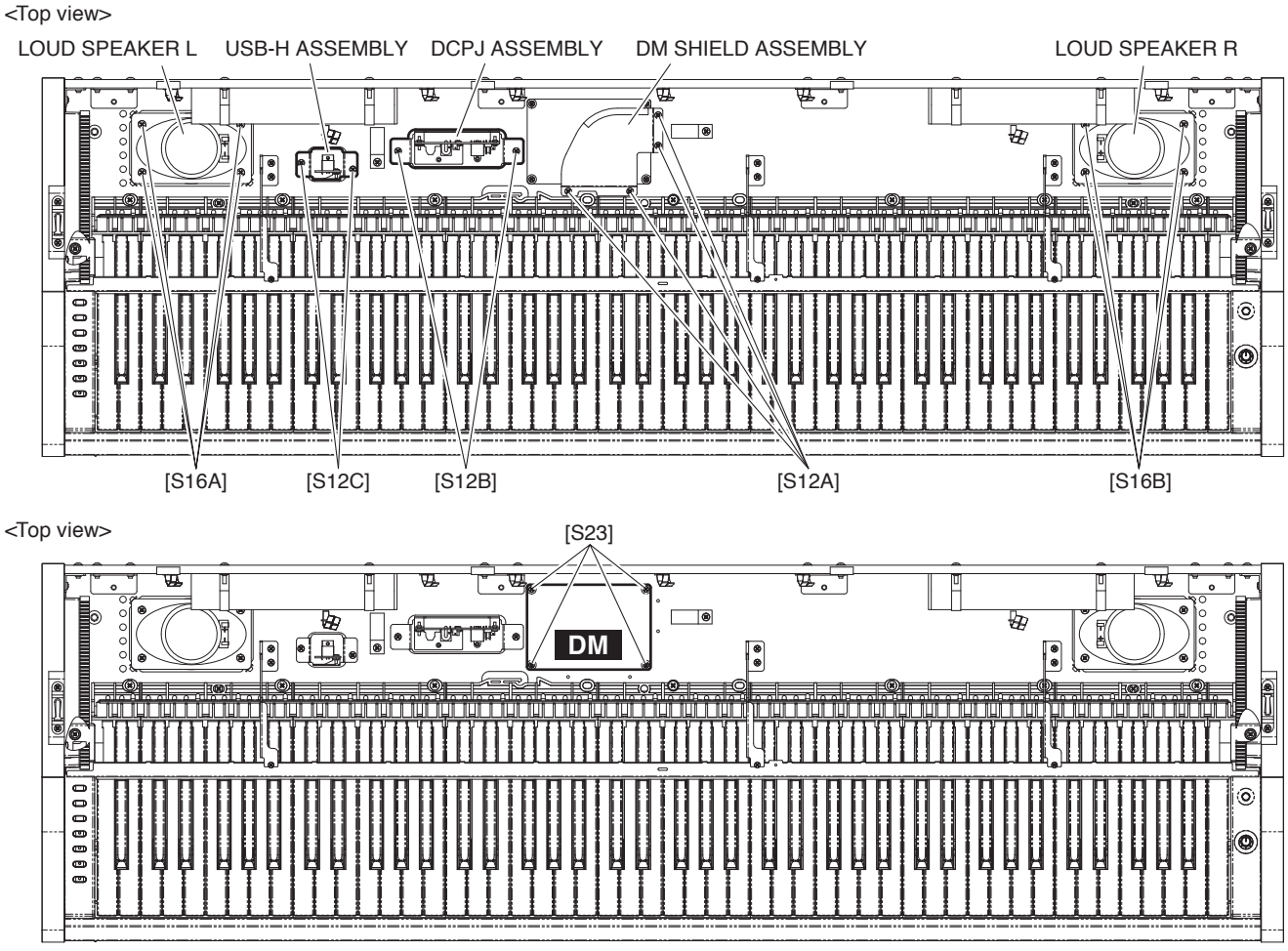

Fig. 2

4. DCPJ Circuit Board (Time required: About 2 minutes)

4-1 Remove the top board assembly. (See procedure 1)

4-2 Remove the DCPJ assembly. (See procedure 2)

4-3 Remove the four (4) screws marked [5A]. The DCPJ circuit board can then be removed from the DCPJ angle. (Fig. 3)

4-4 Remove the two (2) screws marked [5B]. The DC JACK angle can then be removed from the DCPJ circuit board. (Fig. 3)

* ***To assemble the DCPJ assembly, be sure to install the DC JACK angle to the DCPJ circuit board first. Then tighten screws in the order a to c as in Fig. 3 to assemble. (Fig. 3)***

5. USB-H Circuit Board (Time required: About 2 minutes)

5-1 Remove the top board assembly. (See procedure 1)

5-2 Remove the USB-H assembly. (See procedure 2)

5-3 Remove the screw marked [3A] and the screw marked [4]. The USB circuit board can then be removed from the USB-H plate. (Fig. 4)

● DCPJ ASSEMBLY

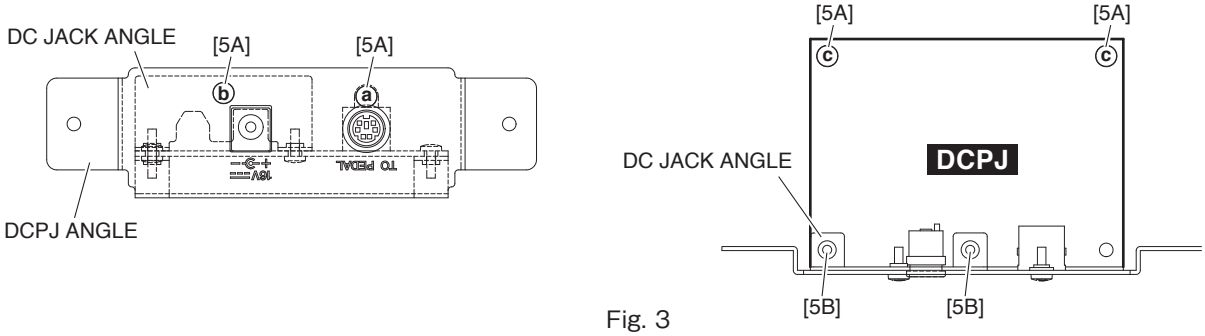

Fig. 3

● USB-H ASSEMBLY

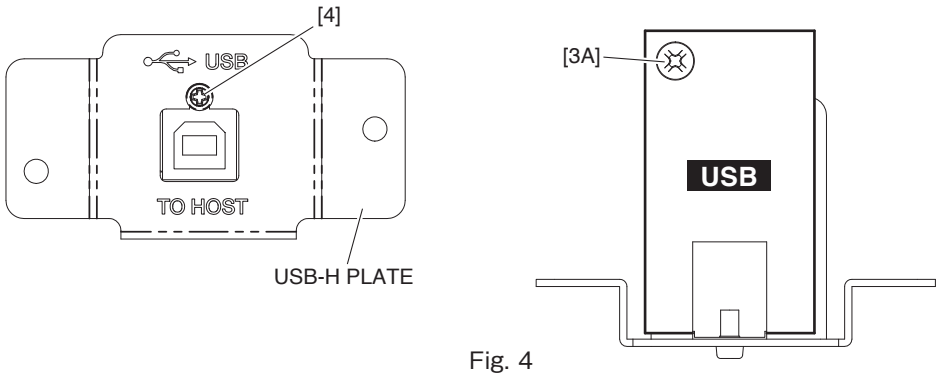

Fig. 4

6. Key Cover Assembly (Time required: About 1 minute)

6-1 Close the key cover.

6-2 Remove the top board assembly. (See procedure 1)

6-3 Lift the rear key cover assembly. (Photo 1)

6-4 Lean slightly the key cover assembly so that the guide pin can be removed from the guide rail. (Photo 2)

* ***When removing, be sure not to nake scratches on the side arm.***

* ***When reinstalling the key cover assembly, apply a masking shield tape around the guide rail to prevent from making scratches on the assembly.***

7. Rack (L, R) (Time required: About 2 minutes each)

7-1 Remove the top board assembly. (See procedure 1)

7-2 Remove the key cover assembly. (See procedure 6)

7-3 Remove the three (3) screws marked [S14]. The rack L can then be removed. (Fig. 5)

* ***The left and right rack can then be removed in the same manner.***

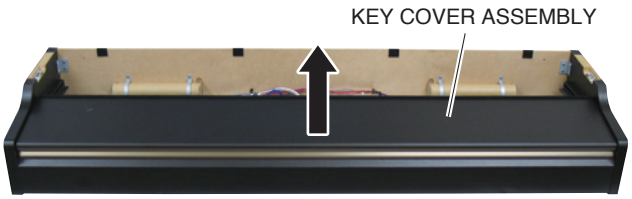

Photo 1



Photo 2

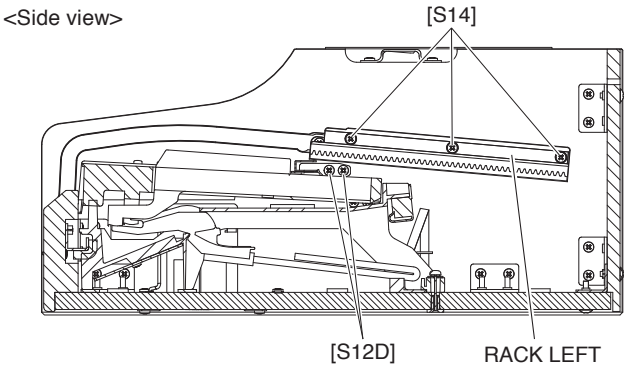

Fig. 5

8. Stopper Rail Assembly (Time required: About 4 minutes)

8-1 Remove the top board assembly. (See procedure 1)
8-2 Remove the key cover assembly. (See procedure 6)
8-3 Remove the rack L and R. (See procedure 7)
8-4 Remove the two (2) screws marked [S12D] each from both sides of the assembly. (Fig. 5)
8-5 Remove the six (6) screws marked [S12E]. The stopper rail assembly can then be removed. (Fig. 6)

9. Key Block Assembly (L, R) (Time required: About 4 minutes each)

9-1 Remove the top board assembly. (See procedure 1)
9-2 Remove the key cover assembly. (See procedure 6)
9-3 Remove the rack L and R. (See procedure 7)
9-4 Remove the stopper rail assembly. (See procedure 8)
9-5 Remove the screw marked [S22]. (Fig. 6)
9-6 Slide the key block assembly L backward and lift it out. (Fig. 6)
* ***The left and right key block assembly can then be removed in the same manner.***

<Top view>

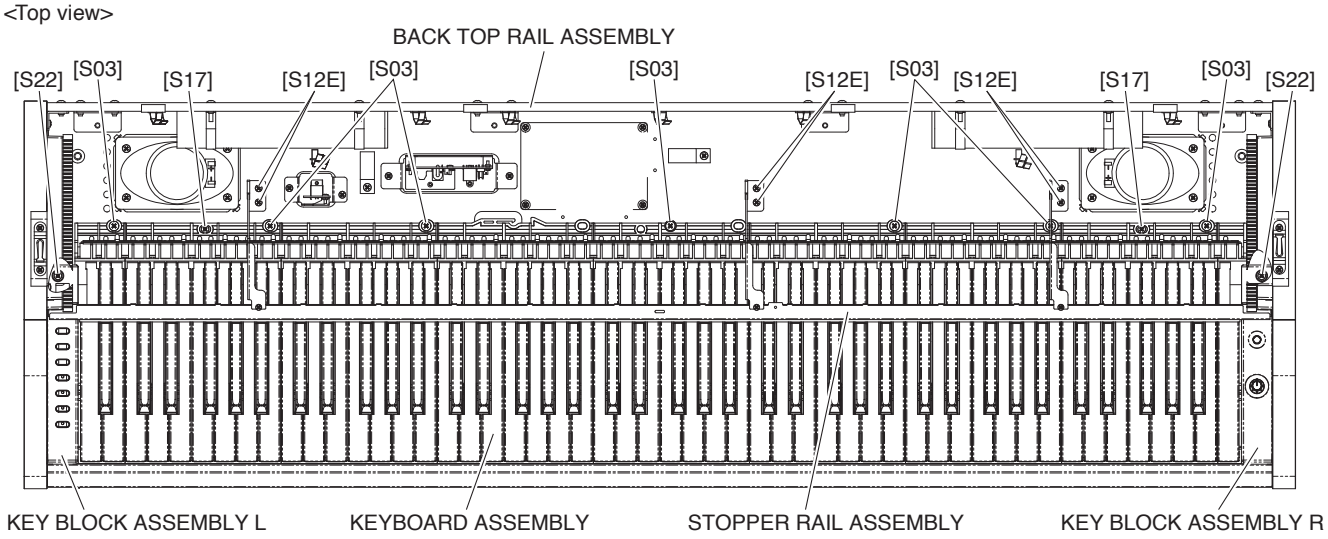

Fig. 6

10. Keyboard Assembly (Time required: About 7 minutes)

10-1 Remove the top board assembly. (See procedure 1)
10-2 Remove the key cover assembly. (See procedure 6)
10-3 Remove the rack L and R. (See procedure 7)
10-4 Remove the stopper rail assembly. (See procedure 8)
10-5 Remove the key block assembly L and R. (See procedure 9)
10-6 Remove the seven (7) screws marked [S03] and the two (2) screws marked [S17]. The keyboard assembly can then be removed. (Fig. 6)

11. PNL Circuit Board (Time required: About 5 minutes)

11-1 Remove the top board assembly. (See procedure 1)
11-2 Remove the key cover assembly. (See procedure 6)
11-3 Remove the rack L and R. (See procedure 7)
11-4 Remove the stopper rail assembly. (See procedure 8)
11-5 Remove the key block assembly L. (See procedure 9)
11-6 Remove the six (6) screws marked [6A]. The PNL circuit board can then be removed. (Fig. 7)

12. PNR Circuit Board (Time required: About 6 minutes)

12-1 Remove the top board assembly. (See procedure 1)
12-2 Remove the key cover assembly. (See procedure 6)
12-3 Remove the rack L and R. (See procedure 7)
12-4 Remove the stopper rail assembly. (See procedure 8)
12-5 Remove the key block assembly R. (See procedure 9)
12-6 Remove the knob GAIN from the key block assembly R. (Fig. 8)
12-7 Remove the five (5) screws marked [6B]. The PNR circuit board can then be removed. (Fig. 8)

13. PL Circuit Board (Time required: About 7 minutes)

13-1 Remove the top board assembly. (See procedure 1)
13-2 Remove the key cover assembly. (See procedure 6)
13-3 Remove the rack L and R. (See procedure 7)
13-4 Remove the stopper rail assembly. (See procedure 8)
13-5 Remove the key block assembly L and R. (See procedure 9)
13-6 Remove the keyboard assembly. (See procedure 10)
13-7 Remove the screw marked [8]. The PL circuit board can then be removed. (Photo 3)

● **KEY BLOCK ASSEMBLY L**

<Bottom view>

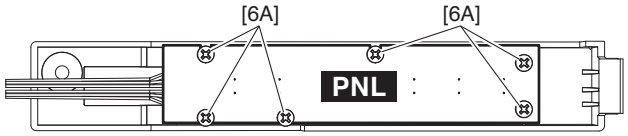

Fig. 7

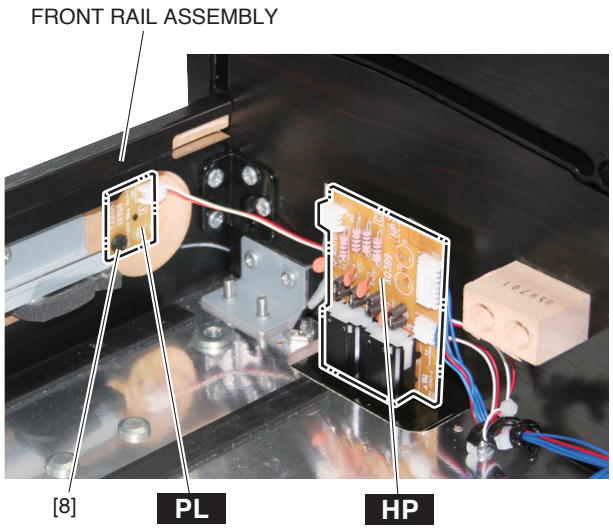

Photo 3

● **KEY BLOCK ASSEMBLY R**

<Side view>

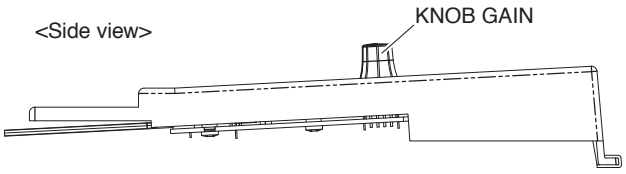

<Bottom view>

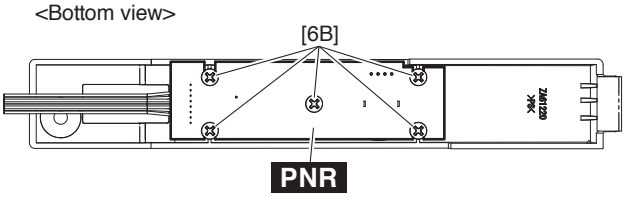

Fig. 8

14. HP JACK Assembly (Time required: About 1 minutes)

14-1 Remove the two (2) screws marked [S12F] from the bottom of the main unit. The HP JACK assembly can then be removed. (Fig. 9)

14-2 Remove the harness connected to the HP circuit board.

* ***When removing the HP jack assembly, be careful not to allow HP circuit board parts to catch and pull the wire PL connected to the arm assembly (L).***

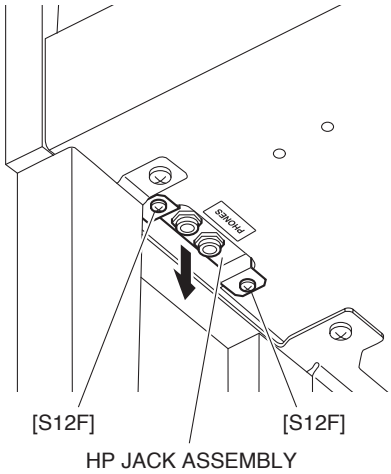

Fig. 9

15. HP Circuit Board (Time required: About 2 minutes)

15-1 Remove the HP JACK assembly. (See procedure 14)

15-2 Remove the two (2) nuts marked [3B]. The HP circuit board can then be removed from the H. P plate. (Fig. 10)

● **HP JACK ASSEMBLY**

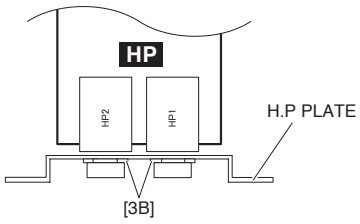

Fig. 10

16. Back Top Rail Assembly (Time required: About 2 minutes)

16-1 Remove the top board assembly. (See procedure 1)

16-2 Remove the four (4) screws marked [S01] and four (4) screws marked [S02A]. The back top rail assembly can then be removed. (Fig. 12)

17. Front Rail Assembly (Time required: About 9 minutes)

17-1 Remove the top board assembly. (See procedure 1)

17-2 Remove the key cover assembly. (See procedure 6)

17-3 Remove the rack L and R. (See procedure 7)

17-4 Remove the stopper rail assembly. (See procedure 8)

17-5 Remove the key block assembly L and R. (See procedure 9)

17-6 Remove the keyboard assembly. (See procedure 10)

17-7 Remove the two (2) screws marked [S13] each from both sides of the assembly. (Fig. 11)

17-8 Remove the nine (9) screws marked [S15]. The front rail assembly can then be removed. (Fig. 12)

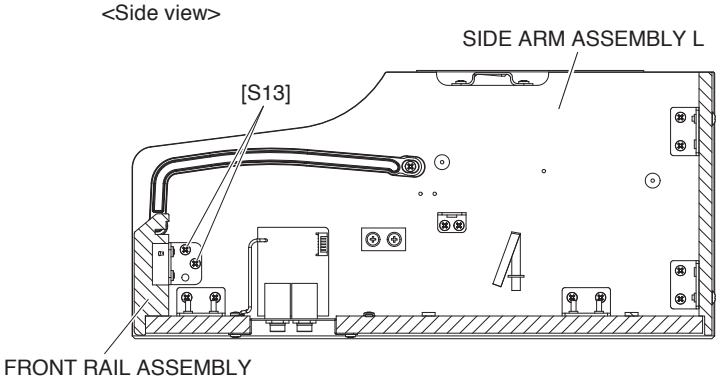

Fig. 11

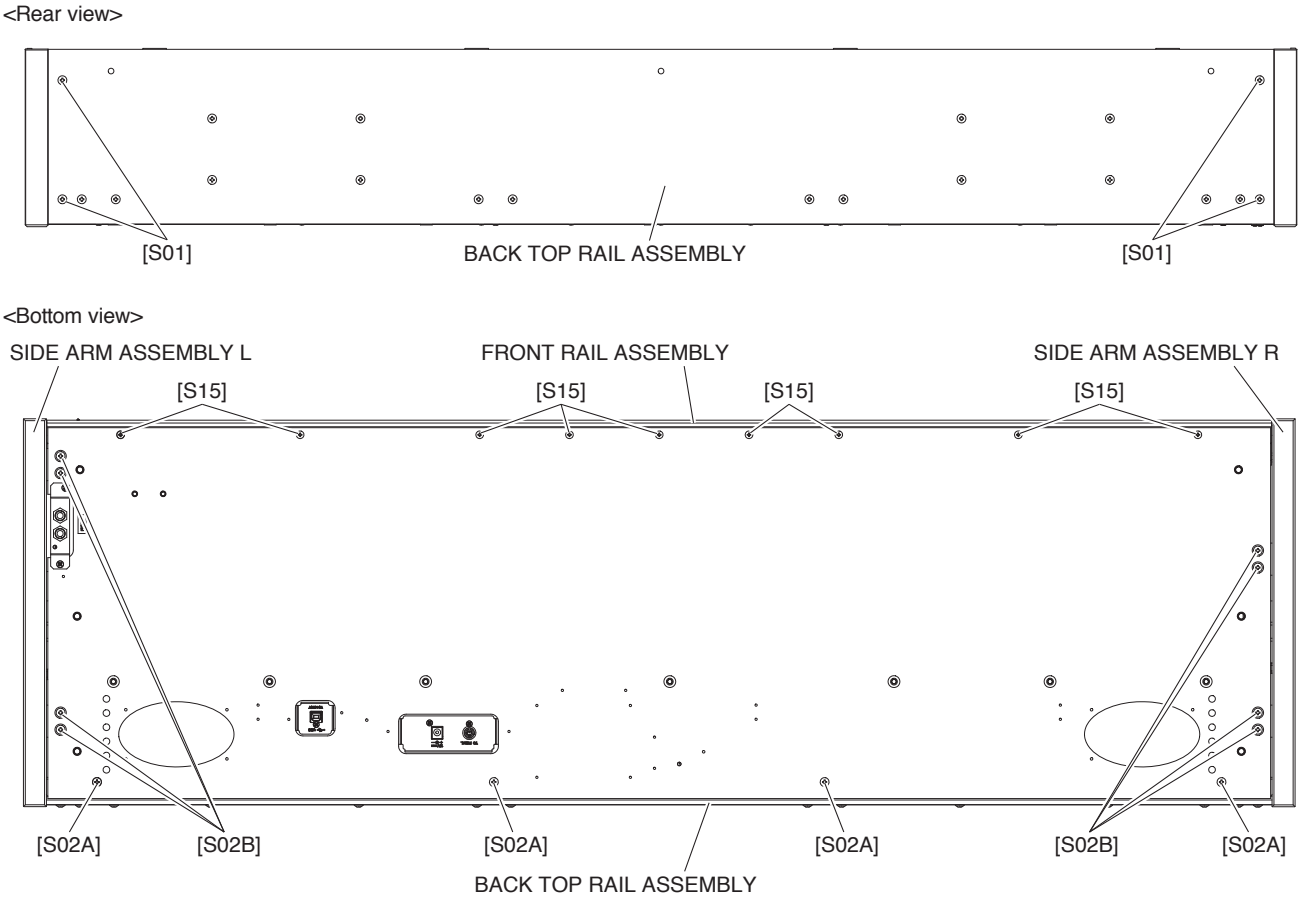

Fig. 12

18. Side Arm Assembly (L, R) (Time required: About 8 minutes each)

18-1 Remove the top board assembly. (See procedure 1)
18-2 Remove the key cover assembly. (See procedure 6)
18-3 Remove the rack L and R. (See procedure 7)
18-4 Remove the stopper rail assembly. (See procedure 8)
18-5 Remove the key block assembly L and R. (See procedure 9)
18-6 Remove the keyboard assembly. (See procedure 10)
18-7 Remove the main unit. (See procedure 1) (Parts removed in Steps 18-1 through 18-6 are component parts of the main unit.)
18-8 Remove the two (2) screws marked [S13]. (Fig. 11)
18-9 Remove the two (2) screws marked [S01] and the four (4) screws marked [S02B]. The side arm assembly L can then be removed. (Fig. 12)

Note: ***The side arm assembly R can then be removed in the same manner.***

19. Pedal Assembly (Time required: About 2 minutes)

19-1 Disconnect the PK cable. (See procedure 1)
19-2 Remove the pedal box assembly. (See procedure 1)
19-3 Remove the eight (8) screws marked [4] and the screw marked [5]. The pedal assembly can then be removed. (Fig. 13)

● PEDAL BOX ASSEMBLY

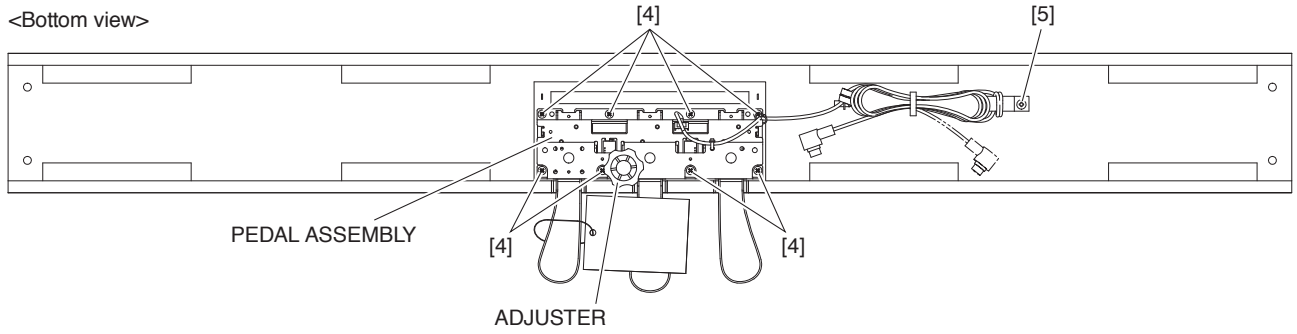

Fig.13

20. PEDAL Circuit Board (Time required : About 7 minutes)

20-1 Disconnect the PK cable. (See procedure 1)

20-2 Remove the pedal assembly. (See procedure 19)

20-3 Remove the adjuster. (Fig. 13)

20-4 Remove the three (3) screws marked [80A]. The three (3) pedal guides can then be removed as shown in Fig. 15. (Fig. 14, 15)

20-5 Remove the three (3) screws marked [80B]. (Fig. 14) Push down the pedal (damper) and then draw it forward. The sostenuto and soft pedals can then be removed in the same manner. (Fig. 14, 15)

20-6 Remove the two (2) rubber contacts (SOFT, SOSTENUTO) attached to the PEDAL circuit board. (Fig. 16)

20-7 Straighten the four (4) bent frame portions marked [A]. The PEDAL circuit board can then be removed. (Fig. 16)

20-8 Pull out the actuator pedal from the PEDAL circuit board. (Fig. 16)

* ***The actuator pedal is not part of the PEDAL circuit board. Install it to the new circuit board when replacing the PEDAL circuit board.***

●PEDAL ASSEMBLY

<Top view>

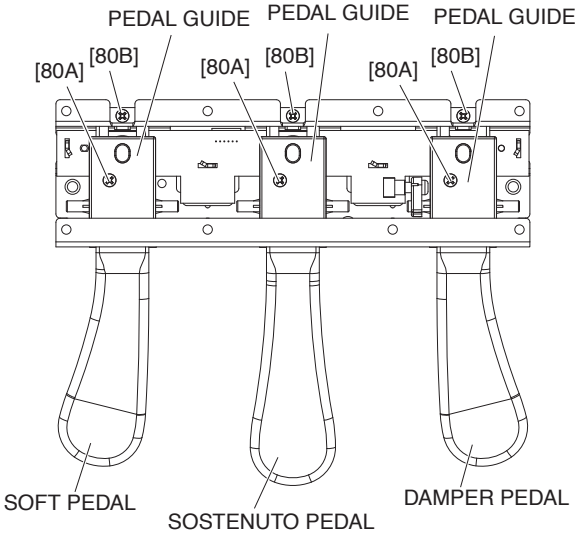

Fig. 14

<Top view>

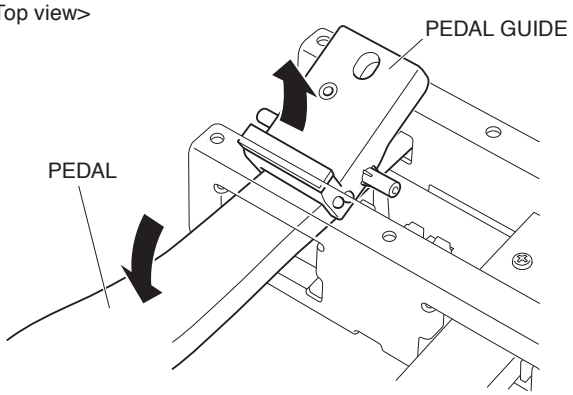

Fig. 15

<Top view>

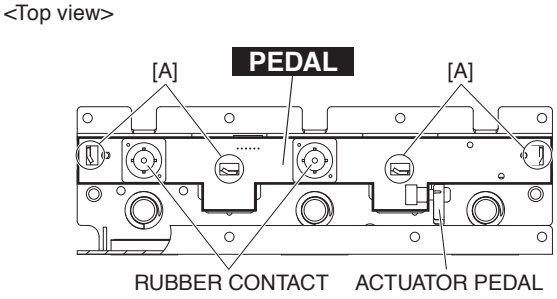

Fig. 16

21. Disassembling the GH3 GKS Keyboard (Time required: About 20 minutes)

* ***After inserting a round stick (Rod:TX000671) between the frame and the keys, remove the circuit boards. (Fig. 17)***

* ***Keys and Hammer can be removed without removing the circuit boards. For the removing the keys and hammer, refer to 16-17 page.***

21-1 MK-L Circuit Board

Remove the five (5) screws marked [260A] and the screw marked [262A]. The MK-L circuit board can then be removed. (Fig. 18)

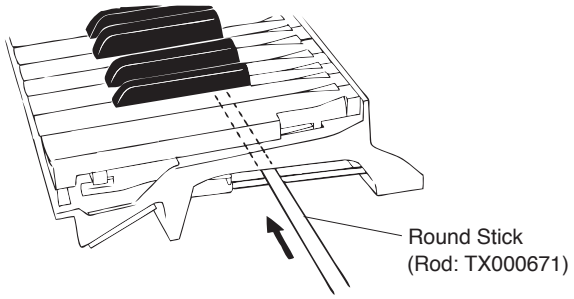

Fig. 17

21-2 MK-M Circuit Board

Remove the four (4) screws marked [260B], the screw marked [262A] and the screw marked [262B]. The MK-M circuit board can then be removed. (Fig. 18)

21-3 MK-H Circuit Board

Remove the five (5) screws marked [260C] and the screw marked [262B]. The MK-H circuit board can then be removed. (Fig. 18)

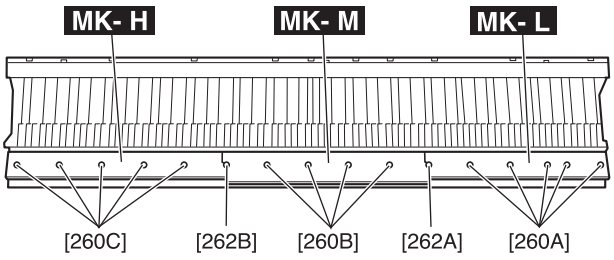

Fig. 18

21-4 Rubber Contact

Remove the MK circuit board for the involved key. The rubber contacts can then be removed. (Photo 4, Photo 5)



Photo 4

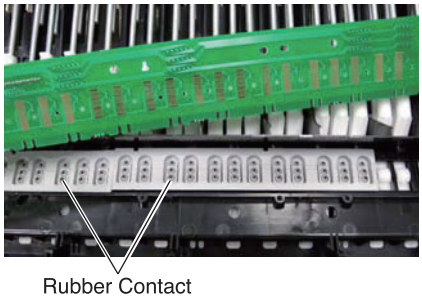

Photo 5

21-5 White Key

In order to release the white key from the stopper, insert a thin plate between the white keys (gap in the direction indicated by the triangle mark, near the fulcrum of the key). Press down the stopper marked [C] and move the white key forward. Then the white key being released from the stopper lifts up. (Fig. 19, Fig. 20)

* ***Use special care not to move the white key forward so much as to cause damage to the key spring.***

21-6 In this state, move the white key rearward a little. Then the white key can be removed. (Fig. 20)

21-7 Black Key

The black key can be removed after the white keys on either side have been removed.

21-8 Hammer, White Key (Hammer, Black Key)

After a key has been removed, push a key spring down once to take it out of the hook. (Fig. 21)

Place the keyboard assembly upside-down and peel the stopper (L88_W) away. Then hammer of the white key can then be removed. (Fig. 22)

* ***The hammer of the black key can then be removed in the same manner.***

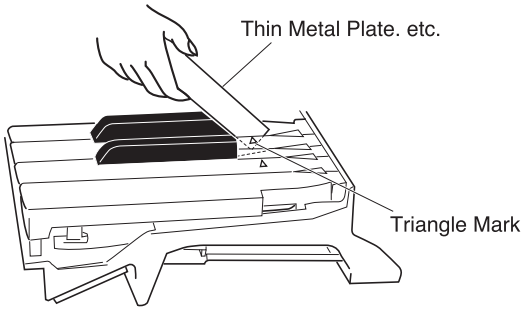

Fig. 19

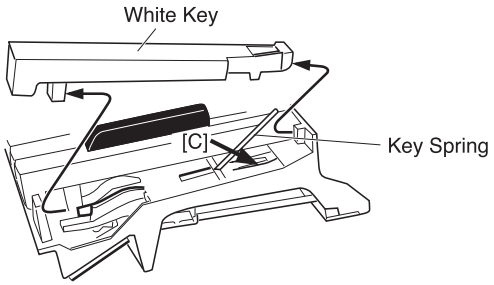

Fig. 20

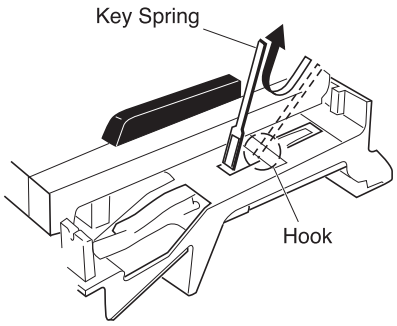

Fig. 21

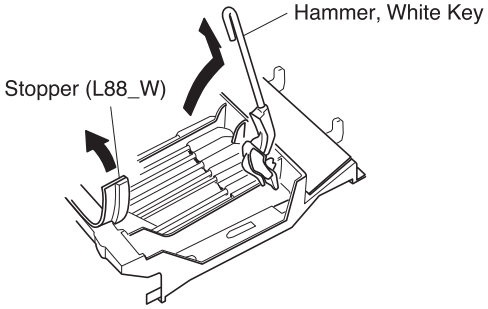

Fig. 22

22. Assembling the GH3 GKS Keyboard

22-1 Hammer, White Key (Hammer, Black Key)

Place the keyboard assembly upside-down, insert a hammer assembly into the frame, and put the stopper (L88_W) on. (Fig. 23)

* ***There are four (4) kinds of hammers that differ in weight, in each white key and black key. When assembling, be careful of it.***

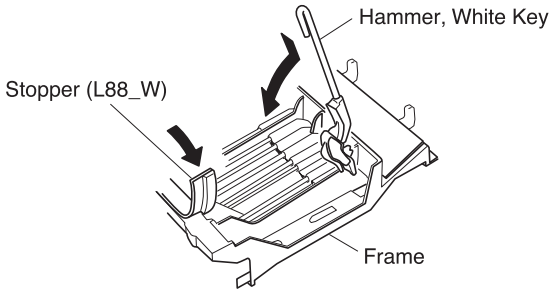

Fig. 23

22-2 Key Spring

Place the keyboard assembly right side up. Fix key springs on the frame by setting one at each slit and pushing down once on each key spring. (Fig. 24)

* ***Be careful of the direction of the spring. It should be installed with its projecting end facing upward. (Fig. 25)***

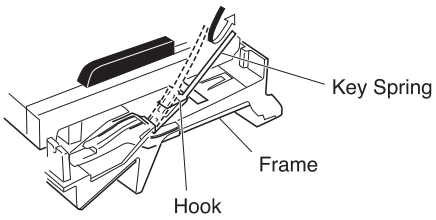

Fig. 24

22-3 White (Black) Key

After a key has been fit to part [E] and key guide, make sure that the spring is fixed to the key and then press down part [D] of the key. (Fig. 26)

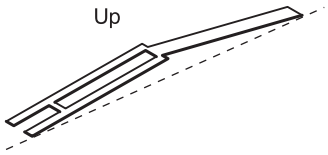

Fig. 25

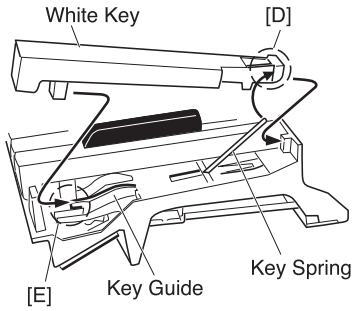

Fig. 26

22-4 MK-L Circuit Board

Tighten the five (5) screws marked [260A] and the screw marked [262A] to fix the MK-L circuit board. (Fig. 18)

* ***Insert the MK-L circuit board under the hooks "A". (Photo 6)***
* ***Make sure that a pin has been correctly inserted into the hole of the triangle mark on the circuit board. (Photo 6)***

22-5 MK-M Circuit Board

Tighten the four (4) screws marked [260B], the screw marked [262A] and the screw marked [262B] to fix the MK-M circuit board. (Fig. 18)

* ***Insert the MK-M circuit board under the hooks "A". (Photo 6)***
* ***Make sure that a pin has been correctly inserted into the hole of the triangle mark on the circuit board. (Photo 6)***
* ***When installing the circuit boards, set it under the hooks "B" to align the triangle marks of the circuit board and projection parts of the frame as shown in photo 7. (Photo 7)***

22-6 MK-H Circuit Board

Tighten the five (5) screws marked [260C] and the screw marked [262B] to fix the MK-H circuit board. (Fig.18)

* ***Insert the MK-H circuit board under the hooks "A". (Photo 6)***
* ***Make sure that a pin has been correctly inserted into the hole of the triangle mark on the circuit board. (Photo 6)***

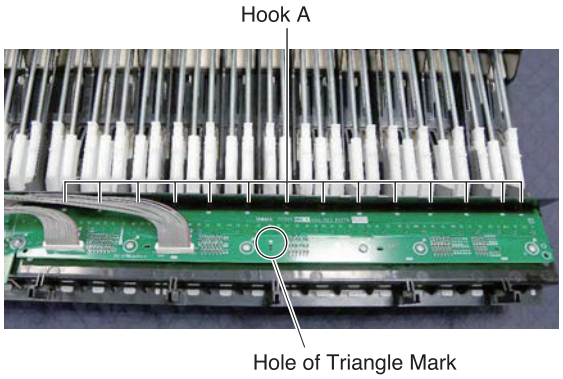

Photo 6

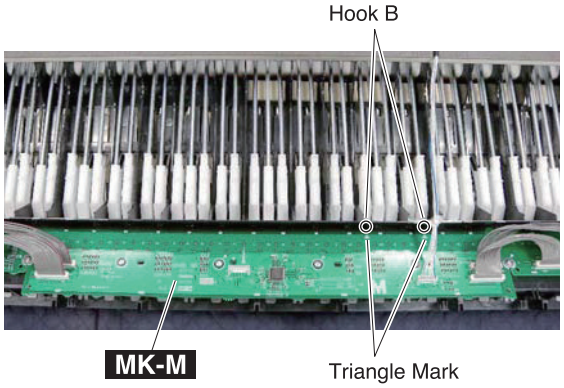

Photo 7

■ LSI PIN DESCRIPTION

- **R8A02042BG** (YC479A00) **SWX08** 20
- **TMP89FM42AUG** (YC778C00) **E-GKS** 19
- **YDA164C-QZE2** (YD652A00) **AMP** (POWER AMPLIFIER 20Wx2) 19

●**TMP89FM42AUG** (YC778C00) **E-GKS**

MK-M: IC1

PIN NO.	NAME	I/O	FUNCTION	PIN NO.	NAME	I/O	FUNCTION
1	VSS	-	Ground	23	P42	I/O	Port 42
2	XIN	I	High frequency departure pendulum connection terminal	24	P43	I/O	Port 43
3	XOUT	O	High frequency departure pendulum connection terminal	25	P44	I/O	Port 44
4	MODE	I	Terminal for shipment examination. Please fix at "L" level.	26	P45	I/O	Port 45
5	VDD	-	Power supply +5D	27	P46	I/O	Port 46
6	P02	I/O	Port 02	28	P47	I/O	Port 47
7	P03	I/O	Port 03	29	P74	I/O	Port 74
8	/RESET	I	System reset input	30	P75	I/O	Port 75
9	P11	I/O	Port 11	31	P76	I/O	Port 76
10	P12	I/O	Port 12	32	P77	I/O	Port 77
11	P13	I/O	Port 13	33	P90	I/O	Port 90
12	P20	I/O	Port 20	34	P91	I/O	Port 91
13	P21	I/O	Port 21	35	P80	I/O	Port 80
14	P22	I/O	Port 22/Serial clock I/O 0	36	P81	I/O	Port 81
15	SDA0	I/O	Serial bus data input/output	37	P70	I/O	Port 70
16	SCL0	I/O	Serial bus data input/output	38	P71	I/O	Port 71
17	P25	I/O	Port 25	39	P72	I/O	Port 72
18	P26	I/O	Port 16	40	P73	I/O	Port 73
19	P27	I/O	Port 27	41	PB4	I/O	Port B4
20	VAREF/AVDD		Analog, standard voltage input terminal for analog to digital translation/Power supply terminal for analogue	42	PB5	I/O	Port B5
				43	PB6	I/O	Port B6
21	AIN0	I	A/D converter analog input	44	PB7	I/O	Port B7
22	P41	I/O	Port 41				

●**YDA164C-QZE2** (YD652A00) **AMP** (POWER AMPLIFIER 20Wx2)

DM: IC103

PIN NO.	NAME	I/O	FUNCTION	PIN NO.	NAME	I/O	FUNCTION
1	AVSS	GND	Analog GND	17	HOPP	I	PWM Carrier Frequency Hopping setting pin
2	VREF	AO	Analog Reference Voltage Output	18	PLIMIT	I	Power Limit setting pin
3	REFA	AO	Internal Regulator Output	19	SLEEPN	I	Sleep Reset pin
4	DVDD	DVDD power	Digital Power	20	PROTN	O/D	Error Flag Output pin
5	MCK	I	Master Clock Input Pin	21	MUTEN	I	Mute pin
6	SDATA	I	Audio Data Input Pin	22	CKMOD	I	Clock Mode setting pin
7	SCLK	I	Bit Clock Input Pin	23	GAIN0	I	Gain setting pin 0
8	LRCLK	I	Word Clock Input Pin	24	GAIN1	I	Gain setting pin 1
9	DVSS	GND	Digital GND	25	MONO	I	Stereo/Mono setting pin
10	PVSSR	GND	GND for the digital amplifier output (Rch)	26	PVSSL	GND	GND for the digital amplifier output (Lch)
11	PVDDPR	PVDD power	Power for the digital amplifier output (Rch+)	27	PVDDML	PVDD power	Power for the digital amplifier output (Lch-)
12	OUTPR	O	Digital Amplifier Output (Rch+)	28	OUTML	O	Digital Amplifier Output (Lch-)
13	PVSSR	GND	GND for the digital amplifier output (Rch)	29	PVSSL	GND	GND for the digital amplifier output (Lch)
14	OUTMR	O	Digital Amplifier Output (Rch-)	30	OUTPL	O	Digital Amplifier Output (Lch+)
15	PVDDMR	PVDD power	Power for the digital amplifier output (Rch-)	31	PVDDPL	PVDD power	Power for the digital amplifier output (Lch+)
16	PVSSR	GND	GND for the digital amplifier output (Rch)	32	PVSSL	GND	GND for the digital amplifier output (Lch)

● R8A02042BG (YC479A00) SWX08

DM: IC101

PIN NO.	NAME	I/O	FUNCTION	PIN NO.	NAME	I/O	FUNCTION
A1	VSS	-	Ground (for I/O and for core)	E7	VSS	-	Ground (for I/O and for core)
A2	VSSADC	-	ADC analog ground	E8	VCCQ	-	The power supply +3.3V
A3	VCCADC	-	ADC analog power supply (Typ +3.3V)	E9	VSS	-	Ground (for I/O and for core)
A4	AN4	I(a)	ADC analog input 4	E10	VCCQ	-	The power supply +3.3V
A5	VREFADC	-	Analog module reference voltage. (Typ +3.3V)	E11	VCCQ	-	The power supply +3.3V
A6	SCK1	Ish/O	External synchronous clock I/O 1	E12	VCCQ	-	The power supply +3.3V
A7	UCLK	I	USB external clock input (48MHz)	E13	VCCQ	-	The power supply +3.3V
A8	VSS	-	Ground (for I/O and for core)	E14	VSS	-	The power supply for internal cores(0V)
A9	FUNC_DM	I/O(a)	USB function data -	E15	VDD	-	The power supply +1.2V
A10	VSS	-	Ground (for I/O and for core)	E16	VDD	-	The power supply +1.2V
A11	HOST_DM	I/O(a)	USB host data - (After hard reset is released, it becomes Low output status.)	E17	VCCQ	-	The power supply +3.3V
A12	UCTL	I	USB output control (Make it to High when USB unused).	E18	VCCQ	-	The power supply +3.3V
A13	XTAL	O	Crystal oscillator output	E19	WE3N/DQMUU/PH1	O	D31-D24 at byte writing of D31-D24 (active Low)/SDRAM is selected/port H 1
A14	EXTAL	I	Crystal oscillator input (16.9344MHz)	E20	A2	O	SH2A-CPU address bus 2
A15	VSS	-	Ground (for I/O and for core)	E21	D30/PF6	I/O	SH2A-CPU data bus 30/port PF 6
A16	CS4N/PH4	O	SH2A-CPU chip selection 4 (Low active)/port PH 4	E22	D29/PF5	I/O	SH2A-CPU data bus 29/port PF 5
A17	TRSTN	Ish	JTAG test reset input (Low active)	F1	MD5	I/O	Wave ROM, SDRAM data bus 5
A18	TDO	O	JTAG test data output	F2	MD4	I/O	Wave ROM, SDRAM data bus 4
A19	PA2	I/O	Parallel port A 2	F3	MD12	I/O	Wave ROM, SDRAM data bus 12
A20	PA0	I/O	Parallel port A 0	F4	MD11	I/O	Wave ROM, SDRAM data bus 11
A21	IRQ1	Ish	Interrupt input 1	F5	VDD	-	The power supply +1.2V
A22	VCCQ	-	The power supply +3.3V	F18	VDD	-	The power supply +1.2V
B1	MA1	O	Wave ROM, SDRAM address bus 1	F19	A3	O	SH2A-CPU address bus 3
B2	VSS	-	Ground (for I/O and for core)	F20	A4	O	SH2A-CPU address bus 4
B3	AN5	I(a)	ADC analog input 5	F21	D28/PF4	I/O	SH2A-CPU data bus 28/port PF 4
B4	AN2	I(a)	ADC analog input 2	F22	D27/PF3	I/O	SH2A-CPU data bus 27/port PF 3
B5	AN0	I(a)	ADC analog input 0	G1	MD7	I/O	Wave ROM, SDRAM data bus 7
B6	TxD1	O	Serial output 1	G2	MD6	I/O	Wave ROM, SDRAM data bus 6
B7	TxD0	O	Serial output 0	G3	MD14	I/O	Wave ROM, SDRAM data bus 14
B8	VSS	-	Ground (for I/O and for core)	G4	MD13	I/O	Wave ROM, SDRAM data bus 13
B9	FUNC_DP	I/O(a)	USB function data +	G5	VSS	-	Ground (for I/O and for core)
B10	VSS	-	Ground (for I/O and for core)	G18	VSS	-	Ground (for I/O and for core)
B11	HOST_DP	I/O(a)	USB host data + (After hard reset is released, it becomes Low output status.)	G19	A5	O	SH2A-CPU address bus 5
B12	SCL	Ish/OD	E bus (I2C) clock I/O (5V tolerant)	G20	A6	O	SH2A-CPU address bus 6
B13	CS0N	O	SH2A-CPU chip selection 0 (Low active)	G21	D26/PF2	I/O	SH2A-CPU data bus 26/port PF 2
B14	CS3N	O	SH2A-CPU chip selection 3 (Low active)	G22	D25/PF1	I/O	SH2A-CPU data bus 25/port PF 1
B15	CS6N/PH5	O	SH2A-CPU chip selection 6 (Low active)/port PH 5	H1	MA25/SCASN	O	Wave ROM, SDRAM address bus 25/CAS output for wave SDRAM (Low active)
B16	ASEBRKAKN	Ish/O	Emulator break (Low active)	H2	MA26/SCKE	O	Wave ROM, SDRAM address bus 26/Wave SDRAM clock is enable
B17	TMS	I	JTAG test mode selection input	H3	MA17/NFD1	O/, I/O	Wave ROM, SDRAM address bus 17/Wave NAND flash data bus 1
B18	PA5	I/O	Parallel port A 5	H4	MD15	I/O	Wave ROM, SDRAM data bus 15
B19	PA1	I/O	Parallel port A 1	H5	VCCQ	-	The power supply +3.3V
B20	IRQ0	Ish	Interrupt input 0	H18	VCCQ	-	The power supply +3.3V
B21	VCCQ	-	The power supply +3.3V	H19	A7	O	SH2A-CPU address bus 7
B22	VDDPLL2	-	PLL1 analog power supply (Typ. +1.2V)	H20	A8	O	SH2A-CPU address bus 8
C1	MRDN/SDQM	O	Wave ROM enable read (Low active)/Waves SDRAM data is enable	H21	D24/PF0	I/O	SH2A-CPU data bus 24/port PF 0
C2	MCS0N	O	Wave ROM, SDRAM chip selection 0 (Low active)	H22	D23/PE7	I/O	SH2A-CPU data bus 23/port PE 7
C3	VSS	-	Ground (for I/O and for core)	J1	MA15	O	Wave ROM, SDRAM address bus 15(SDRAM bank selection 1)
C4	AN3	I(a)	ADC analog input 3	J2	MA16/NFD0	O/, I/O	Wave ROM, SDRAM address bus 16/Wave NAND flash data bus 0
C5	AN1	I(a)	ADC analog input 1	J3	MA23/NFD7	O/, I/O	Wave ROM, SDRAM address bus 23/Wave NAND flash data bus 7
C6	RxD1	Ish	Serial input 1	J4	MA24/SRASN	O	Wave ROM, SDRAM address bus 24/RAS output for wave SDRAM (Low active)
C7	RxD0	Ish	Serial input 0	J5	VSS	-	Ground (for I/O and for core)
C8	VSS	-	Ground (for I/O and for core)	J9	VSS	-	Ground (for I/O and for core)
C9	VBUS	I	USB cable connection monitor (5V tolerant)	J10	VSS	-	Ground (for I/O and for core)
C10	VSS	-	Ground (for I/O and for core)	J11	VSS	-	Ground (for I/O and for core)
C11	OVER_CURRENT_N	I	USB overcurrent detection (Low active) (5V tolerant)	J12	VSS	-	Ground (for I/O and for core)
C12	EICN	I	E bus reset output (Low active) (5V tolerant)	J13	VSS	-	Ground (for I/O and for core)
C13	CS1N/PH2	O	SH2A-CPU chip selection 1 (Low active)/port PH 2	J14	VSS	-	Ground (for I/O and for core)
C14	CS5N	O	SH2A-CPU chip selection 5 (Low active)	J18	VSS	-	Ground (for I/O and for core)
C15	ASEMDN	Ish	Debug mode setting (Low active)	J19	A9	O	SH2A-CPU address bus 9
C16	TDI	I	JTAG test data input	J20	A10	O	SH2A-CPU address bus 10
C17	PA7	I/O	Parallel port A 7	J21	D22/PE6	I/O	SH2A-CPU data bus 22/port PE 6
C18	PA4	I/O	Parallel port A 4	J22	D21/PE5	I/O	SH2A-CPU data bus 21/port PE 5
C19	WAITN	I	External wait input (Low active)	K1	MA11	O	Wave ROM, SDRAM address bus 11
C20	VCCQ	-	The power supply +3.3V	K2	MA12	O	Wave ROM, SDRAM address bus 12
C21	VSSPLL2	-	The power supply for SH2A PLL analog modules(0V)	K3	MA13	O	Wave ROM, SDRAM address bus 13(When 256Mbit SDRAM is connected, use it.)
C22	VDDPLL1	-	The Jlower supply for SH2A PLL. analog modules(1.2V)	K4	MA14	O	Wave ROM, SDRAM address bus 14(SDRAM bank selection 0)
D1	MD1	I/O	Wave ROM, SDRAM data bus 1	K5	VDD	-	The power supply +1.2V
D2	MD0	I/O	Wave ROM , SDRAM data bus 0	K9	VSS	-	Ground (for I/O and for core)
D3	MD8	I/O	Wave ROM, SDRAM data bus 8	K10	VSS	-	Ground (for I/O and for core)
D4	VSS	-	Ground (for I/O and for core)	K11	VSS	-	Ground (for I/O and for core)
D5	VDD	-	The power supply +1.2V	K12	VSS	-	Ground (for I/O and for core)
D6	VSS	-	Ground (for I/O and for core)	K13	VSS	-	Ground (for I/O and for core)
D7	RESN	Ish	Hardware reset (Low active)	K14	VSS	-	Ground (for I/O and for core)
D8	VCCQ	-	The power supply +3.3V	K18	VDD	-	The power supply +1.2V
D9	PULLUP_ENB	O	The USB pull-up is enable.	K19	A11	O	SH2A-CPU address bus 11
D10	VCCQ	-	The power supply +3.3V	K20	A12	O	SH2A-CPU address bus 12
D11	POWER_ENB	O	The USB voltage is enable.	K21	D20/PE4	I/O	SH2A-CPU data bus 20/port PE 4
D12	SDA	Ish/OD	E bus (I2C) data I/O (5V tolerant)	K22	D19/PE3	I/O	SH2A-CPU data bus 19/port PE 3
D13	CS2N/PH3	O	SH2A-CPU chip selection 2 (Low active)/port PH 3	L1	MA22/NFD6	O/, I/O	Wave ROM, SDRAM address bus 22/Wave NAND flash data bus 6
D14	CS7N	O	SH2A-CPU chip selection 7 (Low active)	L2	MA21/NFD5	O/, I/O	Wave ROM, SDRAM address bus 21/Wave NAND flash data bus 5
D15	TESTN	Ish	Test input (Low active)	L3	MA20/NFD4	O/, I/O	Wave ROM, SDRAM address bus 20/Wave NAND flash data bus 4
D16	TCK	I	JTAG test clock input	L4	MA9	O	Wave ROM, SDRAM address bus 9
D17	PA6	I/O	Parallel port A 6	L5	MA10	O	Wave ROM, SDRAM address bus 10
D18	PA3	I/O	Parallel port A 3	L9	VSS	-	Ground (for I/O and for core)
D19	VCCQ	-	The power supply +3.3V	L10	VSS	-	Ground (for I/O and for core)
D20	A0	O	SH2A-CPU address bus 0	L11	VSS	-	Ground (for I/O and for core)
D21	VSSPLL1	-	PLL analog ground (0V)	L12	VSS	-	Ground (for I/O and for core)
D22	D31/PF7	I/O	SH2A-CPU data bus 31/port PF 7	L13	VSS	-	Ground (for I/O and for core)
E1	MD3	I/O	Wave ROM, SDRAM data bus 3	L14	VSS	-	Ground (for I/O and for core)
E2	MD2	I/O	Wave ROM, SDRAM data bus 2	L18	CKE	O	The clock is enable for SDRAM
E3	MD10	I/O	Wave ROM, SDRAM data bus 10	L19	A13	O	SH2A-CPU address bus 13
E4	MD9	I/O	Wave ROM, SDRAM data bus 9	L20	A14	O	SH2A-CPU address bus 14
E5	VSS	-	Ground (for I/O and for core)	L21	D18/PE2	I/O	SH2A-CPU data bus 18/port PE 2
E6	VDD	-	The power supply +1.2V	L22	D17/PE1	I/O	SH2A-CPU data bus 17/port PE 1

PIN NO.	NAME	I/O	FUNCTION	PIN NO.	NAME	I/O	FUNCTION
M1	MA19/NFD3	O/, I/O	Wave ROM, SDRAM address bus 19/Wave NAND flash data bus 3	V17	VDD	-	The power supply +1.2V
M2	MA18/NFD2	O/, I/O	Wave ROM, SDRAM address bus 18/Wave NAND flash data bus 2	V18	VCCQ	-	The power supply +3.3V
M3	MA8	O	Wave ROM, SDRAM address bus 8	V19	A24	O	SH2A-CPU address bus 24
M4	MA7	O	Wave ROM, SDRAM address bus 7	V20	A23	O	SH2A-CPU address bus 23
M5	MA6	O	Wave ROM, SDRAM address bus 6	V21	D5	I/O	SH2A-CPU data bus 5
M9	VSS	-	Ground (for I/O and for core)	V22	D6	I/O	SH2A-CPU data bus 6
M10	VSS	-	Ground (for I/O and for core)	W1	PB6	I/O	Parallel port B 6
M11	VSS	-	Ground (for I/O and for core)	W2	PB7	I/O	Parallel port B 7
M12	VSS	-	Ground (for I/O and for core)	W3	ED0/PC0	I/O	External CPU data bus 0/Port C 0
M13	VSS	-	Ground (for I/O and for core)	W4	VDD	-	The power supply +1.2V
M14	VSS	-	Ground (for I/O and for core)	W5	ED10/PD2	I/O	External CPU data bus 10/Port D 2
M18	A1	O	SH2A-CPU address bus 1	W6	ED14/PD6	I/O	External CPU data bus 14/Port D 6
M19	WE2N/DQMUL/PH0	O	D23-D16 at byte writing of D23-D16 (active Low)/SDRAM is selected/port H 0	W7	EA3/PK2	I/O	External CPU address bus 3/Port K 2
M20	CASLN	O	CAS output for SDRAM (Low active)	W8	RDQ1	I/O	SDRAM data bus 1 for DSP
M21	D16/PE0	I/O	SH2A-CPU data bus 16/port PE 0	W9	RDQ3	I/O	SDRAM data bus 3 for DSP
M22	VSS	-	The power supply for internal cores(0V)	W10	RDQ5	I/O	SDRAM data bus 5 for DSP
N1	MA5	O	Wave ROM, SDRAM address bus 5	W11	RDQ7	I/O	SDRAM data bus 7 for DSP
N2	MA4		Wave ROM, SDRAM address bus 4	W12	RRASN	O	RAS output of SDRAM for DSP (Low active)
N3	MA3	O	Wave ROM, SDRAM address bus 3	W13	RA11	O	SDRAM address bus 11 for DSP
N4	MA2	O	Wave ROM, SDRAM address bus 2	W14	RA2	O	SDRAM address bus 2 for DSP
N5	VDD	-	The power supply +1.2V	W15	RA4	O	SDRAM address bus 4 for DSP
N9	VSS	-	Ground (for I/O and for core)	W16	AUXI/DREQ3/PK7	I	AUX input/DMA forwarding demand input from external device to channel 3/Port K7
N10	VSS	-	Ground (for I/O and for core)	W17	SDI0/PK5	I	Serial audio input 0/port K5
N11	VSS	-	Ground (for I/O and for core)	W18	BW_MD0	I	Setting of width of SH2A-CPU data bus
N12	VSS	-	Ground (for I/O and for core)	W19	VCCQ	-	The power supply +3.3V
N13	VSS	-	Ground (for I/O and for core)	W20	A25	O	SH2A-CPU address bus 25
N14	VSS	-	Ground (for I/O and for core)	W21	D3	I/O	SH2A-CPU data bus 3
N18	VDD	-	The power supply +1.2V	W22	D4	I/O	SH2A-CPU data bus 4
N19	RASLN	O	RAS output for SDRAM (Low active)	Y1	ED1/PC1	I/O	External CPU data bus 1/Port C 1
N20	WE1N/DQMLU	O	D15-D8 at byte writing of D15-D8 (active Low)/SDRAM is selected	Y2	ED2/PC2	I/O	External CPU data bus 2/Port C 2
N21	D15	I/O	SH2A-CPU data bus 15	Y3	VDD	-	The power supply for internal cores(1.2V)
N22	CKIO	O	Clock output for SDRAM	Y4	ED7/PC7	I/O	External CPU data bus 7/Port C 7
P1	MWRN	O	Wave ROM, SDRAM write enable (Low active)	Y5	ED11/PD3	I/O	External CPU data bus 11/Port D 3
P2	MCS1N/PG0	O	Wave ROM, SDRAM chip selection 1 (Low active)/port G 0	Y6	ED15/PD7	I/O	External CPU data bus 15/Port D 7
P3	MCS3N/MA27/PG2	O	Wave ROM, SDRAM chip selection 3 (Low active)/Wave ROM address bus 27/port G 2	Y7	ERDN/PK3	I/O	External CPU lead is enable (Low active)/Port K 3
P4	BTCHG	Ish	Switch control of boot ROM	Y8	RDQ2	I/O	SDRAM data bus 2 for DSP
P5	VSS	-	Ground (for I/O and for core)	Y9	RDQ4	I/O	SDRAM data bus 4 for DSP
P9	VSS	-	Ground (for I/O and for core)	Y10	RDQ6	I/O	SDRAM data bus 6 for DSP
P10	VSS	-	Ground (for I/O and for core)	Y11	RWEN	O	WE output of SDRAM for DSP (Low active)
P11	VSS	-	Ground (for I/O and for core)	Y12	RCASN	O	CAS output of SDRAM for DSP (Low active)
P12	VSS	-	Ground (for I/O and for core)	Y13	RBS	O	SDRAM bank selection for DSP
P13	VSS	-	Ground (for I/O and for core)	Y14	RA1	O	SDRAM address bus 1 for DSP
P14	VSS	-	Ground (for I/O and for core)	Y15	RA3	O	SDRAM address bus 3 for DSP
P18	VSS	-	Ground (for I/O and for core)	Y16	DITO/PH7	O	Digital audio output/Port H7
P19	A16	O	SH2A-CPU address bus 16	Y17	SYI	Ish	Synchronous input from external device
P20	A15	O	SH2A-CPU address bus 15	Y18	SDI1/DREQ2/PK6	I	Synchronous input from external device
P21	D13	I/O	SH2A-CPU data bus 13	Y19	SDO0	O	Serial audio output 0
P22	D14	I/O	SH2A-CPU data bus 14	Y20	VCCQ	-	The power supply +3.3V
R1	MCS2N/MA28/PG1	O	Wave ROM, SDRAM chip selection 2 (Low active)/Wave ROM address bus 28/port G 1	Y21	D1	I/O	SH2A-CPU data bus 1
R2	NFCSN	O	Wave NAND flash chip is enable (Low active)	Y22	D2	I/O	SH2A-CPU data bus 2
R3	NFRDY	I	Lady input for shape of waves NAND flash	AA1	ED3/PC3	I/O	External CPU data bus 3/Port C 3
R4	NFRDFB	Ish	Wave NAND flash data taking lead enable input	AA2	VDD	-	The power supply +1.2V
R5	VCCQ	-	The power supply +3.3V	AA3	ED5/PC5	I/O	External CPU data bus 5/Port C 5
R18	VCCQ	-	The power supply +3.3V	AA4	ED8/PD0	I/O	External CPU data bus 8/Port D 0
R19	A18	O	SH2A-CPU address bus 18	AA5	ED12/PD4	I/O	External CPU data bus 12/Port D 4
R20	A17	O	SH2A-CPU address bus 17	AA6	EA1/PK0	I/O	External CPU address bus 1/Port K 0
R21	D11	I/O	SH2A-CPU data bus 11	AA7	EWRN/PK4	I/O	External CPU light is enable (Low active)/Port K 4
R22	D12	I/O	SH2A-CPU data bus 12	AA8	RDQ15	I/O	SDRAM data bus 15 for DSP
T1	SCLK	O	Clock output for shape of waves SDRAM	AA9	RDQ13	I/O	SDRAM data bus 13 for DSP
T2	NFRDN/PG3	O	Wave NAND flash enable lead (Low active)/port G 3	AA10	RDQ11	I/O	SDRAM data bus 11 for DSP
T3	NFWEN/PG4	O	Wave NAND flash enable lead (Low active)/port G 4	AA11	RDQ9	I/O	SDRAM data bus 9 for DSP
T4	NFWPN/PG5	O	Wave NAND flashlight protecting (Low active)/port G 5	AA12	RCLK	O	SDRAM mask output for DSP
T5	VSS	-	The power supply for internal cores(0V)	AA13	RA12	O	SDRAM address bus 12 for DSP
T18	VSS	-	The power supply for internal cores(0V)	AA14	RA9	O	SDRAM address bus 9 for DSP
T19	A20	O	SH2A-CPU address bus 20	AA15	RA7	O	SDRAM address bus 7 for DSP
T20	A19	O	SH2A-CPU address bus 19	AA16	RA5	O	SDRAM address bus 5 for DSP
T21	D9	I/O	SH2A-CPU data bus 9	AA17	WCLK2/SDO3	O	Word clock output 2/Serial audio output 3
T22	D10	I/O	SH2A-CPU data bus 10	AA18	BCLK	O	Bit clock output /(After hard reset is released, the H/L change is started)
U1	NFALE/PG6	O	Wave NAND flash address is enable/port G 6	AA19	SDO1	O	Serial audio output 1
U2	NFCLE/PG7	O	Wave NAND flash command is enable/port G 7	AA20	RDWRN	O	The SH2A-CPU lead light is enable
U3	PB0	I/O	Parallel port B 0	AA21	VCCQ	-	The power supply +3.3V
U4	PB1	I/O	Parallel port B 1	AA22	D0	I/O	SH2A-CPU data bus 0
U5	VDD	-	The power supply +1.2V	AB1	VDD	-	The power supply +1.2V
U18	VCCQ	-	The power supply +3.3V	AB2	ED4/PC4	I/O	External CPU data bus 4/Port C 4
U19	A22	O	SH2A-CPU address bus 22	AB3	ED6/PC6	I/O	External CPU data bus 6/Port C 6
U20	A21	O	SH2A-CPU address bus 21	AB4	ED9/PD1	I/O	External CPU data bus 9/Port D 1
U21	D7	I/O	SH2A-CPU data bus 7	AB5	ED13/PD5	I/O	External CPU data bus 13/Port D 5
U22	D8	I/O	SH2A-CPU data bus 8	AB6	EA2/PK1	I/O	External CPU address bus 2/Port K 1
V1	PB2	I/O	Parallel port B 2	AB7	ECSN	Ish	External CPU chip selection
V2	PB3	I/O	Parallel port B 3	AB8	RDQ14	I/O	SDRAM data bus 14 for DSP
V3	PB4	I/O	Parallel port B 4	AB9	RDQ12	I/O	SDRAM data bus 12 for DSP
V4	PB5	I/O	Parallel port B 5	AB10	RDQ10	I/O	SDRAM data bus 10 for DSP
V5	VDD	-	Parallel port B 5	AB11	RDQ8	I/O	SDRAM data bus 8 for DSP
V6	VDD	-	The power supply +1.2V	AB12	RDQM	O	SDRAM mask output for DSP
V7	VSS	-	Ground (for I/O and for core)	AB13	RA13	O	SDRAM address bus 13 for DSP
V8	RDQ0	I/O	SDRAM data bus 0 for DSP	AB14	RA10	O	SDRAM address bus 13 for DSP
V9	VSS	-	Ground (for I/O and for core)	AB15	RA8	O	SDRAM address bus 8 for DSP
V10	VCCQ	-	The power supply +3.3V	AB16	RA6	O	SDRAM address bus 6 for DSP
V11	VCCQ	-	The power supply +3.3V	AB17	SYSCLK	O	System clock output/(After hard reset is released, the H/L change is started)
V12	VCCQ	-	The power supply +3.3V	AB18	WCLK	O	Word clock output (After hard reset is released, the H/L change is started)
V13	VCCQ	-	The power supply +3.3V	AB19	"SYSCLK2/SDO2/PH6"	O	System clock output 2: For TI Co. DAC/Serial audio input 2/Port H 6
V14	VSS	-	Ground (for I/O and for core)	AB20	RDN	O	The SH2A-CPU lead is enable (Low active)
V15	VCCQ	-	The power supply +3.3V	AB21	"WE0N/DQMLL"	O	D7-D0 at byte writing of D7-D0 (active Low)/SDRAM is selected
V16	CKOEN	I	Clock output control for SDRAM	AB22	VCCQ	-	The power supply +3.3V

■ CIRCUIT BOARDS

- **DCPJ Circuit Board** (YE683B0)..... 22
- **DM Circuit Borad** (YD988C0) 23
- **HP Circuit Borad** (XQ389C0)..... 24
- **MK-H Circuit Borad** (YD333D0)..... 27
- **MK-L Circuit Borad** (YD333D0). 28
- **MK-M Circuit Borad** (YD333D0). 29
- **PEDAL Circuit Borad** (X9561D0) 26
- **PL Circuit Borad** (XR898A0)..... 24
- **PNL Circuit Borad** (YE108C0) 25
- **PNR Circuit Borad** (YE108C0) 25
- **USB Circuit Borad** (YE683B0)..... 24

Note: See parts list for details of circuit board component parts.

• DCPJ Circuit Board

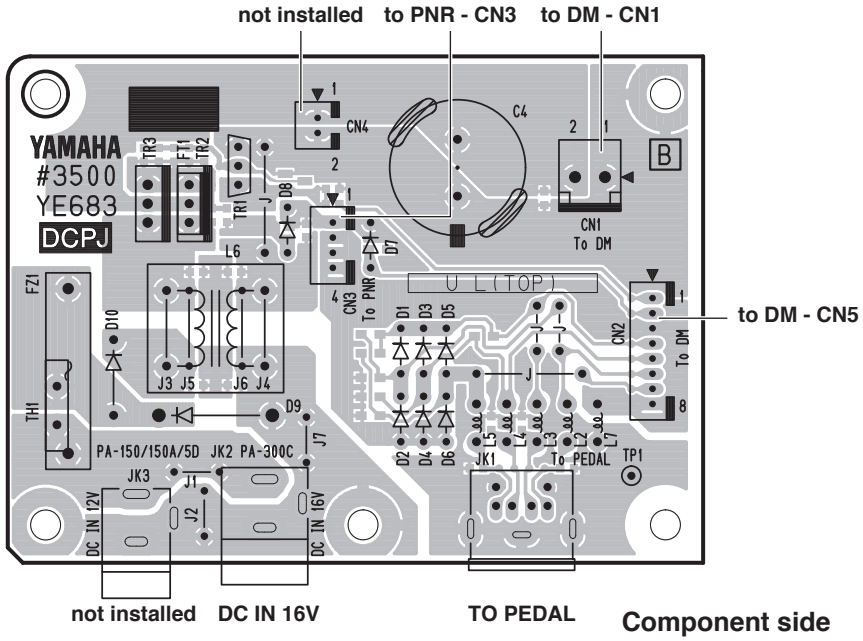

Component side

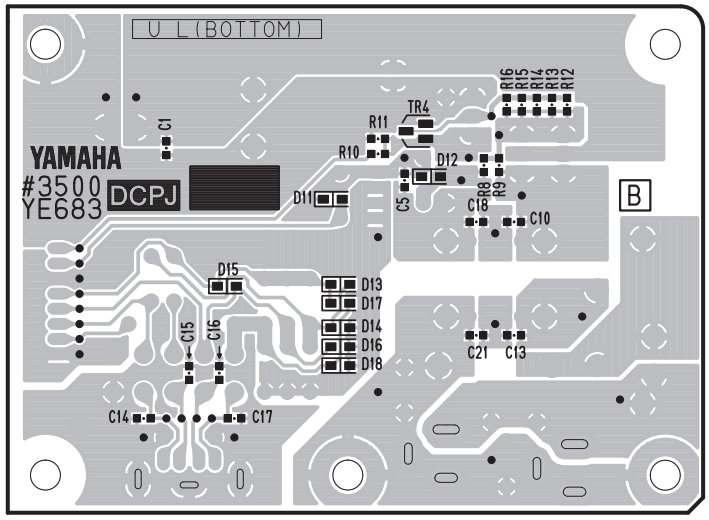

Pattern side

2NA-ZD30470

• DM Circuit Board

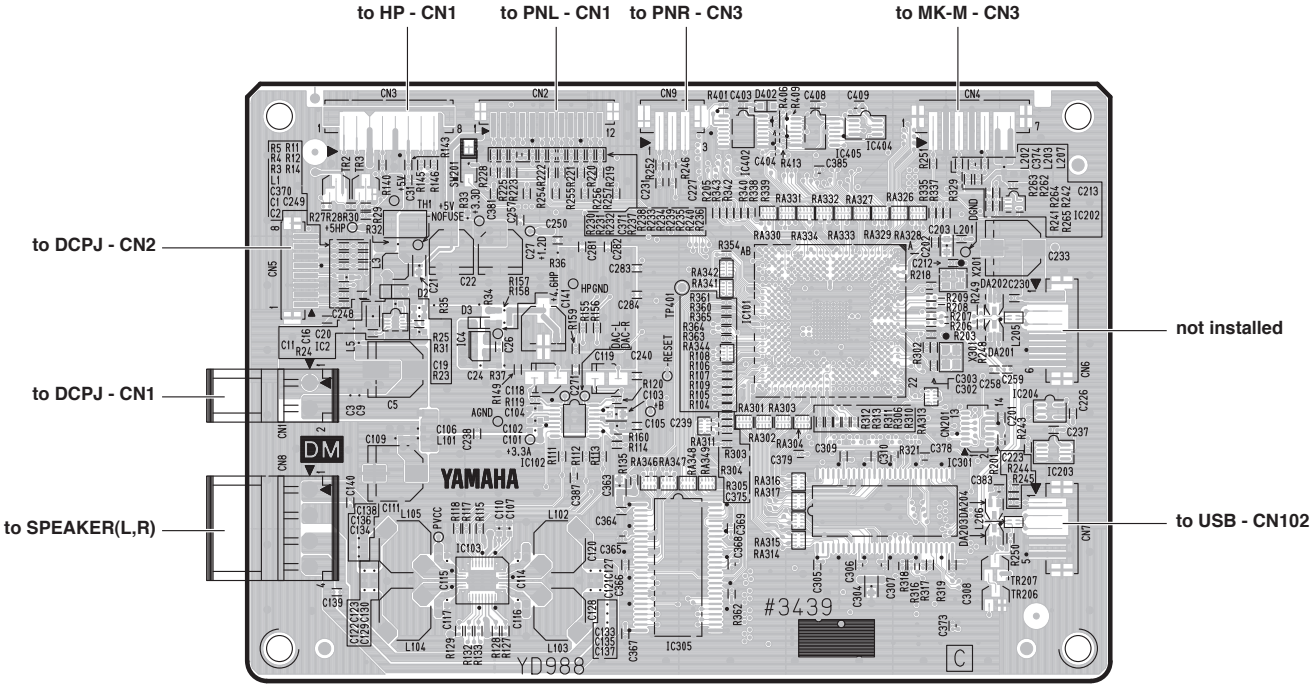

Component side

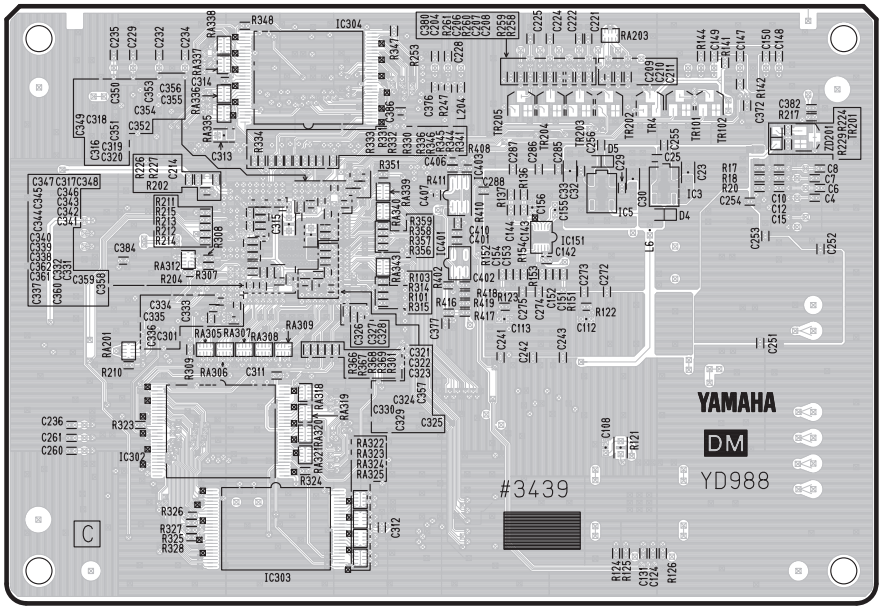

Pattern side

• PL Circuit Board

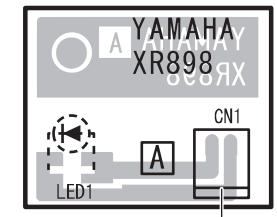

Component side

• HP Circuit Board

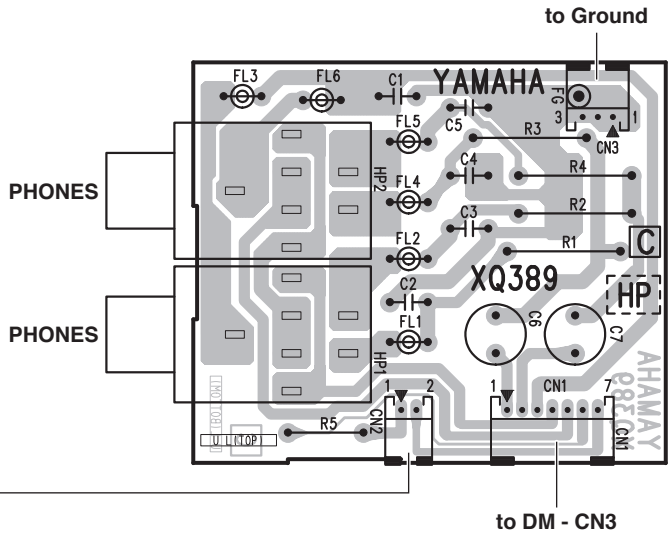

Component side

• USB Circuit Board

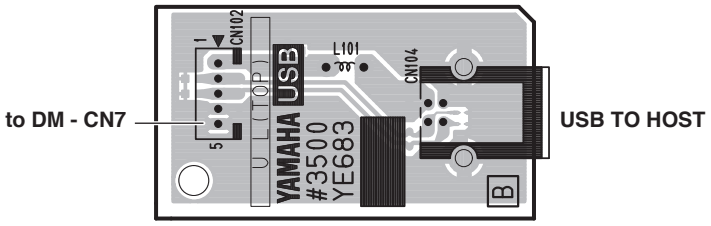

Component side

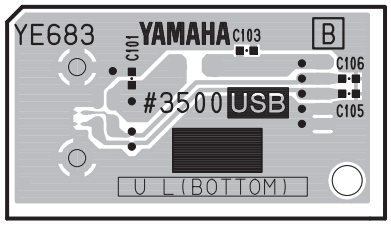

Pattern side

HP: 2NA-WV24780⚠4
PL: 2NA-VN63740
USB: 2NA-ZD30470

• PNL Circuit Board

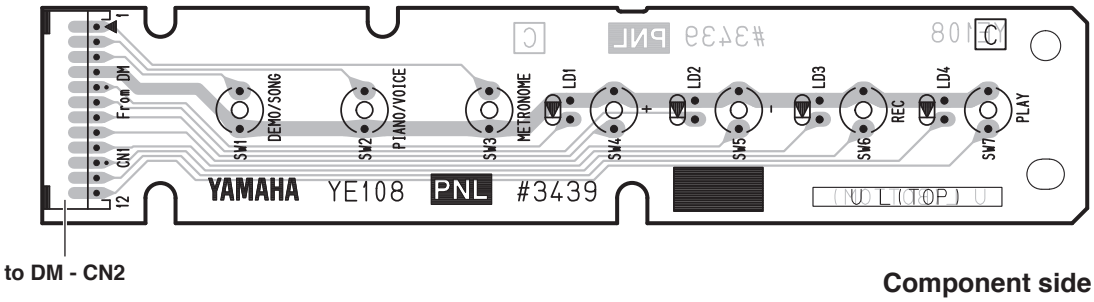

Component side

• PNR Circuit Board

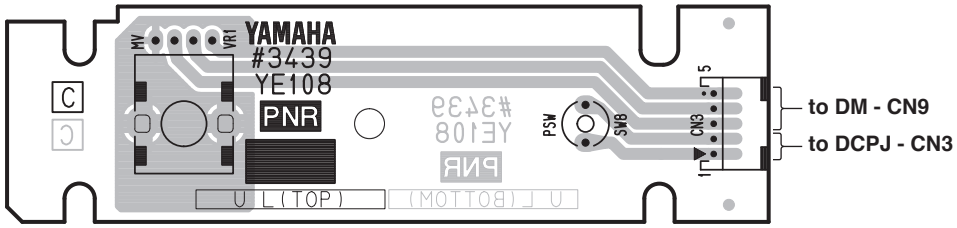

Component side

PNL, PNR: 2NA-ZA50220

• PEDAL Circuit Board

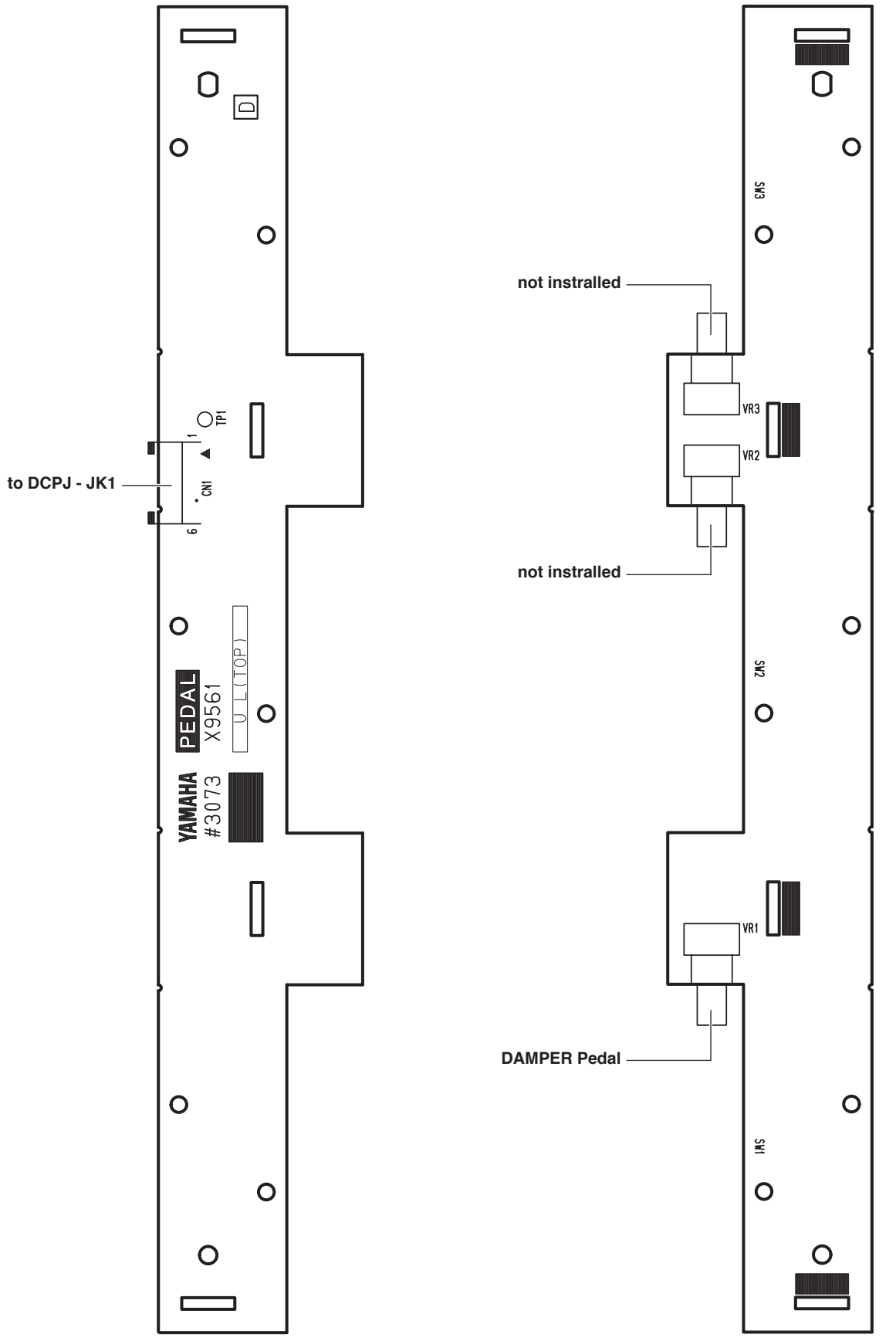

Component side

Pattern side

2NA-WQ65870⚠

• MK-H Circuit Board

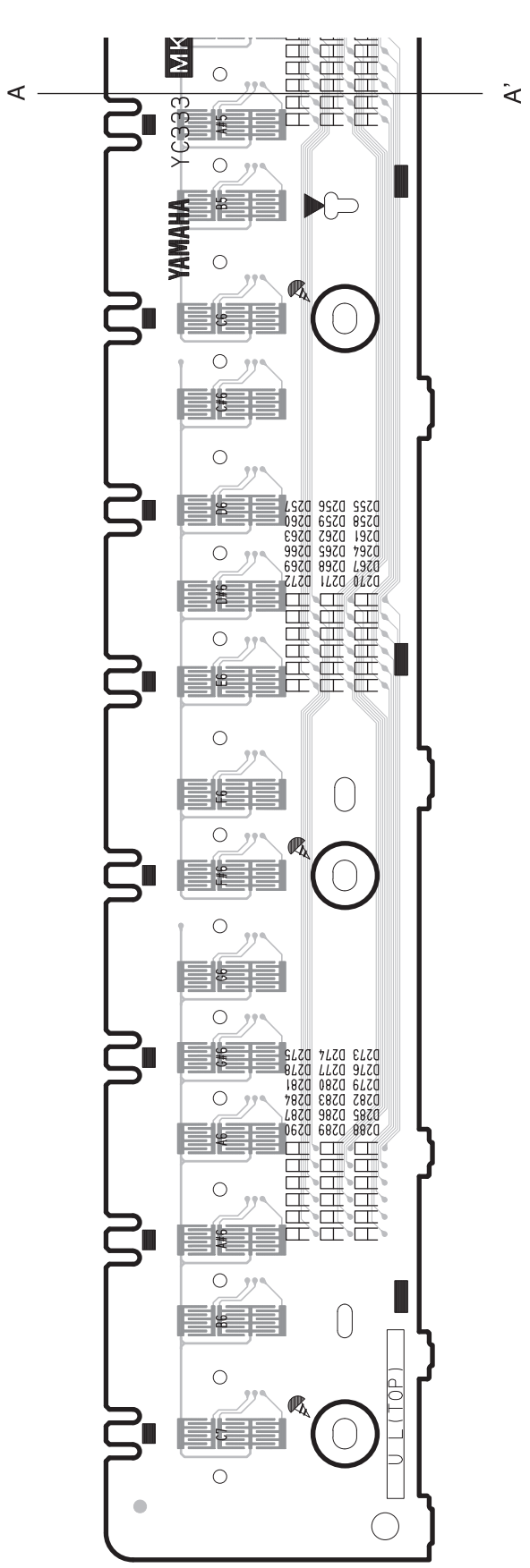

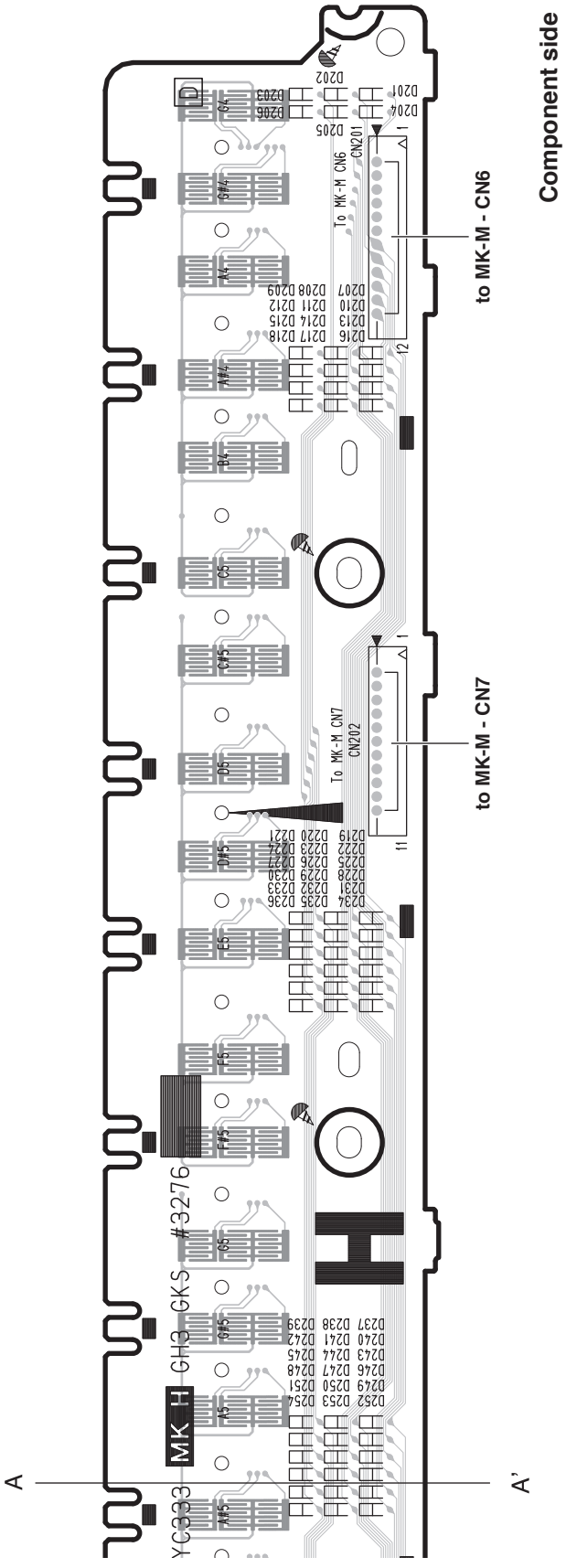

2NAK8-WV35460

• MK-L Circuit Board

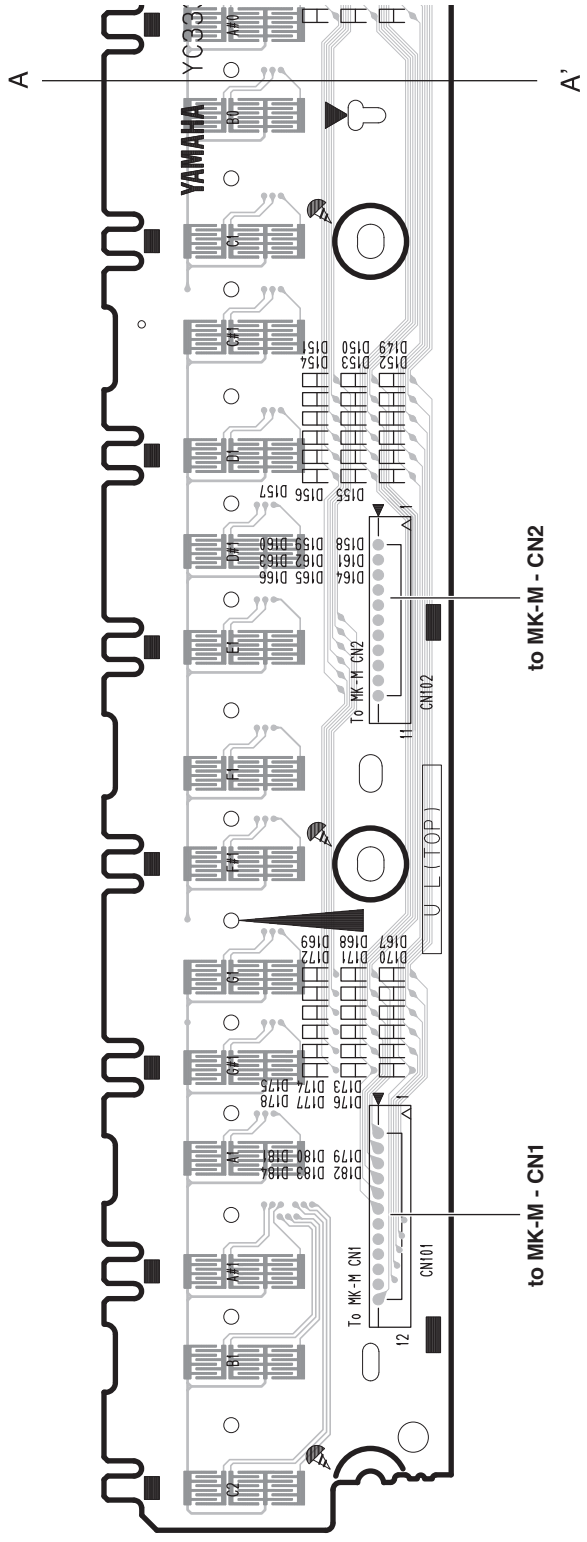

- **MK-M Circuit Board**

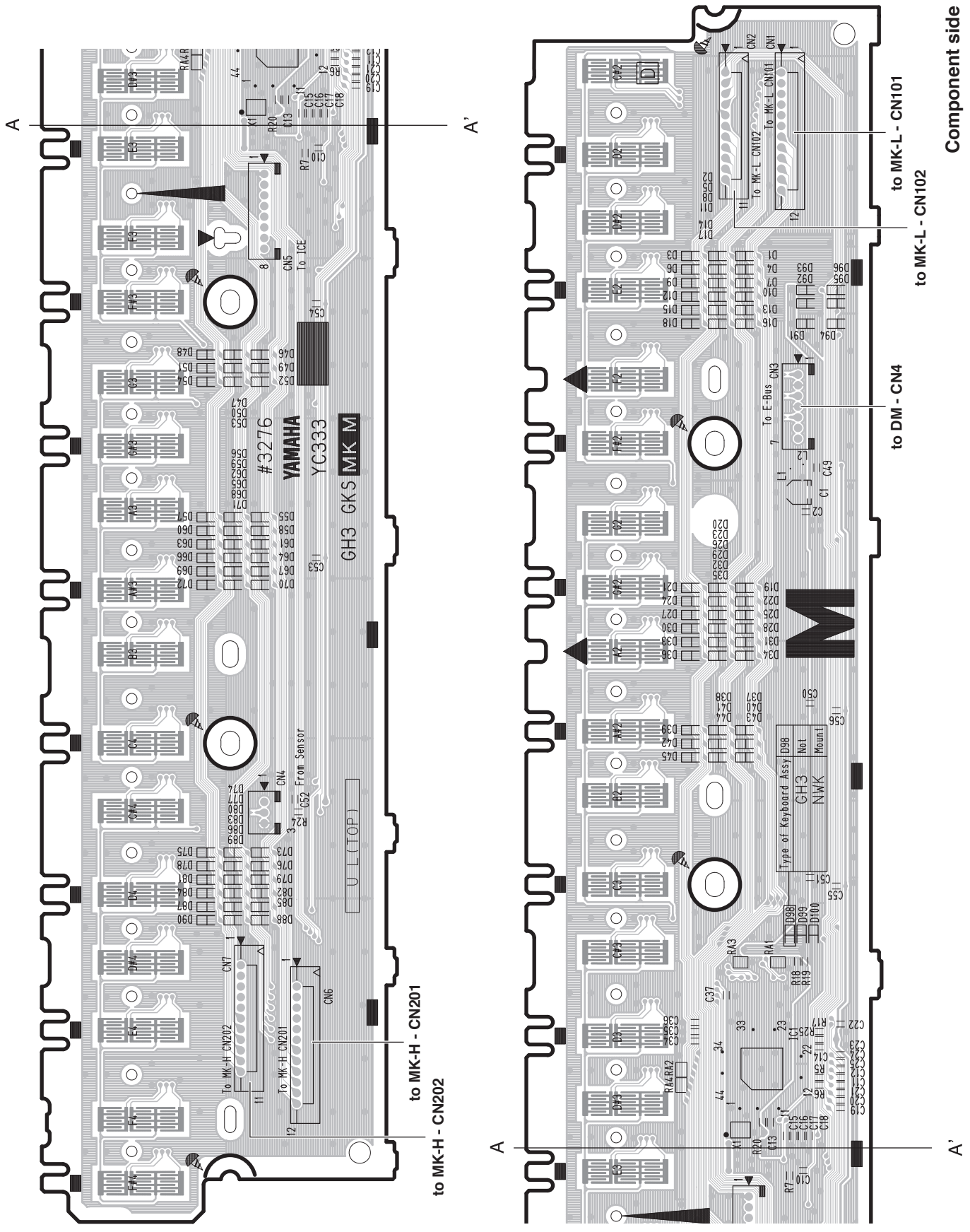

2NAK8-WV35460

■ TEST PROGRAM

1. Preparation

• Following items are required for testing. (Input impedance of measuring instrument is more than 1 MΩ.)
- Level meter (with JIS-C filter)
- Frequency counter: Below decimal point 3 or more figures measurement is possible.
- USB cable
- AC adaptor PA-300C
- Headphone

• Set each control as follows.
- MASTER VOLUME: Max
- PEDAL: OFF

Connect the stereo plug to only one terminal of the [PHONES] jack when taking measurements. (33 Ω load)

2. To enter Test Program

Turn on the power with [C#2], [F2] and [G#2] keys pressed and held simultaneously. (Fig. 1)
Once the Test Program is started properly, the sine wave of A3 sounds. The sound stops when a key is pressed.

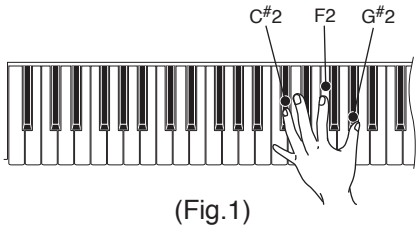

(Fig.1)

3. To proceed the test

Test items are listed in Table 1.
Press the corresponding key to select and execute each test. (See Fig. 2)
To enter the test item select mode after completing each test item, press the [DEMO/SONG] button.

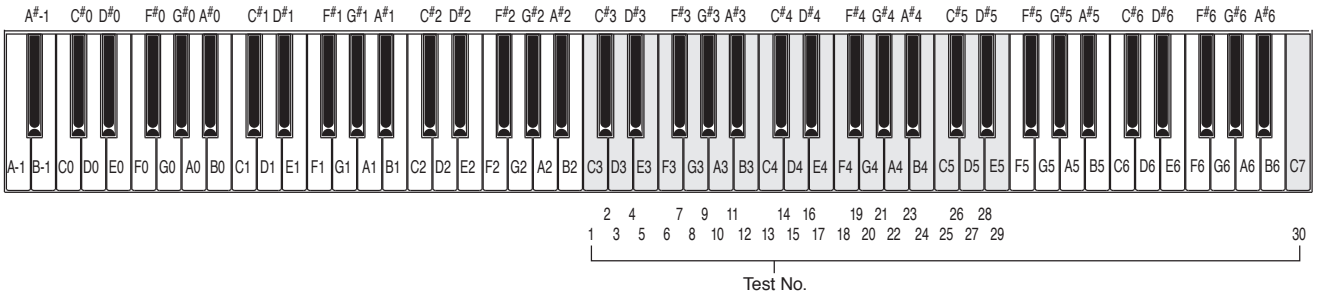

(Fig.2)

4. Test Result

Each test result is indicated by the sound.
When the test result is OK, the sine wave of C4 sounds.
When the test result is NG, the sine wave of C2 sounds.

Table 1 Test items

TEST No.	Key	Item	Test Function and Judgement Criteria
1	C3	ROM Version	To check the Main ROM version using C0-A2 keys. To check the Wave ROM version using C3-A5 keys. Press keys in the specified range and find the key where the sine wave sounds. Check the version by the scale of that key. (See Fig. 3) Press keys C0-A0 to check the integer of the Main ROM version. Press keys C1-A1 to check the first decimal place of the Main ROM version. Press keys C2-A2 to check the second decimal place of the Main ROM version. Press keys C3-A3 to check the integer of the Wave ROM version. Press keys C4-A4 to check the first decimal place of the Wave ROM version. Press keys C5-A5 to check the second decimal place of the Wave ROM version. When the number corresponding to the pressed key agrees with the current version, an OK (sine wave of C4) sound is generated and when disagrees, an NG (sine wave of C2) sound is generated. For the Key-to-number correspondence, refer to Fig. 3. Example) When the current version is Ver.1.00(Main ROM) When the C#0 key is pressed. the sine wave of C4 sounds, indicating 1 for the integer. When the C1 key is pressed, the sine wave of C4 sounds, indicating 0 for the first decimal place. When the C2 key is pressed, the sine wave of C4 sounds, indicating 1 for the second decimal place. In this way, the version 1.00 is confirmed. (The sine wave of C2 sounds when any key other than C#0, C1 and C2 is pressed.)
2	C#3	Memory check 1 All	To check all ROMs and RAMs connected to the CPU bus. For the OK test result, the sine wave of C4 sounds (for 1 second). For NG, the sine wave of C2 sounds (for 1 second). If it is OK, the four test checks below are not needed. 3. Master ROM check 1 4. RAM check 1 5. Wave ROM check 1 6. Effect RAM check 13.
3	D3	Master ROM check 1	To check the Master ROM connected to the CPU bus (Simplified check). For the OK test result, the sine wave of C4 sounds (for 1 second). For NG, the sine wave of C2 sounds (for 1 second).
4	D#3	RAM check 1	To check the RAM connected to the CPU bus (Simplified check). For the OK test result, the sine wave of C4 sounds (for 1 second). For NG, the sine wave of C2 sounds (for 1 second).
5	E3	Wave ROM check 1	To check the Wave ROM connected to the CPU bus (Simplified check). For the OK test result, the sine wave of C4 sounds (for 1 second). For NG, the sine wave of C2 sounds (for 1 second).
6	F3	Effect RAM check 1	To check the Effect RAM connected to the CPU bus (Simplified check). For the OK test result, the sine wave of C4 sounds (for 1 second). For NG, the sine wave of C2 sounds (for 1 second).

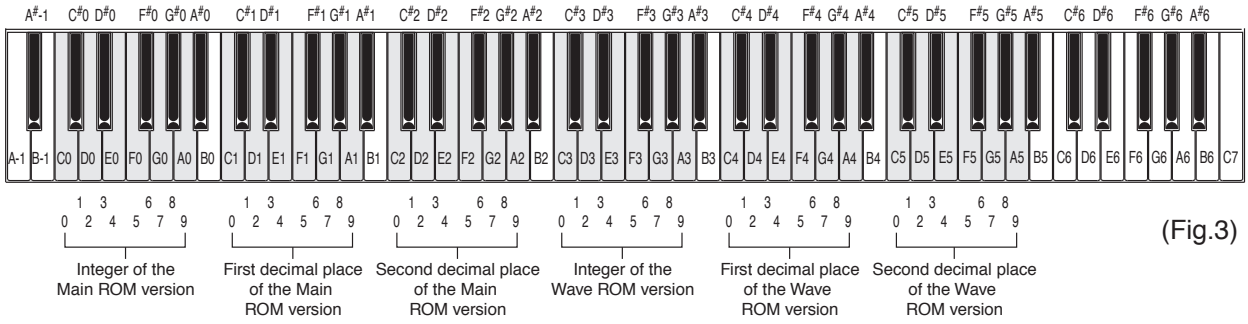

(Fig.3)

TEST No.	Key	Item	Test Function and Judgement Criteria
7	F#3	Pitch Precision check	Check that the sine wave of 441.0 Hz ± 0.2 Hz sounds at the same level on both the left and right channels simultaneously. Connect the frequency counter to the [PHONES] jack left or right for measurement. When the test item is ended with the [DEMO/SONG] button, the sound stops.
8	G3	Output Level R check	Check that the sine wave of C5 sounds at the designated level on right channel. Connect the level meter (with JIS-C filter) to the [PHONES] jack for measurement and check that the output level is as follows. PHONES L: Must be at least 40 dB less than Rch PHONES R: -5.8 dBu ± 2 dB When the test item is ended with the [DEMO/SONG] button, the sound stops.
9	G#3	Output Level L check	Check that the sine wave of C5 sounds at the designated level on left channel. Connect the level meter (with JIS-C filter) to the [PHONES] jack for measurement and check that the output level is as follows. PHONES L: -5.8 dBu ± 2dB PHONES R: Must be at least 40 dB less than Lch When the test item is ended with the [DEMO/SONG] button, the sound stops.
10	A3	SP MUTE check	When the test begins, the sine wave of C5 sounds on both the left and right channels. Check that sound stops when the [+/R] button is pressed and sounds when the [-/L] button is pressed. During this test, connection/disconnection of the headphone is not detected. (The sound is output from the speaker even when the headphone is connected) When the test item is ended with the [DEMO/SONG] button, the sound stops.
11	A#3	MUTE check	When the test begins, the sine wave of C5 sounds on both the left and right channels. Check that sound stops when the [+/R] button is pressed and sounds when the [-/L] button is pressed. (the speaker output and [PHONES] jack output) When the test item is ended with the [DEMO/SONG] button, the sound stops.
12	B3	FS Circuit check	When the test begins, the sine wave of A3 sounds on both the left and right channels. Check that sound stops when the [+/R] button is pressed and sounds when the [-/L] button is pressed. If the failure detection system is not detected, the sine wave of A3 continues sounding. When the test item is ended with the [DEMO/SONG] button, the sound stops.
13	C4	HP Insertion check	When the test begins, the sine wave of C3 sounds from the speaker. When the headphones are inserted into the [PHONES] jack, the sound from the speaker stops and the sine wave of C4 sounds from the [PHONES] jack. For the OK test result, after the headphone is removed, the sine wave of C4 sounds from the speaker (for 1 second). For the NG test result, the sound does not stop when the headphone is inserted.
14	C#4	SW check	Press switches one at a time in the order as in Table 2 (p. 33). The sine wave sounds at the scale corresponding to each switch being pressed (Refer to Table 2 in p. 33.). Also, when there is an LED corresponding to that switch, the LED lights up until the next switch is pressed. Check that all switches are pressed correctly, resulting in OK. Pressing a switch other than specified ones results in NG. When the pressed switch is not detected even though it is actually pressed, no sound is produced and the test results in NG. For the OK test result, the sine wave of C4 sounds (for 1 second).
15	D4	All LED ON check	All LEDs should light up.
16	D#4	Red LED ON check	Red LED should light up.
17	E4	Green LED ON check	All green LEDs should light up.
18	F4	Master Volume check	Turn MASTER VOLUME in the order MIN. → MAX → midpoint or below. For the OK test result, the sine wave of C4 sounds (for 1 second).
19	F#4	Soft Pedal check	When the soft pedal is turned on, the sine wave of C3 sounds (for 1 second). When it is released, the sine wave of C4 sounds (for 1 second). This means the test result is OK.
20	G4	Sostenuto Pedal check	When the sostenuto pedal is turned on, the sine wave of C3 sounds (for 1 second). When it is released, the sine wave of C4 sounds (for 1 second). This means the test result is OK.

TEST No.	Key	Item	Test Function and Judgement Criteria
21	G#4	Damper Pedal check	When the damper pedal is turned on, the sine wave of C3 sounds (for 1 second). When it is released, the sine wave of C4 sounds (for 1 second). This means the test result is OK.
22	A4	USB check	Start the test with the [USB TO HOST] terminal connected to a PC with a USB cable. *** Use a PC with the USB-MIDI driver installed and Thru setting completed.** For the OK test result, the sine wave of C4 sounds (for 1 second). For NG, the sine wave of C2 sounds (for 1 second).
23	A#4	Keyboard Type Check	Determines if the appropriate keyboard is connected. When the GH3 keyboard is connected, the sine wave of C4 sounds (for 1 second). the sine wave of C2 sounds (for 1 second) otherwise.
24	B4	Make Position Check	Checks GH3 keyboard Make Position. (PingPongPang mode) 0, +4 and +7 notes are output with a velocity of 127 for every three Makes. For example, if pressing the C key on the keyboard, each note CEG is output. Releasing the key, sound output sequentially stops.
25	C5	Master ROM check 2	To check the Master ROM connected to the CPU bus (Full address). For the OK test result, the sine wave of C4 sounds (for 1 second). For NG, the sine wave of C2 sounds (for 1 second).
26	C#5	RAM check 2	To check the RAM connected to the CPU bus (Full address). For the OK test result, the sine wave of C4 sounds (for 1 second). For NG, the sine wave of C2 sounds (for 1 second).
27	D5	Wave ROM check 2	To check the Wave ROM connected to the CPU bus (Full address). For the OK test result, the sine wave of C4 sounds (for 1 second). For NG, the sine wave of C2 sounds (for 1 second). * It takes about 30 seconds before checking is completed.
28	D#5	Effect RAM check 2	To check the Effect RAM connected to the CPU bus (Full address). For the OK test result, the sine wave of C4 sounds (for 1 second). For NG, the sine wave of C2 sounds (for 1 second). * It takes about 8 seconds before checking is completed.
29	E5	Factory Set	Initialize all the backup areas so as to obtain the factory outgoing setting state. (RAM and Flash) *** Note that all the data will be erased.** For the OK result, the sine wave of C4 sounds (for 1 second). For NG, the sine wave of C2 sounds (for 1 second). * In this stage, the flag for initialization is raised only and initialization will be executed when the power is turned on next time. After executing this factory setting, be sure to execute Test No. 30 "Test Mode Exit". Initialization of the memory is actually executed when the program is restarted (RE BOOT). **Once it is started, do not turn off the power until LED flashing comes to an end.**
30	C7	Test Mode Exit	Close the test program, system-reset the voice, and start in normal mode.

Table 2 Switch test order

Order	Switch name	LED to light up	Pitch
1	DEMO/SONG		C2
2	PIANO/VOICE		C#2
3	METRONOME		D2
4	+/R	+/R (Green)	D#2
5	–/L	–/L (Green)	E2
6	REC	REC (Red)	F2
7	PLAY	PLAY (Green)	F#2

• Inspections of the others

1. MASTER VOLUME

Usually, it judges by feeling inspection, and when there is a doubt, it judges in measured value.
The amount of change should be the following value.
Test program item:Output Level R Check
/Output Level L Check
Maximum attenuation: Not less than 70 dB

2. NOISE

When nothing is pronounced, L and R ch should become below the following value.
PHONES L, R: less than -90 dBu

■ DM CIRCUIT BOARD CHECK METHOD

The DM Circuit Board is provided with test points for service check purposes.
Check the test points on the DM Circuit Board if the following symptoms appear.

Symptoms and check items

1) The power indicator not lit with Power SW ON ⇒ Check items ① to ⑦ sequentially
2) No sound or distorted sound ⇒ Check items ① , ③ , ⑤ , ⑧ and ⑨ and OUTPUT check items.

TEST POINT

NO.	Test Point	Circuit	Judgment criteria	Measured by	Parts with possible defects
①	+B	Power supply voltage detect	More than 15.0V	Multimeter	TR3 or TH1(On DCPJ Cirtcuit Board)
②	PVCC	Power supply voltage for Power Amplifier	More than 15.0V	Multimeter	L101
③	+5V	5V power for digital circuits	5.0V±0.2V	Multimeter	IC2
④	+3.3D	3.3V power for digital circuits	3.3V±0.1V	Multimeter	IC3
⑤	+3.3A	3.3V power for analog circuits	3.3V±0.1V with AGND	Multimeter	L6
⑥	+1.2D	1.2V power for digital circuits	1.2V±0.1V	Multimeter	IC5
⑦	-RESET	CPU & memory reset signal	3.3V±0.3V	Multimeter	IC401 or IC403
⑧	DAC-L	DAC output, L channel	There shall be audio signal without distortion.	Signal Checker	IC101 or IC102
⑨	DAC-R	DAC output, R channel	There shall be audio signal without distortion.	Signal Checker	IC101 or IC102

Note1: Use the standard AC adapter PA-300C for check operation.
Note2: It measures by opposite DGND except special notes.

Output

NO.	SPEAKER OUTPUT	PHONES/OUTPUT	DAC-L/R TEST POINT	Parts with possible defects
1	×	×	×	IC101
2	×	×	○	IC101 or Error Detect
3	○	×	×	IC102
4	×	○	○	IC101,IC103 or HP JACK
5	○	×	○	IC151 or HP JACK

Note1: “O” mark expresses normalcy and “x” mark expresses a fieled state.

DM Circuit Board (ZH57250)

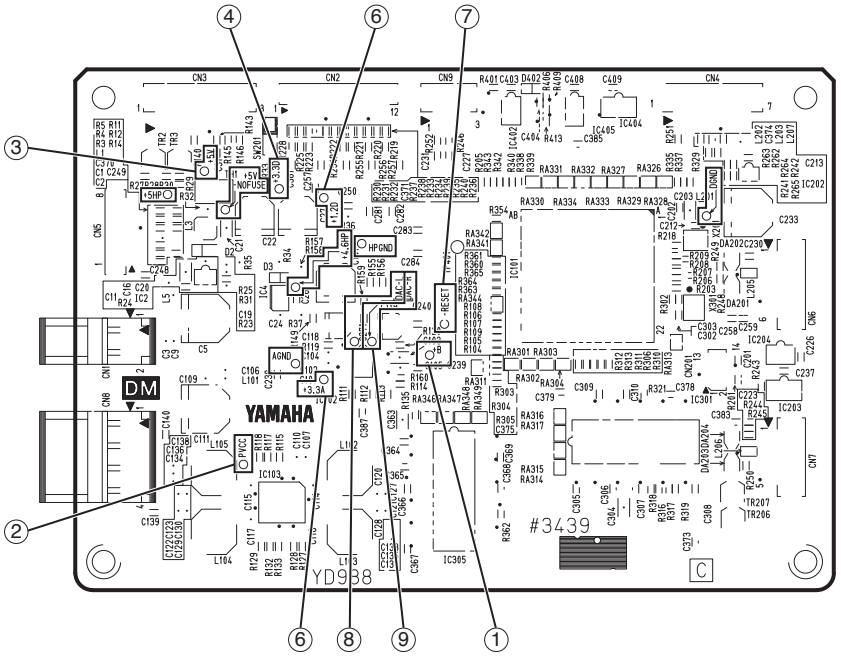

Component Side

INITIAL SETTING

- POWER SWITCH : OFF
- MASTER VOLUME: MIN.

INITIALIZING THE SETTINGS

1. Backup Clear

This operation clears the backup data (function settings) of the internal flash ROM.
The function setting when the power is turned on returns to the default setting.

Operation procedure

Hold the far right key (C7) and turn on the power.

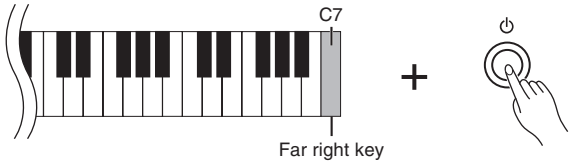

Note

· Do not turn off the power during initialization (while the [+/R], [-/L], [PLAY], and [REC] LEDs are flashing).
· If this instrument somehow becomes disabled or malfunctions, turn off the power then execute Initialization.

2. All Memory Clear

This operation clears the backup data of the internal flash ROM, as well as the user songs and the external song data.
The function setting when the power is turned on returns to the default setting.

Operation procedure

Hold the [F#5], [G5], and [A#5] keys simultaneously and turn on the power.

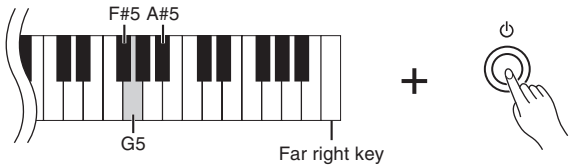

Note

· Do not turn off the power during initialization (while the [+/R], [-/L], [PLAY], and [REC] LEDs are flashing).
· When this operation is performed, all song data held is lost.
Back up user song data in advance.

■ SYSTEM BOOTING FLOW CHART

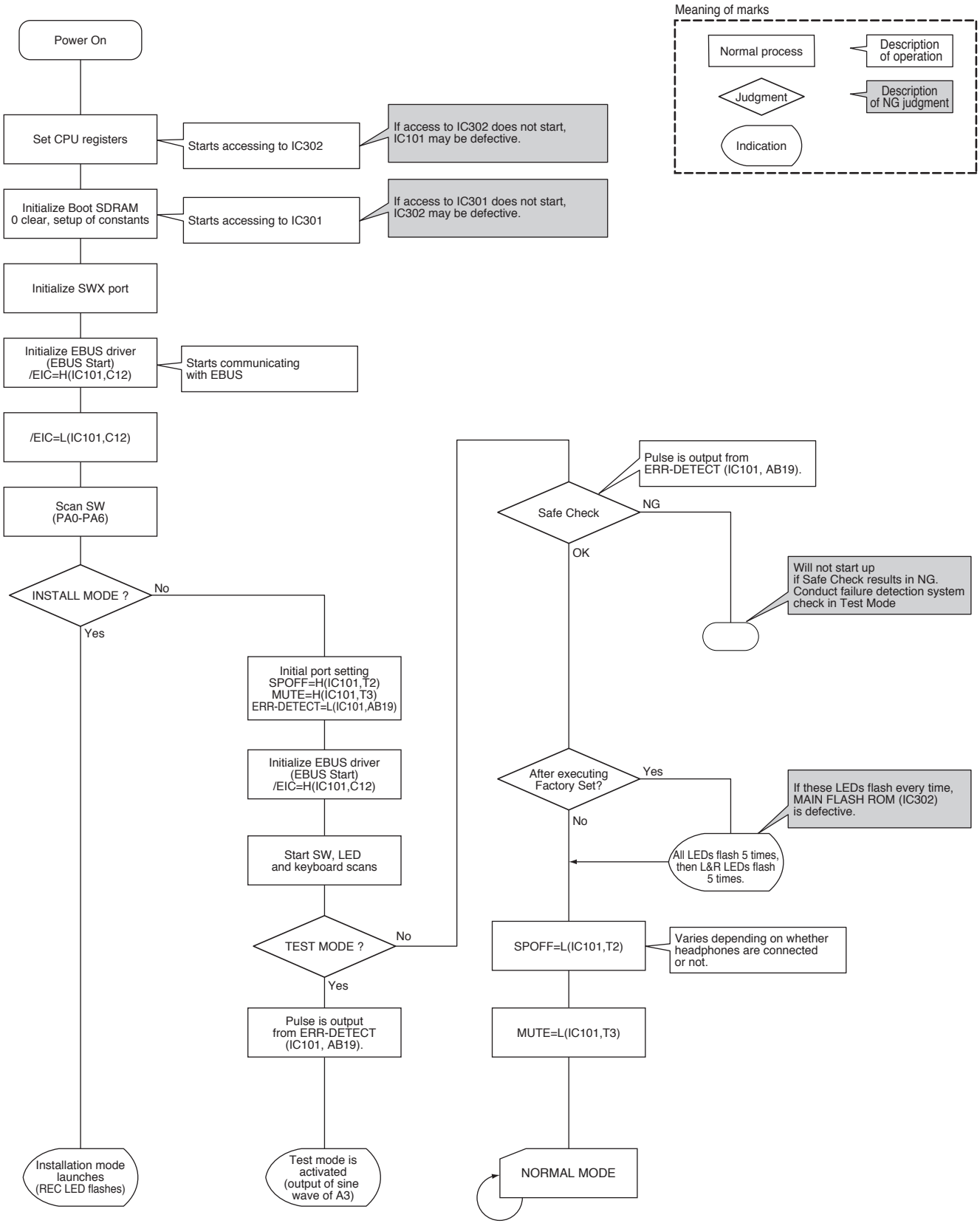

* "After executing Factory Set" refers to the condition of turning on power after executing "Factory Set" in Test Program.
* "Safe Check" refers to the confirmation of whether Mute is activated when ERR-DETECT pulse becomes discontinuous.

Clavinova®

CLP-525B/CLP-525R/CLP-525PE

PARTS LIST

■ CONTENTS

OVERALL ASSEMBLY 2
FRONT RAIL ASSEMBLY 9
MUSIC REST ASSEMBLY..... 10
TOP BOARD ASSEMBLY.....11
BACK TOP RAIL ASSEMBLY..... 12
KEY COVER ASSEMBLY 13
SIDE BOARD ASSEMBLY 14
KEY BLOCK ASSEMBLY L..... 16
KEY BLOCK ASSEMBLY R 17
KEYBOARD ASSEMBLY..... 18
PEDAL BOX ASSEMBLY 20
PEDAL ASSEMBLY (R)/PEDAL ASSEMBLY (Q) 21
BENCH (BC-108BK/BC-108DR/BC-108PE) 22
ELECTRICAL PARTS..... 24

Notes : DESTINATION ABBREVIATIONS

A : Australian model	M : South African model
B : British model	O : Chinese model
C : Canadian model	P : Brazilian model
D : German model	Q : South-east Asia model
E : European model	T : Taiwan model
F : French model	U : U.S.A. model
H : North European model	V : General export model (110V)
I : Indonesian model	W: General export model (220V)
J : Japanese model	N,X: General export model
K : Korean model	Y : Export model

■ WARNING

Components having special characteristics are marked ⚠ and must be replaced with parts having specifications equal to those originally installed.

- ■ The numbers in “QTY” shows quantities for each unit.
- ■ The parts with “--” in “Part No.” are not available as spare parts.
- ■ This mark “ } ” in the REMARKS column means these parts are interchangeable.
- ■ The second letter of the shaded ( ) part number is I, not one.
- ■ The second letter of the shaded ( ) part number is O, not zero.

■ OVERALL ASSEMBLY

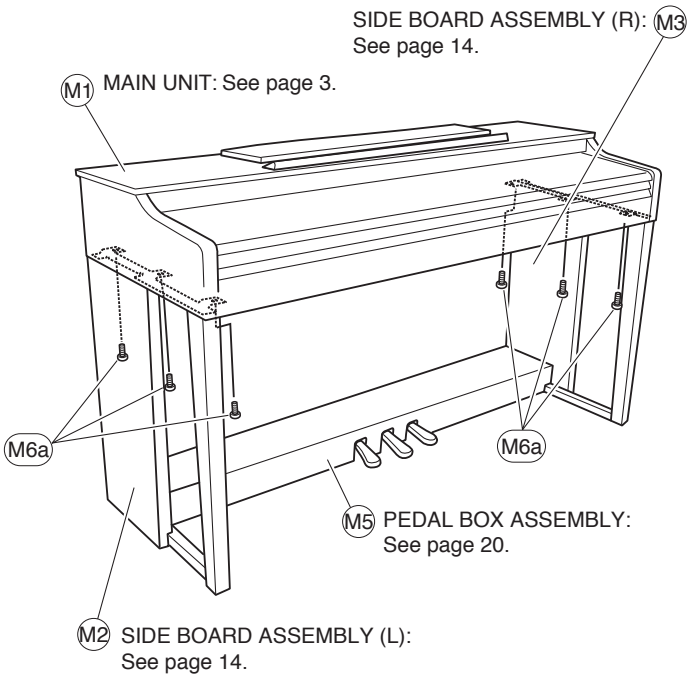

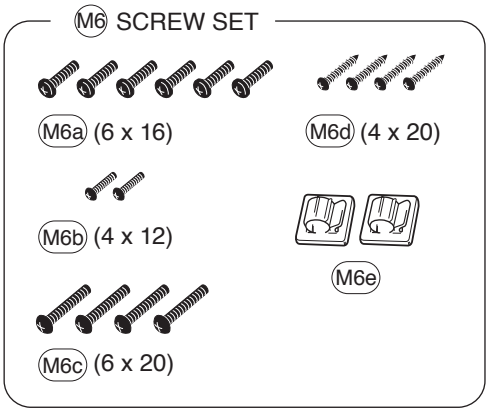

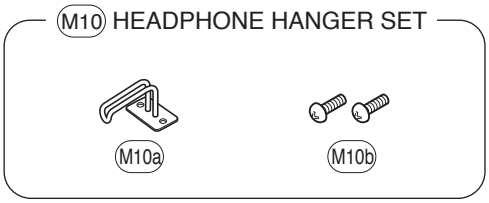



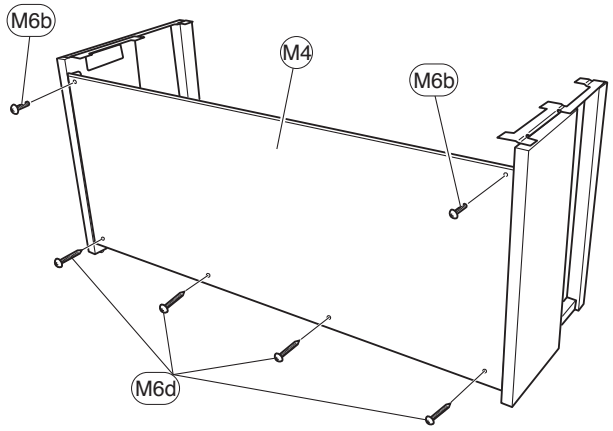

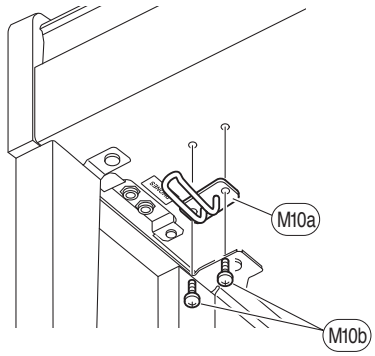

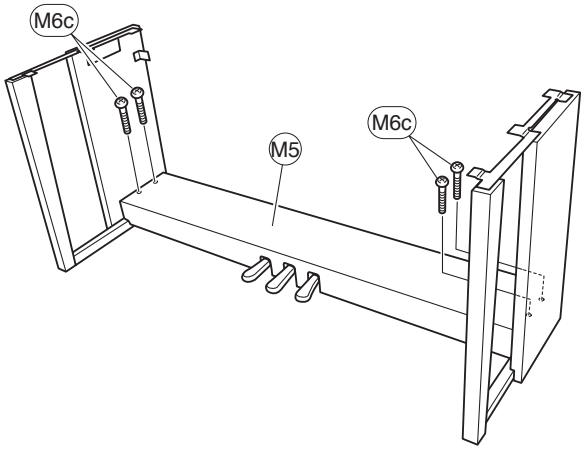

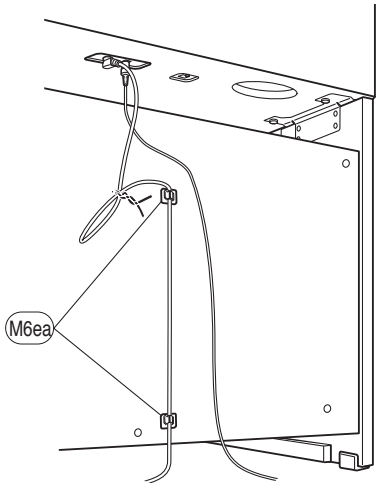

● **Rear view**

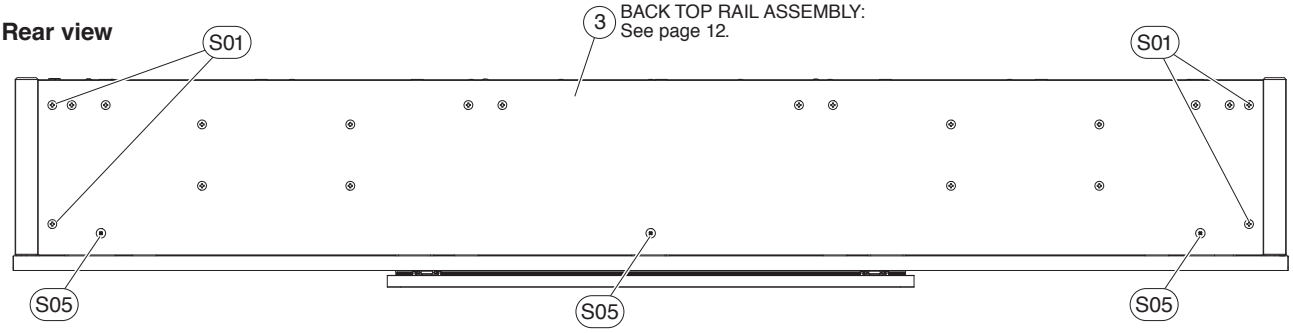

● **Top view 1**

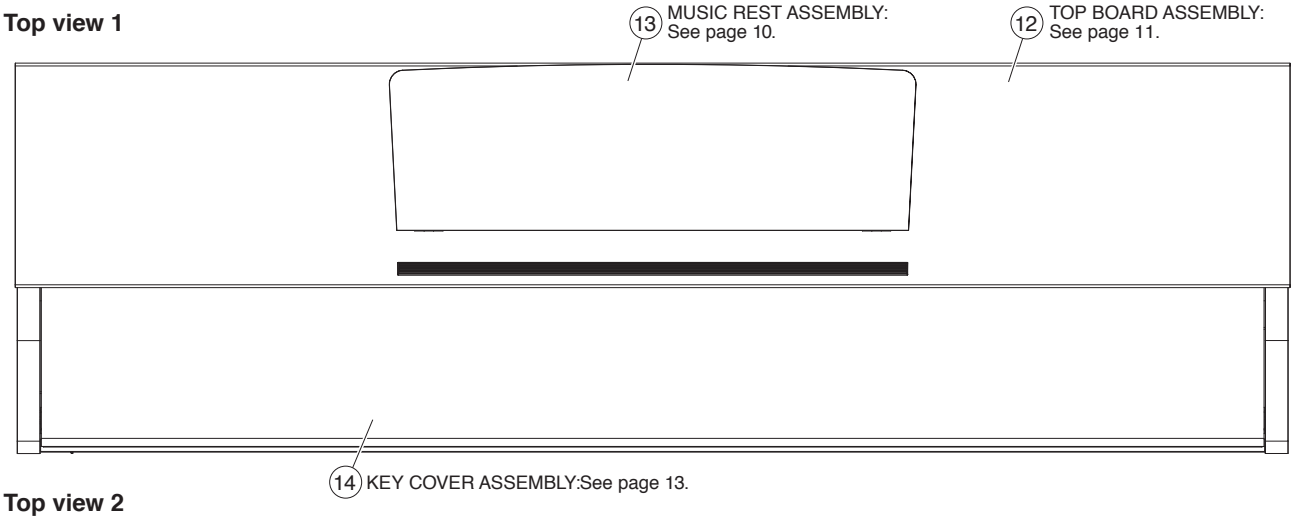

● **Top view 2**

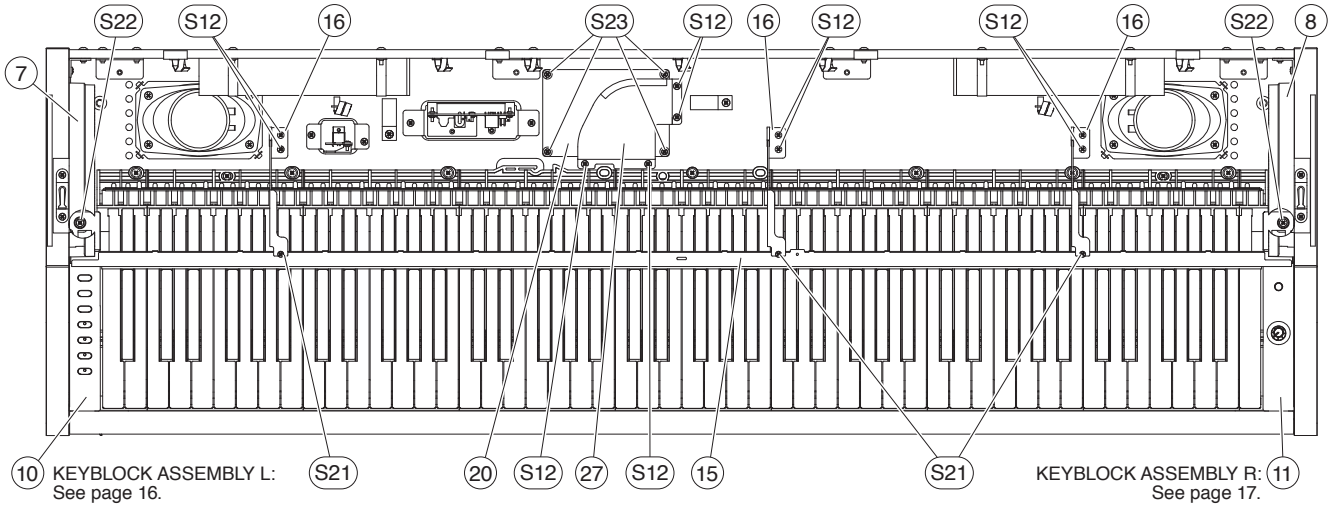

● Side view 1

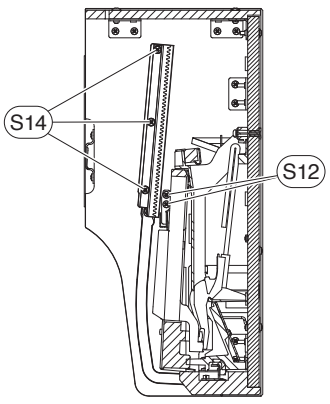

● Side view 2

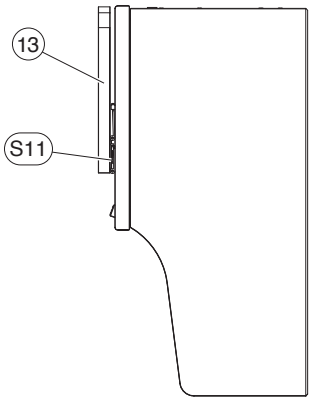

● **Bottom view**

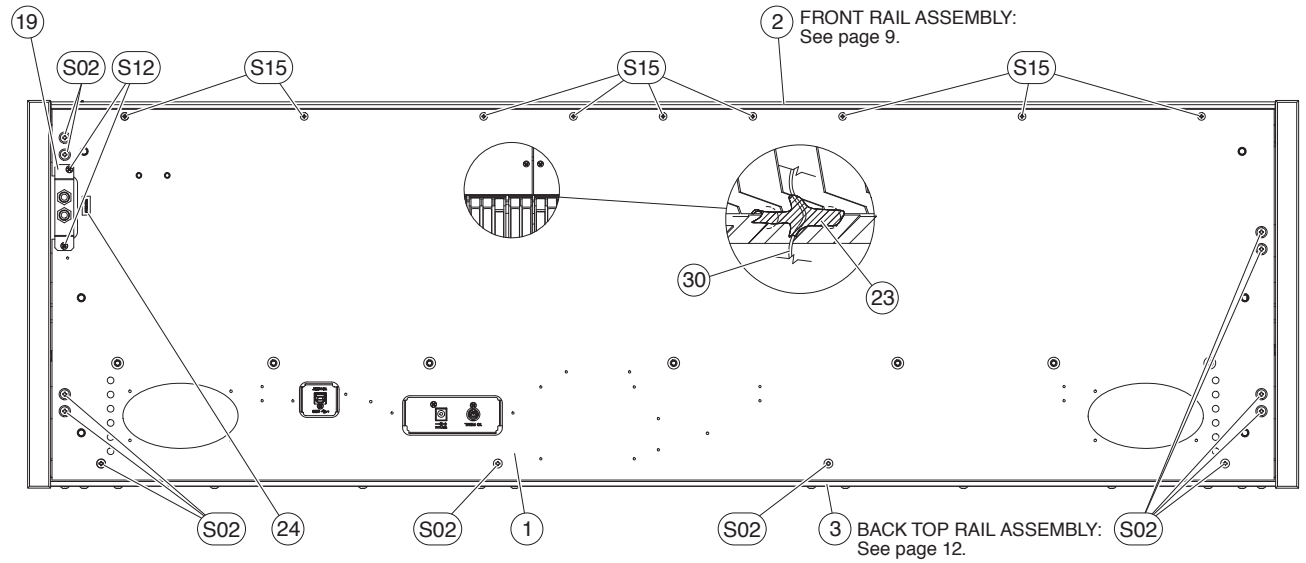

● **Top view 3**

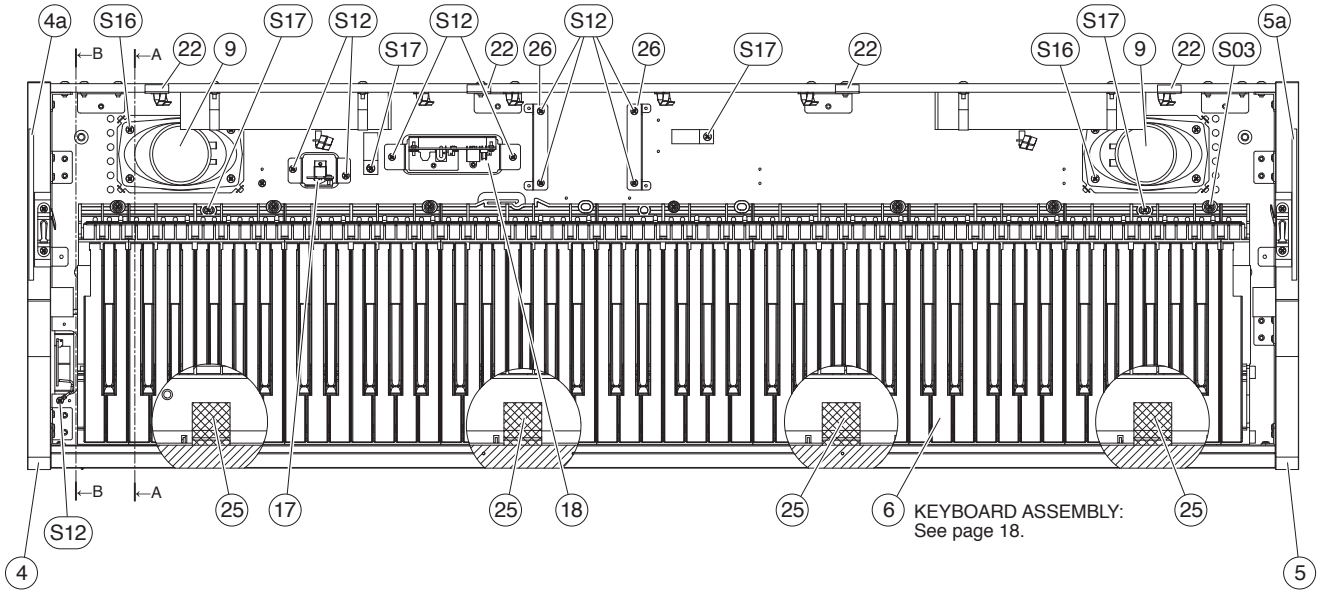

● **Side view 3**

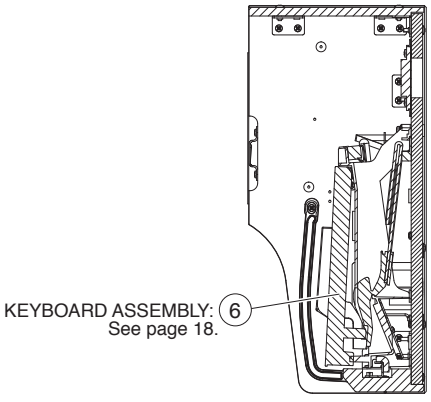

● **Side view 4**

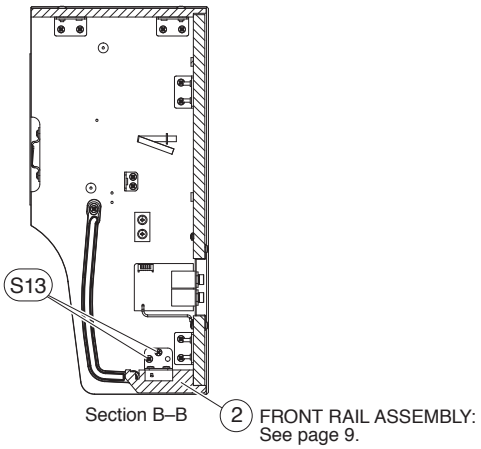

	REF NO.	PART NO.	DESCRIPTION		部品名	REMARKS	QTY	RANK
			OVERALL ASSEMBLY		総組立	CLP-525B		
	M1	--	MAIN UNIT	CLP-525B	メインユニット	(ZG86290)		
*	M2	ZG864700	SIDE BOARD ASSEMBLY L	CLP-525B	側板Ａｓｓ’ｙＬ			
*	M3	ZG865000	SIDE BOARD ASSEMBLY R	CLP-525B	側板Ａｓｓ’ｙＲ			
*	M4	ZG885900	REAR PANEL ASSEMBLY	CLP-525	裏板Ａｓｓ’ｙ			
	M4a	--	FELT	470X5X1	フェルト	(ZH64710)	2	
	M5	--	PEDAL BOX ASSEMBLY	CLP-525B	ペダルＢＯＸＡｓｓ’ｙ	(ZG88380)		
	M6	WY678000	SCREW SET	CL	ネジセット			05
	M10	--	HEADPHONE HANGER SET	CL	ヘッドホンハンガーセット	(V874060)		
		--	MAIN UNIT	CLP-525B	メインユニット	(ZG86290)		
	1	--	KEY BED ASSEMBLY		棚板集成	(ZG88880)		
*	2	ZH641200	FRONT RAIL ASSEMBLY	CLP-525B	口棒Ａｓｓ’ｙ			
*	3	ZG889000	BACK TOP RAIL ASSEMBLY		背面框Ａｓｓ’ｙ			
*	4	ZG889400	ARM ASSEMBLY L	CLP-525B	腕木Ａｓｓ’ｙＬ			
	4a	--	FELT	160 5 ADHESIVE TAP	フェルト	(WV36270)		
*	5	ZG889700	ARM ASSEMBLY R	CLP-525B	腕木Ａｓｓ’ｙＲ			
	5a	--	FELT	160 5 ADHESIVE TAP	フェルト	(WV36270)		
*	6	ZH197400	GH3 GKS KEYBOARD	AI ONLY W KEY	ＧＨ３ＧＫＳ鍵盤			
	7	V851850R	RACK LEFT		ラック成形品（Ｌ）			02
	8	V851860R	RACK RIGHT		ラック成形品（Ｒ）			02
*	9	YF774A00	LOUD SPEAKER	6X12cm 4ohm 10W	スピーカ		2	
	10	--	KEY BLOCK ASSEMBLY L		拍子木Ａｓｓ’ｙＬ	(ZG89560)		
	11	--	KEY BLOCK ASSEMBLY R		拍子木Ａｓｓ’ｙＲ	(ZG89570)		
*	12	ZG896000	TOP BOARD ASSEMBLY	CLP-525B	屋根Ａｓｓ’ｙ			
*	13	ZG896700	MUSIC REST ASSEMBLY	CLP-525B	譜面板Ａｓｓ’ｙ			
*	14	ZG978100	KEY COVER ASSEMBLY	CLP-525B	スライド蓋Ａｓｓ’ｙ			
	15	ZE112800	STOPPER RAIL ASSEMBLY		鍵盤押さえＡｓｓ’ｙ			07
	15a	--	FELT		フェルト	(ZA69300)		
	15b	--	NONWOVEN FABLIC CLOT	X0.25	不織布	(V862270)	2	
	16	--	ANGLE ASSEMBLY		アングルＡｓｓ’ｙ	(WN64720)	3	
	17	ZE113000	USB-H ASSEMBLY	CL	ＵＳＢ－Ｈ Ａｓｓ’ｙ			06
	17a	--	CIRCUIT BOARD	USB	ＵＳＢシート	(ZE29920)		
	18	ZE113100	DCPJ ASSEMBLY	CL	ＤＣＰＪ Ａｓｓ’ｙ			07
	18a	--	CIRCUIT BOARD	DCPJ	ＤＣＰＪシート	(ZE29910)		
	19	ZF156900	JACK ASSEMBLY HP	CL	ＨＰジャックＡｓｓ’ｙ			06
	19a	--	CIRCUIT BOARD	HP	ＨＰシート	(ZF15680)		
*	20	ZH572400	CIRCUIT BOARD	DM	ＤＭシート			
	22	--	FELT	25X25X1 N5000NS	フェルト	(V591600)	4	
	23	--	FILAMENT TAPE	12X50	粘着テープ	(VP83460)		
	24	--	PHONES LABEL		ＰＨＯＮＥＳラベル	(VS47810)		
	25	--	EL ADHESIVE TAPE 0 40X20m	AL-40 40MMX20M	導電性粘着テープ	(WA53090)		
	26	--	DM ANGLE		ＤＭ金具	(ZG05420)	2	
	27	--	DM SHIELD ASSEMBLY		ＤＭシールドＡｓｓ’ｙ	(ZG14540)		
	30	--	WH COMMON ASSEMBLY		束線構成	(ZE29800)		
	S01	WF74150R	TRUSS HEAD SCREW	4.0X14 MFZN2B3	ＴＰ＃１＋ＴＲＵＳ		4	
	S02	WE995900	TRUSS HEAD SCREW	4.0X20 MFZN2W3	小ネジ＋ＴＲＵＳ		12	01
	S03	WF00150R	PAN HEAD SCREW	5.0X25 MFZN2W3	小ネジ＋ＰＡＮ		7	01
	S05	ZE721900	SCREW + WASHER	4.0X16 WASHD8T0.5	特殊ねじ＋平座金		3	01
	S11	WE971200	BIND HEAD TAPPING SCREW-1	3.0X16 MFZN2B3	ＴＰ＃１＋ＢＩＮＤ		4	
	S12	--	BIND HEAD TAPPING SCREW-1	3.5X11 MFZN2W3	ＴＰ＃１＋ＢＩＮＤ	(WF83110)	25	
	S13	--	BIND HEAD TAPPING SCREW-1	3.5X16 MFZN2W3	ＴＰ＃１＋ＢＩＮＤ	(WE97070)	4	
	S14	WE971500	BIND HEAD TAPPING SCREW-1	3.5X20 MFZN2W3	ＴＰ＃１＋ＢＩＮＤ		6	
	S15	--	TRUSS HEAD TAPPING SCREW-1	3.5X30 MFZN2W3	ＴＰ＃１＋ＴＲＵＳ	(WE97990)	9	
	S16	WE96570R	TRUSS HEAD TAPPING SCREW-1	4.0X16 MFZN2W3	ＴＰ＃１＋ＴＲＵＳ		8	01
	S17	WE97190R	BIND HEAD TAPPING SCREW-1	4.0X14 MFZN2W3	ＴＰ＃１＋ＢＩＮＤ		4	01
	S21	WF02860R	BIND HEAD TAPPING SCREW	3.0X6 MFZN2B3	Ｂタイト＋ＢＩＮＤ		3	01
	S22	WE97450R	BIND HEAD TAPPING SCREW-B	4.0X10 MFZN2W3	Ｂタイト＋ＢＩＮＤ		2	01
	S23	WE774300	BIND HEAD TAPPING SCREW-B	3.0X8 MFZN2W3	Ｂタイト＋ＢＩＮＤ		4	
			ACCESSORIES		付属品			
		--	COMPLETE ASSEMBLY BENCH	BC-108BK	同梱品セット椅子	U,Y,K,P,I,O (ZH46980)		
⚠		WU691400	AC ADAPTOR	PA-300C COMMON	ＡＣアダプター	U,E,B,K,P,I,O		13
⚠		ZC295100	POWER CORD	UC 2P 7A 2.44M	電源コードセット	U		05
⚠		V2917100	AC CORD SET	E 2P 2.5M 2.5A	電源コードセット	E,I		05
⚠		V3126501	POWER SUPPLY CORD	B 2P 2.5M	電源コードセット	B		
⚠	*	ZG891000	POWER SUPPLY CORDSET	K 2P 2.5A	電源コードセット	K		
⚠		WU795100	POWER SUPPLY CORD	BRA 2P 2.5M 2.5A	電源コードセット	P		06
⚠		WC90170R	AC CODE SET CHN	GB 2P 2.5M	電源コードセット	O		05

＊: New Parts（新規部品）

RANK : Japan only

	REF NO.	PART NO.	DESCRIPTION		部品名	REMARKS	QTY	RANK
			OVERALL ASSEMBLY		総組立	CLP-525R		
	M1	--	MAIN UNIT	CLP-525R	メインユニット	(ZG86280)		
*	M2	ZG864600	SIDE BOARD ASSEMBLY L	CLP-525R	側板Ass'y L			
*	M3	ZG864900	SIDE BOARD ASSEMBLY R	CLP-525R	側板Ass'y R			
*	M4	ZG885900	REAR PANEL ASSEMBLY	CLP-525	裏板Ass'y			
	M4a	--	FELT	470X5X1	フェルト	(ZH64710)	2	
	M5	--	PEDAL BOX ASSEMBLY	CLP-525R	ペダルBOXAss'y	(ZG88370)		
	M6	WY678000	SCREW SET	CL	ネジセット			05
	M10	--	HEADPHONE HANGER SET	CL	ヘッドホンハンガーセット	(V874060)		
		--	MAIN UNIT	CLP-525R	メインユニット	(ZG86280)		
	1	--	KEY BED ASSEMBLY	CLP-525R	棚板集成	(ZG88880)		
*	2	ZH641100	FRONT RAIL ASSEMBLY	CLP-525R	口棒Ass'y			
*	3	ZG889000	BACK TOP RAIL ASSEMBLY	CLP-525R	背面框Ass'y			
*	4	ZG889300	ARM ASSEMBLY L	CLP-525R	腕木Ass'y L			
	4a	--	FELT	160 5 ADHESIVE TAP	フェルト	(WV36270)		
*	5	ZG889600	ARM ASSEMBLY R	CLP-525R	腕木Ass'y R			
	5a	--	FELT	160 5 ADHESIVE TAP	フェルト	(WV36270)		
*	6	ZH197400	GH3 GKS KEYBOARD	AI ONLY W KEY	GH3 GKS鍵盤			
	7	V851850R	RACK LEFT		ラック成形品(L)			02
	8	V851860R	RACK RIGHT		ラック成形品(R)			02
*	9	YF774A00	LOUD SPEAKER	6X12cm 4ohm 10W	スピーカ		2	
	10	--	KEY BLOCK ASSEMBLY L	CLP-525R	拍子木Ass'y L	(ZG89560)		
	11	--	KEY BLOCK ASSEMBLY R	CLP-525R	拍子木Ass'y R	(ZG89570)		
*	12	ZG895900	TOP BOARD ASSEMBLY	CLP-525R	屋根Ass'y			
*	13	ZG896600	MUSIC REST ASSEMBLY	CLP-525R	譜面板Ass'y			
*	14	ZG978000	KEY COVER ASSEMBLY	CLP-525R	スライド蓋Ass'y			
	15	ZE112800	STOPPER RAIL ASSEMBLY		鍵盤押さえAss'y			07
	15a	--	FELT		フェルト	(ZA69300)		
	15b	--	NONWOVEN FABLIC CLOT	X0.25	不織布	(V862270)	2	
	16	--	ANGLE ASSEMBLY		アングルAss'y	(WN64720)	3	
	17	ZE113000	USB-H ASSEMBLY	CL	USB-H Ass'y			06
	17a	--	CIRCUIT BOARD	USB	USBシート	(ZE29920)		
	18	ZE113100	DCPJ ASSEMBLY	CL	DCPJ Ass'y			07
	18a	--	CIRCUIT BOARD	DCPJ	DCPJシート	(ZE29910)		
	19	ZF156900	JACK ASSEMBLY HP	CL	HPジャックAss'y			06
	19a	--	CIRCUIT BOARD	HP	HPシート	(ZF15680)		
*	20	ZH572400	CIRCUIT BOARD	DM	DMシート			
	22	--	FELT	25X25X1 N5000NS	フェルト	(V591600)	4	
	23	--	FILAMENT TAPE	12X50	粘着テープ	(VP83460)		
	24	--	PHONES LABEL		PHONESラベル	(VS47810)		
	25	--	EL ADHESIVE TAPE 0 40X20m	AL-40 40MMX20M	導電性粘着テープ	(WA53090)		
	26	--	DM ANGLE		DM金具	(ZG05420)	2	
	27	--	DM SHIELD ASSEMBLY		DMシールドAss'y	(ZG14540)		
	30	--	WH COMMON ASSEMBLY		束線構成	(ZE29800)		
	S01	WF74150R	TRUSS HEAD SCREW	4.0X14 MFZN2B3	TP#1+TRUS		4	
	S02	WE995900	TRUSS HEAD SCREW	4.0X20 MFZN2W3	小ネジ+TRUS		12	01
	S03	WF00150R	PAN HEAD SCREW	5.0X25 MFZN2W3	小ネジ+PAN		7	01
	S05	ZE721900	SCREW + WASHER	4.0X16 WASHD8T0.5	特殊ねじ+平座金		3	01
	S11	WE971200	BIND HEAD TAPPING SCREW-1	3.0X16 MFZN2B3	TP#1+BIND		4	
	S12	--	BIND HEAD TAPPING SCREW-1	3.5X11 MFZN2W3	TP#1+BIND	(WF83110)	25	
	S13	--	BIND HEAD TAPPING SCREW-1	3.5X16 MFZN2W3	TP#1+BIND	(WE97070)	4	
	S14	WE971500	BIND HEAD TAPPING SCREW-1	3.5X20 MFZN2W3	TP#1+BIND		6	
	S15	--	TRUSS HEAD TAPPING SCREW-1	3.5X30 MFZN2W3	TP#1+TRUS	(WE97990)	9	
	S16	WE96570R	TRUSS HEAD TAPPING SCREW-1	4.0X16 MFZN2W3	TP#1+TRUS		8	01
	S17	WE97190R	BIND HEAD TAPPING SCREW-1	4.0X14 MFZN2W3	TP#1+BIND		4	01
	S21	WF02860R	BIND HEAD TAPPING SCREW	3.0X6 MFZN2B3	Bタイト+BIND		3	01
	S22	WE97450R	BIND HEAD TAPPING SCREW-B	4.0X10 MFZN2W3	Bタイト+BIND		2	01
	S23	WE774300	BIND HEAD TAPPING SCREW-B	3.0X8 MFZN2W3	Bタイト+BIND		4	
			ACCESSORIES		付属品			
		--	COMPLETE ASSEMBLY BENCH	BC-108DR	同梱品セット椅子	U,Y,K,P,I,O (ZH46960)		
⚠		WU691400	AC ADAPTOR	PA-300C COMMON	ACアダプター	U,E,B,K,P,I,O		13
⚠		ZC295100	POWER CORD	UC 2P 7A 2.44M	電源コードセット	U		05
⚠		V2917100	AC CORD SET	E 2P 2.5M 2.5A	電源コードセット	E,I		05
⚠		V3126501	POWER SUPPLY CORD	B 2P 2.5M	電源コードセット	B		
⚠ *		ZG891000	POWER SUPPLY CORDSET	K 2P 2.5A	電源コードセット	K		
⚠		WU795100	POWER SUPPLY CORD	BRA 2P 2.5M 2.5A	電源コードセット	P		06
⚠		WC90170R	AC CODE SET CHN	GB 2P 2.5M	電源コードセット	O		05

* : New Parts (新規部品)

RANK : Japan only

	REF NO.	PART NO.	DESCRIPTION		部品名	REMARKS	QTY	RANK
			OVERALL ASSEMBLY		総組立	CLP-525PE		
	M1	--	MAIN UNIT	CLP-525PE	メインユニット	(ZG86300)		
*	M2	ZG864800	SIDE BOARD ASSEMBLY L	CLP-525PE	側板Ａｓｓ’ｙＬ			
*	M3	ZG865100	SIDE BOARD ASSEMBLY R	CLP-525PE	側板Ａｓｓ’ｙＲ			
*	M4	ZG885900	REAR PANEL ASSEMBLY	CLP-525	裏板Ａｓｓ’ｙ			
	M4a	--	FELT	470X5X1	フェルト	(ZH64710)	2	
	M5	--	PEDAL BOX ASSEMBLY	CLP-525PE	ペダルＢＯＸＡｓｓ’ｙ	(ZG88390)		
	M6	WY678000	SCREW SET	CL	ネジセット			05
	M10	--	HEADPHONE HANGER SET	CL	ヘッドホンハンガーセット	(V874060)		
		--	MAIN UNIT	CLP-525PE	メインユニット	(ZG86300)		
	1	--	KEY BED ASSEMBLY		棚板集成	(ZG88880)		
*	2	ZH641300	FRONT RAIL ASSEMBLY	CLP-525PE	口棒Ａｓｓ’ｙ			
*	3	ZG889000	BACK TOP RAIL ASSEMBLY		背面框Ａｓｓ’ｙ			
*	4	ZG889500	ARM ASSEMBLY L	CLP-525PE	腕木Ａｓｓ’ｙＬ			
	4a	--	FELT	160 5 ADHESIVE TAP	フェルト	(WV36270)		
*	5	ZG889800	ARM ASSEMBLY R	CLP-525PE	腕木Ａｓｓ’ｙＲ			
	5a	--	FELT	160 5 ADHESIVE TAP	フェルト	(WV36270)		
*	6	ZH197400	GH3 GKS KEYBOARD	AI ONLY W KEY	ＧＨ３ＧＫＳ鍵盤			
	7	V851850R	RACK LEFT		ラック成形品（Ｌ）			02
	8	V851860R	RACK RIGHT		ラック成形品（Ｒ）			02
*	9	YF774A00	LOUD SPEAKER	6X12cm 4ohm 10W	スピーカ		2	
	10	--	KEY BLOCK ASSEMBLY L		拍子木Ａｓｓ’ｙＬ	(ZG89560)		
	11	--	KEY BLOCK ASSEMBLY R		拍子木Ａｓｓ’ｙＲ	(ZG89570)		
*	12	ZG896100	TOP BOARD ASSEMBLY	CLP-525PE	屋根Ａｓｓ’ｙ			
	13	ZE111300	MUSIC REST ASSEMBLY		譜面板Ａｓｓ’ｙ			21
*	14	ZG978200	KEY COVER ASSEMBLY	CLP-525PE	スライド蓋Ａｓｓ’ｙ			
	15	ZE112800	STOPPER RAIL ASSEMBLY		鍵盤押さえＡｓｓ’ｙ			07
	15a	--	FELT		フェルト	(ZA69300)		
	15b	--	NONWOVEN FABLIC CLOT	X0.25	不織布	(V862270)	2	
	16	--	ANGLE ASSEMBLY		アングルＡｓｓ’ｙ	(WN64720)	3	
	17	ZE113000	USB-H ASSEMBLY	CL	ＵＳＢ－Ｈ Ａｓｓ’ｙ			06
	17a	--	CIRCUIT BOARD	USB	ＵＳＢシート	(ZE29920)		
	18	ZE113100	DCPJ ASSEMBLY	CL	ＤＣＰＪ Ａｓｓ’ｙ			07
	18a	--	CIRCUIT BOARD	DCPJ	ＤＣＰＪシート	(ZE29910)		
	19	ZF156900	JACK ASSEMBLY HP	CL	ＨＰジャックＡｓｓ’ｙ			06
	19a	--	CIRCUIT BOARD	HP	ＨＰシート	(ZF15680)		
*	20	ZH572400	CIRCUIT BOARD	DM	ＤＭシート			
	22	--	FELT	25X25X1 N5000NS	フェルト	(V591600)	4	
	23	--	FILAMENT TAPE	12X50	粘着テープ	(VP83460)		
	24	--	PHONES LABEL		ＰＨＯＮＥＳラベル	(VS47810)		
	25	--	EL ADHESIVE TAPE 0 40X20m	AL-40 40MMX20M	導電性粘着テープ	(WA53090)		
	26	--	DM ANGLE		ＤＭ金具	(ZG05420)	2	
	27	--	DM SHIELD ASSEMBLY		ＤＭシールドＡｓｓ’ｙ	(ZG14540)		
	30	--	WH COMMON ASSEMBLY		束線構成	(ZE29800)		
	S01	WF74150R	TRUSS HEAD SCREW	4.0X14 MFZN2B3	ＴＰ＃１＋ＴＲＵＳ		4	
	S02	WE995900	TRUSS HEAD SCREW	4.0X20 MFZN2W3	小ネジ＋ＴＲＵＳ		12	01
	S03	WF00150R	PAN HEAD SCREW	5.0X25 MFZN2W3	小ネジ＋ＰＡＮ		7	01
	S05	ZE721900	SCREW + WASHER	4.0X16 WASHD8T0.5	特殊ねじ＋平座金		3	01
	S11	WE971200	BIND HEAD TAPPING SCREW-1	3.0X16 MFZN2B3	ＴＰ＃１＋ＢＩＮＤ		4	
	S12	--	BIND HEAD TAPPING SCREW-1	3.5X11 MFZN2W3	ＴＰ＃１＋ＢＩＮＤ	(WF83110)	25	
	S13	--	BIND HEAD TAPPING SCREW-1	3.5X16 MFZN2W3	ＴＰ＃１＋ＢＩＮＤ	(WE97070)	4	
	S14	WE971500	BIND HEAD TAPPING SCREW-1	3.5X20 MFZN2W3	ＴＰ＃１＋ＢＩＮＤ		6	
	S15	--	TRUSS HEAD TAPPING SCREW-1	3.5X30 MFZN2W3	ＴＰ＃１＋ＴＲＵＳ	(WE97990)	9	
	S16	WE96570R	TRUSS HEAD TAPPING SCREW-1	4.0X16 MFZN2W3	ＴＰ＃１＋ＴＲＵＳ		8	01
	S17	WE97190R	BIND HEAD TAPPING SCREW-1	4.0X14 MFZN2W3	ＴＰ＃１＋ＢＩＮＤ		4	01
	S21	WF02860R	BIND HEAD TAPPING SCREW	3.0X6 MFZN2B3	Ｂタイト＋ＢＩＮＤ		3	01
	S22	WE97450R	BIND HEAD TAPPING SCREW-B	4.0X10 MFZN2W3	Ｂタイト＋ＢＩＮＤ		2	01
	S23	WE774300	BIND HEAD TAPPING SCREW-B	3.0X8 MFZN2W3	Ｂタイト＋ＢＩＮＤ		4	
			ACCESSORIES		付属品			
		--	COMPLETE ASSEMBLY BENCH	BC-108PE	同梱品セット椅子	U,Y,K,P,I,O (ZH47000)		
⚠		WU691400	AC ADAPTOR	PA-300C COMMON	ＡＣアダプター	U,E,B,K,P,I,O		13
⚠		ZC295100	POWER CORD	UC 2P 7A 2.44M	電源コードセット	U		05
⚠		V2917100	AC CORD SET	E 2P 2.5M 2.5A	電源コードセット	E,I		05
⚠		V3126501	POWER SUPPLY CORD	B 2P 2.5M	電源コードセット	B		
⚠	*	ZG891000	POWER SUPPLY CORDSET	K 2P 2.5A	電源コードセット	K		
⚠		WU795100	POWER SUPPLY CORD	BRA 2P 2.5M 2.5A	電源コードセット	P		06
⚠		WC90170R	AC CODE SET CHN	GB 2P 2.5M	電源コードセット	O		05

＊: New Parts（新規部品）

RANK : Japan only

REF NO.	PART NO.	DESCRIPTION		部品名	REMARKS	QTY	RANK
	WY678000	SCREW SET	CL	ネジセット	CLP-525B/CLP-525R/CLP-525PE		05
M6a	**WE969400**	BIND HEAD SCREW	6.0X16 MFZN2B3	小ネジ＋BIND		6	
M6b	**WE99770R**	TRUSS HEAD SCREW	4.0X12 MFZN2B3	小ネジ＋TRUS		2	01
M6c	**WF00130R**	TRUSS HEAD SCREW	6.0X20 MFZN2B3	小ネジ＋TRUS		4	01
M6d	**WE96530R**	TRUSS HEAD TAPPING SCREW	4.0X20 MFZN2B3	TP#1＋TRUS		4	01
M6e	**VR41030R**	CORD CLAMP SET(2pcs 1set)		コードクランプセット			03
M6ea	**VP59210R**	CORD CLAMPER DKN-5B(VHB)	DKN-5(VHB)	NKクランプ		2	03
M6ea	**WB090800**	CORD CLAMPER	OD-5	CSクランプ		2	01
	--	HEADPHONE HANGER SET	CL	ヘッドホンハンガーセット	(V874060)		
M10a	**V897260R**	HEADPHONE HANGER		ヘッドホンハンガー			04
M10b	**WF00080R**	TRUSS HEAD SCREW	4.0X10 MFZN2B3	小ネジ＋TRUS		2	01
	--	WH COMMON ASSEMBLY		束線構成	CLP-525B/CLP-525R/CLP-525PE (ZE29800)		
W1	**--**	CONNECTOR ASSEMBLY KB	KB PH7P L=500	KB束線	(WF42620)		
W2	**--**	CONNECTOR ASSEMBLY HP	HP PH7P L=950	HP束線	(ZD98810)		
W2a	**--**	FERRITE CORE	K1 NFT-13BK2	データラインフィルタ	(V312290)		
W3	**--**	CONNECTOR ASSEMBLY PDERP	PDERP PH8P L=90	PDERP束線	(ZE69250)		
W4	**--**	CONNECTOR ASSEMBLY DC	DC VH2P L=100	DC束線	(ZD98820)		
W5	**--**	CONNECTOR ASSEMBLY SP	SP VH4P L=700	SP束線	(ZD98830)		
W7	**--**	CONNECTOR ASSEMBLY USB	USB PH5P L=700	USB束線	(ZF30770)		
W7a	**--**	FERRITE CORE	K1 NFT-13BK2	データラインフィルタ	(V312290)		
W8	**--**	CONNECTOR ASSEMBLY GND	GND PH3P L=60	GND線	(ZF38590)		

＊: New Parts（新規部品）

RANK : Japan only

■ FRONT RAIL ASSEMBLY

● **Rear view**

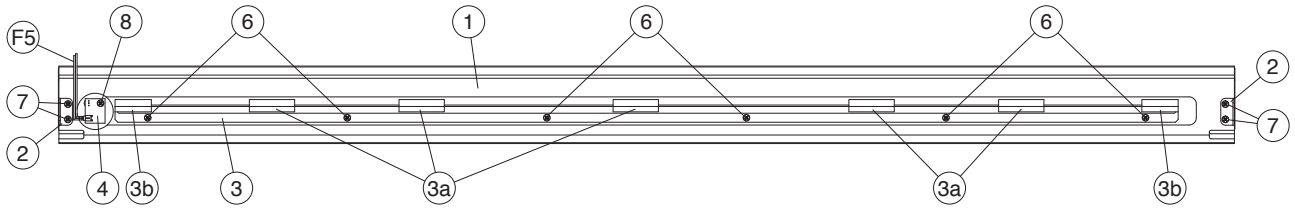

● **Left side view**

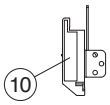

CLP-525PE: Not installed

● **Right side view**

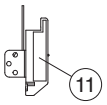

CLP-525PE: Not installed

● **Bottom view**

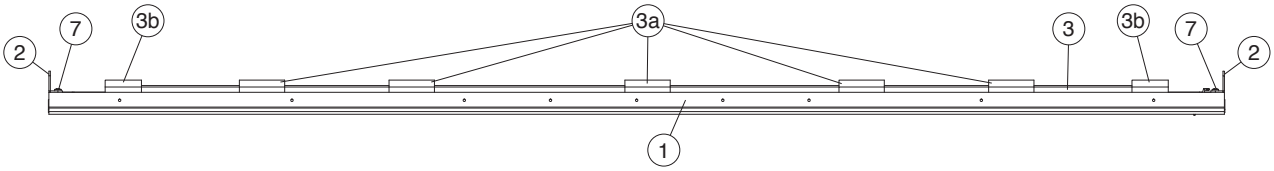

	REF NO.	PART NO.	DESCRIPTION		部品名	REMARKS	QTY	RANK
			FRONT RAIL ASSEMBLY		口棒Ass'y	CLP-525B/CLP-525R/CLP-525PE		
*		**ZH641200**	FRONT RAIL ASSEMBLY	CLP-525B	口棒Ass'y	CLP-525B		
*		**ZH641100**	FRONT RAIL ASSEMBLY		口棒Ass'y	CLP-525R		
*		**ZH641300**	FRONT RAIL ASSEMBLY	CLP-525PE	口棒Ass'y	CLP-525PE		
	1	--	FRONT RAIL		口棒	CLP-525B (ZD28960)		
	1	--	FRONT RAIL		口棒	CLP-525R (ZD28950)		
	1	--	FRONT RAIL FINISHED		口棒塗装品	CLP-525PE (ZD28980)		
	2	--	ANGLE (K) 1.6	L	アングル K	(V526350)	2	
	3	--	KEYBOARD RAIL ASSEMBLY	CL	鍵盤前金具Ass'y	(WC70660)		
	3a	--	KEYBOARD CUSHION	ON LE-20 T6X50X18	鍵盤クッションL	(V402100)	5	
	3b	--	KEYBOARD CUSHION S	T6X40X18	鍵盤クッションS	(V402110)	2	
	4	**VU65910R**	CIRCUIT BOARD	PL	PLシート			03
	F5	--	CONNECTOR ASSEMBLY PL	PL PH2P L=270	PL束線	(ZH57280)		
	6	--	BIND HEAD TAPPING SCREW-1	3.5X11 MFZN2W3	TP#1+BIND	(WF83110)	6	
	7	--	BIND HEAD TAPPING SCREW-1	3.5X16 MFZN2W3	TP#1+BIND	(WE97070)	4	
	8	**WE971300**	BIND HEAD TAPPING SCREW1	3.5X10 MFZN2B3	TP#1+BIND			
	10	--	SPACER(L)	67X14X0.5	スペーサーL	CLP-525B/CLP-525R (WZ37060)		
	11	--	SPACER(R)	67X14X0.5	スペーサーR	CLP-525B/CLP-525R (WZ51050)		

＊: New Parts（新規部品）

RANK : Japan only

■ MUSIC REST ASSEMBLY

● **Rear view**

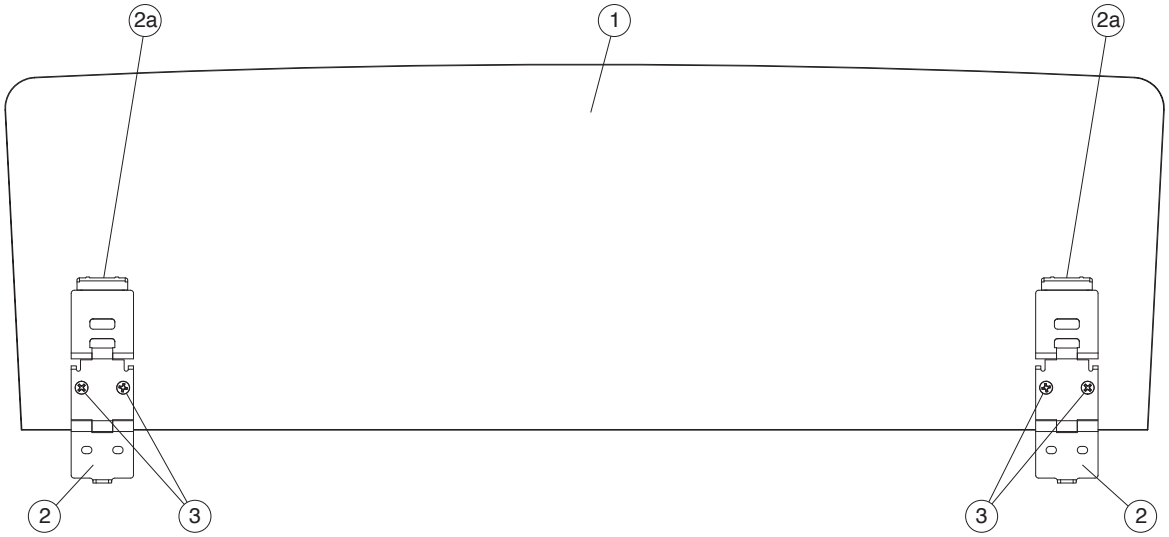

	REF NO.	PART NO.	DESCRIPTION		部品名	REMARKS	QTY	RANK
			MUSIC REST ASSEMBLY		譜面板Ass'y	CLP-525B/CLP-525R/CLP-525PE		
*		**ZG896700**	MUSIC REST ASSEMBLY	CLP-525B	譜面板Ass'y	CLP-525B		
*		**ZG896600**	MUSIC REST ASSEMBLY	CLP-525R	譜面板Ass'y	CLP-525R		
		ZE111300	MUSIC REST ASSEMBLY		譜面板Ass'y	CLP-525PE		21
	1	**--**	MUSIC REST	CLP-525B	譜面板	CLP-525B (ZG90580)		
	1	**--**	MUSIC REST	CLP-525R	譜面板	CLP-525R (ZG90570)		
	1	**--**	MUSIC REST FINISHED		譜面板塗装品	CLP-525PE (ZD42500)		
	2	**WU480200**	HINGE ASSEMBLY, MUSIC	CL	譜面蝶番Ass'y		2	04
	2a	**VV96590R**	CAP		蝶番キャップ			03
	3	**WF10940R**	BIND HEAD TAPPING SCREW-1	3.0X10 MFZN2B3	TP#1+BIND		4	01

＊: New Parts（新規部品）

RANK : Japan only

■ TOP BOARD ASSEMBLY

● **Top view**

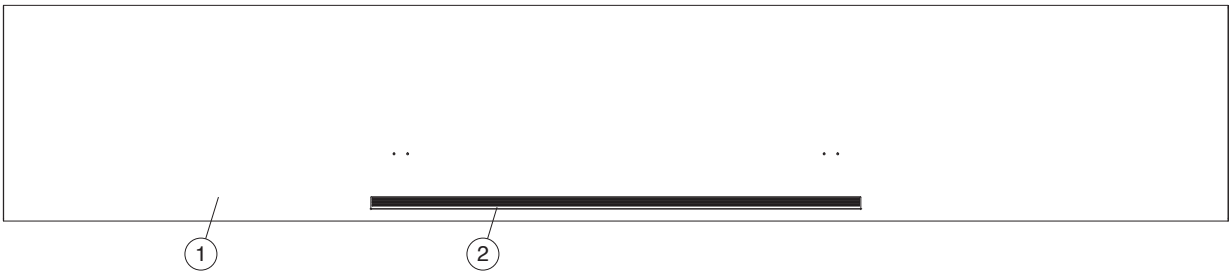

● **Front view**



● **Bottom view**

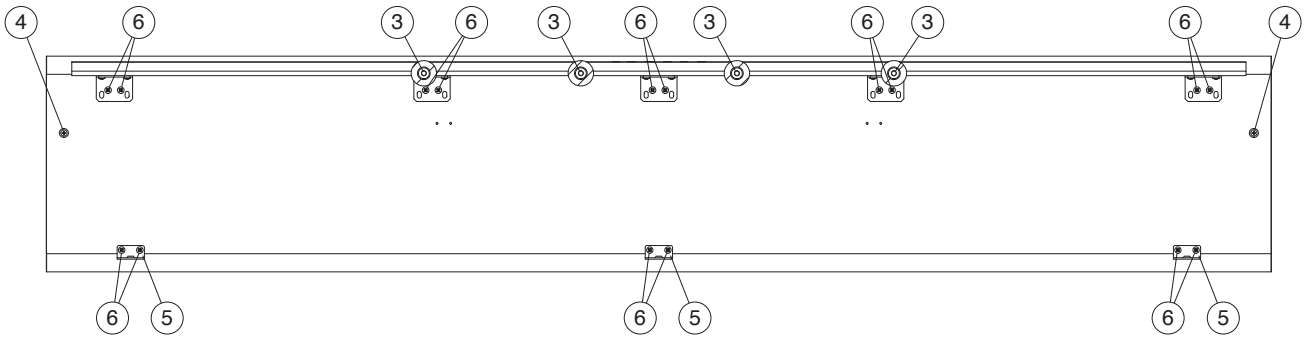

7 FRONT PANEL ASSEMBLY

● **Front view**



● **Rear view**

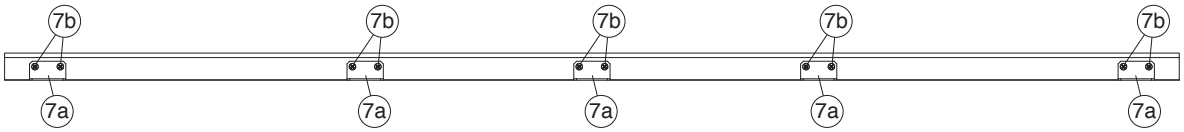

	REF NO.	PART NO.	DESCRIPTION		部品名	REMARKS	QTY	RANK
			TOP BOARD ASSEMBLY		屋根Ａｓｓ’ｙ	CLP-525B/CLP-525R/CLP-525PE		
*		**ZG896000**	TOP BOARD ASSEMBLY	CLP-525B	屋根Ａｓｓ’ｙ	CLP-525B		
*		**ZG895900**	TOP BOARD ASSEMBLY	CLP-525R	屋根Ａｓｓ’ｙ	CLP-525R		
*		**ZG896100**	TOP BOARD ASSEMBLY	CLP-525PE	屋根Ａｓｓ’ｙ	CLP-525PE		
	1	--	TOP BOARD	CLP-525B	屋根	CLP-525B (ZG84000)		
	1	--	TOP BOARD		屋根	CLP-525R (ZG83990)		
	1	--	TOP BOARD FINISHED		屋根塗装品	CLP-525PE (ZG84090)		
	2	**WY799900**	MUSIC STOP RAIL ASSEMBLY	BLACK	譜面止レールＡｓｓ’ｙ			02
	2a	--	CLOTH	11X8X0.35	不織布	(V278050)	2	
	3	**WY874100**	BIND HEAD TAP-B	3.0X10 MFZN2W3 PWH	Ｂタイト＋ＢＩＮＤ		4	01
	4	**ZF760800**	SHOULDER SCREW		ショルダースクリュー		2	
	5	--	HOLDER, BACK BOARD		裏板取付金具	(VQ95830)	3	
	6	--	BIND HEAD TAPPING SCREW-1	3.5X11 MFZN2W3	ＴＰ＃１＋ＢＩＮＤ	(WF83110)	16	
	7	--	FRONT PANEL ASSEMBLY	CLP-525B	屋根前板Ａｓｓ’ｙ	CLP-525B (ZG89880)		
	7	--	FRONT PANEL ASSEMBLY		屋根前板Ａｓｓ’ｙ	CLP-525R (ZG89870)		
	7	--	FRONT PANEL ASSEMBLY	CLP-525PE	屋根前板Ａｓｓ’ｙ	CLP-525PE (ZG89890)		
	7a	--	L ANGLE EH		Ｌアングル ＥＨ	(WV58100)	5	
	7b	--	BIND HEAD TAPPING SCREW-1	3.5X11 MFZN2W3	ＴＰ＃１＋ＢＩＮＤ	(WF83110)	10	

＊: New Parts（新規部品）

RANK : Japan only

■ BACK TOP RAIL ASSEMBLY

● **Rear view**

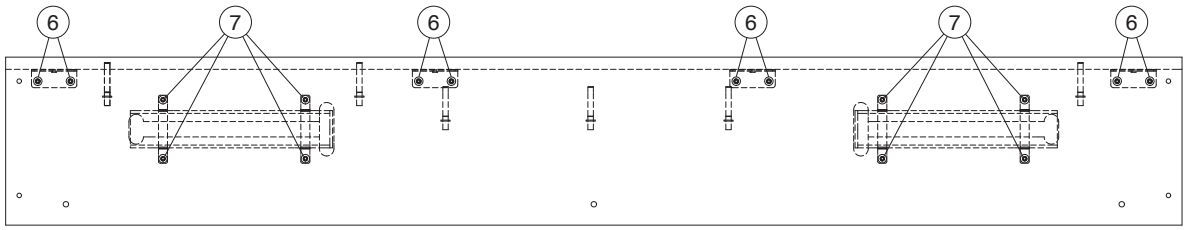

● **Front view**

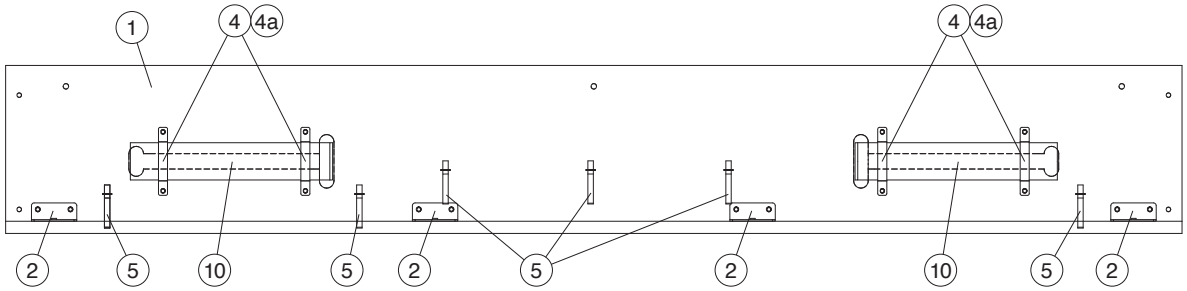

	REF NO.	PART NO.	DESCRIPTION		部品名	REMARKS	QTY	RANK
			BACK TOP RAIL ASSEMBLY		背面框Ass'y	CLP-525B/CLP-525R/CLP-525PE		
*		**ZG889000**	BACK TOP RAIL ASSEMBLY		背面框Ass'y			
	1	**--**	BACK TOP RAIL		背面框	(ZG90330)		
	2	**--**	BACK TOP RAIL ANGLE		背面框アングル	(WV58110)	4	
	4	**--**	PAD ANGLE ASSEMBLY		PAD金具Ass'y	(ZE11730)	4	
	4a	**--**	CUSHION PE	80X10X2	クッションPE	(ZE32140)		
	5	**--**	CORD BINDER	L80	ビニタイ黒1.0芯L	(VU89130)		
	6	**WF74150R**	TRUSS HEAD SCREW	4.0X14 MFZN2B3	TP#1+TRUS		8	
	7	**ZE332800**	TP #B +TRUS	4.0X16 MFZN2B3	Bタイト+TRUS		8	01
	10	**ZE299400**	AD RESONATOR(SPONGE)	CL #3371,	AD共鳴器スポンジ付		2	03

＊: New Parts（新規部品）

RANK : Japan only

■ KEY COVER ASSEMBLY

● **Bottom view**

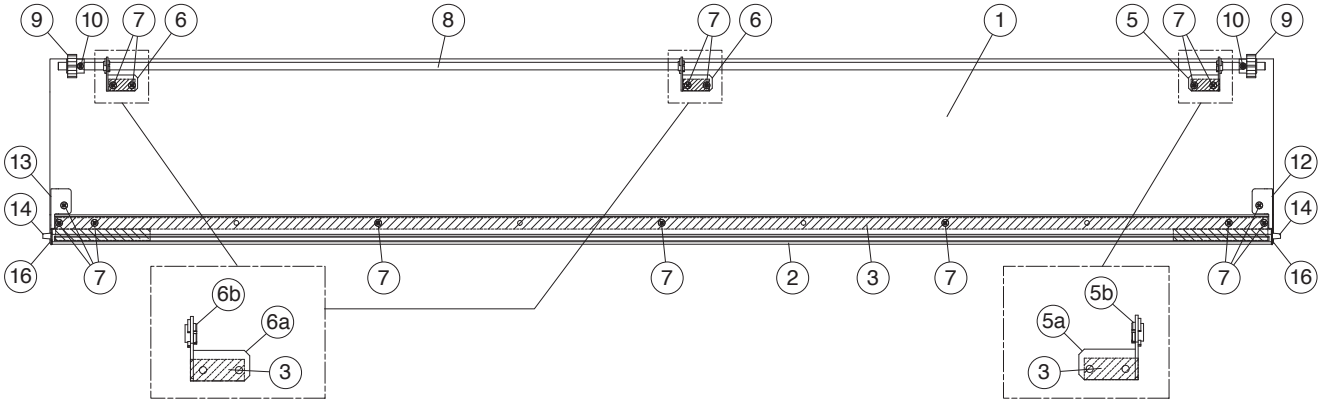

● **Top view**

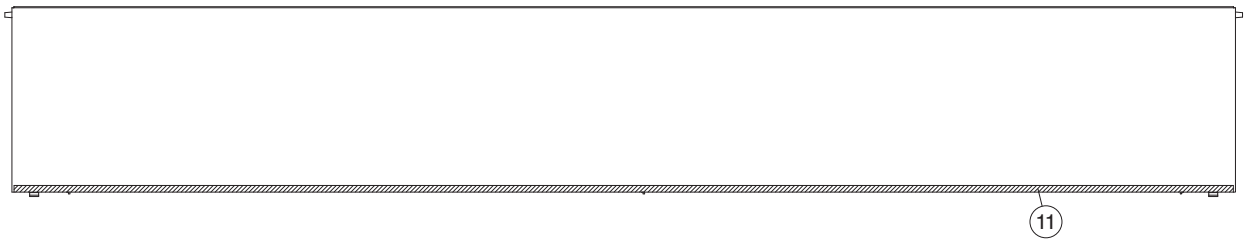

● **Side view**

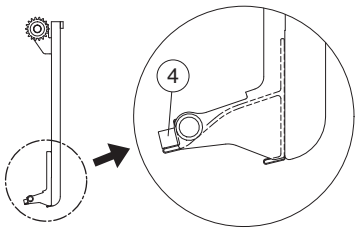

	REF NO.	PART NO.	DESCRIPTION		部品名	REMARKS	QTY	RANK
			KEY COVER ASSEMBLY		スライド蓋Ａｓｓ’ｙ	CLP-525B/CLP-525R/CLP-525PE		
*		**ZG978100**	KEY COVER ASSEMBLY	CLP-525B	スライド蓋Ａｓｓ’ｙ	CLP-525B		
*		**ZG978000**	KEY COVER ASSEMBLY	CLP-525R	スライド蓋Ａｓｓ’ｙ	CLP-525R		
*		**ZG978200**	KEY COVER ASSEMBLY	CLP-525PE	スライド蓋Ａｓｓ’ｙ	CLP-525PE		
	1	--	KEY COVER		スライド蓋	CLP-525B (ZD68650)		
	1	--	KEY COVER		スライド蓋	CLP-525R (ZD68640)		
	1	--	KEY COVER		スライド蓋塗装品	CLP-525PE (ZD76070)		
	2	--	SASH F09	BLACK(YK1)	サッシＦ０９	(ZG97760)		
	3	--	TAPE	#500 W=12	粘着テープ	(VE36310)		
	4	--	SASH CUSHION		サッシクッション	(WS28700)		
	5	--	SUPPORTING HOLDER ASSEMBLY		支持金具Ａｓｓ’ｙ（Ｌ）	(V890140)		
	5a	--	HOLDER, ROD L		連動棒支持金具Ｌ	(VV28560)		
	5b	**VS368501**	BUSH YDP-181		ブッシュ			01
	6	--	SUPPORTING HOLDER ASSEMBLY		支持金具Ａｓｓ’ｙ（Ｒ）	(V890150)	2	
	6a	--	HOLDER, ROD R		連動棒支持金具Ｒ	(VV28570)		
	6b	**VS368501**	BUSH YDP-181		ブッシュ			01
	7	**WF74530R**	BIND HEAD TAPPING SCREW-1	3.5X8 MFZN2W3	ＴＰ＃１＋ＢＩＮＤ		15	01
	8	--	KEY COVER ROD		連動棒	(V851700)		
	9	**V985790R**	SLIDE COVER GEAR	M90S	ピニオンギヤ		2	01
	10	**WE95290R**	BIND HEAD SCREW	3.0X10 MFZN2W3	小ネジ＋ＢＩＮＤ		2	01
	11	--	FELT	1290 7 ADHESIVE TA	フェルト	(ZE11270)		
*	12	**ZJ107200**	SASH COVER L		サッシカバーＬ			
*	13	**ZJ107300**	SASH COVER R		サッシカバーＲ			
	14	--	GUIDE PIN L8.5	3.0X12 TP #B	ガイドピンＬ８．５	(ZE75140)	2	
	16	**ZD253200**	SPACER GUIDE PIN	T=1.25	ガイドピンスペーサ	CLP-525PE	2	07

＊: New Parts（新規部品）

RANK : Japan only

■ SIDE BOARD ASSEMBLY

● Top view

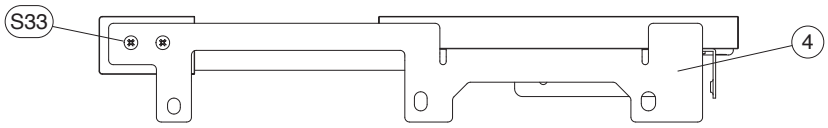

● Front view



● Side view

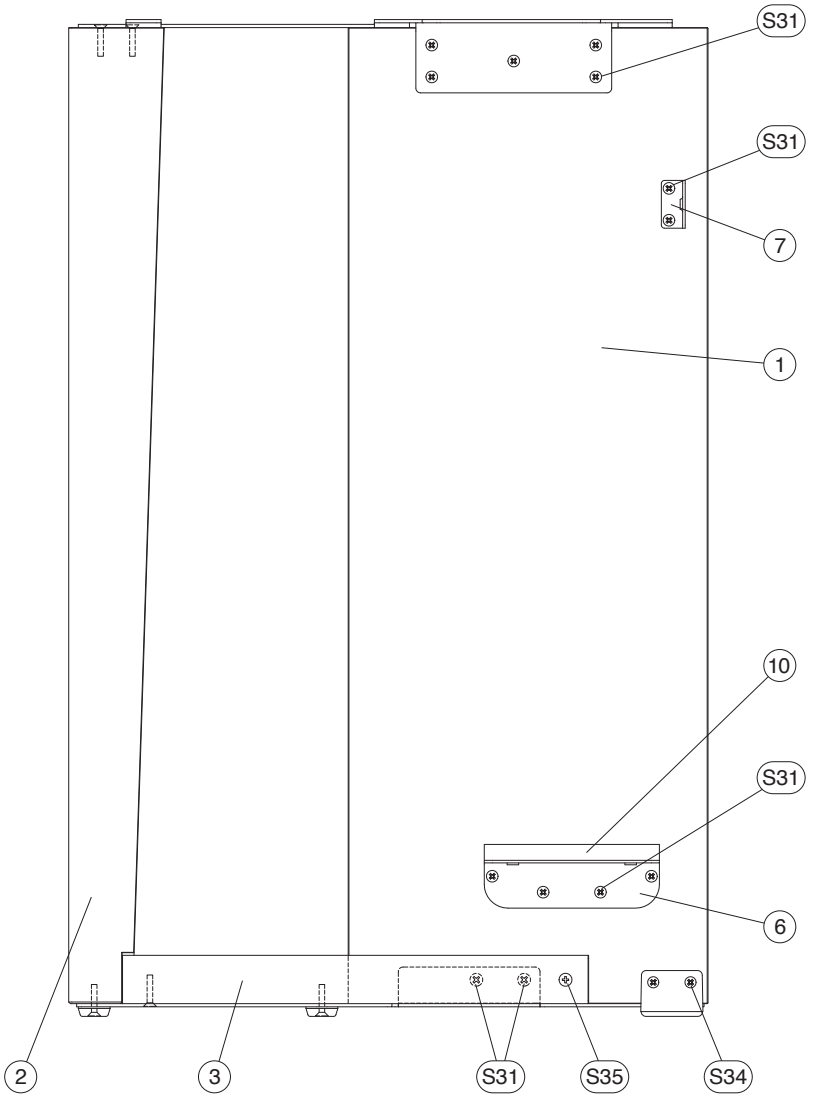

● Bottom view

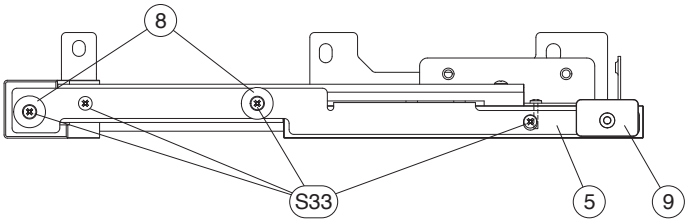

NOTE: This figure shows the side board assembly L.

	REF NO.	PART NO.	DESCRIPTION		部品名	REMARKS	QTY	RANK
			SIDE BOARD ASSEMBLY		側板Ass'y	CLP-525B/CLP-525R/CLP-525PE		
*		**ZG864700**	SIDE BOARD ASSEMBLY L	CLP-525B	側板Ass'y L	CLP-525B		
*		**ZG864600**	SIDE BOARD ASSEMBLY L	CLP-525R	側板Ass'y L	CLP-525R		
*		**ZG864800**	SIDE BOARD ASSEMBLY L	CLP-525PE	側板Ass'y L	CLP-525PE		
	1	**--**	SIDE BOARD L		側板 L	CLP-525B (ZG90630)		
	1	**--**	SIDE BOARD L		側板 L	CLP-525R (ZG90620)		
	1	**--**	SIDE BOARD L FINISHED		側板L塗装品	CLP-525PE (ZG90150)		
*	2	**ZG906700**	FRONT LEG L		脚柱 L	CLP-525B		
*	2	**ZG906600**	FRONT LEG L		脚柱 L	CLP-525R		
*	2	**ZG901900**	FRONT LEG L FINISHED		脚柱L塗装品	CLP-525PE		
*	3	**ZG907200**	FRONT LEG STAY L		脚柱ステー L	CLP-525B		
*	3	**ZG907100**	FRONT LEG STAY L		脚柱ステー L	CLP-525R		
*	3	**ZG907300**	FRONT LEG STAY L		脚柱ステー L	CLP-525PE		
	4	**--**	SIDE BOARD ANGLE L		側板金具 L	(ZG91800)		
	5	**--**	FRONT LEG ANGLE L		脚柱ステー金具 L	(ZG91820)		
	6	**--**	ANGLE BRACKET		PB金具	(V970350)		
	7	**--**	HOLDER, BACK BOARD		裏板取付金具	(VQ95830)		
	8	**CB012091**	SLIP FITTING		滑り座		2	01
	9	**VR930700**	FOOT		スベリ座			01
	10	**WP089500**	SPACER	10X110X0.5	スペーサー			03
	S31	**WE95510R**	BIND HEAD TAPPING SCREW-1	3.5X16 MFZN2B3	TP#1+BIND		13	01
	S33	**WE970000**	FLAT HEAD TAPPING SCREW-1	4.0X20 MFZN2B3	TP#1+FLAT		6	
	S34	**WE963900**	FLAT HEAD TAPPING SCREW-1	3.5X16 MFZN2B3	TP#1+FLAT		2	01
	S35	**WE97020R**	TRUSS HEAD TAPPING SCREW-1	3.5X25 MFZN2W3	TP#1+TRUS			01
*		**ZG865000**	SIDE BOARD ASSEMBLY R	CLP-525B	側板Ass'y R	CLP-525B		
*		**ZG864900**	SIDE BOARD ASSEMBLY R	CLP-525R	側板Ass'y R	CLP-525R		
*		**ZG865100**	SIDE BOARD ASSEMBLY R	CLP-525PE	側板Ass'y R	CLP-525PE		
	1	**--**	SIDE BOARD R		側板 R	CLP-525B (ZG90650)		
	1	**--**	SIDE BOARD R		側板 R	CLP-525R (ZG90640)		
	1	**--**	SIDE BOARD R FINISHED		側板R塗装品	CLP-525PE (ZG90160)		
*	2	**ZG906900**	FRONT LEG R		脚柱 R	CLP-525B		
*	2	**ZG906800**	FRONT LEG R		脚柱 R	CLP-525R		
*	2	**ZG902000**	FRONT LEG R FINISHED		脚柱R塗装品	CLP-525PE		
*	3	**ZG907500**	FRONT LEG STAY R		脚柱ステー R	CLP-525B		
*	3	**ZG907400**	FRONT LEG STAY R		脚柱ステー R	CLP-525R		
*	3	**ZG907600**	FRONT LEG STAY R		脚柱ステー R	CLP-525PE		
	4	**--**	SIDE BOARD ANGLE R		側板金具 R	(ZG91810)		
	5	**--**	FRONT LEG ANGLE R		脚柱ステー金具 R	(ZG91830)		
	6	**--**	ANGLE BRACKET		PB金具	(V970350)		
	7	**--**	HOLDER, BACK BOARD		裏板取付金具	(VQ95830)		
	8	**CB012091**	SLIP FITTING		滑り座		2	01
	9	**VR930700**	FOOT		スベリ座			01
	10	**WP089500**	SPACER	10X110X0.5	スペーサー			03
	S31	**WE95510R**	BIND HEAD TAPPING SCREW-1	3.5X16 MFZN2B3	TP#1+BIND		13	01
	S33	**WE970000**	FLAT HEAD TAPPING SCREW-1	4.0X20 MFZN2B3	TP#1+FLAT		6	
	S34	**WE963900**	FLAT HEAD TAPPING SCREW-1	3.5X16 MFZN2B3	TP#1+FLAT		2	01
	S35	**WE97020R**	TRUSS HEAD TAPPING SCREW-1	3.5X25 MFZN2W3	TP#1+TRUS			01

＊: New Parts（新規部品）

RANK : Japan only

■ KEYBLOCK ASSEMBLY L

● Top view

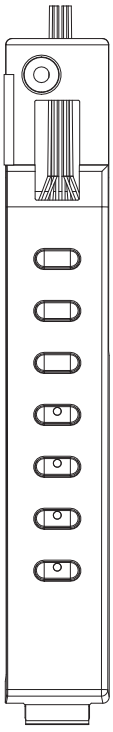

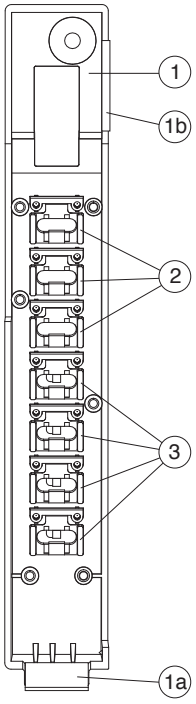

● Bottom view

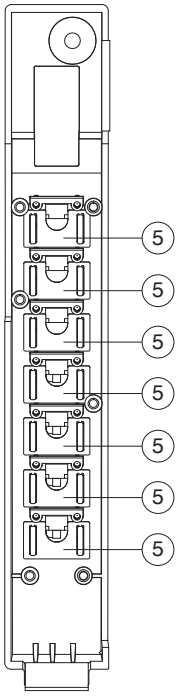

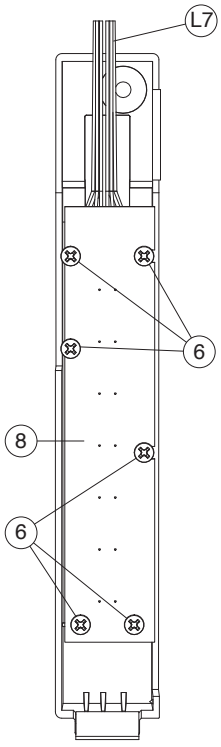

REF NO.	PART NO.	DESCRIPTION		部品名	REMARKS	QTY	RANK
		KEY BLOCK ASSEMBLY L		拍子木Ａｓｓ’ｙ Ｌ	CLP-525B/CLP-525R/CLP-525PE		
	--	KEY BLOCK ASSEMBLY L		拍子木Ａｓｓ’ｙ Ｌ	(ZG89560)		
* 1	**ZH190700**	KEY BLOCK L SUB ASSEMBLY		拍子木Ｌサブ Ａｓｓ’ｙ			
1a	--	FELT	20 15	フ ェ ル ト	(WN15920)		
1b	--	NONWOVEN_F_CLOTH	28X10X0.55	不 織 布	(WD26380)		
2	**WM312700**	BUTTON(B)1		ボタン（Ｂ１ブラック）	DEMO/SONG,PIANO/VOICE, MOTRONOME	3	01
3	**WM312600**	BUTTON(B)	3	ボ タ ン Ｂ ブ ラ ッ ク	+/R,-/L,REC,PLAY	4	01
5	--	NONWOVEN FABLIC CLOT		不 織 布	(V926650)	7	
6	**WE774300**	BIND HEAD TAPPING SCREW-B	3.0X8 MFZN2W3	Ｂ タ イ ト ＋ Ｂ Ｉ Ｎ Ｄ		6	
L7	--	CONNECTOR ASSEMBLY PNL	PNL PH12P L=750	Ｐ Ｎ Ｌ 束 線	(ZD98780)		
8	**ZA500400**	CIRCUIT BOARD	PNL	Ｐ Ｎ Ｌ シ ー ト			08

＊: New Parts（新規部品）

RANK : Japan only

■ KEYBLOCK ASSEMBLY R

● Top view ● Side view ● Bottom view

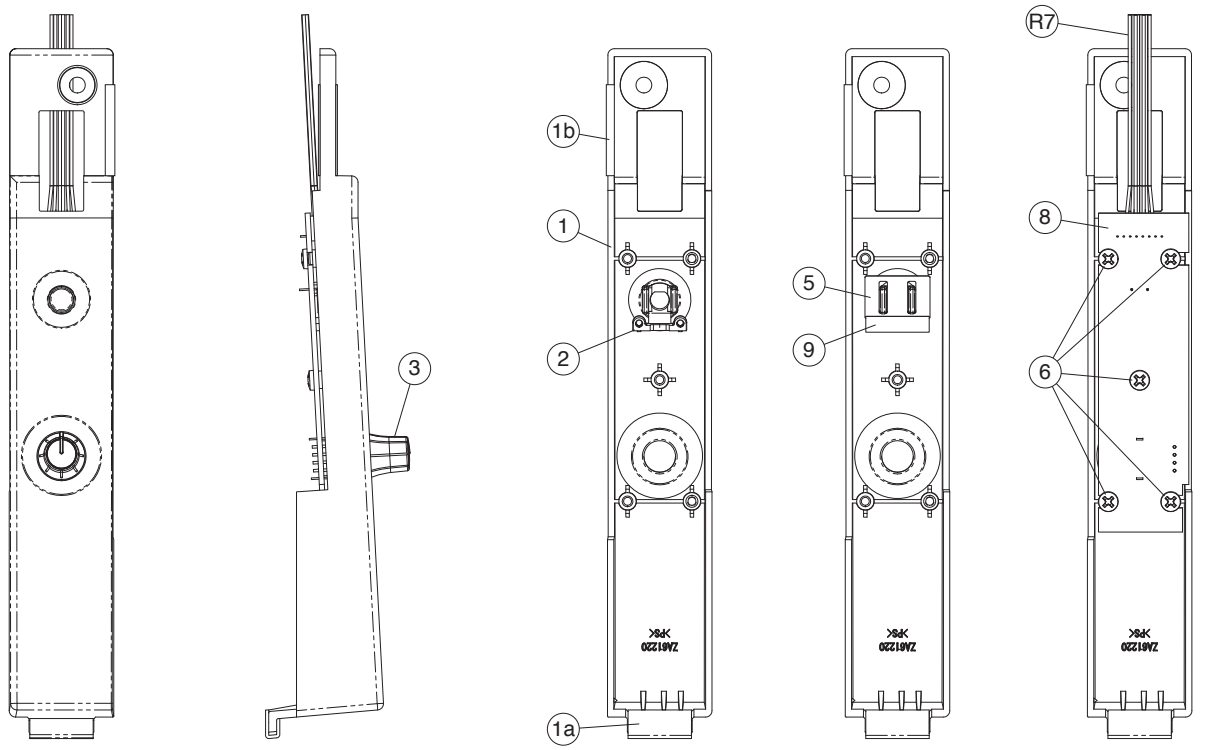

REF NO.	PART NO.	DESCRIPTION		部品名	REMARKS	QTY	RANK
		KEY BLOCK ASSEMBLY R		拍子木Ａｓｓ’ｙ Ｒ	CLP-525B/CLP-525R/CLP-525PE		
	--	KEY BLOCK ASSEMBLY R		拍子木Ａｓｓ’ｙ Ｒ	(ZG89570)		
* 1	**ZH190800**	KEY BLOCK R SUB ASSEMBLY		拍子木Ｒサブ Ａｓｓ’ｙ			
1a	--	FELT	20 15	フェルト	(WN15920)		
1b	--	NONWOVEN_F_CLOTH	28X10X0.55	不織布	(WD26380)		
2	**WM860400**	BUTTON(D) BLACK x1	CL	ボタン Ｄ 黒	STANDBY/ON		01
3	**WY115600**	KNOB GAIN GRAY		ノブ Ｇ Ａ Ｉ Ｎ	MASTER VOLUME		01
5	--	NONWOVEN 25		不織布 ２５	(WE09470)		
6	**WE774300**	BIND HEAD TAPPING SCREW-B	3.0X8 MFZN2W3	Ｂタイト＋ＢＩＮＤ		5	
R7	--	CONNECTOR ASSEMBLY PNR	PNR PH3P L=1110	ＰＮＲ束線	(ZD98790)		
8	**ZA500500**	CIRCUIT BOARD	PNR	ＰＮＲシート			08
9	--	NONWOVEN CLOTH	20X5X0.15T	不織布	(WV34140)		

＊: New Parts（新規部品）

RANK : Japan only

■ KEYBOARD ASSEMBLY

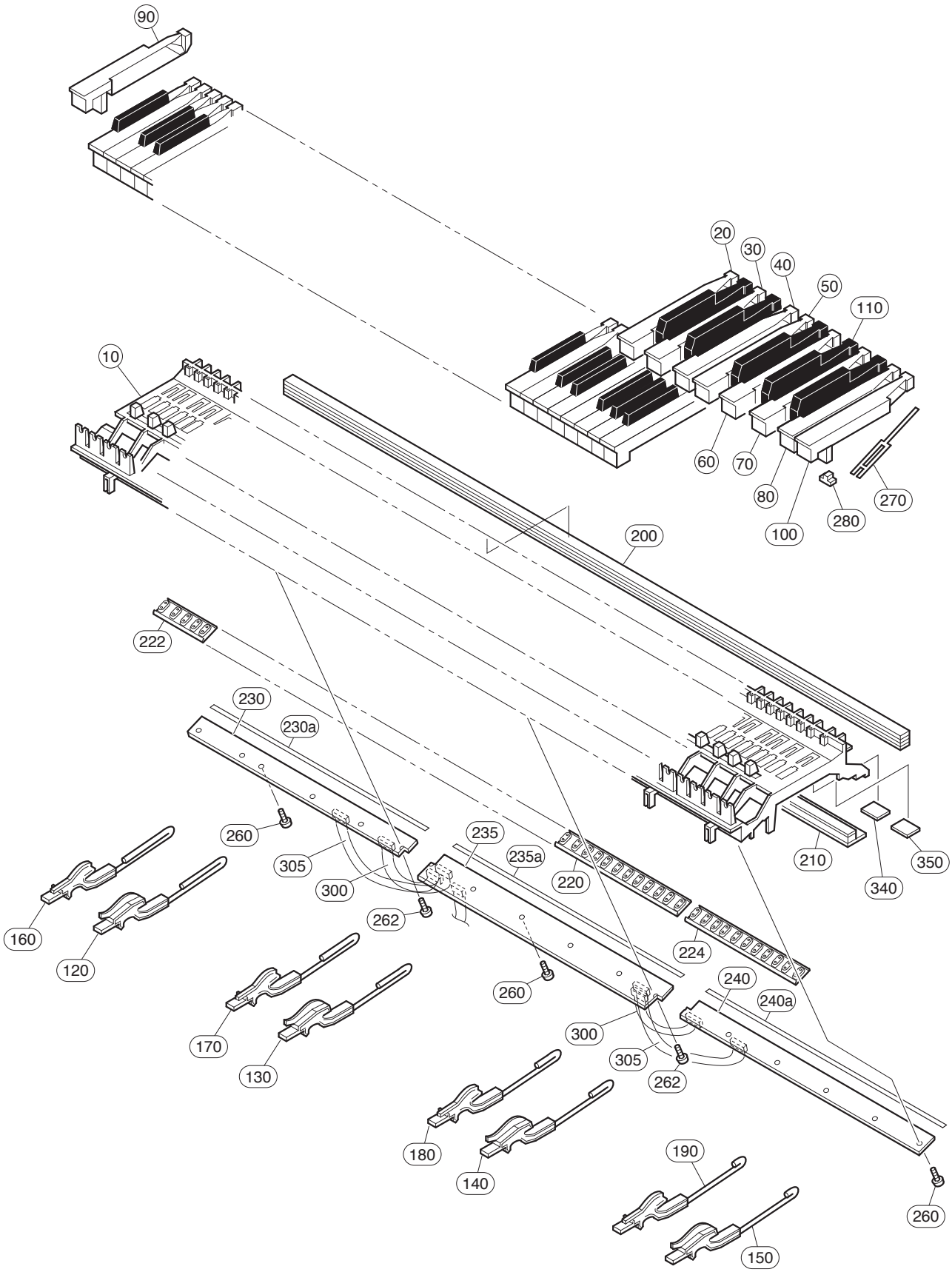

	REF NO.	PART NO.	DESCRIPTION		部品名	REMARKS	QTY	RANK
			KEYBOARD ASSEMBLY		GH3 GKS 鍵盤	CLP-525B/CLP-525R/CLP-525PE		
*		**ZH197400**	GH3 GKS KEYBOARD	AI ONLY W KEY	GH3 GKS 鍵盤			
	10	**--**	KEYBOARD FRAME OUT	-ESC	フレーム88アウトサート	(ZH19720)		
*	20	**ZH194400**	WHITE KEY C AI	-ESC	白鍵C人工象牙		7	
*	30	**ZH194500**	WHITE KEY D AI	-ESC	白鍵D人工象牙		7	
*	40	**ZH194600**	WHITE KEY E AI	-ESC	白鍵E人工象牙		7	
*	50	**ZH194700**	WHITE KEY F AI	-ESC	白鍵F人工象牙		7	
*	60	**ZH194900**	WHITE KEY G AI	-ESC	白鍵G人工象牙		7	
*	70	**ZH195100**	WHITE KEY A AI	-ESC	白鍵A人工象牙		7	
*	80	**ZH195200**	WHITE KEY B AI	-ESC	白鍵B人工象牙		8	
*	90	**ZH195400**	WHITE KEY A'AI	-ESC	白鍵A'人工象牙			
*	100	**ZH195300**	WHITE KEY C'AI	-ESC	白鍵C'人工象牙			
*	110	**ZH195600**	BLACK KEY	-ESC	黒鍵		36	
	120	**VY82850R**	HAMMER ASSEMBLY W1		ドーム用ハンマーW1		13	05
	120	**WK462100**	HAMMER ASSEMBLY, WHITE	W1	ドーム用ハンマーMV		13	01
	130	**VY82860R**	HAMMER ASSEMBLY W2		ドーム用ハンマーW2		13	05
	130	**WK462200**	HAMMER ASSEMBLY, WHITE	W2	ドーム用ハンマーMV		13	01
	140	**VY82870R**	HAMMER ASSEMBLY W3		ドーム用ハンマーW3		13	05
	140	**WK462400**	HAMMER ASSEMBLY, WHITE	W3	ドーム用ハンマーMV		13	01
	150	**VY82880R**	HAMMER ASSEMBLY W4		ドーム用ハンマーW4		13	05
	150	**WK462500**	HAMMER ASSEMBLY, WHITE	W4	ドーム用ハンマーMV		13	01
	160	**VY82890R**	HAMMER ASSEMBLY B1		ドーム用ハンマーB1		9	05
	160	**WK462600**	HAMMER ASSEMBLY, BLACK	B1	ドーム用ハンマーMV		9	01
	170	**VY82900R**	HAMMER ASSEMBLY B2		ドーム用ハンマーB2		9	05
	170	**WK462700**	HAMMER ASSEMBLY, BLACK	B2	ドーム用ハンマーMV		9	01
	180	**VY82910R**	HAMMER ASSEMBLY B3		ドーム用ハンマーB3		9	05
	180	**WK462800**	HAMMER ASSEMBLY, BLACK	B3	ドーム用ハンマーMV		9	01
	190	**VY82920R**	HAMMER ASSEMBLY B4		ドーム用ハンマーB4		9	05
	190	**WK462900**	HAMMER ASSEMBLY, BLACK	B4	ドーム用ハンマーMV		9	01
	200	**V8468201**	STOPPER U88_S		ストッパーU88_S			08
	210	**V7640100**	STOPPER	5X28X10.1T	ストッパーL88_W			07
	220	**V828660R**	RUBBER CONTACT 12KEYS	GH3 3M OCT	シーソードームD-C#	D0-C#1,D1-C#2,D2-C#3, D3-C#4,D4-C#5,D5-C#6	6	05
	222	**V828680R**	RUBBER CONTACT 5KEYS	GH3 3M OCT	シーソードームA-C#	A-1-C#0		06
	224	**V828670R**	RUBBER CONTACT 11KEYS	GH3 3M OCT	シーソードームD-C	D6-C7		06
	230	**WV760400**	CIRCUIT BOARD	MK-L	MK-Lシート			11
	230a	**--**	FELT CLOTH		不織布	(V846980)		
	235	**WV760500**	CIRCUIT BOARD	MK-M	MK-Mシート			11
	235a	**--**	FELT CLOTH		不織布	(V846990)		
	240	**WV760600**	CIRCUIT BOARD	MK-H	MK-Hシート			11
	240a	**--**	FELT CLOTH		不織布	(V847000)		
	260	**WF00100R**	BIND HEAD TAPPING SCREW-P	3.0X10 MFZN2W3	Pタイト+BIND		14	01
	262	**WF76550R**	PW Head Tapping Screw-P	3.0X10-10 MFZN2W3	Pタイト+PWH		2	01
	270	**V2798500**	SPRING	GH	スプリングR		88	01
	270	**VZ41790R**	SPRING	GH	スプリングR		88	
	280	**WJ027800**	ACTUATE RUBBER,NES	GH,GHD,HE,HED,NWK	駆動ラバーNES		88	01
	290	**V6274301**	GREASE	G-1006Y	グリス			09
	295	**WM498600**	GREASE_BLUE	G-1066Y 16KG	グリス青			
	300	**--**	WIRE HARNESS	12P L=98 P=2	ケーブル	(WV92590)	2	
	305	**--**	WIRING ASSEMBLY	11P L=176 P=2	ケーブル	(WV92600)	2	
	320	**--**	GREASE DRY	HANARL FL-78E	ハナール	(WR65030)		
	340	**VV467900**	STOPPER FELT A X	35.5 20 _	ストッパーサポートA		7	03
	350	**VV468100**	STOPPER FELT B X	24 20 -	ストッパーサポートB		12	03
			TOOL		工具			
		TX000671	ROD		ロッド		99	

* : New Parts (新規部品)

RANK : Japan only

■ PEDAL BOX ASSEMBLY

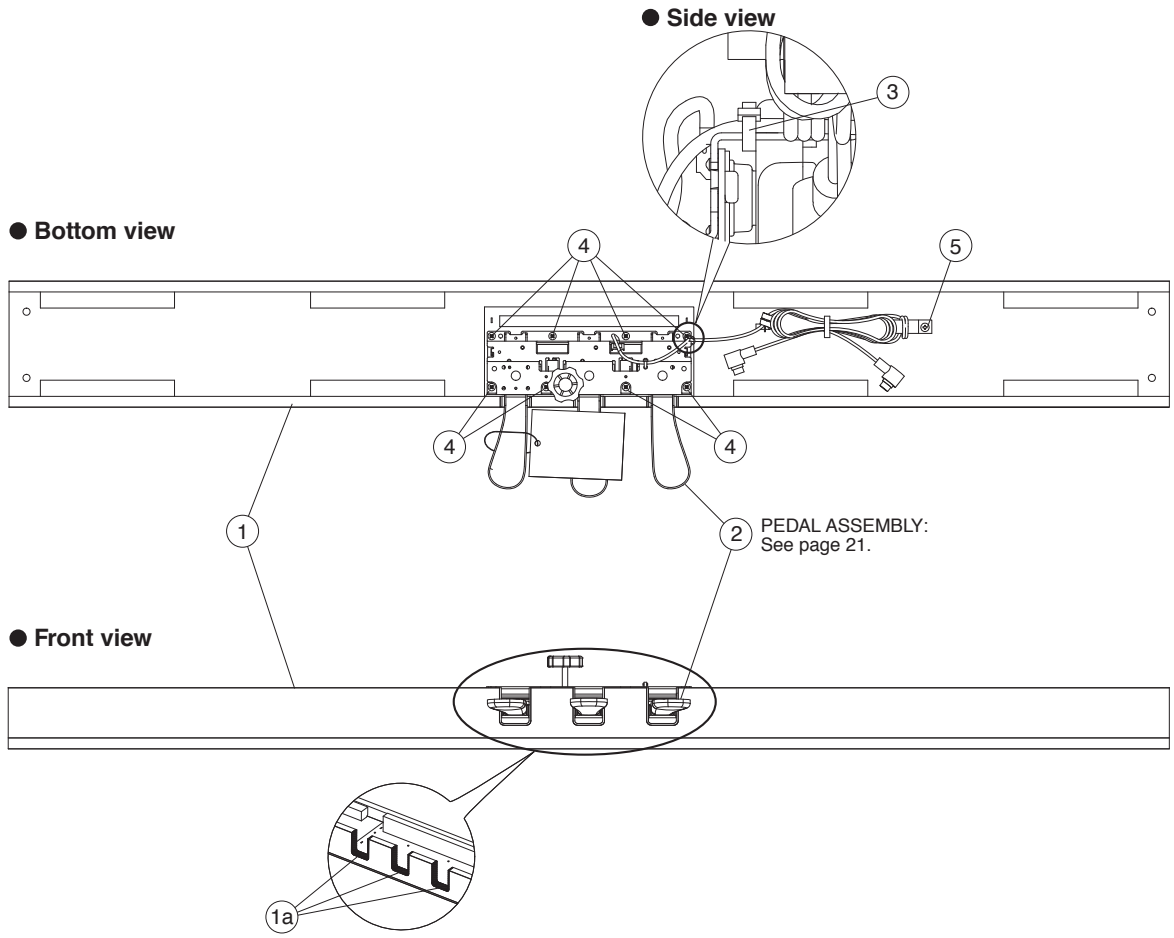

	REF NO.	PART NO.	DESCRIPTION		部品名	REMARKS	QTY	RANK
			PEDAL BOX ASSEMBLY		ペダルＢｏｘＡｓｓ’ｙ	CLP-525B/CLP-525R/CLP-525PE		
		--	PEDAL BOX ASSEMBLY	CLP-525B	ペダルＢＯＸＡｓｓ’ｙ	CLP-525B (ZG88380)		
		--	PEDAL BOX ASSEMBLY	CLP-525R	ペダルＢＯＸＡｓｓ’ｙ	CLP-525R (ZG88370)		
		--	PEDAL BOX ASSEMBLY	CLP-525PE	ペダルＢＯＸＡｓｓ’ｙ	CLP-525PE (ZG88390)		
*	1	**ZG898300**	PEDAL BOX SUB ASSEMBLY	CLP-525B	ペダルＢＯＸ木部集成	CLP-525B		
*	1	**ZG898200**	PEDAL BOX SUB ASSEMBLY	CLP-525R	ペダルＢＯＸ木部集成	CLP-525R		
*	1	**ZG898400**	PEDAL BOX SUB ASSEMBLY	CLP-525PE	ペダルＢＯＸ木部集成	CLP-525PE		
	1a	--	FELT		フェルト	(ZE28460)	3	
	2	**ZF286100**	PEDAL ASSEMBLY (R)		ペダルＡｓｓ’ｙ（Ｒ）	CLP-525B/CLP-525PE		14
	2	**ZF286000**	PEDAL ASSEMBLY (Q)		ペダルＡｓｓ’ｙ（Ｑ）	CLP-525R		14
	3	--	INSULOC TIE	BK-1 HELLERMANN TY	インシュロックタイ	(CB06925)		
	4	**WF744400**	BIND HEAD TAPPING SCREW-1	4.0X20 MFZN2W3	ＴＰ＃１＋ＢＩＮＤ		8	
	5	**WF745900**	TP#1+TRUS 14.0X12	4.0X12 MFZN2W3	ＴＰ＃１＋ＴＲＵＳ			01

＊: New Parts（新規部品）

RANK : Japan only

■ PEDAL ASSEMBLY (R) / PEDAL ASSEMBLY (Q)

● Top view 1

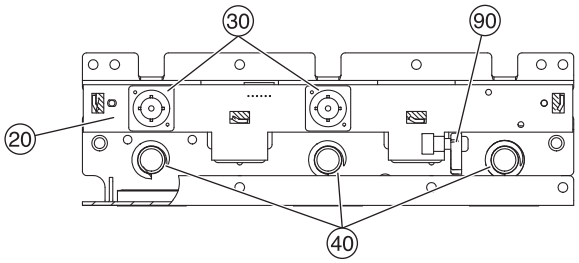

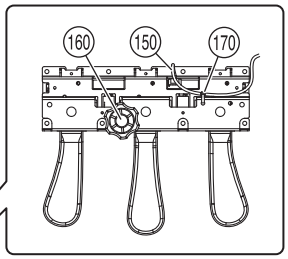

● Side view

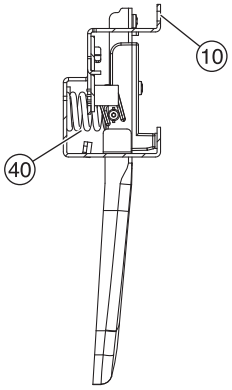

● Top view 2

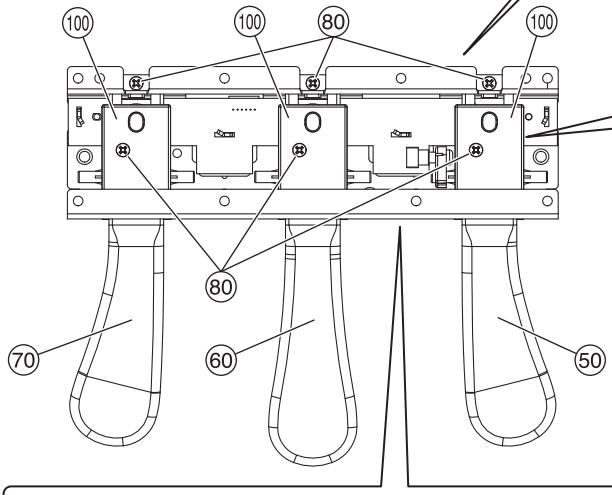

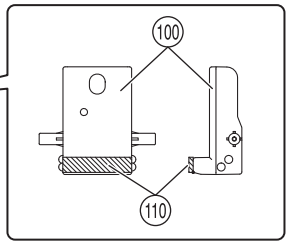

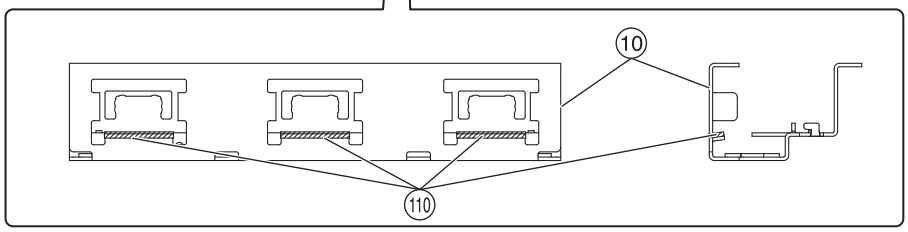

REF NO.	PART NO.	DESCRIPTION		部品名	REMARKS	QTY	RANK
		PEDAL ASSEMBLY		ペダルAss'y	CLP-525B/CLP-525R/CLP-525PE		
	ZF286100	PEDAL ASSEMBLY (R)		ペダルAss'y(R)	CLP-525B/CLP-525PE		14
	ZF286000	PEDAL ASSEMBLY (Q)		ペダルAss'y(Q)	CLP-525R		14
10	--	PEDAL FRAME		ペダルフレーム	(WS28650)		
20	WP029200	CIRCUIT BOARD	PEDAL	PEDALシート			05
30	VU456001	RUBBER CONTACT	1PC DOME PEDAL	接点ゴムドーム		2	
40	WP015700	PEDAL SPRING		ペダルばね		3	01
50	WU426700	PEDAL SET (R) RIGHT	CL	ペダルセット(R)	CLP-525B/CLP-525PE		06
50	WR038800	PEDAL SET (R) RIGHT	CL	ペダルセット(R)	CLP-525R		06
60	WU426600	PEDAL SET (C) CENTER	CL	ペダルセット(C)	CLP-525B/CLP-525PE		06
60	WR038600	PEDAL SET (C) CENTER	CL	ペダルセット(C)	CLP-525R		07
70	WU426800	PEDAL SET (L) LEFT	CL	ペダルセット(L)	CLP-525B/CLP-525PE		06
70	WR038700	PEDAL SET (L) LEFT	CL	ペダルセット(L)	CLP-525R		06
80	WE774300	BIND HEAD TAPPING SCREW-B	3.0X8 MFZN2W3	BタイトBIND		6	
90	WP016100	ACTUATOR PEDAL		アクチュエータペダル			03
100	WP016200	PEDAL GUIDE		ペダルガイド		3	05
110	WP016301	PEDAL FELT		ペダルフェルト		6	01
150	ZE761900	CONNECTOR ASSEMBLY		PKケーブルーLF			06
160	WF05450R	CUSTOM DESIGNED SCREW	40XM6X46 ADJUSTER	アジャスター			03
170	--	INSULOC TIE	BK-1 HELLERMANN TY	インシュロックタイ	(CB06925)		

＊: New Parts（新規部品）　　RANK : Japan only

■ BENCH (BC-108BK/BC-108DR/BC-108PE)

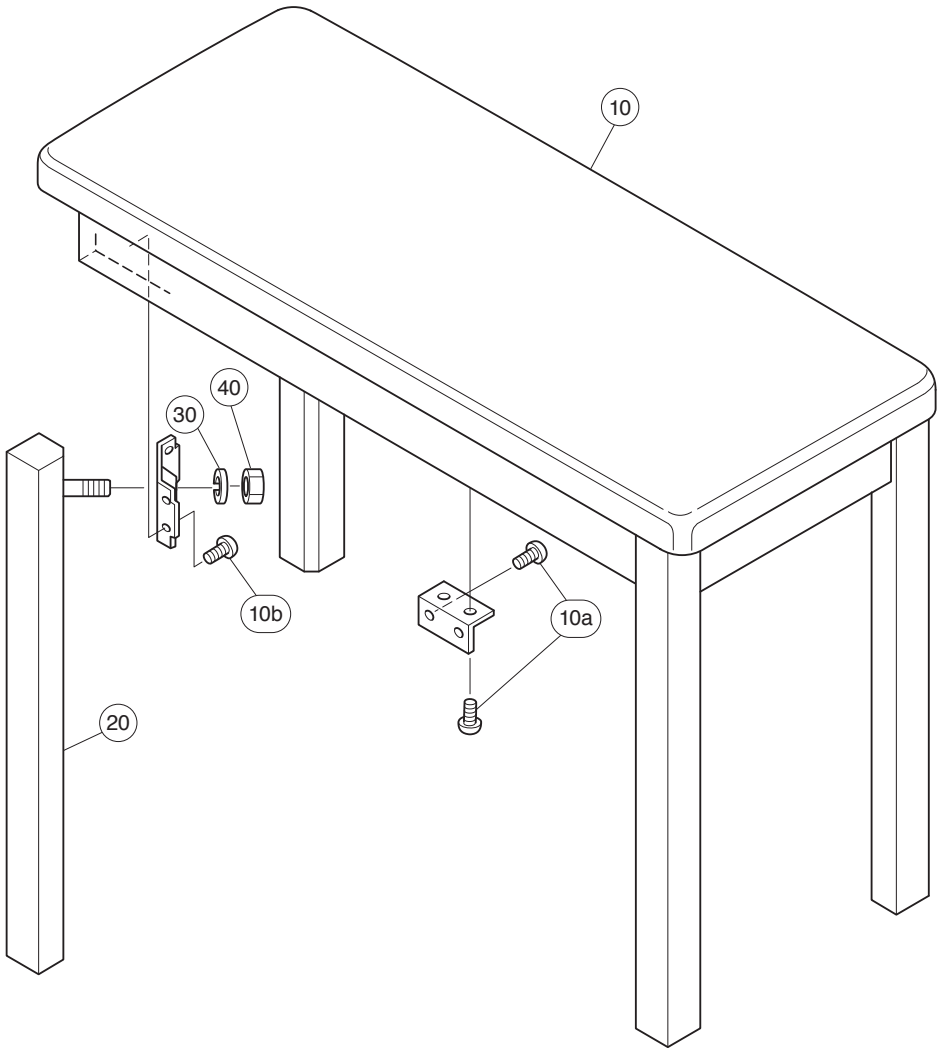

REF NO.	PART NO.	DESCRIPTION		部品名	REMARKS	QTY	RANK
		BENCH(BC-108)		椅子	CLP-525B		
	--	COMPLETE ASSEMBLY BENCH	BC-108BK	同梱品セット椅子	U,I,K,O,Y,P (ZH46980)		
A	--	BENCH UNIT	BC-108BK	椅子	U,I,K,O,Y,P (ZH48280)		
10	**ZH534800**	SEAT ASSEMBLY	BC-108BK	座板Ａｓｓ’ｙ	U,I,K,O,Y,P		
10a	**WE95460R**	BIND HEAD TAPPING SCREW-1	3.5X14 MFZN2W3	ＴＰ＃１＋ＢＩＮＤ	U,I,K,O,Y,P	16	01
10b	**WE97070R**	BIND HEAD TAPPING SCREW-1	3.5X16 MFZN2W3	ＴＰ＃１＋ＢＩＮＤ	U,I,K,O,Y,P	16	01
20	**ZH531700**	LEG ASSEMBLY	BC-108BK	脚柱Ａｓｓ’ｙ	U,I,K,O,Y,P	4	
30	**WF57760R**	SPRING WASHER #2 10.0	10 MFZN2W3	バネ座金	U,I,K,O,Y,P	4	01
40	**WF74260R**	HEXAGONAL NUT	M10 #1	ナット６角	U,I,K,O,Y,P	4	01
	V6886800	WRENCH		ベンチスパナ	U,I,K,O,Y,P		

REF NO.	PART NO.	DESCRIPTION		部品名	REMARKS	QTY	RANK
		BENCH(BC-108)		椅子	CLP-525R		
	--	COMPLETE ASSEMBLY BENCH	BC-108DR	同梱品セット椅子	U,I,K,O,Y,P (ZH46960)		
A	--	BENCH UNIT	BC-108DR	椅子	U,I,K,O,Y,P (ZH48260)		
10	**V553290R**	BENCH BOARD ASSEMBLY (BC100)	BC-100DR	座板Ａｓｓ’ｙ	U,I,K,O,Y,P		16
10a	**WE95460R**	BIND HEAD TAPPING SCREW-1	3.5X14 MFZN2W3	ＴＰ＃１＋ＢＩＮＤ	U,I,K,O,Y,P	16	01
10b	**WE97070R**	BIND HEAD TAPPING SCREW-1	3.5X16 MFZN2W3	ＴＰ＃１＋ＢＩＮＤ	U,I,K,O,Y,P	16	01
20	**ZH531500**	LEG ASSEMBLY	BC-108DR	脚柱Ａｓｓ’ｙ	U,I,K,O,Y,P	4	
30	**WF57760R**	SPRING WASHER #2 10.0	10 MFZN2W3	バネ座金	U,I,K,O,Y,P	4	01
40	**WF74260R**	HEXAGONAL NUT	M10 #1	ナット６角	U,I,K,O,Y,P	4	01
	V6886800	WRENCH		ベンチスパナ	U,I,K,O,Y,P		

REF NO.	PART NO.	DESCRIPTION		部品名	REMARKS	QTY	RANK
		BENCH(BC-108)		椅子	CLP-525PE		
	--	COMPLETE ASSEMBLY BENCH	BC-108PE	同梱品セット椅子	U,I,K,O,Y,P (ZH47000)		
A	--	BENCH UNIT	BC-108PE	椅子	U,I,K,O,Y,P (ZH48300)		
10	**WG479800**	BENCH BOARD ASSEMBLY	BC-100PE	座板Ａｓｓ’ｙ	U,I,K,O,Y,P		
10a	**WE95460R**	BIND HEAD TAPPING SCREW-1	3.5X14 MFZN2W3	ＴＰ＃１＋ＢＩＮＤ	U,I,K,O,Y,P	16	01
10b	**WE97070R**	BIND HEAD TAPPING SCREW-1	3.5X16 MFZN2W3	ＴＰ＃１＋ＢＩＮＤ	U,I,K,O,Y,P	16	01
20	**ZH531900**	LEG ASSEMBLY	BC-108PE	脚柱Ａｓｓ’ｙ	U,I,K,O,Y,P	4	
30	**WF57760R**	SPRING WASHER #2 10.0	10 MFZN2W3	バネ座金	U,I,K,O,Y,P	4	01
40	**WF74260R**	HEXAGONAL NUT	M10 #1	ナット６角	U,I,K,O,Y,P	4	01
	V6886800	WRENCH		ベンチスパナ	U,I,K,O,Y,P		

＊: New Parts（新規部品）

RANK : Japan only

■ ELECTRICAL PARTS

DM

	REF NO.	PART NO.	DESCRIPTION		部品名	REMARKS	QTY	RANK
			ELECTRICAL PARTS		電気部品	CLP-525B/CLP-525R/CLP-525PE		
*		**ZH572400**	CIRCUIT BOARD	DM	DMシート	(ZH57250)(YD988C0)		
		--	CIRCUIT BOARD	DCPJ	DCPJシート	(ZD30480)(YE683B0)		
						(ZE29910)		
		--	CIRCUIT BOARD	USB	USBシート	(ZD30480)(YE683B0)		
						(ZE29920)		
		--	CIRCUIT BOARD	HP	HPシート	(ZF15660)(XQ389C0)		
						(ZF15680)		
		WV760400	CIRCUIT BOARD	MK-L	MK-Lシート	(WV35460)(YC333D0)		11
		WV760500	CIRCUIT BOARD	MK-M	MK-Mシート	(WV35460)(YC333D0)		11
		WV760600	CIRCUIT BOARD	MK-H	MK-Hシート	(WV35460)(YC333D0)		11
		WP029200	CIRCUIT BOARD	PEDAL	PEDALシート	(WQ65870)(X9561D0)		05
		VU65910R	CIRCUIT BOARD	PL	PLシート	(VU65900)(XR898A0)		03
		ZA500400	CIRCUIT BOARD	PNL	PNLシート	(ZA50220)(YE108C0)		08
		ZA500500	CIRCUIT BOARD	PNR	PNRシート	(ZA50220)(YE108C0)		08
*		**ZH572400**	CIRCUIT BOARD	DM	DMシート	(ZH57250)(YD988C0)		
	CN1	**LB932020**	CONNECTOR	VH 2P TE	ベースポスト			
	CN8	**LB93204R**	CONNECTOR	VH 4P TE	ベースポスト			01
	C4	**US625100**	CERAMIC CAPACITOR (CHIP)	0.100 10V K RECT.	チップセラ(BJ)			01
	C6	**US663100**	CERAMIC CAPACITOR (CHIP)	1000P 50V K RECT.	チップセラ(B)			01
	-8	**US663100**	CERAMIC CAPACITOR (CHIP)	1000P 50V K RECT.	チップセラ(B)			01
	C10	**US663100**	CERAMIC CAPACITOR (CHIP)	1000P 50V K RECT.	チップセラ(B)			01
	C12	**US663100**	CERAMIC CAPACITOR (CHIP)	1000P 50V K RECT.	チップセラ(B)			01
	C15	**US663100**	CERAMIC CAPACITOR (CHIP)	1000P 50V K RECT.	チップセラ(B)			01
	C23	**WG888300**	MONOLITHIC CERAMIC CAP(CHIP)	10.0 6.3V K TP	チップ積層セラコン			01
	C23	**WG969400**	MONOLITHIC CERAMIC CAP(CHIP)	10.000 6.3V K KAKU	チップ積層セラコン			01
	C23	**WP882000**	CERAMIC CAPACITOR (CHIP)	10U 6.3V K RECT.	チップセラ			
	C25	**US634100**	CERAMIC CAPACITOR (CHIP)	0.010 16V K RECT.	チップセラ(B)			
	C29	**US634100**	CERAMIC CAPACITOR (CHIP)	0.010 16V K RECT.	チップセラ(B)			
	C30	**WG888300**	MONOLITHIC CERAMIC CAP(CHIP)	10.0 6.3V K TP	チップ積層セラコン			01
	C30	**WG969400**	MONOLITHIC CERAMIC CAP(CHIP)	10.000 6.3V K KAKU	チップ積層セラコン			01
	C30	**WP882000**	CERAMIC CAPACITOR (CHIP)	10U 6.3V K RECT.	チップセラ			
	C32	**US634100**	CERAMIC CAPACITOR (CHIP)	0.010 16V K RECT.	チップセラ(B)			
	C33	**WG888300**	MONOLITHIC CERAMIC CAP(CHIP)	10.0 6.3V K TP	チップ積層セラコン			01
	C33	**WG969400**	MONOLITHIC CERAMIC CAP(CHIP)	10.000 6.3V K KAKU	チップ積層セラコン			01
	C33	**WP882000**	CERAMIC CAPACITOR (CHIP)	10U 6.3V K RECT.	チップセラ			
	C108	**V8085400**	CERAMIC CAPACITOR (CHIP)	0.1000 25V K RECT.	チップセラ(B)			
	C112	**US063820**	CERAMIC CAPACITOR (CHIP)	8200P 50V K RECT.	チップセラ(B)			
	C113	**US063820**	CERAMIC CAPACITOR (CHIP)	8200P 50V K RECT.	チップセラ(B)			
	C124	**US662100**	CERAMIC CAPACITOR (CHIP)	100P 50V J RECT.	チップセラ(CH)			
	C131	**US662100**	CERAMIC CAPACITOR (CHIP)	100P 50V J RECT.	チップセラ(CH)			
	C142	**US625100**	CERAMIC CAPACITOR (CHIP)	0.100 10V K RECT.	チップセラ(BJ)			01
	C147	**US634100**	CERAMIC CAPACITOR (CHIP)	0.010 16V K RECT.	チップセラ(B)			
	C148	**US662100**	CERAMIC CAPACITOR (CHIP)	100P 50V J RECT.	チップセラ(CH)			
	C149	**US634100**	CERAMIC CAPACITOR (CHIP)	0.010 16V K RECT.	チップセラ(B)			
	C150	**US662100**	CERAMIC CAPACITOR (CHIP)	100P 50V J RECT.	チップセラ(CH)			
	C151	**US662100**	CERAMIC CAPACITOR (CHIP)	100P 50V J RECT.	チップセラ(CH)			
	C153	**US662100**	CERAMIC CAPACITOR (CHIP)	100P 50V J RECT.	チップセラ(CH)			
	C155	**US046100**	CERAMIC CAPACITOR (CHIP)	1.00 25V K RECT.	チップセラ(B)			01
	C156	**US046100**	CERAMIC CAPACITOR (CHIP)	1.00 25V K RECT.	チップセラ(B)			01
	C204	**US662100**	CERAMIC CAPACITOR (CHIP)	100P 50V J RECT.	チップセラ(CH)			
	C206	**US662100**	CERAMIC CAPACITOR (CHIP)	100P 50V J RECT.	チップセラ(CH)			
	-211	**US662100**	CERAMIC CAPACITOR (CHIP)	100P 50V J RECT.	チップセラ(CH)			
	C221	**US662100**	CERAMIC CAPACITOR (CHIP)	100P 50V J RECT.	チップセラ(CH)			
	C222	**US662100**	CERAMIC CAPACITOR (CHIP)	100P 50V J RECT.	チップセラ(CH)			
	C224	**US662100**	CERAMIC CAPACITOR (CHIP)	100P 50V J RECT.	チップセラ(CH)			
	C225	**US662100**	CERAMIC CAPACITOR (CHIP)	100P 50V J RECT.	チップセラ(CH)			
	C228	**US663100**	CERAMIC CAPACITOR (CHIP)	1000P 50V K RECT.	チップセラ(B)			01
	C229	**US661470**	CERAMIC CAPACITOR (CHIP)	47P 50V J RECT.	チップセラ(CH)			01
	C232	**US661470**	CERAMIC CAPACITOR (CHIP)	47P 50V J RECT.	チップセラ(CH)			01
	C234	**US663100**	CERAMIC CAPACITOR (CHIP)	1000P 50V K RECT.	チップセラ(B)			01
	C235	**US625100**	CERAMIC CAPACITOR (CHIP)	0.100 10V K RECT.	チップセラ(BJ)			01
	C236	**US625100**	CERAMIC CAPACITOR (CHIP)	0.100 10V K RECT.	チップセラ(BJ)			01
	C241	**US625100**	CERAMIC CAPACITOR (CHIP)	0.100 10V K RECT.	チップセラ(BJ)			01
	-243	**US625100**	CERAMIC CAPACITOR (CHIP)	0.100 10V K RECT.	チップセラ(BJ)			01
	C251	**US634100**	CERAMIC CAPACITOR (CHIP)	0.010 16V K RECT.	チップセラ(B)			
	-256	**US634100**	CERAMIC CAPACITOR (CHIP)	0.010 16V K RECT.	チップセラ(B)			
	C272	**US625100**	CERAMIC CAPACITOR (CHIP)	0.100 10V K RECT.	チップセラ(BJ)			01
	-275	**US625100**	CERAMIC CAPACITOR (CHIP)	0.100 10V K RECT.	チップセラ(BJ)			01

＊: New Parts（新規部品）　　RANK : Japan only

DM

REF NO.	PART NO.	DESCRIPTION		部品名	REMARKS	QTY	RANK
C285	**US625100**	CERAMIC CAPACITOR (CHIP)	0.100 10V K RECT.	チップセラ(BJ)			01
-288	**US625100**	CERAMIC CAPACITOR (CHIP)	0.100 10V K RECT.	チップセラ(BJ)			01
C301	**US625100**	CERAMIC CAPACITOR (CHIP)	0.100 10V K RECT.	チップセラ(BJ)			01
C311	**US625100**	CERAMIC CAPACITOR (CHIP)	0.100 10V K RECT.	チップセラ(BJ)			01
C313	**WG888300**	MONOLITHIC CERAMIC CAP(CHIP)	10.0 6.3V K TP	チップ積層セラコン			01
C313	**WG969400**	MONOLITHIC CERAMIC CAP(CHIP)	10.000 6.3V K KAKU	チップ積層セラコン			01
C313	**WP882000**	CERAMIC CAPACITOR (CHIP)	10U 6.3V K RECT.	チップセラ			
C314	**US625100**	CERAMIC CAPACITOR (CHIP)	0.100 10V K RECT.	チップセラ(BJ)			01
C315	**WG888300**	MONOLITHIC CERAMIC CAP(CHIP)	10.0 6.3V K TP	チップ積層セラコン			01
C315	**WG969400**	MONOLITHIC CERAMIC CAP(CHIP)	10.000 6.3V K KAKU	チップ積層セラコン			01
C315	**WP882000**	CERAMIC CAPACITOR (CHIP)	10U 6.3V K RECT.	チップセラ			
C316	**WG888300**	MONOLITHIC CERAMIC CAP(CHIP)	10.0 6.3V K TP	チップ積層セラコン			01
C316	**WG969400**	MONOLITHIC CERAMIC CAP(CHIP)	10.000 6.3V K KAKU	チップ積層セラコン			01
C316	**WP882000**	CERAMIC CAPACITOR (CHIP)	10U 6.3V K RECT.	チップセラ			
C317	**US625100**	CERAMIC CAPACITOR (CHIP)	0.100 10V K RECT.	チップセラ(BJ)			01
-362	**US625100**	CERAMIC CAPACITOR (CHIP)	0.100 10V K RECT.	チップセラ(BJ)			01
C372	**US625100**	CERAMIC CAPACITOR (CHIP)	0.100 10V K RECT.	チップセラ(BJ)			01
C376	**US625100**	CERAMIC CAPACITOR (CHIP)	0.100 10V K RECT.	チップセラ(BJ)			01
C377	**US625100**	CERAMIC CAPACITOR (CHIP)	0.100 10V K RECT.	チップセラ(BJ)			01
C380	**US625100**	CERAMIC CAPACITOR (CHIP)	0.100 10V K RECT.	チップセラ(BJ)			01
C382	**US625100**	CERAMIC CAPACITOR (CHIP)	0.100 10V K RECT.	チップセラ(BJ)			01
C384	**US625100**	CERAMIC CAPACITOR (CHIP)	0.100 10V K RECT.	チップセラ(BJ)			01
C386	**US625100**	CERAMIC CAPACITOR (CHIP)	0.100 10V K RECT.	チップセラ(BJ)			01
C401	**US634100**	CERAMIC CAPACITOR (CHIP)	0.010 16V K RECT.	チップセラ(B)			
C402	**US625100**	CERAMIC CAPACITOR (CHIP)	0.100 10V K RECT.	チップセラ(BJ)			01
C406	**US663100**	CERAMIC CAPACITOR (CHIP)	1000P 50V K RECT.	チップセラ(B)			01
C407	**US625100**	CERAMIC CAPACITOR (CHIP)	0.100 10V K RECT.	チップセラ(BJ)			01
IC3	**YD113A00**	IC	RP131H331D-T1-FE 3	IC	REGULATOR +3.3V		01
IC5	**YD932A00**	IC	RP131H121D-T1-FE 1	IC	REGULATOR +1.2V		01
IC151	**YC967A00**	IC	MAX9820ETB+T 95MW	IC	HEADPHONE AMP		04
* IC302	**YF779B00**	IC	MX29LV640EBTI-70G	IC	FLASH ROM 64M(PROG)		
IC304	**YC976B00**	IC	MX29GL128ELT2I-90G	IC	FLASH ROM 128M(WAVE)		07
IC401	**X9347A00**	IC	R3112N291A-TR-FE	IC	VOLTAGE DETECTOR		01
IC403	**XY806A0R**	IC	TC7WH14FU(TE12L,F)	IC	INVERTER		02
L6	**V2747000**	CHIP INDUCTANCE	BLM18PG600SN1	チップインダクタ			
L204	**WK139000**	CHIP INDUCTANCE	600 BK1005HM601-T	チップインダクタ			01
R20	**RD459100**	CARBON RESISTOR (CHIP)	1.0M 63M J RECT.	チップ抵抗			
R101	**RD457100**	CARBON RESISTOR (CHIP)	10.0K 63M J RECT.	チップ抵抗			
R103	**RD457100**	CARBON RESISTOR (CHIP)	10.0K 63M J RECT.	チップ抵抗			
R121	**RD253100**	CARBON RESISTOR (CHIP)	1.0 0.1 J RECT.	チップ抵抗			
R124	**RD45000R**	CARBON RESISTOR (CHIP)	0.00 63M J RECT.	チップ抵抗			01
R141	**RD45612R**	CARBON RESISTOR (CHIP)	1.2K 63M J RECT.	チップ抵抗			01
R142	**RD45747R**	CARBON RESISTOR (CHIP)	47.0K 63M J RECT.	チップ抵抗			01
R144	**RD45000R**	CARBON RESISTOR (CHIP)	0.00 63M J RECT.	チップ抵抗			01
R151	**RD457330**	CARBON RESISTOR (CHIP)	33.0K 63M J RECT.	チップ抵抗			01
R152	**RD457330**	CARBON RESISTOR (CHIP)	33.0K 63M J RECT.	チップ抵抗			01
R153	**RD457150**	CARBON RESISTOR (CHIP)	15.0K 63M J RECT.	チップ抵抗			01
R154	**RD457150**	CARBON RESISTOR (CHIP)	15.0K 63M J RECT.	チップ抵抗			01
R202	**RD457100**	CARBON RESISTOR (CHIP)	10.0K 63M J RECT.	チップ抵抗			
R204	**RD457100**	CARBON RESISTOR (CHIP)	10.0K 63M J RECT.	チップ抵抗			
R211	**RD457100**	CARBON RESISTOR (CHIP)	10.0K 63M J RECT.	チップ抵抗			
R212	**RD457100**	CARBON RESISTOR (CHIP)	10.0K 63M J RECT.	チップ抵抗			
R215	**RD454680**	CARBON RESISTOR (CHIP)	68.0 63M J RECT.	チップ抵抗			01
R217	**RD45747R**	CARBON RESISTOR (CHIP)	47.0K 63M J RECT.	チップ抵抗			01
R224	**RD457100**	CARBON RESISTOR (CHIP)	10.0K 63M J RECT.	チップ抵抗			
R227	**RD457100**	CARBON RESISTOR (CHIP)	10.0K 63M J RECT.	チップ抵抗			
R229	**RD45522R**	CARBON RESISTOR (CHIP)	220.0 63M J RECT.	チップ抵抗			01
R247	**RD458470**	CARBON RESISTOR (CHIP)	470.0K 63M J RECT.	チップ抵抗			
R253	**RD45000R**	CARBON RESISTOR (CHIP)	0.00 63M J RECT.	チップ抵抗			01
R258	**RD455330**	CARBON RESISTOR (CHIP)	330.0 63M J RECT.	チップ抵抗			
R259	**RD455330**	CARBON RESISTOR (CHIP)	330.0 63M J RECT.	チップ抵抗			
R260	**RD455680**	CARBON RESISTOR (CHIP)	680.0 63M J RECT.	チップ抵抗			
R261	**RD455330**	CARBON RESISTOR (CHIP)	330.0 63M J RECT.	チップ抵抗			
R307	**RD454680**	CARBON RESISTOR (CHIP)	68.0 63M J RECT.	チップ抵抗			01
-309	**RD454680**	CARBON RESISTOR (CHIP)	68.0 63M J RECT.	チップ抵抗			01
R314	**RD457100**	CARBON RESISTOR (CHIP)	10.0K 63M J RECT.	チップ抵抗			
R315	**RD457100**	CARBON RESISTOR (CHIP)	10.0K 63M J RECT.	チップ抵抗			
R323	**RD454680**	CARBON RESISTOR (CHIP)	68.0 63M J RECT.	チップ抵抗			01
R324	**RD454680**	CARBON RESISTOR (CHIP)	68.0 63M J RECT.	チップ抵抗			01
R330	**RD454220**	CARBON RESISTOR (CHIP)	22.0 63M J RECT.	チップ抵抗			

＊: New Parts（新規部品）

RANK : Japan only

DM

REF NO.	PART NO.	DESCRIPTION		部品名	REMARKS	QTY	RANK
R331	**RD454220**	CARBON RESISTOR (CHIP)	22.0 63M J RECT.	チップ抵抗			
R336	**RD454220**	CARBON RESISTOR (CHIP)	22.0 63M J RECT.	チップ抵抗			
R341	**RD456100**	CARBON RESISTOR (CHIP)	1.0K 63M J RECT.	チップ抵抗			
R344	**RD457100**	CARBON RESISTOR (CHIP)	10.0K 63M J RECT.	チップ抵抗			
-346	**RD457100**	CARBON RESISTOR (CHIP)	10.0K 63M J RECT.	チップ抵抗			
R351	**RD457100**	CARBON RESISTOR (CHIP)	10.0K 63M J RECT.	チップ抵抗			
R356	**RD454680**	CARBON RESISTOR (CHIP)	68.0 63M J RECT.	チップ抵抗			01
-359	**RD454680**	CARBON RESISTOR (CHIP)	68.0 63M J RECT.	チップ抵抗			01
R366	**RD454220**	CARBON RESISTOR (CHIP)	22.0 63M J RECT.	チップ抵抗			
R367	**RD454220**	CARBON RESISTOR (CHIP)	22.0 63M J RECT.	チップ抵抗			
R402	**RD457100**	CARBON RESISTOR (CHIP)	10.0K 63M J RECT.	チップ抵抗			
R408	**RD454680**	CARBON RESISTOR (CHIP)	68.0 63M J RECT.	チップ抵抗			01
R410	**RD454680**	CARBON RESISTOR (CHIP)	68.0 63M J RECT.	チップ抵抗			01
R411	**RD456100**	CARBON RESISTOR (CHIP)	1.0K 63M J RECT.	チップ抵抗			
R417	**RD457100**	CARBON RESISTOR (CHIP)	10.0K 63M J RECT.	チップ抵抗			
R418	**RD456560**	CARBON RESISTOR (CHIP)	5.6K 63M J RECT.	チップ抵抗			
RA305	**WH205400**	RESISTOR ARRAY	22 X 4	抵抗アレイ			01
-309	**WH205400**	RESISTOR ARRAY	22 X 4	抵抗アレイ			01
RA312	**WH211800**	RESISTOR ARRAY	10K X 4	抵抗アレイ			01
RA318	**WH206600**	RESISTOR ARRAY	68 X 4	抵抗アレイ			01
-321	**WH206600**	RESISTOR ARRAY	68 X 4	抵抗アレイ			01
RA335	**WH205400**	RESISTOR ARRAY	22 X 4	抵抗アレイ			01
-338	**WH205400**	RESISTOR ARRAY	22 X 4	抵抗アレイ			01
RA339	**WH206600**	RESISTOR ARRAY	68 X 4	抵抗アレイ			01
RA340	**WH206600**	RESISTOR ARRAY	68 X 4	抵抗アレイ			01
RA343	**WH206600**	RESISTOR ARRAY	68 X 4	抵抗アレイ			01
TR4	**VV556500**	TRANSISTOR	1037AK Q,R,S TP	トランジスタ 2SA			
TR4	**WC529500**	TRANSISTOR	KTA1504S-Y,GR-RTK/	トランジスタ			
TR201	**VV556400**	TRANSISTOR	2SC2412K Q,R,S TP	トランジスタ			
TR201	**WC529400**	TRANSISTOR	KTC3875S-Y,GR-RTK/	トランジスタ			
TR202	**VY67760R**	DIGITAL TRANSISTOR	DTC123JKA TP	デジタルトランジスタ			01
-205	**VY67760R**	DIGITAL TRANSISTOR	DTC123JKA TP	デジタルトランジスタ			01
ZD201	**VU172200**	ZENER DIODE	UDZS6.8BTE-17 6.8V	ツェナーダイオード			
C1	**US662100**	CERAMIC CAPACITOR (CHIP)	100P 50V J RECT.	チップセラ(CH)			
C2	**US662100**	CERAMIC CAPACITOR (CHIP)	100P 50V J RECT.	チップセラ(CH)			
C3	**V8085400**	CERAMIC CAPACITOR (CHIP)	0.1000 25V K RECT.	チップセラ(B)			
C5	**UF14810R**	ELECTROLYTIC CAPACITOR(CHIP)	100 25V	チップケミコン			01
C9	**V8085400**	CERAMIC CAPACITOR (CHIP)	0.1000 25V K RECT.	チップセラ(B)			
C11	**V8085400**	CERAMIC CAPACITOR (CHIP)	0.1000 25V K RECT.	チップセラ(B)			
C16	**WN110600**	MONOLITHIC CERAMIC CAP(CHIP)	4.700 25V K KAKUTE	チップ積層セラコン			01
C19	**US663100**	CERAMIC CAPACITOR (CHIP)	1000P 50V K RECT.	チップセラ(B)			01
C20	**WJ590700**	CERAMIC CAPACITOR (CHIP)	0.47 16V K RECT.	チップセラ			
C21	**WG888300**	MONOLITHIC CERAMIC CAP(CHIP)	10.0 6.3V K TP	チップ積層セラコン			01
C21	**WG969400**	MONOLITHIC CERAMIC CAP(CHIP)	10.000 6.3V K KAKU	チップ積層セラコン			01
C21	**WP882000**	CERAMIC CAPACITOR (CHIP)	10U 6.3V K RECT.	チップセラ			
C22	**UF038100**	CAPACITOR	100 16V	チップケミコン			
C27	**UF038100**	CAPACITOR	100 16V	チップケミコン			
C31	**US662100**	CERAMIC CAPACITOR (CHIP)	100P 50V J RECT.	チップセラ(CH)			
C101	**WG251600**	CERAMIC CAPACITOR (CHIP)	4.7 6.3V K RECT.	チップセラ			01
C102	**US046100**	CERAMIC CAPACITOR (CHIP)	1.00 25V K RECT.	チップセラ(B)			01
C103	**WN019700**	CERAMIC CAPACITOR (CHIP)	2.200 16V K RECT.	チップセラ			
C104	**US046100**	CERAMIC CAPACITOR (CHIP)	1.00 25V K RECT.	チップセラ(B)			01
C105	**WG251600**	CERAMIC CAPACITOR (CHIP)	4.7 6.3V K RECT.	チップセラ			01
C106	**V8085400**	CERAMIC CAPACITOR (CHIP)	0.1000 25V K RECT.	チップセラ(B)			
C107	**V8085400**	CERAMIC CAPACITOR (CHIP)	0.1000 25V K RECT.	チップセラ(B)			
C109	**V8085400**	CERAMIC CAPACITOR (CHIP)	0.1000 25V K RECT.	チップセラ(B)			
C110	**US046100**	CERAMIC CAPACITOR (CHIP)	1.00 25V K RECT.	チップセラ(B)			01
C111	**WC37000R**	ELECTROLYTIC CAPACITOR	220.00 35.0V	チップケミコン UD			01
C114	**US046100**	CERAMIC CAPACITOR (CHIP)	1.00 25V K RECT.	チップセラ(B)			01
-117	**US046100**	CERAMIC CAPACITOR (CHIP)	1.00 25V K RECT.	チップセラ(B)			01
C118	**UF06610R**	ELECTROLYTIC CAPACITOR(CHIP)	1 50V	チップケミコン			01
C119	**UF06610R**	ELECTROLYTIC CAPACITOR(CHIP)	1 50V	チップケミコン			01
C120	**V8085400**	CERAMIC CAPACITOR (CHIP)	0.1000 25V K RECT.	チップセラ(B)			
-123	**V8085400**	CERAMIC CAPACITOR (CHIP)	0.1000 25V K RECT.	チップセラ(B)			
C127	**V8085400**	CERAMIC CAPACITOR (CHIP)	0.1000 25V K RECT.	チップセラ(B)			
-130	**V8085400**	CERAMIC CAPACITOR (CHIP)	0.1000 25V K RECT.	チップセラ(B)			
C133	**V8085400**	CERAMIC CAPACITOR (CHIP)	0.1000 25V K RECT.	チップセラ(B)			
-138	**V8085400**	CERAMIC CAPACITOR (CHIP)	0.1000 25V K RECT.	チップセラ(B)			
C139	**US663100**	CERAMIC CAPACITOR (CHIP)	1000P 50V K RECT.	チップセラ(B)			01
C140	**US663100**	CERAMIC CAPACITOR (CHIP)	1000P 50V K RECT.	チップセラ(B)			01

＊: New Parts（新規部品）

RANK : Japan only

DM

REF NO.	PART NO.	DESCRIPTION		部品名	REMARKS	QTY	RANK
C141	**UF038100**	CAPACITOR	100 16V	チップケミコン			
C202	**US625100**	CERAMIC CAPACITOR (CHIP)	0.100 10V K RECT.	チップセラ(BJ)			01
C203	**WG888300**	MONOLITHIC CERAMIC CAP(CHIP)	10.0 6.3V K TP	チップ積層セラコン			01
C203	**WG969400**	MONOLITHIC CERAMIC CAP(CHIP)	10.000 6.3V K KAKU	チップ積層セラコン			01
C203	**WP882000**	CERAMIC CAPACITOR (CHIP)	10U 6.3V K RECT.	チップセラ			
C212	**US625100**	CERAMIC CAPACITOR (CHIP)	0.100 10V K RECT.	チップセラ(BJ)			01
C223	**US663100**	CERAMIC CAPACITOR (CHIP)	1000P 50V K RECT.	チップセラ(B)			01
C227	**US663100**	CERAMIC CAPACITOR (CHIP)	1000P 50V K RECT.	チップセラ(B)			01
C231	**US625100**	CERAMIC CAPACITOR (CHIP)	0.100 10V K RECT.	チップセラ(BJ)			01
C238	**US625100**	CERAMIC CAPACITOR (CHIP)	0.100 10V K RECT.	チップセラ(BJ)			01
-240	**US625100**	CERAMIC CAPACITOR (CHIP)	0.100 10V K RECT.	チップセラ(BJ)			01
C248	**US634100**	CERAMIC CAPACITOR (CHIP)	0.010 16V K RECT.	チップセラ(B)			
-250	**US634100**	CERAMIC CAPACITOR (CHIP)	0.010 16V K RECT.	チップセラ(B)			
C257	**US634100**	CERAMIC CAPACITOR (CHIP)	0.010 16V K RECT.	チップセラ(B)			
C258	**US661180**	CERAMIC CAPACITOR (CHIP)	18P 50V J RECT.	チップセラ(CH)			01
C259	**US661180**	CERAMIC CAPACITOR (CHIP)	18P 50V J RECT.	チップセラ(CH)			01
C271	**US625100**	CERAMIC CAPACITOR (CHIP)	0.100 10V K RECT.	チップセラ(BJ)			01
C281	**US625100**	CERAMIC CAPACITOR (CHIP)	0.100 10V K RECT.	チップセラ(BJ)			01
-284	**US625100**	CERAMIC CAPACITOR (CHIP)	0.100 10V K RECT.	チップセラ(BJ)			01
C302	**US661100**	CERAMIC CAPACITOR (CHIP)	10P 50V D RECT.	チップセラ(CH)			01
C303	**US661100**	CERAMIC CAPACITOR (CHIP)	10P 50V D RECT.	チップセラ(CH)			01
C304	**WG888300**	MONOLITHIC CERAMIC CAP(CHIP)	10.0 6.3V K TP	チップ積層セラコン			01
C304	**WG969400**	MONOLITHIC CERAMIC CAP(CHIP)	10.000 6.3V K KAKU	チップ積層セラコン			01
C304	**WP882000**	CERAMIC CAPACITOR (CHIP)	10U 6.3V K RECT.	チップセラ			
C305	**US625100**	CERAMIC CAPACITOR (CHIP)	0.100 10V K RECT.	チップセラ(BJ)			01
-310	**US625100**	CERAMIC CAPACITOR (CHIP)	0.100 10V K RECT.	チップセラ(BJ)			01
C363	**WG888300**	MONOLITHIC CERAMIC CAP(CHIP)	10.0 6.3V K TP	チップ積層セラコン			01
C363	**WG969400**	MONOLITHIC CERAMIC CAP(CHIP)	10.000 6.3V K KAKU	チップ積層セラコン			01
C363	**WP882000**	CERAMIC CAPACITOR (CHIP)	10U 6.3V K RECT.	チップセラ			
C364	**US625100**	CERAMIC CAPACITOR (CHIP)	0.100 10V K RECT.	チップセラ(BJ)			01
-371	**US625100**	CERAMIC CAPACITOR (CHIP)	0.100 10V K RECT.	チップセラ(BJ)			01
C373	**US625100**	CERAMIC CAPACITOR (CHIP)	0.100 10V K RECT.	チップセラ(BJ)			01
-375	**US625100**	CERAMIC CAPACITOR (CHIP)	0.100 10V K RECT.	チップセラ(BJ)			01
C378	**US625100**	CERAMIC CAPACITOR (CHIP)	0.100 10V K RECT.	チップセラ(BJ)			01
C379	**US625100**	CERAMIC CAPACITOR (CHIP)	0.100 10V K RECT.	チップセラ(BJ)			01
C381	**US625100**	CERAMIC CAPACITOR (CHIP)	0.100 10V K RECT.	チップセラ(BJ)			01
C383	**US625100**	CERAMIC CAPACITOR (CHIP)	0.100 10V K RECT.	チップセラ(BJ)			01
C385	**US625100**	CERAMIC CAPACITOR (CHIP)	0.100 10V K RECT.	チップセラ(BJ)			01
C387	**US625100**	CERAMIC CAPACITOR (CHIP)	0.100 10V K RECT.	チップセラ(BJ)			01
C403	**US625100**	CERAMIC CAPACITOR (CHIP)	0.100 10V K RECT.	チップセラ(BJ)			01
C404	**US625100**	CERAMIC CAPACITOR (CHIP)	0.100 10V K RECT.	チップセラ(BJ)			01
C408	**US625100**	CERAMIC CAPACITOR (CHIP)	0.100 10V K RECT.	チップセラ(BJ)			01
C409	**US625100**	CERAMIC CAPACITOR (CHIP)	0.100 10V K RECT.	チップセラ(BJ)			01
CN2	**WB560700**	CONNECTOR	ZH 12P TE	ベースピン			02
CN3	**VT388900**	CONNECTOR	PH 8P TE	ベース付ポスト			
CN4	**VT388800**	CONNECTOR	PH 7P TE	ベース付ポスト			
CN5	**WB560300**	CONNECTOR	ZH 8P TE	ベースピン			01
CN7	**VT388600**	CONNECTOR	PH 5P TE	ベース付ポスト			
CN9	**VT388400**	CONNECTOR	PH 3P TE	ベース付ポスト			
D2	**WM940400**	DIODE	RB070M-30TR TP	ダイオード			01
DA203	**V9424900**	DIODE ARRAY	1SS372 TE85L	ダイオードアレイ			01
DA203	**WP361700**	DIODE ARRAY	KDR731-RTK/P 0.07A	ダイオードアレイ			
DA203	**WV973800**	DIODE ARRAY	DB3J316F0L 0.10A X	ダイオードアレイ			
DA203	**ZC632200**	DIODE ARRAY	HRB0103B 0.10A X2	ダイオードアレイ			01
DA204	**V9424900**	DIODE ARRAY	1SS372 TE85L	ダイオードアレイ			01
DA204	**WP361700**	DIODE ARRAY	KDR731-RTK/P 0.07A	ダイオードアレイ			
DA204	**WV973800**	DIODE ARRAY	DB3J316F0L 0.10A X	ダイオードアレイ			
DA204	**ZC632200**	DIODE ARRAY	HRB0103B 0.10A X2	ダイオードアレイ			01
IC2	**YD832A00**	IC	R1245K003G-TR	IC	DC-DC CONVERTER		02
IC101	**--**	IC	R8A02042BG	IC	SWX08 (YC479A0)		
IC102	**YC681A00**	IC	WM8524GEDT/R	IC	DAC		
IC102	**YC681B00**	IC	WM8524CGEDT/R	IC			
IC103	**YD652A00**	IC	YDA164C-QZE2	IC	POWER AMP 20Wx2		04
IC301	**X3584E00**	IC	W9812G6JH-6 SDRAM	IC	SDRAM 128M		04
IC301	**X6970D00**	IC	M12L128168A-7TG2L	IC			05
IC301	**X6970E00**	IC	M12L128168A-6TG2N	IC			
IC305	**X2590C00**	IC	W9816G6IH-7 SDRAM	IC	SDRAM 16M		04
IC305	**X5693D00**	IC	M12L16161A-7TG2Q S	IC			
IC402	**X6611A00**	IC	SN74LV123APWR	IC	SINGLE SHOT		01
IC402	**X8506A01**	IC	TC74VHC123AFT EL,K	IC			02

＊: New Parts (新規部品)

RANK : Japan only

DM

REF NO.	PART NO.	DESCRIPTION		部品名	REMARKS	QTY	RANK
IC404	**XY806A0R**	IC	TC7WH14FU(TE12L,F)	I C	INVERTER		02
IC405	**X2377A0R**	IC	SN74LV21APWR	I C	AND		01
IC405	**X5542A00**	IC	TC74VHC21FT(EL) 4I	I C			01
L1	**RD350000**	CARBON RESISTOR (CHIP)	0 63M J RECT.	チップ抵抗			
L3	**ZA324800**	INDUCTANCE	2.4U 7E04NB-2R4N-G	チップインダクタ			01
L5	**WM459400**	CHIP INDUCTANCE	BLM18PG121SN1D 160	チップインダクタ			01
L101	**WJ018200**	COIL INDUCTOR CHIP	BLM18SG700TN1D 1	チップインダクタ			01
L102	**WZ540200**	INDUCTOR	10U DER7052-100M-R	チップインダクタ			01
-105	**WZ540200**	INDUCTOR	10U DER7052-100M-R	チップインダクタ			01
L201	**WK139000**	CHIP INDUCTANCE	600 BK1005HM601-T	チップインダクタ			01
-203	**WK139000**	CHIP INDUCTANCE	600 BK1005HM601-T	チップインダクタ			01
L206	**WE863900**	COIL INDUCTANCE CHIP	DLP11SN900HL2L 1	コモンモードコイル			01
L207	**V2747000**	CHIP INDUCTANCE	BLM18PG600SN1	チップインダクタ			
R3	**RD456100**	CARBON RESISTOR (CHIP)	1.0K 63M J RECT.	チップ抵抗			
-5	**RD456100**	CARBON RESISTOR (CHIP)	1.0K 63M J RECT.	チップ抵抗			
R11	**RD458100**	CARBON RESISTOR (CHIP)	100.0K 63M J RECT.	チップ抵抗			
R12	**RD458100**	CARBON RESISTOR (CHIP)	100.0K 63M J RECT.	チップ抵抗			
R23	**RF456120**	CARBON RESISTOR (CHIP)	1.2K D 1608	チップ抵抗			
R24	**RD45747R**	CARBON RESISTOR (CHIP)	47.0K 63M J RECT.	チップ抵抗			01
R25	**RF456820**	CARBON RESISTOR (CHIP)	8.2K D RECT.	チップ抵抗			
R27	**RD45747R**	CARBON RESISTOR (CHIP)	47.0K 63M J RECT.	チップ抵抗			01
R28	**RD457150**	CARBON RESISTOR (CHIP)	15.0K 63M J RECT.	チップ抵抗			01
R29	**RD45747R**	CARBON RESISTOR (CHIP)	47.0K 63M J RECT.	チップ抵抗			01
R30	**RD456220**	CARBON RESISTOR (CHIP)	2.2K 63M J RECT.	チップ抵抗			
R31	**RF457270**	CARBON RESISTOR (CHIP)	27.0K D RECT.	チップ抵抗			
R32	**RD350000**	CARBON RESISTOR (CHIP)	0 63M J RECT.	チップ抵抗			
R33	**RD350000**	CARBON RESISTOR (CHIP)	0 63M J RECT.	チップ抵抗			
R35	**RD350000**	CARBON RESISTOR (CHIP)	0 63M J RECT.	チップ抵抗			
R36	**RD350000**	CARBON RESISTOR (CHIP)	0 63M J RECT.	チップ抵抗			
R104	**RD454680**	CARBON RESISTOR (CHIP)	68.0 63M J RECT.	チップ抵抗			01
-109	**RD454680**	CARBON RESISTOR (CHIP)	68.0 63M J RECT.	チップ抵抗			01
R111	**RD45000R**	CARBON RESISTOR (CHIP)	0.00 63M J RECT.	チップ抵抗			01
-113	**RD45000R**	CARBON RESISTOR (CHIP)	0.00 63M J RECT.	チップ抵抗			01
R115	**RD45000R**	CARBON RESISTOR (CHIP)	0.00 63M J RECT.	チップ抵抗			01
R117	**RD45000R**	CARBON RESISTOR (CHIP)	0.00 63M J RECT.	チップ抵抗			01
R118	**RD45000R**	CARBON RESISTOR (CHIP)	0.00 63M J RECT.	チップ抵抗			01
R119	**RD455560**	CARBON RESISTOR (CHIP)	560.0 63M J RECT.	チップ抵抗			
R120	**RD455560**	CARBON RESISTOR (CHIP)	560.0 63M J RECT.	チップ抵抗			
R128	**RD45000R**	CARBON RESISTOR (CHIP)	0.00 63M J RECT.	チップ抵抗			01
R129	**RD45000R**	CARBON RESISTOR (CHIP)	0.00 63M J RECT.	チップ抵抗			01
R132	**RD455100**	CARBON RESISTOR (CHIP)	100.0 63M J RECT.	チップ抵抗			
R133	**RD455100**	CARBON RESISTOR (CHIP)	100.0 63M J RECT.	チップ抵抗			
R135	**RD45747R**	CARBON RESISTOR (CHIP)	47.0K 63M J RECT.	チップ抵抗			01
R140	**RD455100**	CARBON RESISTOR (CHIP)	100.0 63M J RECT.	チップ抵抗			
R155	**RD45747R**	CARBON RESISTOR (CHIP)	47.0K 63M J RECT.	チップ抵抗			01
R156	**RD45747R**	CARBON RESISTOR (CHIP)	47.0K 63M J RECT.	チップ抵抗			01
R157	**RD350000**	CARBON RESISTOR (CHIP)	0 63M J RECT.	チップ抵抗			
R159	**RD457100**	CARBON RESISTOR (CHIP)	10.0K 63M J RECT.	チップ抵抗			
R160	**RD45000R**	CARBON RESISTOR (CHIP)	0.00 63M J RECT.	チップ抵抗			01
R203	**RD457100**	CARBON RESISTOR (CHIP)	10.0K 63M J RECT.	チップ抵抗			
R205	**RD456100**	CARBON RESISTOR (CHIP)	1.0K 63M J RECT.	チップ抵抗			
R208	**RA154220**	CARBON RESISTOR (CHIP)	22.0 63M D RECT.	チップ金被抵抗			
R209	**RA154220**	CARBON RESISTOR (CHIP)	22.0 63M D RECT.	チップ金被抵抗			
R218	**RD455100**	CARBON RESISTOR (CHIP)	100.0 63M J RECT.	チップ抵抗			
R219	**RD456390**	CARBON RESISTOR (CHIP)	3.9K 63M J RECT.	チップ抵抗			
-223	**RD456390**	CARBON RESISTOR (CHIP)	3.9K 63M J RECT.	チップ抵抗			
R225	**RD456390**	CARBON RESISTOR (CHIP)	3.9K 63M J RECT.	チップ抵抗			
R228	**RD456390**	CARBON RESISTOR (CHIP)	3.9K 63M J RECT.	チップ抵抗			
R230	**RD456220**	CARBON RESISTOR (CHIP)	2.2K 63M J RECT.	チップ抵抗			
-236	**RD456220**	CARBON RESISTOR (CHIP)	2.2K 63M J RECT.	チップ抵抗			
R237	**RD455330**	CARBON RESISTOR (CHIP)	330.0 63M J RECT.	チップ抵抗			
-240	**RD455330**	CARBON RESISTOR (CHIP)	330.0 63M J RECT.	チップ抵抗			
R244	**RD457100**	CARBON RESISTOR (CHIP)	10.0K 63M J RECT.	チップ抵抗			
R245	**RD45615R**	CARBON RESISTOR (CHIP)	1.5K 63M J RECT.	チップ抵抗			01
R246	**RD456100**	CARBON RESISTOR (CHIP)	1.0K 63M J RECT.	チップ抵抗			
R250	**RD45615R**	CARBON RESISTOR (CHIP)	1.5K 63M J RECT.	チップ抵抗			01
R251	**RD455100**	CARBON RESISTOR (CHIP)	100.0 63M J RECT.	チップ抵抗			
R252	**RD45000R**	CARBON RESISTOR (CHIP)	0.00 63M J RECT.	チップ抵抗			01
R254	**RD456390**	CARBON RESISTOR (CHIP)	3.9K 63M J RECT.	チップ抵抗			
-257	**RD456390**	CARBON RESISTOR (CHIP)	3.9K 63M J RECT.	チップ抵抗			

＊: New Parts（新規部品）

RANK : Japan only

DM,DCPJ,USB

REF NO.	PART NO.	DESCRIPTION		部品名	REMARKS	QTY	RANK
R262	**RD45615R**	CARBON RESISTOR (CHIP)	1.5K 63M J RECT.	チップ抵抗			01
R263	**RD45615R**	CARBON RESISTOR (CHIP)	1.5K 63M J RECT.	チップ抵抗			01
R264	**RD45747R**	CARBON RESISTOR (CHIP)	47.0K 63M J RECT.	チップ抵抗			01
R265	**RD45000R**	CARBON RESISTOR (CHIP)	0.00 63M J RECT.	チップ抵抗			01
R302	**RD455330**	CARBON RESISTOR (CHIP)	330.0 63M J RECT.	チップ抵抗			
R303	**RD454680**	CARBON RESISTOR (CHIP)	68.0 63M J RECT.	チップ抵抗			01
-305	**RD454680**	CARBON RESISTOR (CHIP)	68.0 63M J RECT.	チップ抵抗			01
R306	**RD454100**	CARBON RESISTOR (CHIP)	10.0 63M J RECT.	チップ抵抗			01
R310	**RD454680**	CARBON RESISTOR (CHIP)	68.0 63M J RECT.	チップ抵抗			01
R311	**RD454680**	CARBON RESISTOR (CHIP)	68.0 63M J RECT.	チップ抵抗			01
R312	**RD45515R**	CARBON RESISTOR (CHIP)	150.0 63M J RECT.	チップ抵抗			01
R313	**RD454680**	CARBON RESISTOR (CHIP)	68.0 63M J RECT.	チップ抵抗			01
R316	**RD454220**	CARBON RESISTOR (CHIP)	22.0 63M J RECT.	チップ抵抗			
R317	**RD454220**	CARBON RESISTOR (CHIP)	22.0 63M J RECT.	チップ抵抗			
R321	**RD454680**	CARBON RESISTOR (CHIP)	68.0 63M J RECT.	チップ抵抗			01
R329	**RD454220**	CARBON RESISTOR (CHIP)	22.0 63M J RECT.	チップ抵抗			
R335	**RD454220**	CARBON RESISTOR (CHIP)	22.0 63M J RECT.	チップ抵抗			
R337	**RD454220**	CARBON RESISTOR (CHIP)	22.0 63M J RECT.	チップ抵抗			
R340	**RD454680**	CARBON RESISTOR (CHIP)	68.0 63M J RECT.	チップ抵抗			01
R342	**RD454680**	CARBON RESISTOR (CHIP)	68.0 63M J RECT.	チップ抵抗			01
R343	**RD454680**	CARBON RESISTOR (CHIP)	68.0 63M J RECT.	チップ抵抗			01
R354	**RD457100**	CARBON RESISTOR (CHIP)	10.0K 63M J RECT.	チップ抵抗			
R360	**RD45515R**	CARBON RESISTOR (CHIP)	150.0 63M J RECT.	チップ抵抗			01
R361	**RD454680**	CARBON RESISTOR (CHIP)	68.0 63M J RECT.	チップ抵抗			01
R362	**RD457100**	CARBON RESISTOR (CHIP)	10.0K 63M J RECT.	チップ抵抗			
R363	**RD454680**	CARBON RESISTOR (CHIP)	68.0 63M J RECT.	チップ抵抗			01
-365	**RD454680**	CARBON RESISTOR (CHIP)	68.0 63M J RECT.	チップ抵抗			01
R401	**RD454680**	CARBON RESISTOR (CHIP)	68.0 63M J RECT.	チップ抵抗			01
R406	**RD458470**	CARBON RESISTOR (CHIP)	470.0K 63M J RECT.	チップ抵抗			
R413	**RD454680**	CARBON RESISTOR (CHIP)	68.0 63M J RECT.	チップ抵抗			01
RA301	**WH205400**	RESISTOR ARRAY	22 X 4	抵抗アレイ			01
-304	**WH205400**	RESISTOR ARRAY	22 X 4	抵抗アレイ			01
RA311	**WH211800**	RESISTOR ARRAY	10K X 4	抵抗アレイ			01
RA313	**WH211800**	RESISTOR ARRAY	10K X 4	抵抗アレイ			01
RA314	**WH206000**	RESISTOR ARRAY	39 X 4	抵抗アレイ			01
-317	**WH206000**	RESISTOR ARRAY	39 X 4	抵抗アレイ			01
RA326	**WH205400**	RESISTOR ARRAY	22 X 4	抵抗アレイ			01
-334	**WH205400**	RESISTOR ARRAY	22 X 4	抵抗アレイ			01
RA341	**WH206600**	RESISTOR ARRAY	68 X 4	抵抗アレイ			01
RA342	**WH206600**	RESISTOR ARRAY	68 X 4	抵抗アレイ			01
RA344	**WH206600**	RESISTOR ARRAY	68 X 4	抵抗アレイ			01
RA346	**WH206600**	RESISTOR ARRAY	68 X 4	抵抗アレイ			01
-349	**WH206600**	RESISTOR ARRAY	68 X 4	抵抗アレイ			01
TR2	**VV556500**	TRANSISTOR	1037AK Q,R,S TP	トランジスタ 2SA			
TR2	**WC529500**	TRANSISTOR	KTA1504S-Y,GR-RTK/	トランジスタ			
TR3	**VV556400**	TRANSISTOR	2SC2412K Q,R,S TP	トランジスタ			
TR3	**WC529400**	TRANSISTOR	KTC3875S-Y,GR-RTK/	トランジスタ			
TR206	**VY67760R**	DIGITAL TRANSISTOR	DTC123JKA TP	デジタルトランジスタ			01
TR207	**VY67770R**	DIGITAL TRANSISTOR	DTB123YK T146	デジタルトランジスタ			01
TR207	**WG989900**	DIGITAL TRANSISTOR	KRA226S-RTK/P	デジタルトランジスタ			01
X201	**WH521200**	QUARTZ CRYSTAL UNIT 48MHZ	SG-310SCF 48M	水晶振動器			04
X201	**WM725500**	RESONATOR QUARTZ 48MHz	48M DSO321SR	水晶発振器			
X301	**WM135200**	RESONATOR QUARTZ	16.9344M DSX321G	水晶振動子			
	--	CIRCUIT BOARD	DCPJ	DCPJシート	(ZD30480)(YE683B0)		
					(ZE29910)		
	--	CIRCUIT BOARD	USB	USBシート	(ZD30480)(YE683B0)		
					(ZE29920)		
C4	**UR749680**	ELECTROLYTIC CAPACITOR	6800 25.0V FORM.	ケミコン			
CN1	**LB932020**	CONNECTOR	VH 2P TE	ベースポスト			
CN2	**VB390400**	CONNECTOR	PH 8P TE	ベースポスト			
CN3	**VB390000**	CONNECTOR	PH 4P TE	ベースポスト			
CN102	**VB390100**	CONNECTOR	PH 5P TE	ベースポスト			
CN104	**V902080R**	CONNECTOR	USB 4P SE	USBコネクタB	USB TO HOST		02
CN104	**ZC886500**	CONNECTOR	USB 4P SE	USBコネクタB			03
D9	**V9917100**	DIODE	S3V60-5004P15 FOR.	ダイオード			01
D10	**--**	JUMPER CABLE	0.55 TIN	ジャンパー線	(VA07890)		
J1	**--**	JUMPER CABLE	0.55 TIN	ジャンパー線	(VA07890)		
J7	**--**	JUMPER CABLE	0.55 TIN	ジャンパー線	(VA07890)		
JK1	**V487480R**	CONNECTOR	DINJACK6P MD-S6130	ミニDINコネクタ	TO PEDAL		02

＊: New Parts（新規部品）

RANK : Japan only

DCPJ,USB,HP,MK-L,MK-M,MK-H

REF NO.	PART NO.	DESCRIPTION		部品名	REMARKS	QTY	RANK
⚠ JK2	**V7509100**	CONNECTOR	DJ-0735D_029	電源コネクタ	DC IN 16V		02
L2	**V2993400**	COIL 20UH	R-5C TE-	チョークコイル			01
-5	**V2993400**	COIL 20UH	R-5C TE-	チョークコイル			01
⚠ L6	**ZC240800**	INDUCTOR	UF1815SG-800Y3R0-0	ラインフィルター			02
L7	**V2993400**	COIL 20UH	R-5C TE-	チョークコイル			01
L101	**V2993400**	COIL 20UH	R-5C TE-	チョークコイル			01
TH1	**VV45800R**	PROTECTOR SWITCH RUE250	RUEF250 2.50A 30V	ポリスイッチ			03
TR3	**ZC633500**	TRANSISTOR	2SB1568	トランジスタ 2SB			01
C10	**US065100**	CERAMIC CAPACITOR (CHIP)	0.100 50V Z RECT.	チップセラ F			
C13	**US065100**	CERAMIC CAPACITOR (CHIP)	0.100 50V Z RECT.	チップセラ F			
C14	**US062100**	CERAMIC CAPACITOR (CHIP)	100P 50V J RECT.	チップセラ(SL)			
-17	**US062100**	CERAMIC CAPACITOR (CHIP)	100P 50V J RECT.	チップセラ(SL)			
C18	**US065100**	CERAMIC CAPACITOR (CHIP)	0.100 50V Z RECT.	チップセラ F			
C21	**US065100**	CERAMIC CAPACITOR (CHIP)	0.100 50V Z RECT.	チップセラ F			
C101	**US062100**	CERAMIC CAPACITOR (CHIP)	100P 50V J RECT.	チップセラ(SL)			
C103	**US065100**	CERAMIC CAPACITOR (CHIP)	0.100 50V Z RECT.	チップセラ F			
C105	**US062100**	CERAMIC CAPACITOR (CHIP)	100P 50V J RECT.	チップセラ(SL)			
C106	**US062100**	CERAMIC CAPACITOR (CHIP)	100P 50V J RECT.	チップセラ(SL)			
D11	**VT332900**	DIODE	1SS355 TE-17 TP	ダイオード			
D12	**VT332900**	DIODE	1SS355 TE-17 TP	ダイオード			
R8	**RD357120**	CARBON RESISTOR (CHIP)	12.0K 63M J RECT.	チップ抵抗			
R9	**RD357470**	CARBON RESISTOR (CHIP)	47.0K 63M J RECT.	チップ抵抗			
R10	**RD357150**	CARBON RESISTOR (CHIP)	15.0K 63M J RECT.	チップ抵抗			
R11	**RD357470**	CARBON RESISTOR (CHIP)	47.0K 63M J RECT.	チップ抵抗			
R12	**RD357100**	CARBON RESISTOR (CHIP)	10.0K 63M J RECT.	チップ抵抗			
-16	**RD357100**	CARBON RESISTOR (CHIP)	10.0K 63M J RECT.	チップ抵抗			
TR4	**VV556400**	TRANSISTOR	2SC2412K Q,R,S TP	トランジスタ			
	--	CIRCUIT BOARD	HP	HPシート	(ZF15660)(XQ389C0) (ZF15680)		
C0001	**--**	JUMPER CABLE	0.55 TIN	ジャンパー線	(VA07890)		
C0002	**FG414100**	CERAMIC CAPACITOR	0.01UF 50V K	セラコン B			
-0005	**FG414100**	CERAMIC CAPACITOR	0.01UF 50V K	セラコン B			
C0002	**FG64410R**	CERAMIC CAPACITOR	0.0100 50V Z RX TP	セラコン(F)			01
-0005	**FG64410R**	CERAMIC CAPACITOR	0.0100 50V Z RX TP	セラコン(F)			01
C0006	**--**	JUMPER CABLE	0.55 TIN	ジャンパー線	(VA07890)		
C0007	**--**	JUMPER CABLE	0.55 TIN	ジャンパー線	(VA07890)		
CN001	**VB858600**	CONNECTOR	PH 7P SE	ベースポスト			
CN002	**VB858100**	CONNECTOR	PH 2P SE	ベースポスト			
CN003	**VB858200**	CONNECTOR	PH 3P SE	ベースポスト			
FL001	**GE300670**	FERRITE	BL02RN2R1P1A	フェライトビーズ			02
FL002	**GE300670**	FERRITE	BL02RN2R1P1A	フェライトビーズ			02
FL003	**--**	JUMPER CABLE	0.55 TIN	ジャンパー線	(VA07890)		
FL004	**GE300670**	FERRITE	BL02RN2R1P1A	フェライトビーズ			02
FL005	**GE300670**	FERRITE	BL02RN2R1P1A	フェライトビーズ			02
FL006	**--**	JUMPER CABLE	0.55 TIN	ジャンパー線	(VA07890)		
HP001	**LB101870**	CONNECTOR	JACK YKB21-5006	ホーンコネクタ	PHONES		03
HP001	**WJ306200**	CONNECTOR	MSJ-064-15A B AG	ホーンコネクタ			01
HP002	**LB101870**	CONNECTOR	JACK YKB21-5006	ホーンコネクタ	PHONES		03
HP002	**WJ306200**	CONNECTOR	MSJ-064-15A B AG	ホーンコネクタ			01
R0001	**VC728200**	METAL OXIDE FILM RESISTOR	10.0 1W J	酸化金属被膜抵抗			01
-0004	**VC728200**	METAL OXIDE FILM RESISTOR	10.0 1W J	酸化金属被膜抵抗			01
R0005	**--**	JUMPER CABLE	0.55 TIN	ジャンパー線	(VA07890)		
	WV760400	CIRCUIT BOARD	MK-L	MKーLシート	(WV35460)(YC333D0)		11
	WV760500	CIRCUIT BOARD	MK-M	MKーMシート	(WV35460)(YC333D0)		11
	WV760600	CIRCUIT BOARD	MK-H	MKーHシート	(WV35460)(YC333D0)		11
	YC778C00	IC	89FM42AUG-7GP2(JZ	IC	E-GKS		05
C1	**UF037100**	ELECTROLYTIC CAPACITOR(CHIP)	10 16V	チップケミコン			
C2	**US635100**	CERAMIC CAPACITOR (CHIP)	0.100 16V Z RECT.	チップセラ(F)			
C10	**US663100**	CERAMIC CAPACITOR (CHIP)	1000P 50V K RECT.	チップセラ(B)			01
C13	**US635100**	CERAMIC CAPACITOR (CHIP)	0.100 16V Z RECT.	チップセラ(F)			
C14	**US635100**	CERAMIC CAPACITOR (CHIP)	0.100 16V Z RECT.	チップセラ(F)			
C15	**US662100**	CERAMIC CAPACITOR (CHIP)	100P 50V J RECT.	チップセラ(CH)			
-25	**US662100**	CERAMIC CAPACITOR (CHIP)	100P 50V J RECT.	チップセラ(CH)			
C34	**US662100**	CERAMIC CAPACITOR (CHIP)	100P 50V J RECT.	チップセラ(CH)			
-37	**US662100**	CERAMIC CAPACITOR (CHIP)	100P 50V J RECT.	チップセラ(CH)			
C50	**US635100**	CERAMIC CAPACITOR (CHIP)	0.100 16V Z RECT.	チップセラ(F)			
C51	**US635100**	CERAMIC CAPACITOR (CHIP)	0.100 16V Z RECT.	チップセラ(F)			
CN1	**VK025600**	CONNECTOR	52147 12P TE	ワイヤートラップ			

＊: New Parts（新規部品）

RANK : Japan only

HP,MK-L,MK-M,MK-H,PEDAL,PL,PNL,PNR

REF NO.	PART NO.	DESCRIPTION		部品名	REMARKS	QTY	RANK
CN2	**VK025501**	CONNECTOR	52147 11P TE	ワイヤートラップ			01
CN3	**VB39030R**	CONNECTOR	PH 7P TE	ベースポスト			01
CN6	**VK025600**	CONNECTOR	52147 12P TE	ワイヤートラップ			
CN7	**VK025501**	CONNECTOR	52147 11P TE	ワイヤートラップ			01
CN101	**VK025600**	CONNECTOR	52147 12P TE	ワイヤートラップ			
CN102	**VK025501**	CONNECTOR	52147 11P TE	ワイヤートラップ			01
CN201	**VK025600**	CONNECTOR	52147 12P TE	ワイヤートラップ			
CN202	**VK025501**	CONNECTOR	52147 11P TE	ワイヤートラップ			01
D1	**V9599200**	DIODE	HSU119 TRF-E	チップダイオード			
-96	**V9599200**	DIODE	HSU119 TRF-E	チップダイオード			
D1	**VT332900**	DIODE	1SS355 TE-17 TP	ダイオード			
-96	**VT332900**	DIODE	1SS355 TE-17 TP	ダイオード			
D1	**WG139300**	DIODE	KDS4148U-RTK/P TE-	ダイオード			
-96	**WG139300**	DIODE	KDS4148U-RTK/P TE-	ダイオード			
D99	**V9599200**	DIODE	HSU119 TRF-E	チップダイオード			
-184	**V9599200**	DIODE	HSU119 TRF-E	チップダイオード			
D99	**VT332900**	DIODE	1SS355 TE-17 TP	ダイオード			
-184	**VT332900**	DIODE	1SS355 TE-17 TP	ダイオード			
D99	**WG139300**	DIODE	KDS4148U-RTK/P TE-	ダイオード			
-184	**WG139300**	DIODE	KDS4148U-RTK/P TE-	ダイオード			
D201	**V9599200**	DIODE	HSU119 TRF-E	チップダイオード			
-290	**V9599200**	DIODE	HSU119 TRF-E	チップダイオード			
D201	**VT332900**	DIODE	1SS355 TE-17 TP	ダイオード			
-290	**VT332900**	DIODE	1SS355 TE-17 TP	ダイオード			
D201	**WG139300**	DIODE	KDS4148U-RTK/P TE-	ダイオード			
-290	**WG139300**	DIODE	KDS4148U-RTK/P TE-	ダイオード			
L1	**V2747000**	CHIP INDUCTANCE	BLM18PG600SN1	チップインダクタ			
R5	**RD454470**	CARBON RESISTOR (CHIP)	47.0 63M J RECT.	チップ抵抗			01
R6	**RD454470**	CARBON RESISTOR (CHIP)	47.0 63M J RECT.	チップ抵抗			01
R7	**RD456100**	CARBON RESISTOR (CHIP)	1.0K 63M J RECT.	チップ抵抗			
R17	**RD457100**	CARBON RESISTOR (CHIP)	10.0K 63M J RECT.	チップ抵抗			
R18	**RD457220**	CARBON RESISTOR (CHIP)	22.0K 63M J RECT.	チップ抵抗			01
R19	**RD457220**	CARBON RESISTOR (CHIP)	22.0K 63M J RECT.	チップ抵抗			01
R20	**RD457100**	CARBON RESISTOR (CHIP)	10.0K 63M J RECT.	チップ抵抗			
R25	**RD45000R**	CARBON RESISTOR (CHIP)	0.00 63M J RECT.	チップ抵抗			01
RA1	**WH212600**	RESISTOR ARRAY	22K X 4	抵抗アレイ			01
-4	**WH212600**	RESISTOR ARRAY	22K X 4	抵抗アレイ			01
X1	**V9864200**	CERAMIC RESONATOR	10.0M CSTCE10M0G52	セラミック発振子			
	WP029200	CIRCUIT BOARD	PEDAL	PEDALシート	(WQ65870)(X9561D0)		05
CN1	**VB858500**	CONNECTOR	PH 6P SE	ベースポスト			
VR1	**WN154400**	VR ROTARY	B 10.0K RK09Y11L00	ロータリーVR 1連	DAMPER		03
	VU65910R	CIRCUIT BOARD	PL	PLシート	(VU65900)(XR898A0)		03
	VB858100	CONNECTOR	PH 2P SE	ベースポスト			
LED	**VD18000R**	LED RED	SLZ-190B-03-T2	LED	POWER indicator		01
LED	**WM285600**	LED RED	HFR223P-BW12	LED			01
	ZA500400	CIRCUIT BOARD	PNL	PNLシート	(ZA50220)(YE108C0)		08
	ZA500500	CIRCUIT BOARD	PNR	PNRシート	(ZA50220)(YE108C0)		08
CN1	**VC16650R**	CONNECTOR	PH 12P SE	ベースポスト			01
CN3	**VB858400**	CONNECTOR	PH 5P SE	ベースポスト			
VR1	**VQ67050R**	ROTARY POT. B10K	B 10K RK11K1130A0M	ロータリーボリューム	MASTER VOLUME		02
LD1	**WP377400**	LED GREEN	SLR-343MGT32	LED	+/R		01
LD2	**WP377400**	LED GREEN	SLR-343MGT32	LED	-/L		01
LD3	**WE864300**	LED RED	SLR-343VCT32	LED	REC		01
LD4	**WP377400**	LED GREEN	SLR-343MGT32	LED	PLAY		01
SW1	**WG31840R**	TACT SWITCH	SKRGAMD010	タクトSW	DEMO/SONG		01
SW2	**WG31840R**	TACT SWITCH	SKRGAMD010	タクトSW	PIANO/VOICE		01
SW3	**WG31840R**	TACT SWITCH	SKRGAMD010	タクトSW	METRONOME		01
SW4	**WG31840R**	TACT SWITCH	SKRGAMD010	タクトSW	+/R		01
SW5	**WG31840R**	TACT SWITCH	SKRGAMD010	タクトSW	-/L		01
SW6	**WG31840R**	TACT SWITCH	SKRGAMD010	タクトSW	REC		01
SW7	**WG31840R**	TACT SWITCH	SKRGAMD010	タクトSW	PLAY		01
SW8	**WG31840R**	TACT SWITCH	SKRGAMD010	タクトSW	STANDBY/ON		01
*	**YF774A00**	LOUD SPEAKER	6X12cm 4ohm 10W	スピーカ			

＊: New Parts（新規部品）

RANK : Japan only

Clavinova®

CLP-525B/CLP-525R/CLP-525PE

OVERALL CIRCUIT DIAGRAM



CLP-525B



CLP-525R



CLP-525PE

- BLOCK DIAGRAM & CIRCUIT BOARD LAYOUT & WIRING 1
- CIRCUIT BOARD LAYOUT & WIRING 2
- OVERALL CIRCUIT DIAGRAM 1/4 (DM 1/2) 3
- OVERALL CIRCUIT DIAGRAM 2/4 (DM 2/2) 4
- OVERALL CIRCUIT DIAGRAM 3/4 (DCPJ, HP, PEDAL, PL, PNL, PNR, USB) 5
- OVERALL CIRCUIT DIAGRAM 4/4 (MK-H, MK-L, MK-M) 6

CL 001897

YAMAHA
HAMAMATSU, JAPAN
AM①Printed in Japan '14.01

CLP-525B/CLP-525R/CLP-525PE BLOCK DIAGRAM

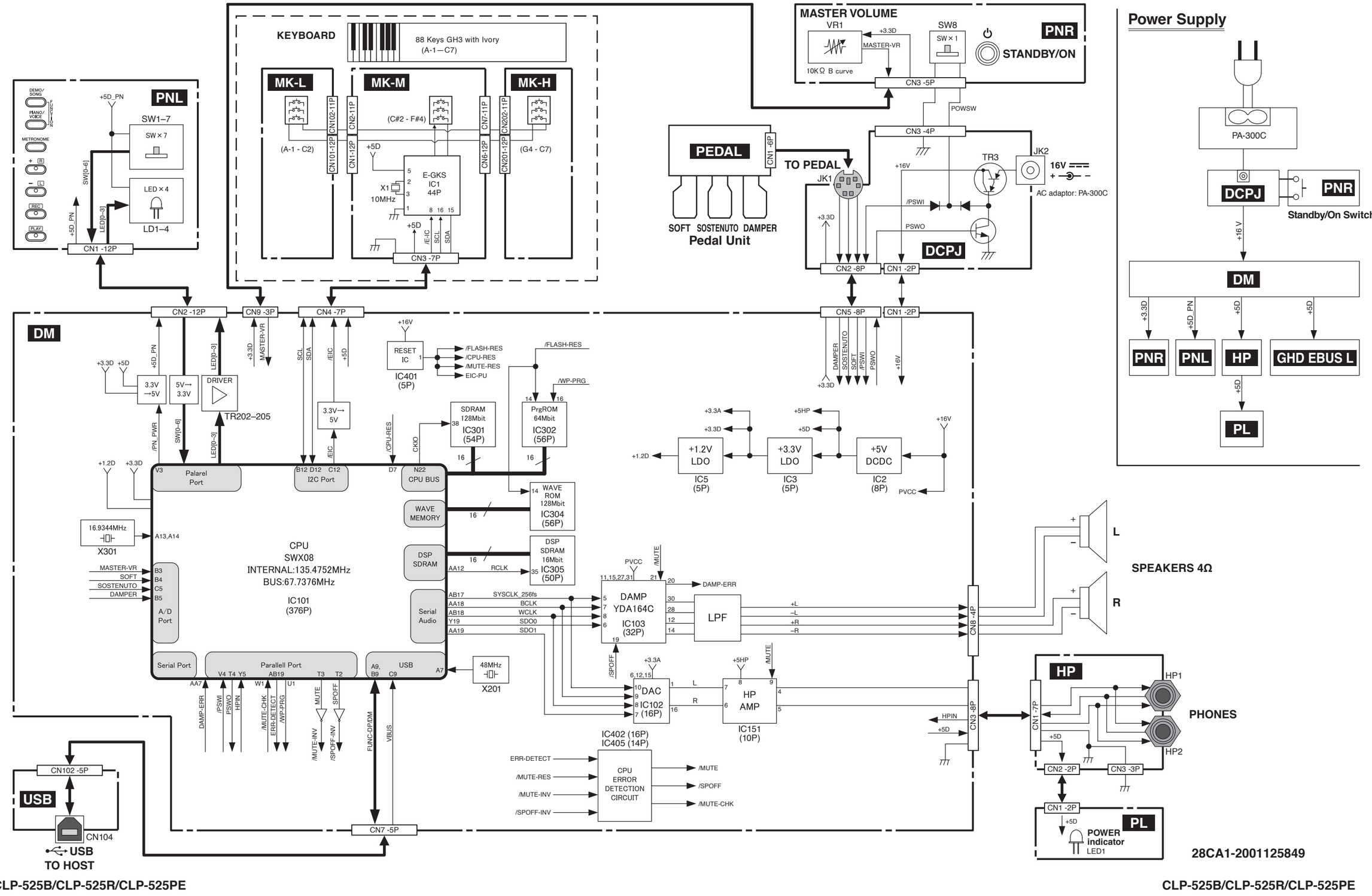

28CA1-2001125849

CLP-525B/CLP-525R/CLP-525PE

■ CLP-525B/CLP-525R/CLP-525PE CIRCUIT BOARD LAYOUT & WIRING

①

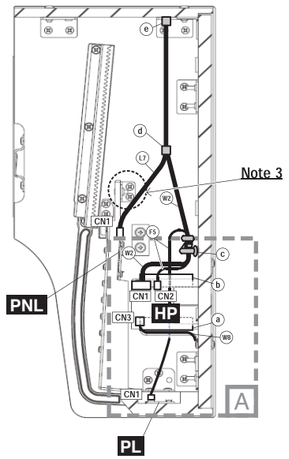

②

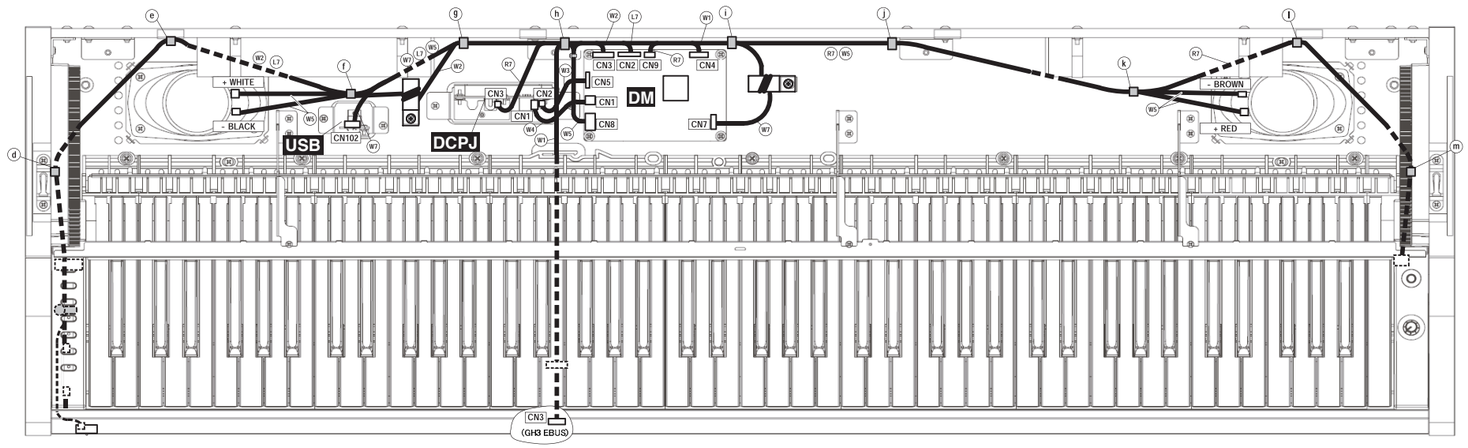

③

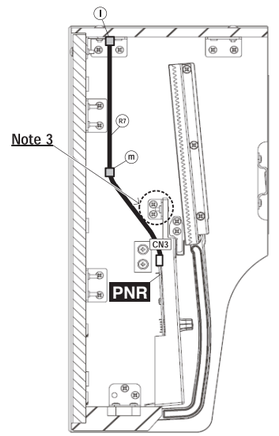

: Insulation Lock Tie
: Filament Tape
: Cord Binder
: Cable Holder

A

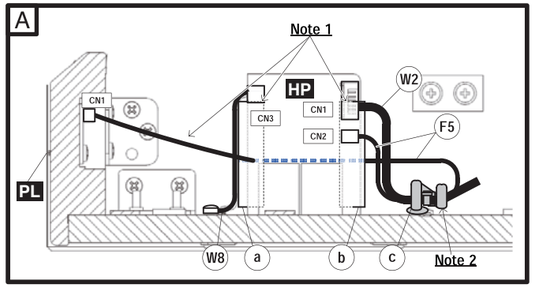

The direction of drawing is as follows.

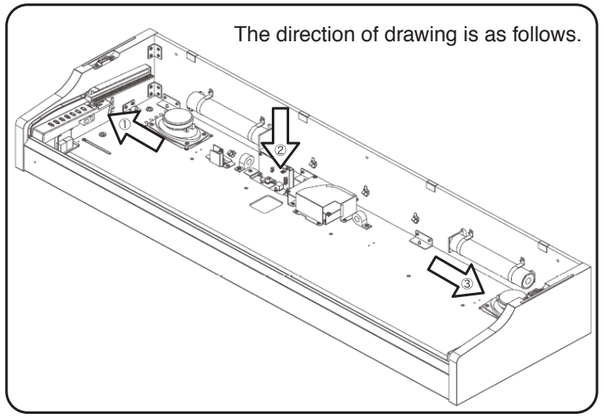

Note 1 :

(F5) is fixed to along Side Arm with Filament tape (a) (b).
Then, don't loose to not touch electric parts leads of PCB ASSY HP.

Note 2 :

Insulation Lock Tie of (F5) and (W2) must be fixed like pinching by (c) as following figures.

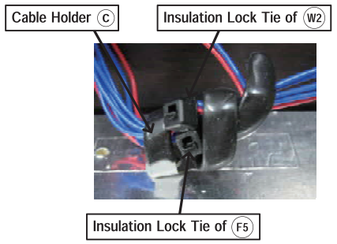

Note 3 :

(L7) (R7) must be through under the bracket, with no interference with the screw.

Note 4 :

All Wiring Assy must not be touched Keyboard Hammer.

2NC-ZG86280-3

Location No.	Part No.	Connector Assembly	Destination		Fix Position	There is no slack between following points	Remarks	
(F5)	(ZH57280)	PL	PL - CN1	HP - CN2	(a)(b)(c)	–	2P L=270	FRONT RAIL ASSEMBLY
(L7)	(ZD98780)	PNL	PNL - CN1	DM - CN2	(d)(e)(f)(g)(h)	PNL - CN1 – (h)	12P L=750	KEYBLOCK ASSEMBLY L
(R7)	(ZD98790)	PNR	PNR - CN3	DM - CN9 DCPJ - CN3	(m)(l)(k)(j)(i) (m)(l)(k)(j)(i)(h)	PNR - CN3 – (i) PNR - CN3 – (h)	5P–3P L=920 5P–4P L=1110	KEYBLOCK ASSEMBLY R
(W1)	(WF42620)	KB	MK-M - CN3	DM - CN4	(h)	–	7P L=500	
(W2)	(ZD98810)	HP	HP - CN1	DM - CN3	(c)(d)(e)(f)(g)(h)	(c) – (f), Ferrite core – (h)	7P–8P L=950	
(W3)	(ZE69250)	PDERP	DCPJ - CN2	DM - CN5	–	–	8P L=90	
(W4)	(ZD98820)	DC	DCPJ - CN1	DM - CN1	–	–	2P L=100	
(W5)	(ZD98830)	SP	Speaker R Speaker L	DM - CN8 (1,2P) DM - CN8 (3,4P)	(k)(j)(i) (f)(g)(h)	Speaker R – (i) Speaker L – (h)	4P L=700	
(W7)	(ZF30770)	USB	DM - CN7	USB - CN102	(g)(h)(i)	USB - CN102 – (i)	5P L=700	
(W8)	(ZF38590)	GND	HP - CN3	Keybed	–	–	3P L=60	

2NC-ZG86280-4

CLP-525B/CLP-525R/CLP-525PE OVERALL CIRCUIT DIAGRAM 1/4 (DM 1/2)

DM 1/2

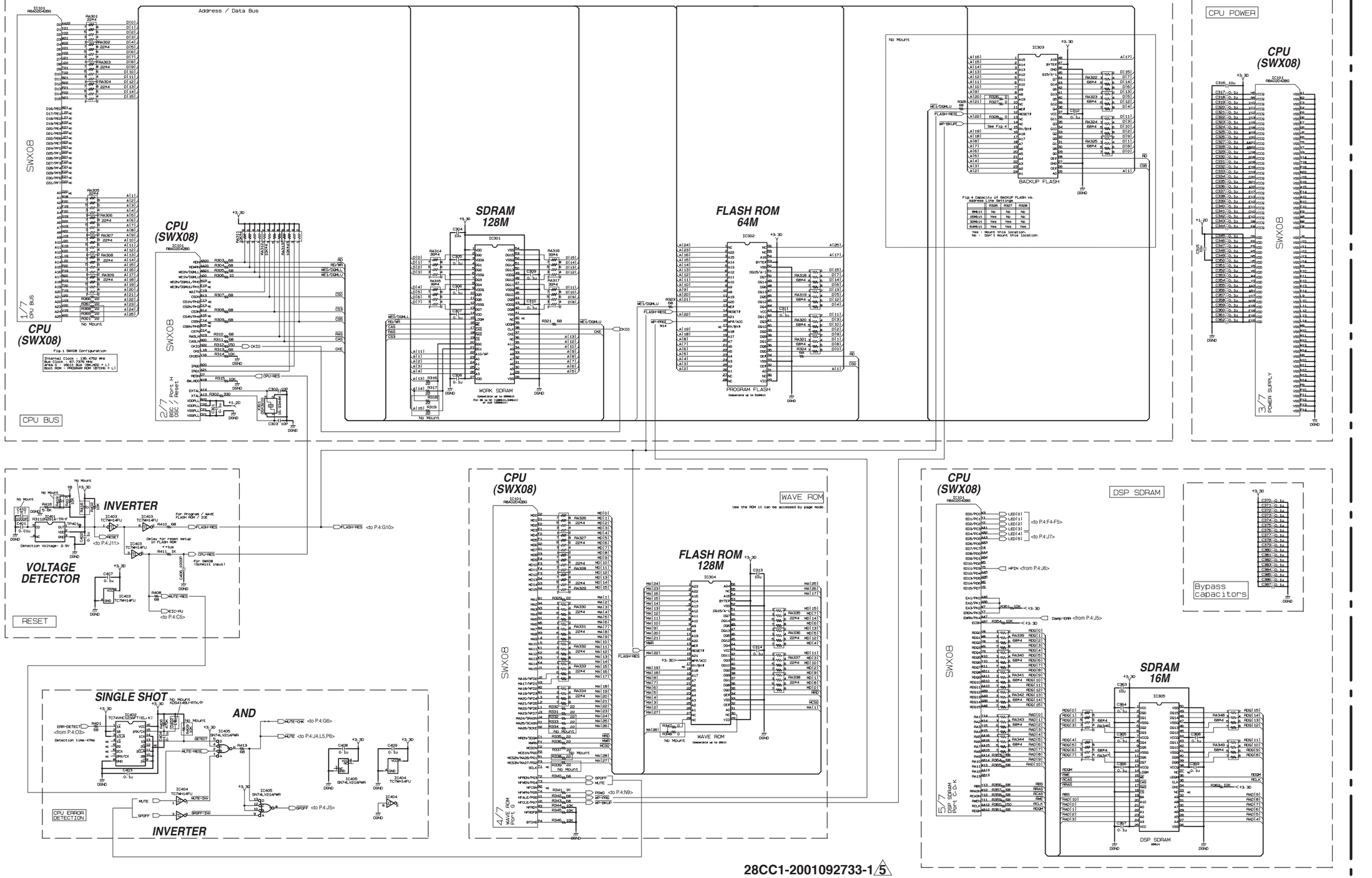

28CC1-2001092733-1/5

CLP-525B/CLP-525R/CLP-525PE OVERALL CIRCUIT DIAGRAM 2/4 (DM 2/2)

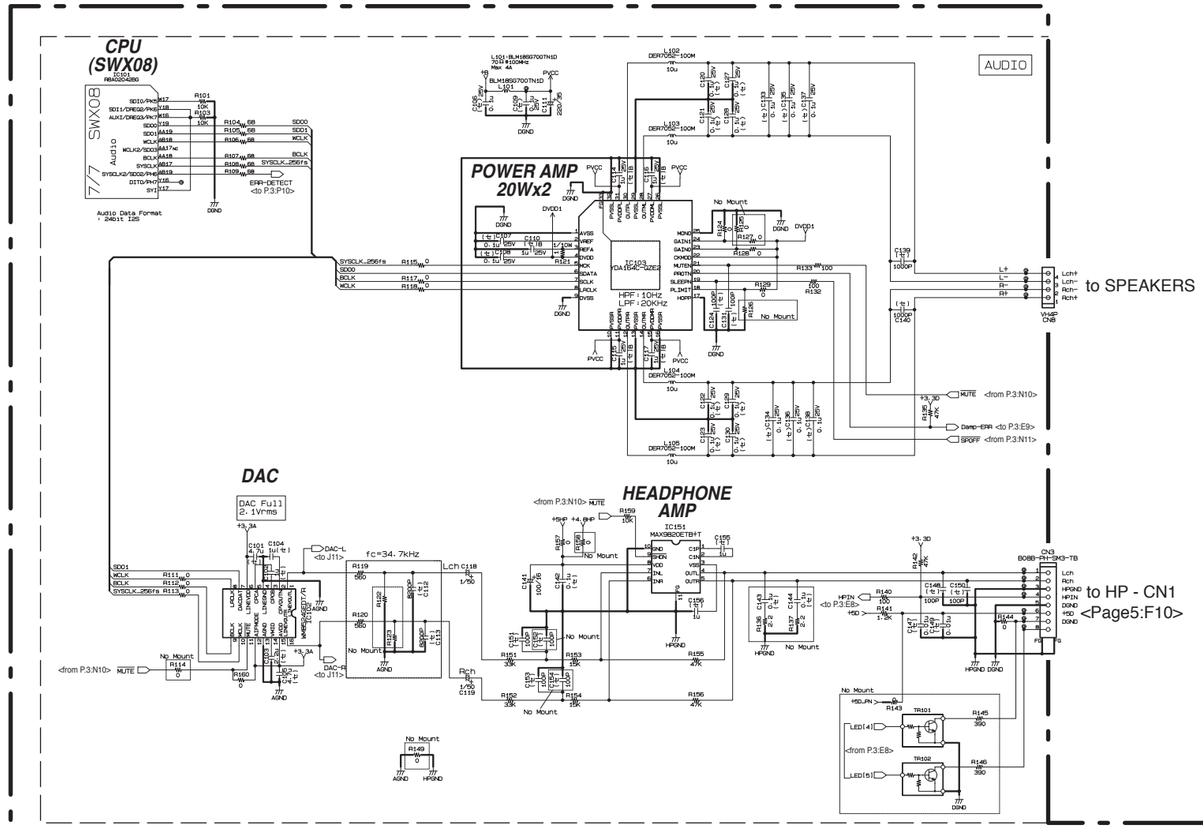

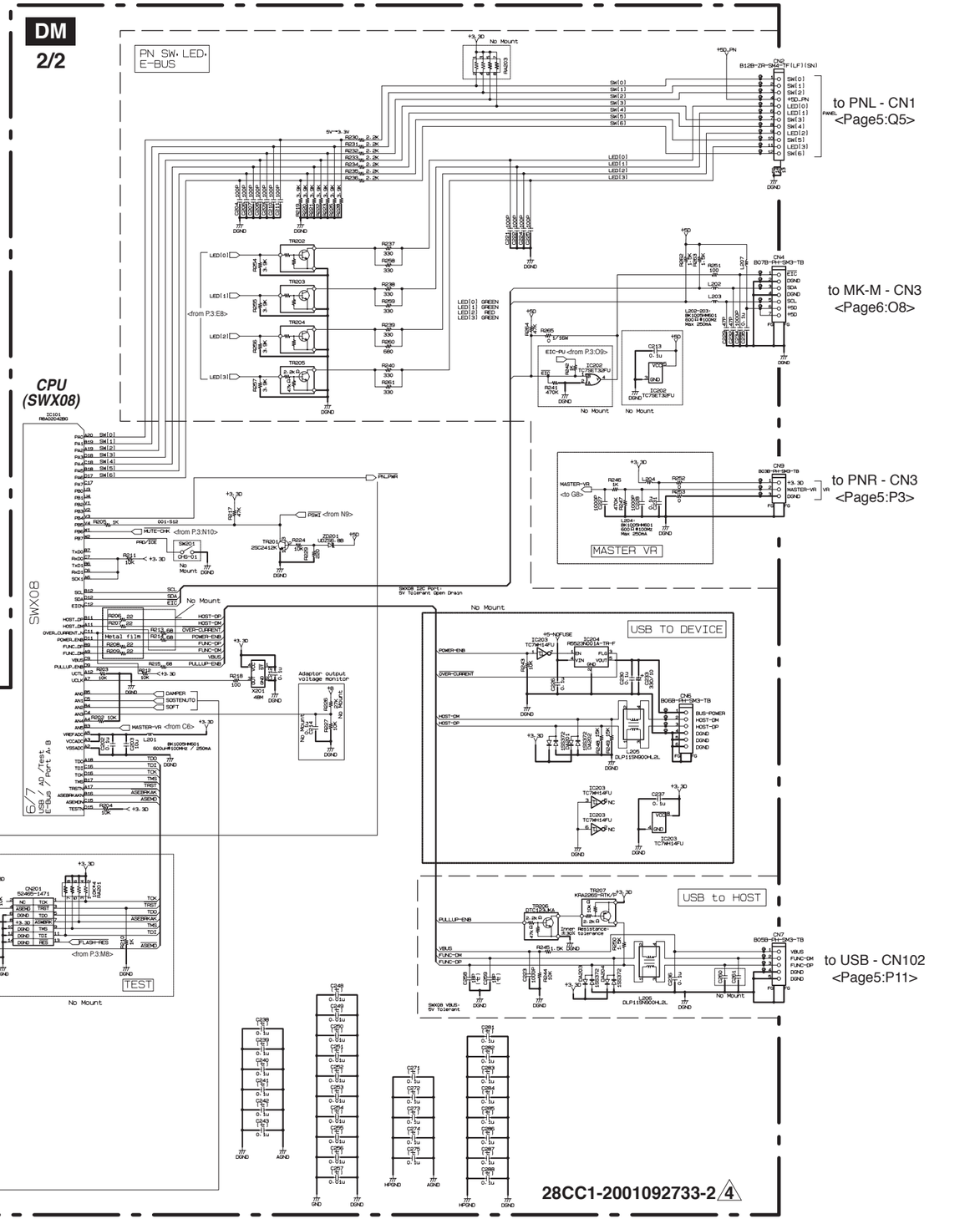

28CC1-2001092733-2 4

< Page 5 >

■ CLP-525B/CLP-525R/CLP-525PE OVERALL CIRCUIT DIAGRAM 3/4 (DCPJ, HP, PEDAL, PL, PNL, PNR, USB)

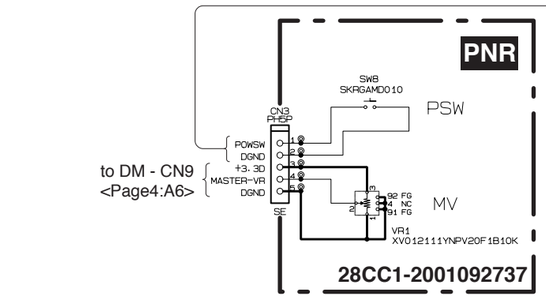

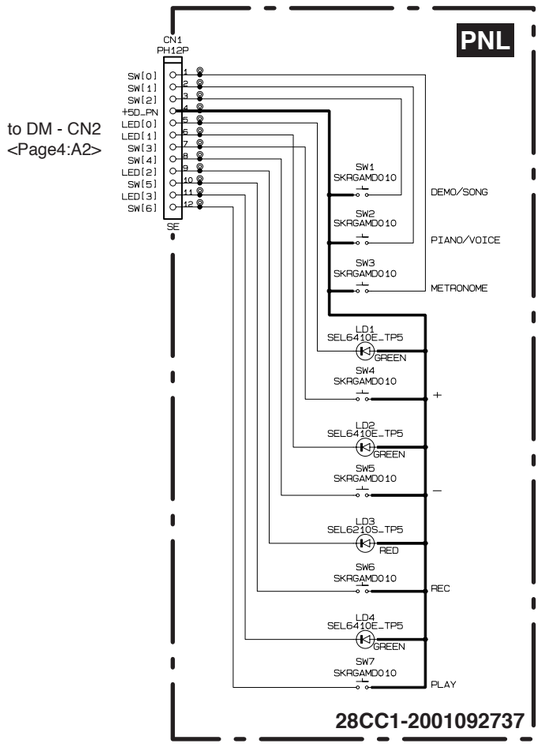

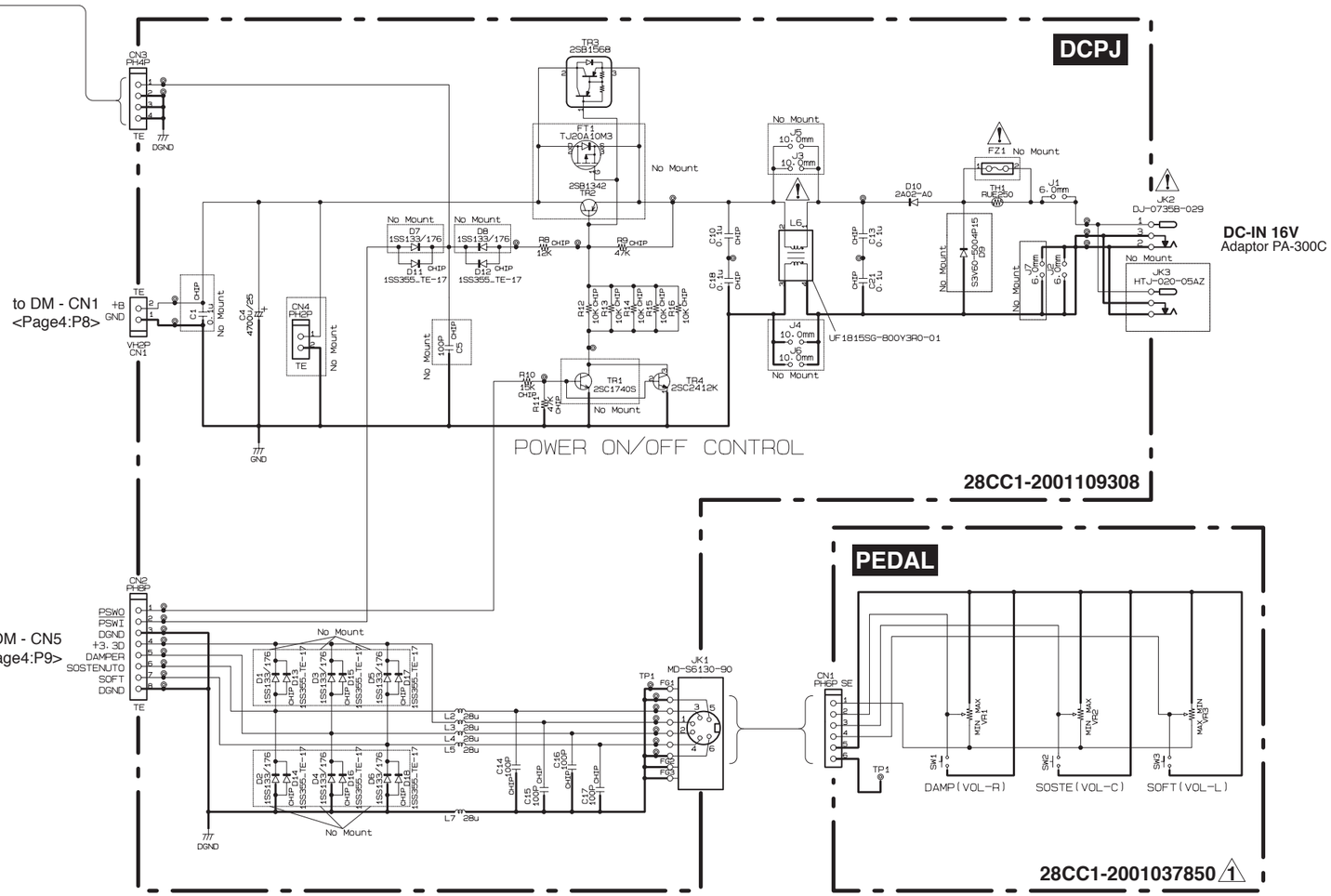

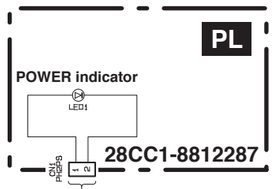

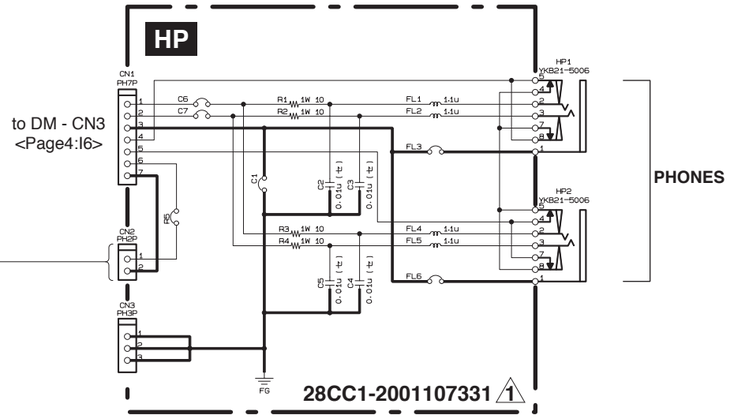

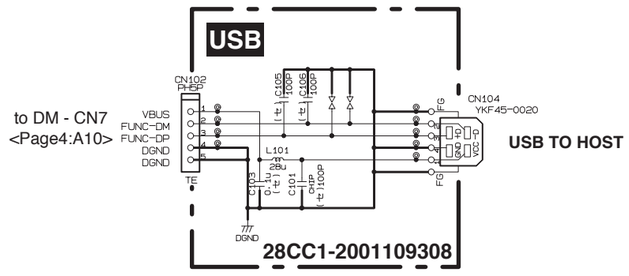

■ CLP-525B/CLP-525R/CLP-525PE OVERALL CIRCUIT DIAGRAM 4/4 (MK-H, MK-L, MK-M)

MK-M (C#2 - F#4)

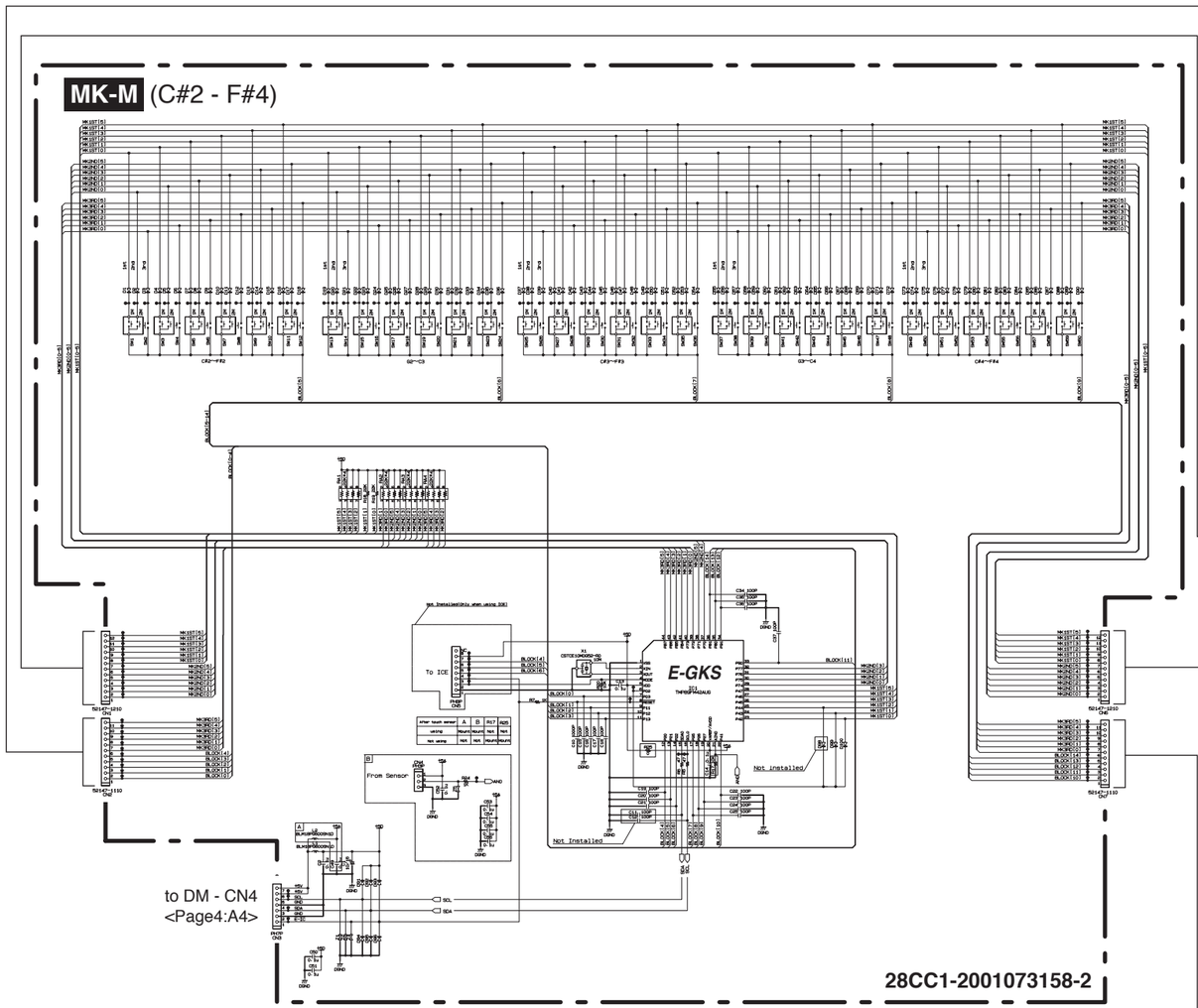

28CC1-2001073158-2

MK-L (A-1 - C2)

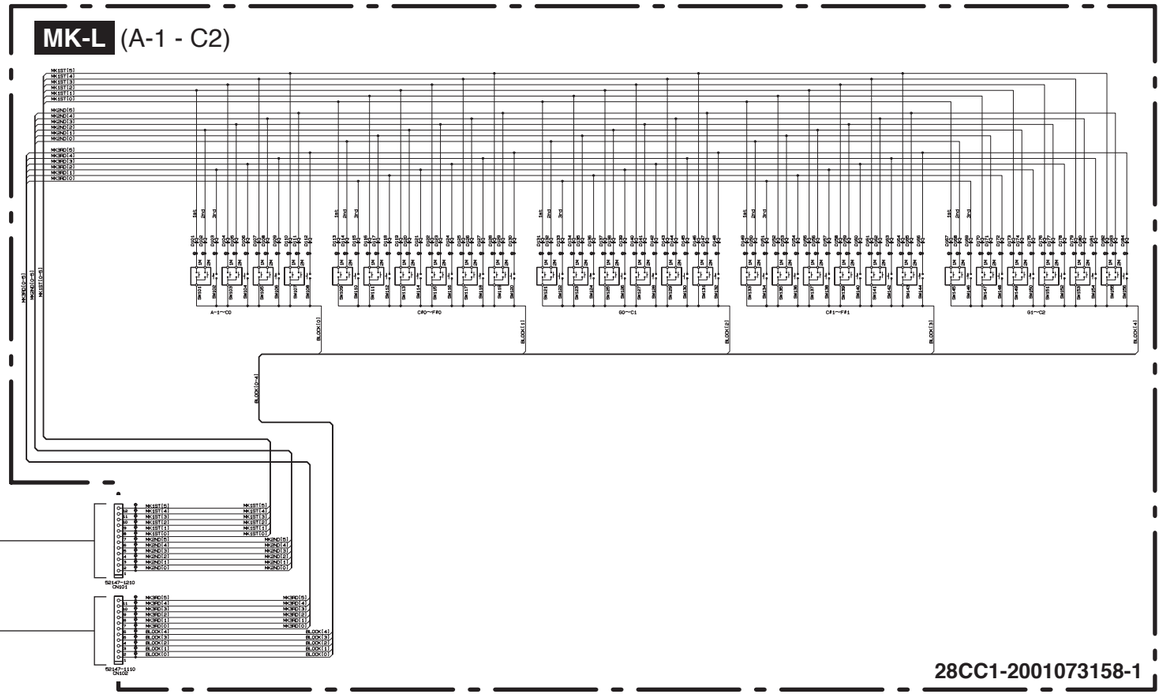

28CC1-2001073158-1

MK-H (G4 - C7)

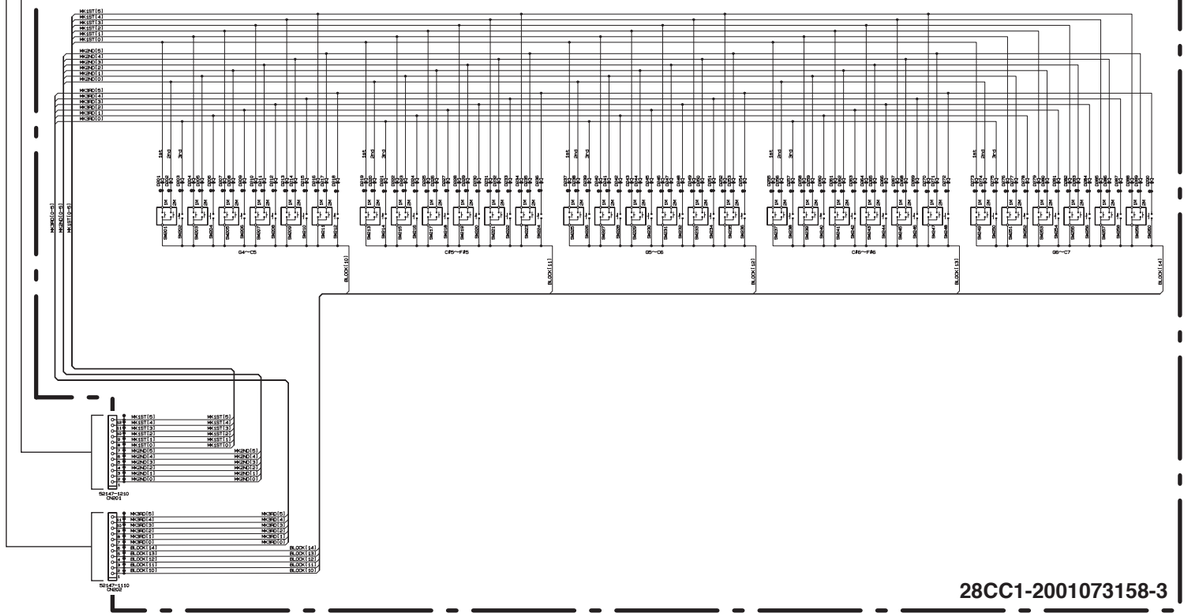

28CC1-2001073158-3