Clavinova

CLP-360

SERVICE MANUAL



■CONTENTS (目次)

SPECIFICATIONS (総合仕様) 2
PANEL LAYOUT (パネルレイアウト) 2
CIRCUIT BOARD LAYOUT (ユニットレイアウト) 4
BLOCK DIAGRAM (ブロックダイアグラム) 6
DISASSEMBLY PROCEDURE (分解手順) 8
LSI PIN DESCRIPTION (LSI 端子機能表) 14
IC BLOCK DIAGRAM (IC ブロック図) 18
CIRCUIT BOARDS (シート基板図) 20
TEST PROGRAM (テストプログラム) 26
MIDI DATA FORMAT 28
MIDI IMPLEMENTATION CHART 29
PARTS LIST

CLP-360

SK 001429

YAMAHA CORP.
HAMAMATSU, JAPAN
3.615K-713 Printed in Japan '90.9

IMPORTANT NOTICE

This manual has been provided for the use of authorized Yamaha Retailers and their service personnel. It has been assumed that basic service procedures inherent to the industry, and more specifically Yamaha Products, are already known and understood by the users, and have therefore not been restated.

WARNING: Failure to follow appropriate service and safety procedures when servicing this product may result in personal injury, destruction of expensive components and failure of the product to perform as specified. For these reasons, we advise all Yamaha product owners that all service required should be performed by an authorized Yamaha Retailer or the appointed service representative.

IMPORTANT: The presentation or sale of this manual to any individual or firm does not constitute authorization, certification, recognition of any applicable technical capabilities, or establish a principle-agent relationship of any form.

The data provided is believed to be accurate and applicable to the unit(s) indicated on the cover. The research, engineering, and service departments of Yamaha are continually striving to improve Yamaha products. Modifications are, therefore, inevitable and changes in specification are subject to change without notice or obligation to retrofit. Should any discrepancy appear to exist, please contact the distributor's Service Division.

WARNING: Static discharges can destroy expensive components. Discharge any static electricity your body may have accumulated by grounding yourself to the ground buss in the unit (heavy gauge black wires connect to this buss).

IMPORTANT: Turn the unit OFF during disassembly and parts replacement. Recheck all work before you apply power to the unit.

WARNING: CHEMICAL CONTENT NOTICE!

The solder used in the production of this product contains LEAD. In addition, other electrical/electronic and/or plastic (where applicable) components may also contain traces of chemicals found by the California Health and Welfare Agency (and possibly other entities) to cause cancer and/or birth defects or other reproductive harm.

DO NOT PLACE SOLDER, ELECTRICAL/ELECTRONIC OR PLASTIC COMPONENTS IN YOUR MOUTH FOR ANY REASON WHAT SO EVER!

Avoid prolonged, unprotected contact between solder and your skin! When soldering, do not inhale solder fumes or expose eyes to solder/flux vapor!.

If you come in contact with solder or components located inside the enclosure of this product, wash your hands before handling food.

CLP-360

■SPECIFICATIONS（総合仕様）

	CLP-360
KEYBOARD	88 KEYS (A-1 ~ C7)
VOICE SELECTORS	PIANO 1/2, CLAVINOVA TONE, E.PIANO, HARPSICHORD, ORGAN
REVERB	Type: PEDAL, ROOM, HALL
PLAY MODES	NORMAL, DUAL
PEDAL CONTROLS	DAMPER, SOFT/SOSTENUTO
OTHER CONTROLS	MASTER VOLUME, MIDI/TRANSPOSE
JACKS/CONNECTORS	HEADPHONES, OPTIONAL IN L/R, OPTIONAL OUT L/R, MIDI IN/OUT/THRU
INPUT &OUTPUT LEVEL/IMPEDANCE	OPTIONAL OUT: 600 Ω/1~4 Vpp OPTIONAL IN: 22 kΩ/-10 dBm (for nominal output level)
MAIN AMPLIFIERS	15 W x 2
SPEAKERS	16 cm x 2
DIMENSIONS	1418 x 467 x 804 mm
WEIGHT	46.0 kg (101.4 lbs.)

● OUTPUT LEVEL : HEADPHONES : +13 ±3 dBm
OPTIONAL OUT : −2 ±3 dbm
(When a sine wave of A3 sounds on test program mode. See "TEST PROGRAM" on this manual.)

■総合仕様

●鍵盤： 88鍵(A_{-1}～C_7)イニシャルタッチ付
●音色： ピアノ1、ピアノ2、クラビノーバトーン、エレクトリックピアノ、ハープシコード、オルガン
●効果・機能： リバーブ、トランスポーズ、ピッチコントロール、デュアル
●コントロール：電源スイッチ、ボリューム、ソフト／ソステヌートペダル、ダンパーペダル
●付属端子： ヘッドホン端子、オプショナル端子 IN(L, R)、OUT(L, R)、MIDI端子(IN, OUT, THRU)
●メインアンプ：15W×2
●スピーカー： 16cm×2
●定格電源： AC100V 50/60Hz
●消費電力： 35W
●外装： 仕上げ；ブラック／ブラックローズウッド調仕上げ、
間口…141.8cm、奥行…46.7cm
高さ…80.4cm、重量… 46kg
●装備： 折りたたみ式譜面立て
●付属品： トップカバー、キーカバー
●出力レベル： ヘッドホン端子 ：+13±3dBm
OPTIONAL OUT端子：−2±3dBm
(テストプログラムにおいて、A3のサイン波発音時。テストプログラムの項を参照。)

■PANEL LAYOUT（パネルレイアウト）

● Front Panel（フロントパネル）

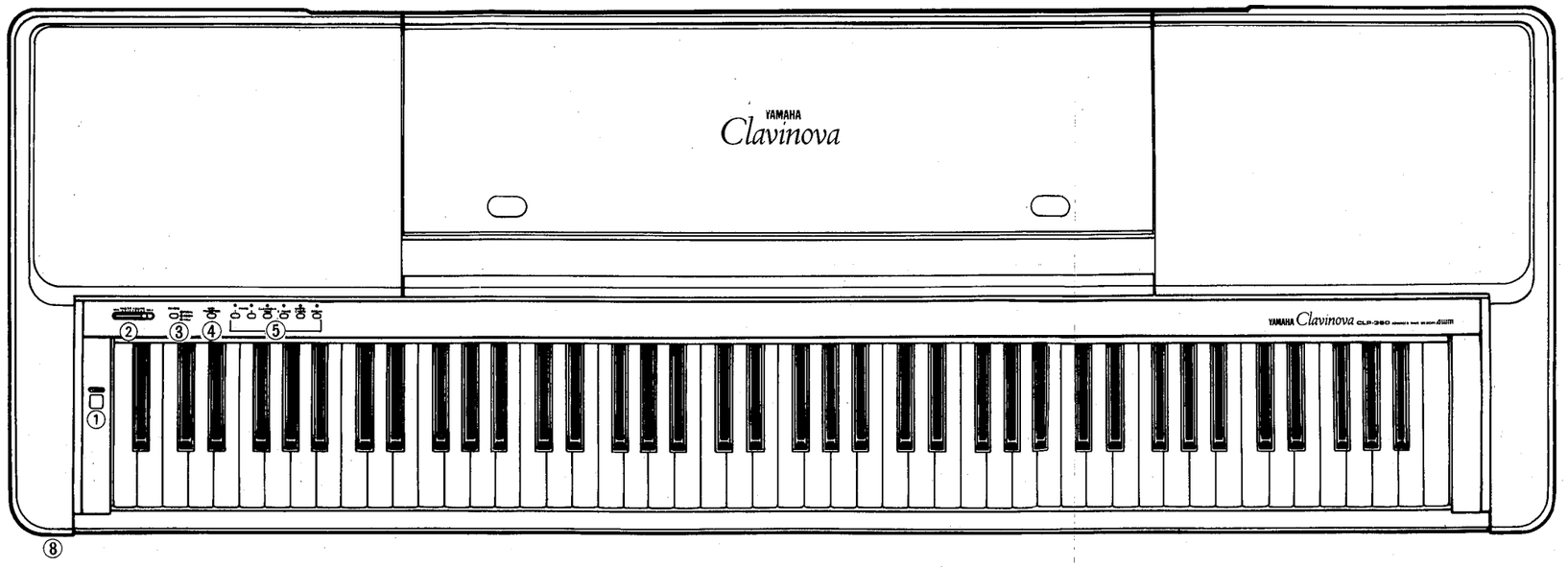

● Control Panel（コントロールパネル）



● Rear Panel（リアパネル）

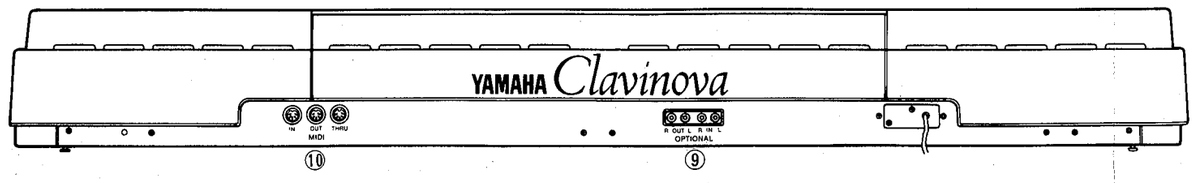

● Pedal（ペダル）

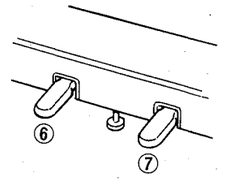

① [POWER] Switch
② [MASTER VOLUME] Control
③ [REVERB] Button
④ [MIDI/TRANSPOSE] Button
⑤ Voice Selectors
⑥ Soft/Sostenuto Pedal
⑦ Damper Pedal
⑧ HEADPHONE Jack
⑨ OPTIONAL IN L/R and OUT L/R Jacks
⑩ MIDI IN, THRU and OUT Connectors

① POWER スイッチ
② MASTER VOLUME コントロール
③ REVERB ボタン
④ MIDI/TRANSPOSE ボタン
⑤ ボイスセレクター
⑥ ソフト/ソステヌートペダル
⑦ ダンパーペダル
⑧ ヘッドホンジャック
⑨ OPTIONAL IN L, R と OUT L, R ジャック
⑩ MIDI IN, THRU, OUT 端子

CLP-360

■CIRCUIT BOARD LAYOUT（ユニットレイアウト）

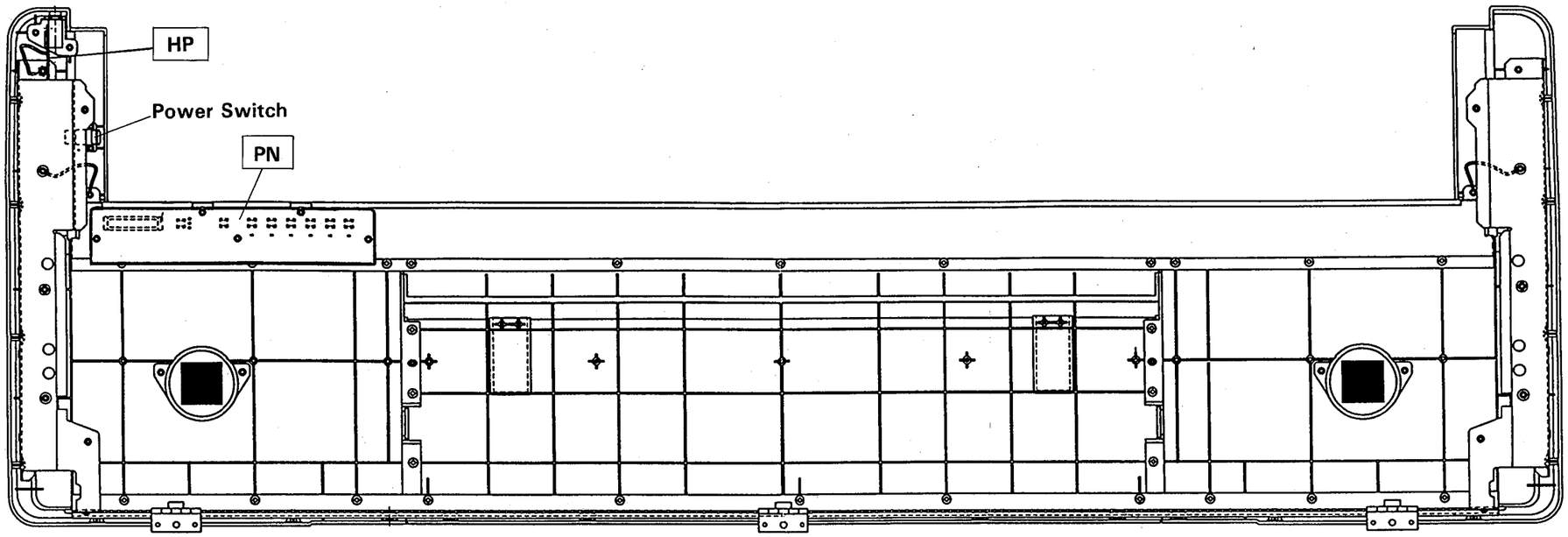

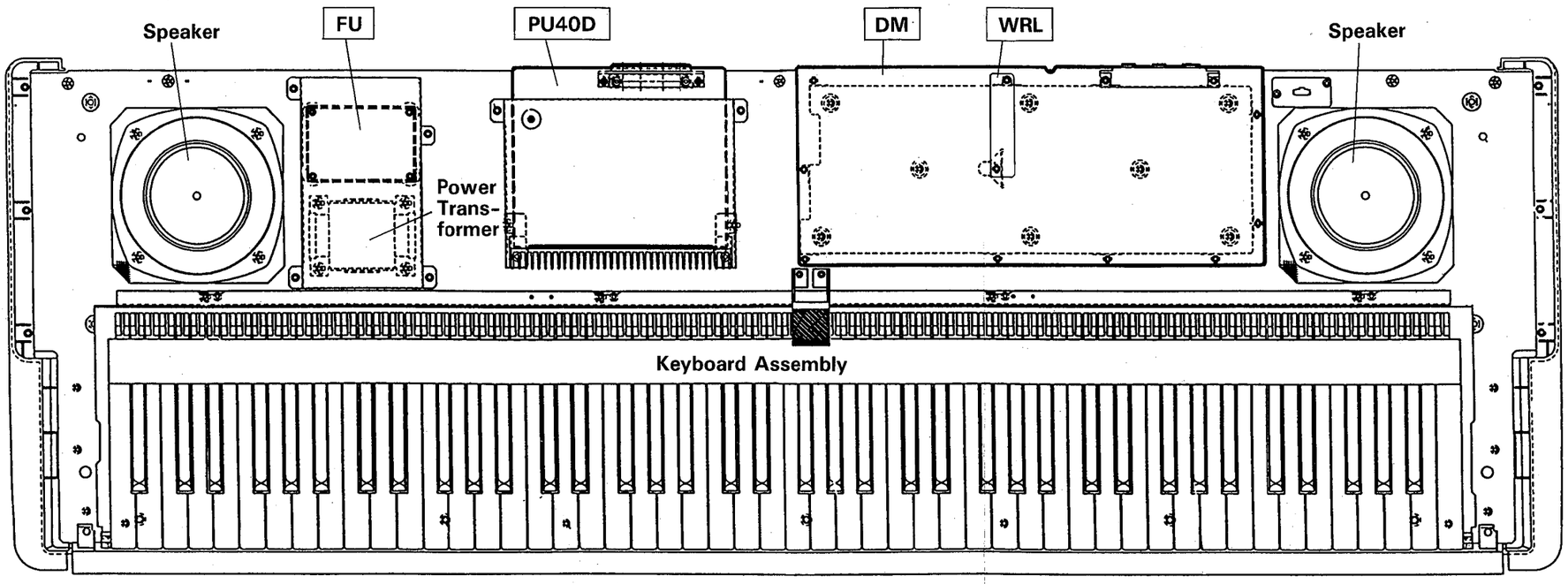

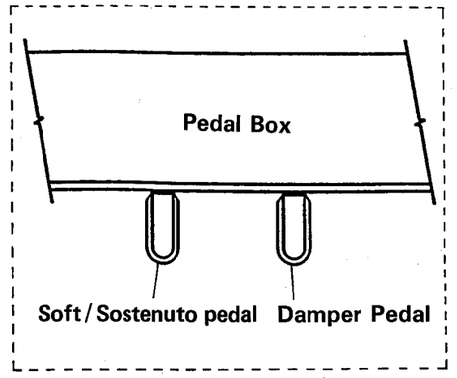

CLP-360

■BLOCK DIAGRAM（ブロックダイアグラム）

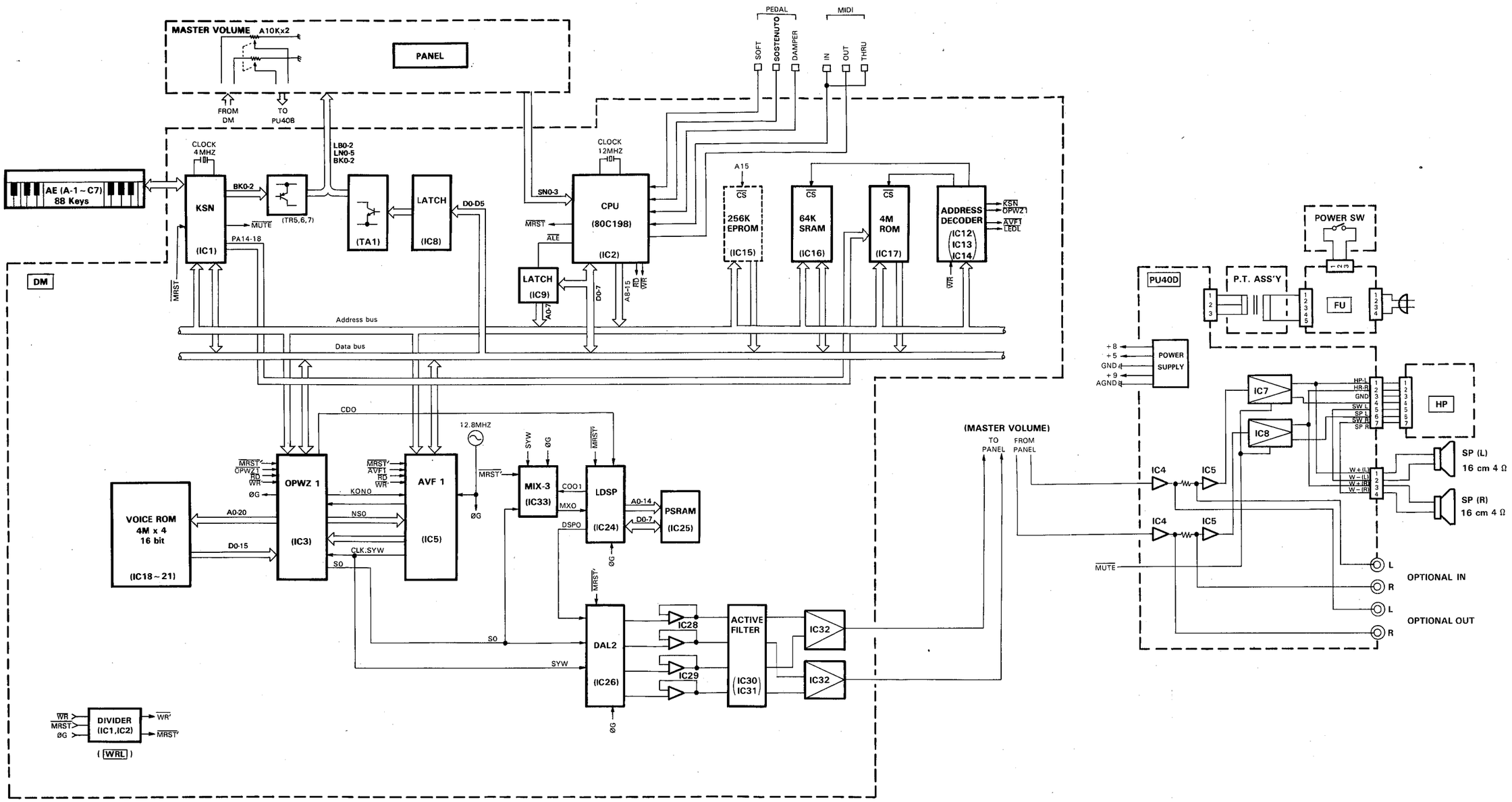

■DISASSEMBLY PROCEDURE（分解手順）

1 Opening the Top Board

1-1 Remove the keyboard cover assembly.

1-2 Remove the four (4) screws marked in the figure as Ⓐ (4.0X20 bind head screw) (Fig. 1)

1-3 Lift the top board from the front and pass strings through two angle brackets and both end of the front rail so that hinges are not damaged as shown in the figure. (Fig. 2)

CAUTION: MAKING SURE THAT THE TOP BOARD CAN NOT FALL.

This will give you access to the DM, WRL, FU, PN and HP circuit boards.

1 屋根の開け方

1-1 鍵蓋Ass'yを、外しておきます。

1-2 Ⓐのネジ4本(4.0×20バインド小ネジ)を外します。(図1参照)

1-3 屋根の手前側を持ち、矢印の方向に回転させながら開けます。(図2参照)

注1) 屋根を開き過ぎて背面の蝶番を壊さないように、腕木金具（左、右）と口金Ass'yの両端をそれぞれ紐で結び、屋根を固定します。(図2参照)

注2)屋根を開けると以下の項目をチェック出来ます。

Ⅰ) DMシートの部品側

Ⅱ) PNシートパターン側

Ⅲ) FUシートの部品側

Ⅳ) HPシートの部品側とパターン側

Ⅴ) WRLシートの部品側

Under View（下側より）

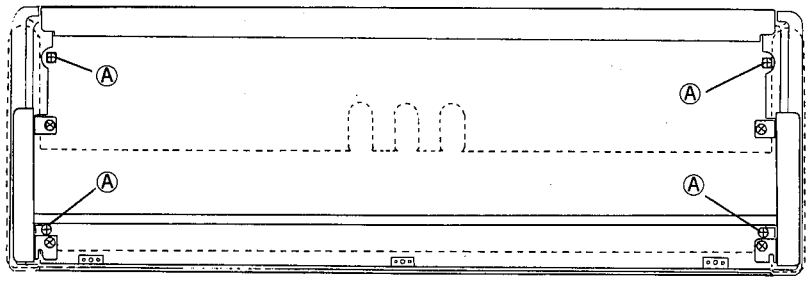

(Fig. 1)

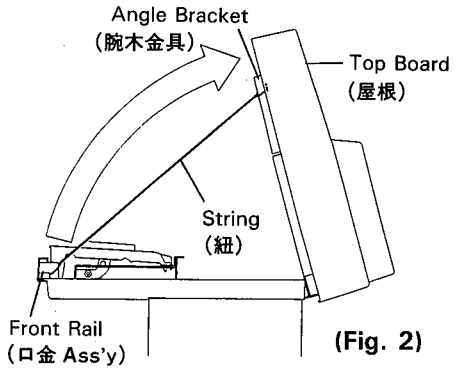

(Fig. 2)

2 DM Circuit Board Removal

2-1 Open the top board. (see procedure 1 - Opening the Top Board)

2-2 Remove the WRL circuit board. (see procedure 13)

2-3 Remove the ten (10) screws marked Ⓑ (3.0X10 bind head screw), then the DM circuit board can be removed. (Fig. 3)

2 DMシートの外し方

2-1 屋根を開けます。(1項参照)

2-2 WRLシートを外します。(13項参照)

2-3 Ⓑのネジ10本(3.0×10バインド小ネジ)を外し、DMシートを外します。(図3参照)

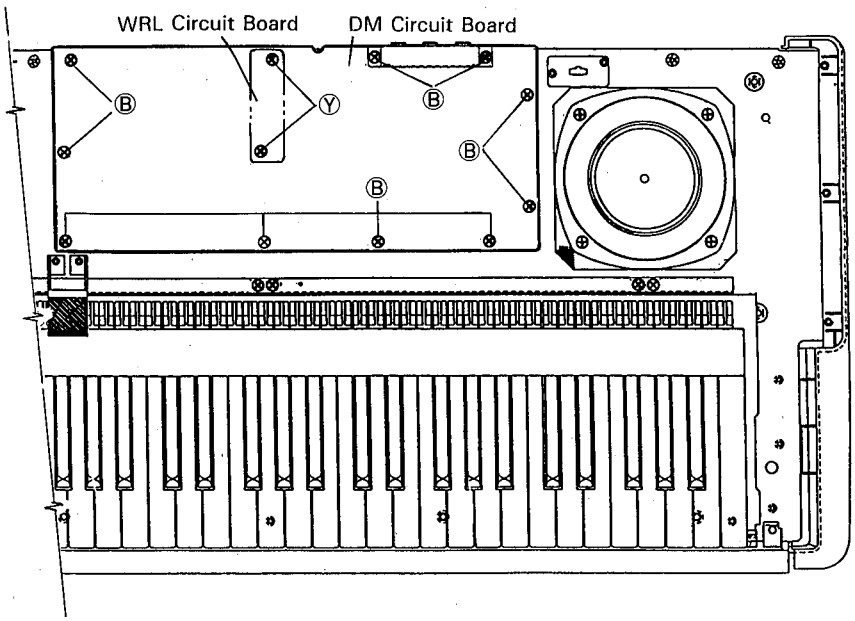

(Fig. 3)

3 PN Circuit Board Removal

3-1 Pull out the MASTER VOLUME control knob located on the control panel.
3-2 Open the top board. (see procedure 1)
3-3 Remove the five (5) screws marked Ⓒ (3.0X6 bind head screw), then the PN circuit board can be removed. (Fig. 4)

4 HP Circuit Board Removal

4-1 Open the top board. (see procedure 1)
4-2 After the two (2) screws marked Ⓓ (3.0X8 bind head screw) have been removed, then the HP circuit board can be removed. (Fig. 4)

5 Power Switch Removal

5-1 Open the top board. (see procedure 1)
5-2 Remove the two (2) screws marked Ⓔ (3.0X8 bind head tapping screw), then the power switch can be removed. (Fig. 4)

3 PNシートの外し方

3-1 コントロールパネル側より、マスターボリュームツマミを抜いておきます。
3-2 屋根を開けます。(1項参照)
3-3 Ⓒのネジ5本 (3.0×6 バインド小ネジ) を外し、PNシートを外します。(図4参照)

4 HPシートの外し方

4-1 屋根を開けます。(1項参照)
4-2 Ⓓのネジ2本(3.0×8 バインドタッピングネジ)を外し、HPシートを外します。(図4参照)

5 パワースイッチの外し方

5-1 屋根を開けます。(1項参照)
5-2 Ⓔのネジ2本(3.0×8 バインドタッピングネジ)を外し、パワースイッチを外します。(図4参照)

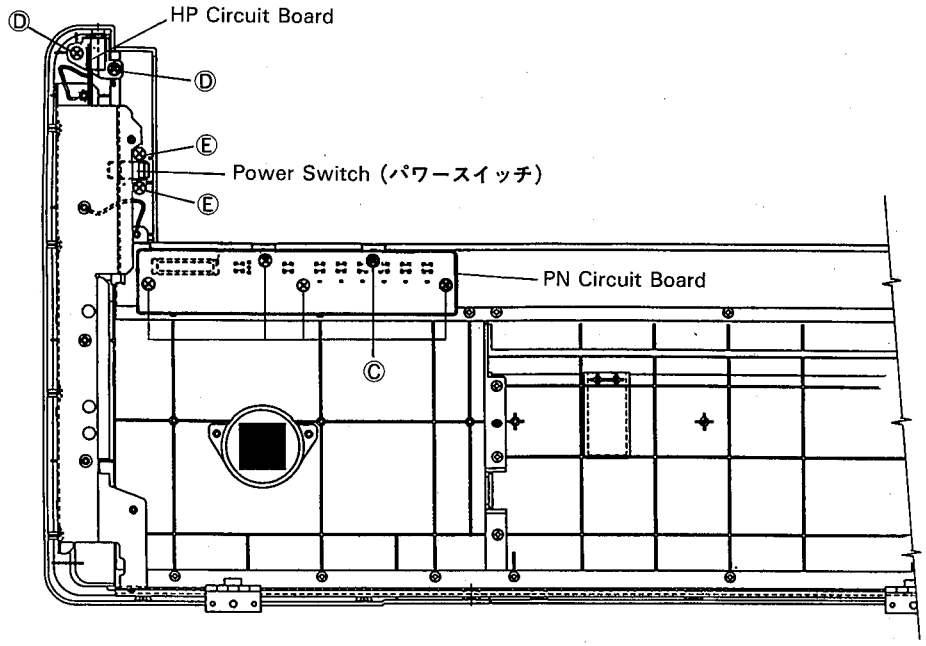

(Fig. 4)

6 PU40D Circuit Board Removal

6-1 Open the top board. (see procedure 1)

6-2 To remove the shield cover-PU, remove the two (2) screws marked Ⓕ (3.5X12 bind head tapping screw) and two (2) screws marked Ⓖ (5.0X8 bind head tapping screw). (Fig. 5)

6-3 Remove the three (3) screws marked Ⓗ (3.0X10 bind head screw) and two (2) screws marked Ⓘ (4.0X14 bind head screw), then the PU40D circuit board can be removed with the heat sink. (Fig. 4)

6-4 Remove the four (4) screws marked Ⓦ (3.0X30 pan head screw). (Fig.5-1)

6-5 After the two (2) screws marked Ⓧ (3.0X6 bind head screw) have been removed, then the PU40D circuit board can be removed from the heat sink. (Fig. 5)

7 FU Circuit Board Removal

7-1 Open the top board. (see procedure 1)

7-2 For the U.S. model only: Remove the four (4) screws marked Ⓙ (3.5X12 bind head tapping screw) and then remove the shield cover. (Fig. 5)

7-3 Remove the four (4) screws marked Ⓚ (3.0X10 bind head screw), then the FU circuit board can be removed. (Fig. 5)

8 Power Transformer Removal

8-1 Open the top board. (see procedure 1)

8-2 For the U.S. model only: Remove the four (4) screws marked Ⓙ (3.5X12 bind head tapping screw) and then remove the shield cover. (Fig. 5)

8-2 Remove the four (4) screws marked Ⓛ (4.0X14 bind head screw), then the power transformer can be removed. (Fig. 5)

6 PU40Dシートの外し方

6-1 屋根を開けます。(1項参照)

6-2 Ⓕ のネジ2本 (3.5×12 バインドタッピングネジ) と Ⓖ のネジ2本 (5.0×8 バインドタッピングネジ) を外し、シールドカバーPUを外します。(図5参照)

6-3 Ⓗ のネジ3本 (3.0×10 バインド小ネジ) とⒾのネジ2本 (4.0×14 バインド小ネジ) を外し、放熱板と共にPU40Dシートを外します。(図5参照)

6-4 Ⓦ のネジ4本 (3.0×30 ナベ小ネジ) を外します。(図5-1参照)

6-5 Ⓧ のネジ2本 (3.0×6 バインド小ネジ) を外し、放熱板からPU40Dシートを外します。(図5参照)

7 FUシートの外し方

7-1 屋根を開けます。(1項参照)

7-2 Ⓚ のネジ4本 (3.0×10 バインド小ネジ) を外し、FUシートを外します。(図5参照)

8 電源トランスの外し方

8-1 屋根を開けます。(1項参照)

8-2 Ⓛ のネジ4本 (4.0×14 バインド小ネジ) を外し、電源トランスを外します。(図5参照)

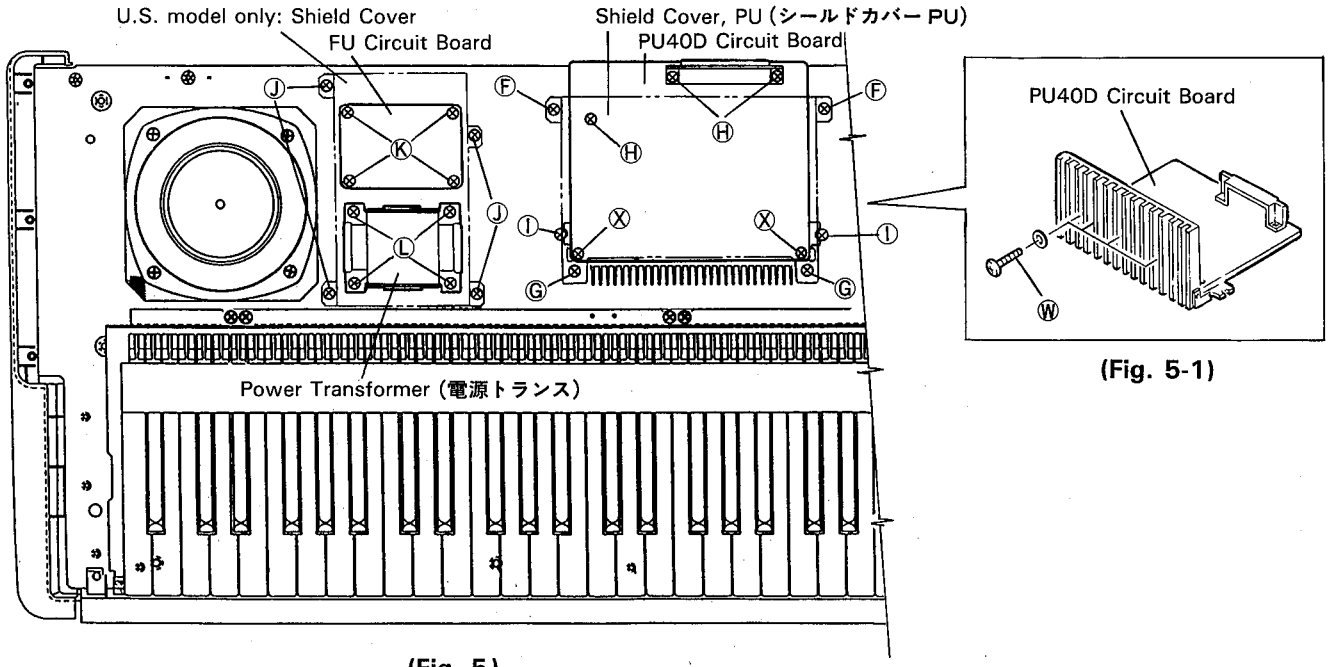

(Fig. 5-1)

(Fig. 5)

9 Keyboard Assembly Removal

9-1 Open the top board. (see procedure 1)

9-2 Remove the five (5) screws marked Ⓜ (5.0X20 bind head screw) located under the keybed. (Fig. 6)

9-3 After the four (4) screws marked Ⓝ (4.0X14 bind head screw) and four (4) screws marked Ⓞ (3.5X12 bind head tapping screw) have been removed, the keyboard assembly can be raised. (Fig. 6)

9-4 Remove the circuit board marked Ⓟ and key spring marked Ⓠ. (Fig. 7)

9-5 Remove the white key marked Ⓡ and hammer assembly marked Ⓢ. (Fig. 8)

9-6 The black key can be removed in same manner as these steps.

9 鍵盤Ass'yの外し方とその分解

9-1 屋根を開けます。(1項参照)

9-2 棚板裏側の Ⓜ のネジ5本 (5.0×20 バインド小ネジ) を外します。(図6参照)

9-3 Ⓝ のネジ4本 (4.0×14 バインド小ネジ) と Ⓞ のネジ4本 (3.5×12 バインドタッピングネジ) を外し、鍵盤Ass'yを外します。(図6参照)

9-4 基板Ⓟ を外し、鍵バネ Ⓠ を外します。(図7参照)

9-5 白鍵Ⓡ を外し、ハンマーAss'y Ⓢ を外します。(図8参照)

9-6 黒鍵も同様に外すことが出来ます。

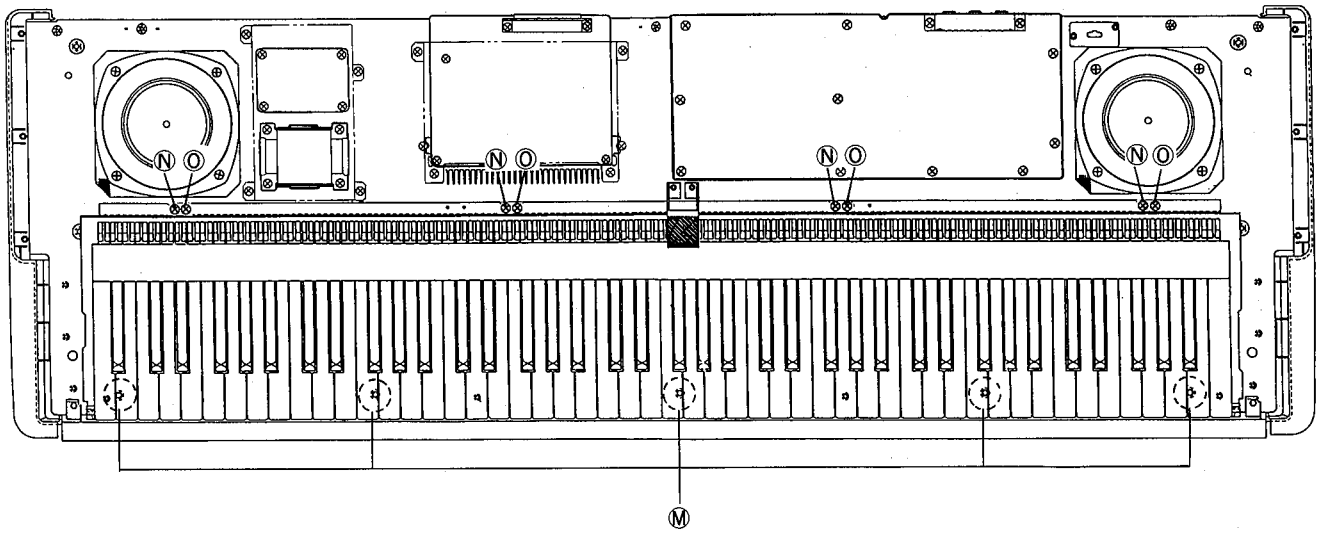

(Fig. 6)

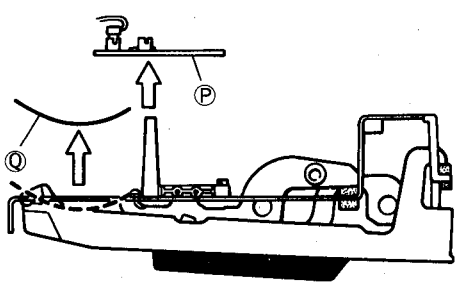

(Fig. 7)

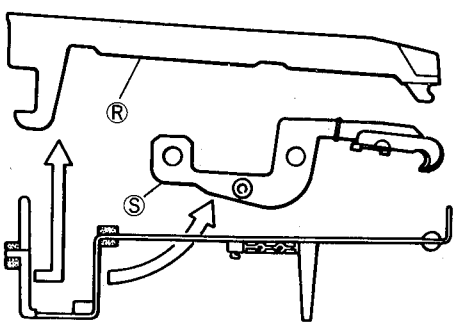

(Fig. 8)

10 Pedal Assembly Removal

10-1 To make it easier to remove the pedal assembly, place a soft blanket or similar material on the floor, gently place the rear of the unit on it.

10-2 The Pedal assembly can be removed by removing the five (5) screws marked Ⓣ(4.0X14 bind head tapping screw). (Fig. 9)

10 ペダルAss'yの外し方

10-1 CLP-360本体の背面が下になるように、本体を静かに倒します。

注) 作業には、床に布などを敷いて、本体を傷つけないように注意して下さい。

10-2 Ⓣのネジ5本 (4.0×14 バインドタッピングネジ) を外し、ペダルAss'yを外します。(図9参照)

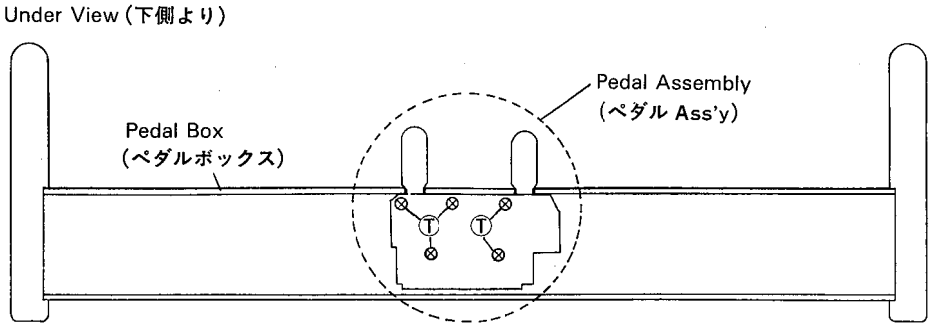

(Fig. 9)

11 CLP-360 Main Unit Removal

11-1 Disconnect the PK cable. (Fig. 10)

11-2 Remove the four (4) screws marked Ⓤ (6.0X14 bind head screw), two (2) on the left side and two (2) on the right side. After these screws have been removed, lift the unit upward slightly and then slide it toward the back, then raise it. (Fig. 10)

11 CLP-360本体の外し方

11-1 棚板裏側のコネクターから、PKケーブルを外します。(図10参照)

11-2 スタンドAss'yと本体を止めているⓊのネジ4本(6.0×14 バインド小ネジ) を外し、少し本体を持ち上げながら後方にずらした後、持ち上げて外します。(図10参照)

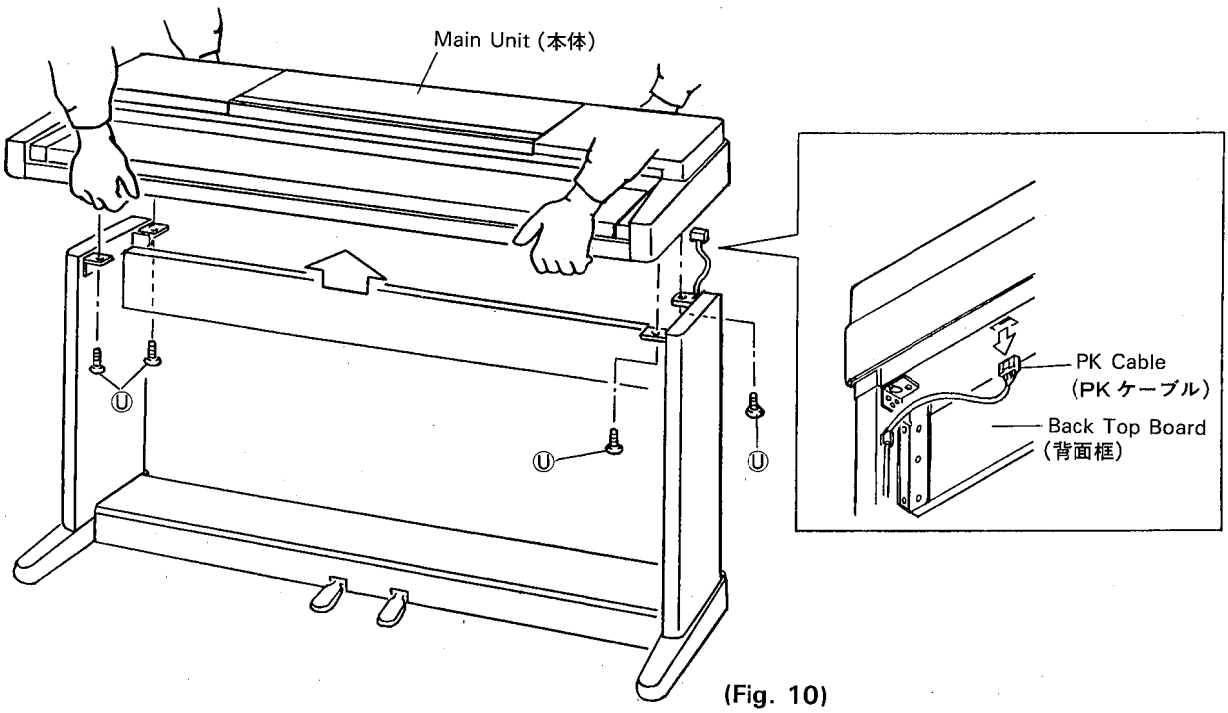

(Fig. 10)

12 L and R Speakers Removal

12-1 Open the top board. (see procedure 1)

12-2 Remove the eight (8) screws marked Ⓥ(4.0X18 bind head screw), four (4) on the L speaker and four (4) on the R speaker, then the L and R speakers can be removed. (Fig. 11)

12 スピーカーL、Rの外し方

12-1 屋根を開けます。(1項参照)

12-2 Ⓥ のネジ各4本 (4.0×18 バインド小ネジ) を外し、スピーカーL、Rをそれぞれ外します。(図11参照)

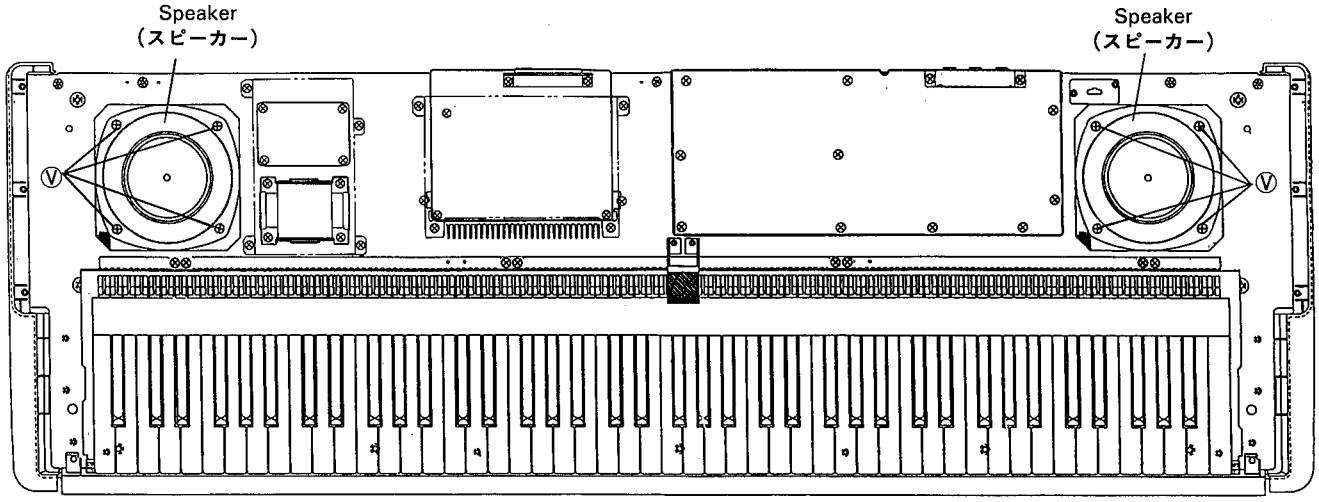

(Fig. 11)

13 WRL Circuit Board Removal

13-1 Open the top board. (see procedure 1)

13-2 Remove the two (2) screws marked Ⓨ(3.0X20 bind head screw), then the WRL circuit board can be removed. (Fig. 3)

13 WRLシートの外し方

13-1 屋根を開けます。(1項参照)

13-2 Ⓨのネジ2本(3.0×20バインド小ネジ)を外し、WRLシートを外します。(図3参照)

■LSI PIN DESCRIPTION (LSI端子機能表)

- **S83C198-R0013** (XI036A00) CPU (Central Processing Unit)

Pin No.	Name	I/O	Function	Pin No.	Name	I/O	Function
1	AD1	I/O	Address/Data bus	41	HS12	I	Inputs to high speed input unit
2	AD0	I/O		42	VSS		
3	$\overline{RD}$	O	Read signal	43	HS13	I	
4	ALE	O	Address latch enable	44	HSO0	O	Outputs from high speed output unit
5	INST	O	Output high during an external memory read indicates the read is an instruction fetch.	45	HSO1	O	
6	VSS			46	NC		
7	NC			47	NC		
8	XTAL2	O	Output of the oscillator inverter	48	NC		
9	XTAL1	I	Input of the oscillator inverter	49	NC		
10	VSS		Digital circuit ground	50	HSO2		
11	VSS			51	VSS		Digital circuit ground
12	VCC		Main supply voltage	52	VCC		Main supply voltage
13	VCC			53	HSO3	O	Output from high speed output unit
14	$\overline{EA}$	I	Input for memory select	54	VSS		Digital circuit ground
15	VSS		Digital circuit ground	55	VSS		
16	NC			56	VPP	I	Timing pin for the return from power down circuit
17	NC			57	NC		
18	NC			58	P2.5	I/O	Port 2
19	NC			59	$\overline{WR}$	O	Write output
20	ACH6	I	Port 0 (Analog input)	60	NC		
21	ACH7	I		61	P2.4	I/O	Port 2
22	NC			62	READY	I	Ready input
23	ACH5	I		63	VSS		
24	ACH4	I		64	P2.3	I/O	Port 2
25	AGND	I	Reference ground for A/D converter	65	A15	I/O	Address bus
26	VREF	I	Reference voltage for A/D converter	66	A14	I/O	
27	VSS			67	A13	I/O	
28	EXTINT/P2.2		External interrupt	68	A12	I/O	
29	VCC			69	A11	I/O	
30	$\overline{RESET}$	I	Reset	70	A10	I/O	
31	RXD	I	Serial port reception	71	A9	I/O	
32	TXD	O	Serial port transmission	72	A8	I/O	Address/Data bus
33	VSS		Digital circuit ground	73	AD6	I/O	
34	NC			74	AD6	I/O	
35	NC			75	VCC		
36	NC			76	AD5	I/O	
37	NC			77	AD4	I/O	
38	NC			78	AD3	I/O	
39	HSI0	I	Inputs to high speed input unit	79	VSS		
40	HSI1	I		80	AD2	I/O	

• YSF206 (XI069A00) AVF1 (Advanced Vector Filter)

Pin No.	Name	I/O	Function	Pin No.	Name	I/O	Function
1	D6	I/O		51	VD5	I	
2	NC			52	NC		
3	NC			53	NC		
4	NC			54	NC		
5	NC	I/O	Data bus	55	VD6	I	
6	D5	I/O		56	VD7	I	Vpp data input
7	D4	I/O		57	VD8	I	
8	D3	I/O		58	VD9	I	
9	D2	I/O		59	VD10	I	
10	D1			60	NC		
11	NC			61	VD11	I	
12	DO	I/O		62	VD12	I	
13	GND		Ground	63	VD13	I	
14	GND			64	NC		
15	NC			65	NC		
16	NC			66	GND		Ground
17	$\overline{CS}$	I	Chip select	67	GND		
18	$\overline{WR}$	I	Write control	68	NC		
19	$\overline{RD}$	I	Read control	69	VD14	I	Vpp data input
20	S/M	I	Slave/Master	70	VD15	I	
21	A4	I		71	TEST IN	I	Test pin
22	A3	I		72	TEST OUT	O	
23	A2	I	Address bus	73	SO0		Serial data output
24	A1	I		74	SO1	O	
25	A0	I		75	HCLKO	O	Half clock output
26	NC			76	NC		
27	NC			77	NC		
28	NC			78	NC		
29	VNP	I	Vpp new parameter	79	$\overline{SYOD}$	O	Synchronizer output with delay
30	VFMO	I	Vpp filter mode	80	SSYO	O	Slow synchronizer
31	VFM1	I		81	$\overline{FS}$	O	Frequency, sampling
32	VGM0	I	Vpp gain mode	82	$\overline{SYWI}$	I	Sychronizer input
33	VGM1	I		83	MCLKI	I	Master clock
34	VE/O	I	Vpp even/odd input	84	RNSI1	I	N-sys mix rear serial input
35	VCHO	I	Vpp channel input	85	NC		
36	NC			86	RNSIO	I	
37	VCH1	I		87	FNSI1	I	N-sys mix front serial input
38	VDD		Power supply	88	NC		
39	NC			89	NC		
40	VDD			90	VDD		
41	NC			91	VDD		
42	VCH2	I	Vpp channel input	92	NSI1	I	N-sys serial data input
43	NC			93	FNSI0	I	N-sys mix front serial input
44	VCH3	I		94	NC		
45	VD0	I	Vpp data input	95	NSI0	I	N-sys serial data input
46	VD1	I		96	$\overline{IC}$	I	Initial clear
47	NC			97	KOI	I	Key on input
48	VD2	I		98	NC		
49	VD3	I		99	KOO	O	Key on output
50	VD4	I		100	D7	I/O	Data bus

(* Vpp : Vector parameter processor)

• YM7132 (XH235A00) OPWZ (AWM Tone Generator)

PIN NO.	NAME	I/O	FUNCTION	PIN NO.	NAME	I/O	FUNCTION
1	MELCK	O	Clock (3.2 MHz)	51	MA19	O	Wave memory address bus
2	CXOUT	O	Clock (6.4 MHz)	52	MA20	O	
3	XTAL		Crystal osc. connection	53	MA21	O	
4	EXTAL			54	MA22	O	
5	$\overline{CS}$	I	Chip select	55	MA23	O	
6	$\overline{RD}$	I	Read control	56	BOE	I	Address bus open enable
7	$\overline{WR}$	I	Write control	57	MD0	I/O	Wave memory data bus
8	$\overline{SYMWR}$	I/O	Register synch write control	58	MD1	I/O	
9	SYI/O	I	$\overline{SYW}$ in/out control	59	MD2	I/O	
10	A0	I	CPU address bus	60	MD3	I/O	
11	A1	I		61	MD4	I/O	
12	A2	I		62	MD5	I/O	
13	A3	I		63	MD6	I/O	
14	A4	I		64	MD7	I/O	
15	Vss		Ground	65	MD8	I/O	
16	D0	I/O	CPU data bus	66	Vss		Ground
17	D1	I/O		67	MD9	I/O	Wave memory data bus
18	D2	I/O		68	MD10	I/O	
19	D3	I/O		69	MD11	I/O	
20	D4	I/O		70	MD12	I/O	
21	D5	I/O		71	MD13	I/O	
22	D6	I/O		72	MD14	I/O	
23	D7	I/O		73	MD15	I/O	
24	TEO1	O	Test pin	74	NSI0	I	N-sys input 0
25	TEO2	O		75	NSO0	O	N-sys output 0
26	TEA2	I/O	Test pin	76	NSI1	I	N-sys input 1
27	NC			77	NSO1	O	N-sys output 1
28	NC			78	KONIN	I	Key on, $\overline{LFO}$ on input
29	NC			79	KONOUT	O	Key on, $\overline{LFO}$ on output
30	TESE	I/O	Test pin	80	SI0	I	Serial data input
31	MA0	O	Wave memory address bus	81	$\overline{SI1}$	I	
32	MA1	O		82	$\overline{CRS}$	O	CD counter reset
33	MA2	O		83	CDO	O	Control data
34	MA3	O		84	SO0	O	Serial data output
35	MA4	O		85	SO1	O	
36	MA5	O		86	SO2	O	
37	MA6	O		87	SO3	O	
38	MA7	O		88	TEAL	I/O	Test pin
39	MA8	O		89	TERE	I/O	
40	VDD		Power supply	90	VDD		Power supply
41	MA9	O	Wave memory address bus	91	TENR	I/O	Test pin
42	MA10	O		92	TEAE	I/O	
43	MA11	O		93	TEAR	I/O	
44	MA12	O		94	TEOE	I/O	
45	MA13	O		95	TEI2	I	Test pin
46	MA14	O		96	TEI1	I	
47	MA15	O		97	$\overline{IC}$	I	Initial clear
48	MA16	O		98	$\overline{IRQ}$	O	Interrupt request
49	MA17	O		99	M/$\overline{S}$	I	SYNWR in/out control
50	MA18	O		100	$\overline{SYW}$	I/O	Synch signal

• YM6633 (XH543A00) KSN (Key Scanner)

PIN NO.	NAME	I/O	FUNCTION	PIN NO.	NAME	I/O	FUNCTION
1	XIN	I	Clock	33	DB0	I/O	Data bus
2	XOUT	O		34	DB1	I/O	
3	MK15	I	Keyboard 2nd make contact	35	DB2	I/O	
4	MK14	I		36	DB3	I/O	
5	MK13	I		37	DB4	I/O	
6	MK12	I		38	DB5	I/O	
7	MK11	I		39	DB6	I/O	
8	MK10	I		40	DB7	I/O	
9	MK05	I	Keyboard 1st make contact	41	AD0	I	Address bus
10	MK04	I		42	AD1	I	
11	MK03	I		43	AD2	I	
12	MK02	I		44	$\overline{CS}$	I	Chip select
13	MK01	I		45	$\overline{WR}$	I	Write control
14	MK00	I		46	$\overline{RD}$	I	Read control
15	BK0	O	Keyboard block	47	PA0	O	Port A
16	BK1	O		48	PA1	O	
17	BK2	O		49	PA2	O	
18	BK3	O		50	PA3	O	
19	BK4	O		51	PA4	O	
20	BK5	O		52	PA5	O	
21	BK6	O		53	PA6	O	
22	BK7	O		54	PA7	O	
23	Vss		Ground	55	TP	I	Test pin
24	BK8	O	Keyboard block	56	PB0	O	Port B
25	BK9	O		57	PB1	O	
26	BK10	O		58	PB2	O	
27	BK11	O		59	PB3	O	
28	BK12	O		60	PB4	O	
29	BK13	O		61	PB5	O	
30	BK14	O		62	XCLK	O	Clock for CDO
31	$\overline{IC}$	I	Initial clear	63	CDO	O	Control data
32	Vss		Ground	64	VDD		Power supply

• YM3028A (XE789A00) DAL2 (Digtal Analog Converter Logic)

PIN NO.	NAME	I/O	FUNCTION	PIN NO.	NAME	I/O	FUNCTION
1	VDD		Power supply	13	to Buff	O	Analog output to buffer amp.
2	SYW	I	Synch pulse	14	MP	I	Middle point 1/2 VDD bias
3	DGND		Digital ground	15	RC	O	Bias compensation
4	$\overline{CLK}$	I	Clock	16	RB	O	Bias – R
5	$\overline{CRASH}$	O	Crash detect	17	AGND		Analog ground
6	ZEROA	O	Zero detect	18	AVDD		Analog power supply
7	OUT 4	O	Analog signal output	19	LMTEM	I	Limiter enable
8	OUT 3	O		20	IN 1	I	Digital data input
9	OUT 2	O		21	IN 2	I	
10	OUT 1	O		22	SEL 1	I	Data shift
11	NS	I	Chip test	23	$\overline{SEL\ 2}$	I	
12	COM	I	Analog input from buffer amp.	24	$\overline{ICL}$	I	Initial clear

• YM3413 (XE449A00) LDSP (LDigital Signal Processor)

PIN NO.	NAME	I/O	FUNCTION	PIN NO.	NAME	I/O	FUNCTION
1	VDD		DC supply	21	A5	O	Address bus
2	D7	I/O	Data bus	22	A6	O	
3	D6	I/O		23	A7	O	
4	D5	I/O		24	A8	O	
5	D4	I/O		25	A9	O	
6	D3	I/O		26	A10	O	
7	D2	I/O		27	A11	O	
8	D1	I/O		28	A12	O	
9	D0	I/O		29	A13	O	
10	SI0	I	Serial data input	30	A14	O	
11	SI1	I		31	A15	O	
12	SYW	I	Synch pulse	32	A16	O	
13	$\overline{WE}$	O	Write enable	33	SO0	O	Serial data output
14	$\overline{OE}$	O	Output enable	34	XCLK		Clock
15	A0	O	Address bus	35	$\overline{IC}$	I	Initial Clear
16	A1	O		36	$\overline{CRS}$	I	CD counter reset
17	A2	O		37	CDI	I	CD input
18	A3	O		38	CDo	O	CD output
19	A4	O		39	SO1	O	Serial data output
20	Vss		Ground	40	CLK		Clock

• MIX-3 (IG156010) Mixer 3

PIN NO.	NAME	I/O	FUNCTION	PIN NO.	NAME	I/O	FUNCTION
1	MIX1	I	Input from tone generator	9	$\overline{RES}$	I	Reset
2	MIX2	I		10	NC		Not used
3	MIX3	I		11	MXD	O	Mixing data output
4	MIX4	I		12	MXC	O	
5	$\overline{CDI}$	I	Control data input	13	SYW	I	Synchro. pulse
6	$\overline{CRS}$	I	CD counter reset	14	XCLK	I	Clock
7	CDO	O	Control data output	15	CLK	I	Master clock
8	VSS		Ground	16	VDD		Power supply

■IC BLOCK DIAGRAM (IC ブロック図)

• **TC40H000P** (IF080700)
Quad 2 Input NAND

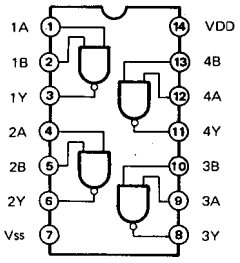

• **TC40H004P** (IG051000)
Hex Inverter

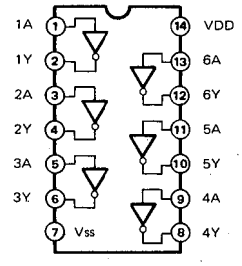

• **SN74HC132N** (IR0132500)
Quad 2 Input NAND

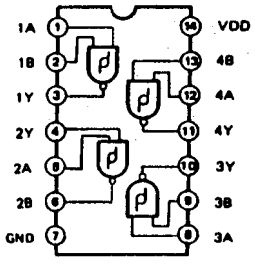

● TC40H138P (IG111900)
3 to 8 Demultiplexer

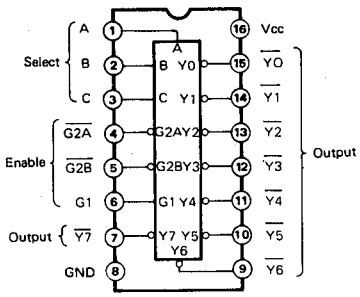

● TC40H139P (IG078300)
Dual 2 to 4 Demultiplexer

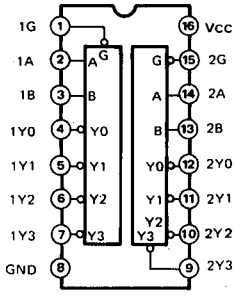

● TC40H174P (IG064100)
Hex D-Type Flip-Flop

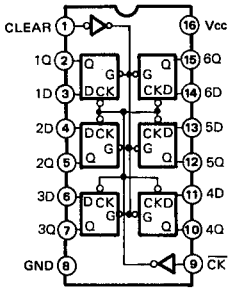

● TC40H373PYH (IG078500)
Octal 3-State D-Type Latch

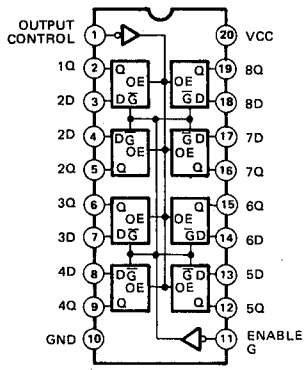

● μPC4570HA (XB247001)
Dual Operational Amplifier

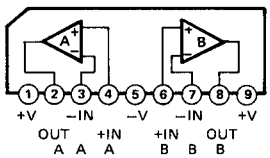

● NJM4560ED (IG040000)
Dual Operational Amplifier

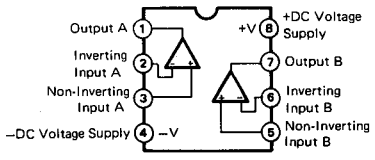

● TC40H175P (IG096700)
Quad D-Type Flip-Flop

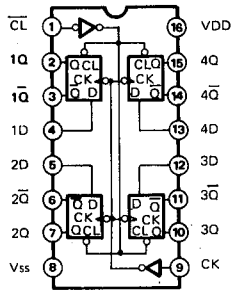

■TEST PROGRAM

1. HOW TO ENTER THE TEST PROGRAM

Turn on the power switch of the CLP-360, then press [A-1] and [C7] keys of the keyboard immediately, the system will run the INITIAL TEST routine.

2. INITIAL TEST

The following tests will be performed automatically when the test program is initiated.

A. The 2nd make contact of keyboard switch test
B. Pedal switch off test
C. Panel switch off test
D. Voice ROM installation test

DISPLAY OF TEST RESULTS

If each test checks OK then the test program proceeds to the test program entry mode.

If test A is NG, the system won't enter the test program mode.
If test B is NG, the PIANO 1 LED will blink.
If test C is NG, the PIANO 2 LED will blink.
If test D is NG, the CLAVINOVA TONE LED will blink.

3. TEST PROGRAM

3-1 SYSTEM RESET

If you press [B-1] key, you will exit the test mode and return to normal operation.

3-2 VERSION DISPLAY MODE

In order to verify the ROM version of the CLP-360, press [C0] key then the VOICE LEDs will indicate the version of ROM as shown below.

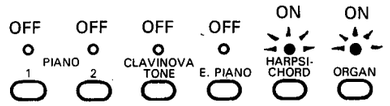

(e.g. when indicators show the version 3.)

3-3 PANEL LED TEST

To initiate this test press and hold [D0] key, and check that each LED light in succession from the left end of the unit.
If [E0] key is pressed, the entire lit LED will turn off.

3-4 EXTERNAL RAM TEST

Pressing [F0] key performs the RAM test. If an error is detected, the E. PIANO LED will blink.

3-5 MIDI TEST

After connecting the MIDI IN to MIDI OUT via MIDI cable, press [G0] key to execute this test.
If the proper code is not received, the HARPSICHORD LED will blink to indicate an error occurs.

3-6 1kHz SOUND OUTPUT (OPWZ-1)

Check that sine waves of 1kHz being output from OPWZ-1 or IC 3.
To initiate this test, press [A0] key.
(L channel: −0.38dB, R channel: −0.38dB)

3-7 440kHz SOUND OUTPUT (OPWZ-1)

Check that sine waves of 440Hz being output from OPWZ-1 or IC 3.
To initiate this test, press [B0] key.
(L channel: −0.2dB, R channel: −2.8dB)

3-8 SOUND DIMINISH

If [D1] key is pressed, the sound will diminish.

3-9 440kHz SOUND OUTPUT (OPWZ-1)

Check that sine waves of 440Hz being output from OPWZ-1 or IC 3.
To initiate this test, press [C3] key.
(L channel: −0dB, R channel: −∞dB)

3-10440kHz SOUND OUTPUT (OPWZ-1)

Check that sine waves of 440Hz being output from OPWZ-1 or IC 3.
To initiate this test, press [G3] key.
(L channel: −∞dB, R channel: −0dB)

3-1116 SOUND GENERATION TEST (OPWZ-1)

Check that 16 notes correctly sound from OPWZ-1 or IC3.
To initiate this test press [C4] key.

■テストプログラム

1．テストプログラムの起動

POWER ON直後に、〔A-1〕KEY、〔C 7〕KEYをONする事によりイニシャルテストモードとなる。

2．イニシャルテスト

イニシャルテストモードになると、以下の項目を自動的にチェックする。

(1)鍵盤2ndメイクSWチェック　　：NG→テストプログラムモードに入らない。
(2)ペダルSW OFFチェック　　：NG→PIANO 1 LED点滅
(3)パネルSW OFFチェック　　：NG→PIANO 2 LED点滅
(4)音源パラメーターROM装着チェック：NG→CLAVINOVA TONE LED点滅

3．テストプログラム

KEY ON毎に、そのKEYに該当するテストを行なう。

〔B-1〕：SYSTEM RESET
〔C 0〕：VOICE LEDでROMバージョン表示

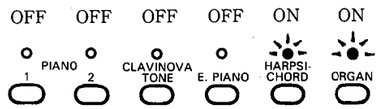

VERSION 3

〔D 0〕：PANELの全LEDを点灯する。(KEY を押しつづけると順次点灯する)
〔E 0〕：PANELの全LEDを消灯する。
〔F 0〕：外付けRAM CHECK：NG→E. PIANO LED点滅
〔G 0〕：MIDI CHECK　　：NG→HARPSICHORD LED点滅
(MIDI端子IN、OUTをMIDIケーブルでショートし、KEYをONした時、OUTよりデータが出力されINに同じデータが戻ってくればOK。)
〔A 0〕：音源OPWZ_1 1KHz、正弦波を発音。(L：−0.38dB R：−0.38dB)
〔B 0〕：音源OPWZ_1 440Hzの正弦波を発音。(L：−0.2dB R：−2.8dB)
〔D 1〕：音源OPWZ_1の発音をOFF。
〔C 3〕：音源OPWZ_1 440Hzの正弦波を発音。(L：−0 dB R：−∞dB)
〔G 3〕：音源OPWZ_1 440Hzの正弦波を発音。(L：−∞dB R：−0 dB)
〔C 4〕：音源OPWZ_1 1-16ch順次発音。

■MIDI DATA FORMAT

1. NOTE ON/OFF
Data format: [9xH] -> [kk] -> [vv]

9xH = Note ON/OFF event (x = channel number)
kk = Note number (21 ~ 108 = A-1 ~ C7)
vv = Velocity (Key ON = 1 ~ 127. Key OFF = 0)

** Note OFF event format [8xH] -> [kk] also recognized.*

2. CONTROL CHANGE & MODE MESSAGES
Data format: [BxH] -> [cc] -> [dd]

BxH = Control event (x = channel number)
cc = Control number (or mode message number)
dd = Control value

cc	PARAMETER	dd
07H	Volume	00000000 = -∞; 01101111 = -3 dB; 01111111 = ±0 dB
0BH	Expression	00000000 = -∞; 01101111 = -3 dB; 01111111 = ±0 dB
40H	Damper pedal	0 ~ 3FH = OFF; 40H ~ 7FH = ON
42H	Sostenuto pedal	0 ~ 3FH = OFF; 40H ~ 7FH = ON
43H	Soft pedal	0 ~ 3FH = OFF; 40H ~ 7FH = ON
79H	Reset all controllers	0
7AH	Local ON/OFF	0 = OFF; 7FH = ON
7BH	All notes OFF	0
7CH	OMNI OFF/All notes OFF	0
7DH	OMNI ON/All notes OFF	0

** 79H, 7AH, 7BH, 7CH and 7DH are receive only.*

3. PROGRAM CHANGE
Data format: [CxH] -> [dd]

CxH = program event (x = channel number)
dd = Program number

dd	
00H	PIANO 1
01H	PIANO 2
02H	CLAVINOVA TONE
03H	E.PIANO
04H	HARPSICHORD
05H	ORGAN

** No voice change is made when dd > 05H .*

4. SYSTEM REALTIME MESSAGES
Active Sensing (FEH)

Transmitted every 200 milliseconds. If not received for more than 400 milliseconds a NOTE OFF occurs.

5. SYSTEM EXCLUSIVE MESSAGES
Data format : [F0H] -> [43H] -> [nx] -> [ff] . . . [F7H]

n = 0, ff = 7CH: Panel data reception. Panel data follows 7CH.
n = 2, ff = 7CH: Panel data transmitted when this data received.
n = 2, ff = 7DH: Model ID code transmitted when this data received.

** Panel data is comprised of the selected voice number and reverb setting.*

6. MULTI TIMBRE MODE
Data format: [F0H] -> [43H] -> [73H] -> [24H or 25H] -> [nnH] -> [F7H]

43H = YAMAHA ID
73H = CLAVINOVA ID
24H = CLP-360 ID
nn = 15H: MULTI TIMBRE mode ON;
nn = 13H: MULTI TIMBRE mode OFF

** In addition to model ID codes [24H] and [25H], the standard ID code [01H] and Clavinova ID code [1BH] are also accepted.*

7. SPECIAL FUNCTIONS
Data format: [F0H] -> [43H] -> [73H] -> [24H or 25H] -> [11H] -> [0x] -> [cc] -> [dd] -> [F7H]

43H = YAMAHA ID
73H = CLAVINOVA ID
24H = CLP-360 ID
11H = Special function code.
0x = Control MIDI Channel

cc	CONTROL	dd
59H	REVERB	00H = OFF 01H = PEDAL 02H = ROOM 03H = HALL
5AH	DUAL	00H = OFF 01H = DUAL
5CH	2nd VOICE NUMBER	00H ~ 05H

** In the MULTI TIMBRE mode BRILLIANCE can be set independently for each channel, while REVERB affects all voices and is received on the basic receive channel.*

YAMAHA [Clavinova] Date : 05/22, 1990
Model CLP-360 MIDI Implementation Chart Version : 1.0

Function		Transmitted	Recognized	Remarks
Basic	Default	1	1	
Channel	Changed	1-16	1-16	
Mode	Default	3	1	
	Messages	X	OMNIon,OMNIoff	
		**********	X	
Note Number		21-108	21-108	
	True voice	**********	21-108	
Velocity	Note on	0 9nH,v=1-127	0 v=1-127	
	Note off	X 9nH,v=0	X	
After Touch	Key's	X	X	
	Ch's	X	X	
Pitch Bender		X	X	
Control Change	07	X	0	Volume
	11	X	0	Expression
	64	0	0	Damper
	66	0	0	Sostenuto
	67	0	0	Soft Pedal
	121	X	0 *1	Reset All Controllers
Program Change		0 0-5	0 0-5	
	True #	**********	0-5	
System Exclusive		0	0	
System Common	Song Pos	X	X	
	Song Sel	X	X	
	Tune	X	X	
System Real Time	Clock	X	X	
	Commands	X	X	
Aux Mes- sages	Local ON/OFF	X	0	
	All Notes OFF	X	0 (123-125) *2	
	Active Sense	0	0	
	Reset	X	X	

Notes : *1 = receive (121) if omni off or multi-timbre on
*2 = receive (123) if omni off or multi-timbre on

Mode 1 : OMNI ON, POLY Mode 2 : OMNI ON, MONO O : Yes
Mode 3 : OMNI OFF, POLY Mode 4 : OMNI OFF, MONO X : No

CLP-360

■CIRCUIT BOARDS（シート基板図）

●DM Circuit Board

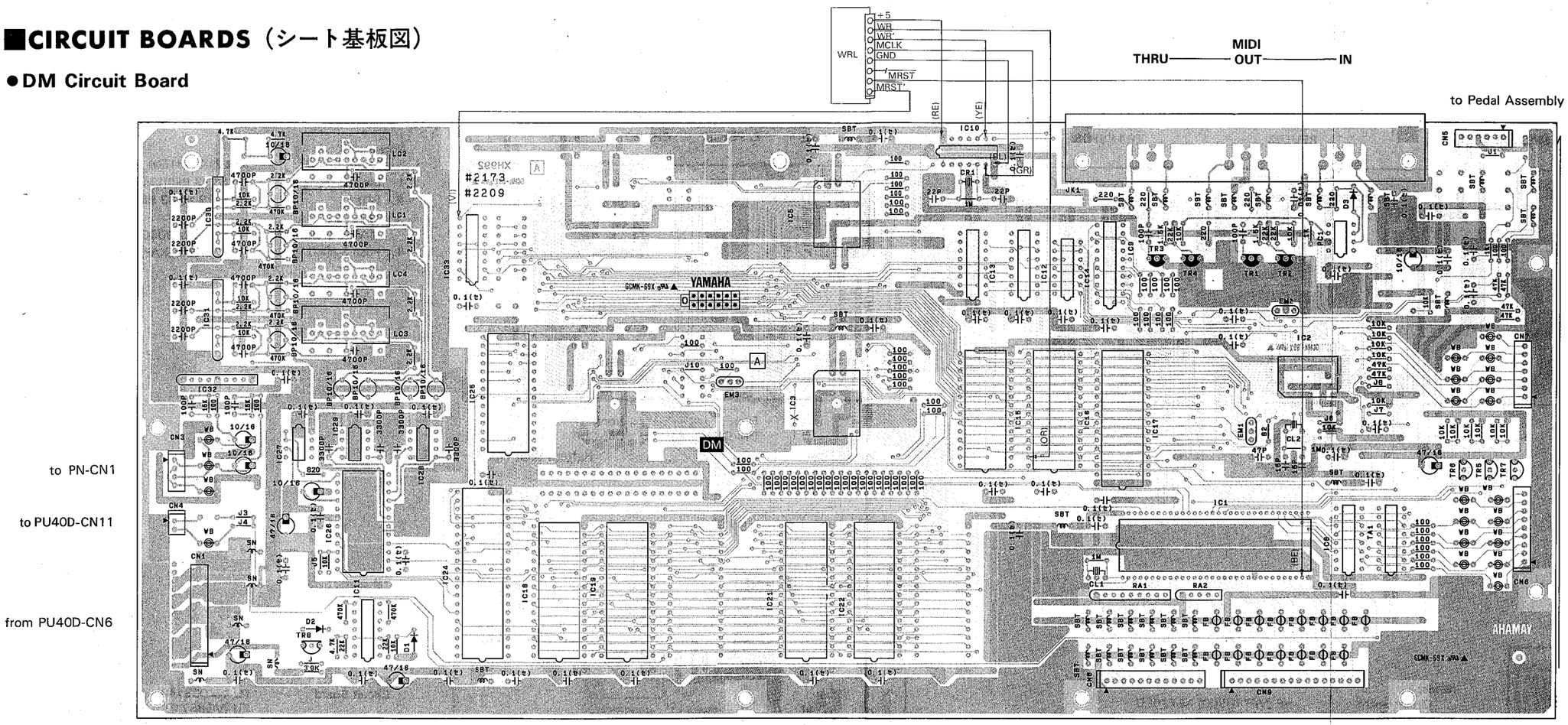

Components side（部品側）

●WRL Circuit Board

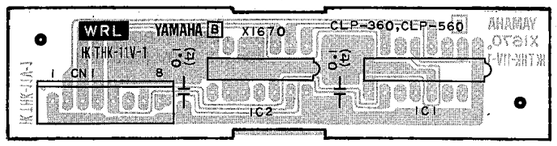

Components side（部品側）

Notes)

Circuit Board : WRL (VK326000) XI670B0

1. IC
   - IC 1: TC40H175P (IG096700) D.FF
   - IC 2: TC40H000P (IG080700) QUAD NAND
2. Semiconductive Cera. Cap.
   - marked 0.1(セ): 0.1μ 16V M (VH740700)

DM: 2NA-VJ70340 ⚠
WRL: 2NA-VK32600

Notes)

Circuit Board : DM (VJ703400) XH992A0

1. IC
   - IC 1: YM6633 (XH543A00) KSN
   - IC 2: S83C198-R0013 (XI036A00) CPU
   - IC 3: YM7132 (XH235A00) OPWZ
   - IC 5: YSF206 (XI069A00) AVF-1
   - IC 8: TC40H174P (IG064100) D.FF
   - IC 9: TC40H373PYH (IG078500) LATCH
   - IC10: TC40H004P (IG051000) INVERTER
   - IC11: SN74HC132N (IR013250) NAND
   - IC12: TC40H138P (IG111900) DEMULTIPLEXER
   - IC13: TC40H139P (IG078300) DECODER
   - IC14: TC40H000P (IG080700) QUAD NAND
   - IC15: (XI029B00) SUB ROM
   - IC16: LH5164D-10L (XF876A00) SRAM 64K
   - IC17: (XI449A00) PARAMETER 4M
   - IC18: (XI450A00) ROM-1 4M
   - IC19: (XI451A00) ROM-2 4M
   - IC21: (XI452A00) ROM-3 4M
   - IC22: (XI453A00) ROM-4 4M
   - IC24: YM3413 (XE449A00) LDSP
   - IC25: TC51832PL-10 (XC628A00) PSRAM 256K
   - IC26: YM3028 (XE789A00) DAL2
   - IC27-29: NJM4560ED (IG040000) OP AMP.
   - IC30-32: μPC4570HA (XB247001) OP AMP.
   - IC33: MIX3 (IG156010) MIXER
2. Photo Coupler
   - PC 1: 6N137 (VD473200)
3. Transistor
   - TR 1-4: 2SC1740S R,S (IC174070)
   - TR 5-8: 2SA1015 O,Y (IA101570)
4. Transistor Array
   - TA 1: MC1413P (VH441500)
5. Diode
   - D 1-3: 1SS133 (IF003450)
6. Resistor Array
   - RA 1: RGLD8X103J (VE445200) 10K×8
   - RA 2: RGLD4X103J (VE443500) 10K×4
7. Semiconductive Cera. Cap.
   - marked 0.1(セ): 0.1μ 16V M (VH740700)
8. Coil
   - SN: SF-T3-20-01 (VJ528500) 10μ
   - SBT: FL5R200QNT (VB835000) 20μ or SBT-0460T (VD473700) 60μ
9. Ferrite Bead
   - FB: BL02RN1-R62T4 (GE300610)
   - WB: BL02RN2-R62T4 (GE300670)
10. Ceramic Resonator
    - CL 1: CST4.00MGW040 (VI653000) 4MHz
    - CL 2: 12M CSA12.0MT (QU007700) 12MHz
11. Quartz Crystal Unit
    - CR 1: 12.8M AT-49 (VI460600)
12. DIN Socket
    - JK 1: JXT0820-01 (VF647300) MIDI IN,OUT,THR
13. Jumper Wire
    - J 1,4,6,7,10: installed
    - J 2,3,5,8,9: not installed

IC15	J6
○	○
X	X

● PN Circuit Board

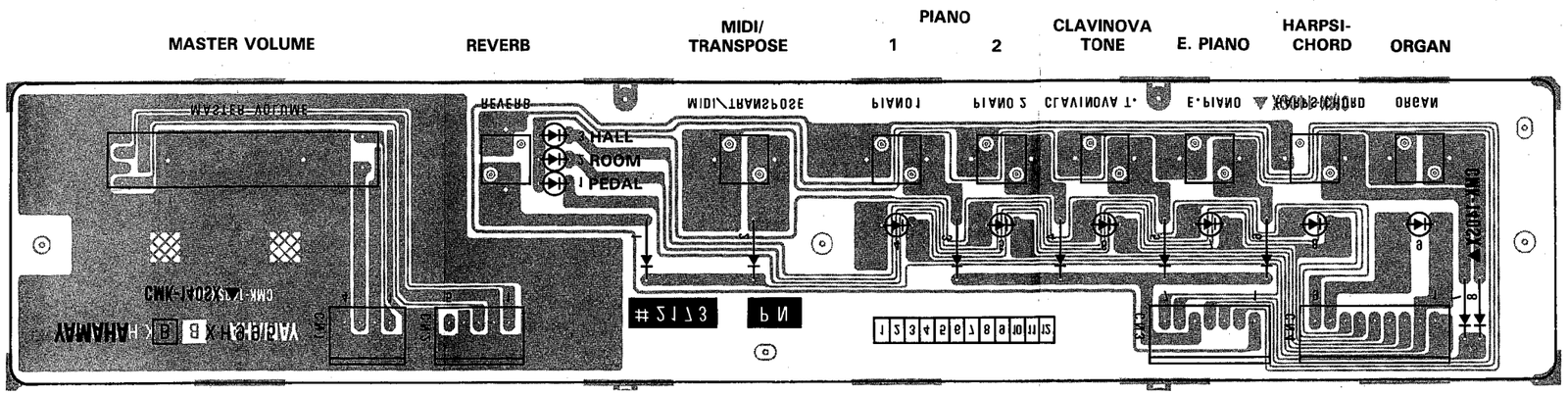

from DM-CN3 to PU40D-CN7

from DM-CN7 from DM-CN6

Pattern side（パターン側）

Notes)

	Circuit Board :	PN (NX005160) XH995B0
1.	Diode :	1SS133 (IF003450)
2.	LED :	SLZ-190B-03 RE (VD180000)
3.	Slide Pot. MASTER VOLUME:	RS30112A900QB (VK36900) A10Kx2
4.	Push Switch :	KEC10901 (KA906550)

● HP Circuit Board

from PU40D-CN8

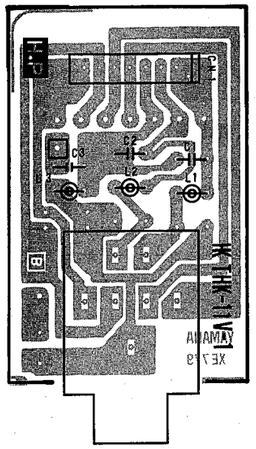

PHONES

Components side（部品側）

Notes)

	Circuit Board :	HP (VF710500) XE779B0
1.	Semiconductive Cera. Cap. C 1-3:	0.1μ 16V M (FZ006590)
2.	Coil L 1-3:	FL5R200QN 20μ (VB971100)
3.	Phone Jack	YKB21-5006 (LB101870) PHONES

● FU Circuit Board

from AC Cord

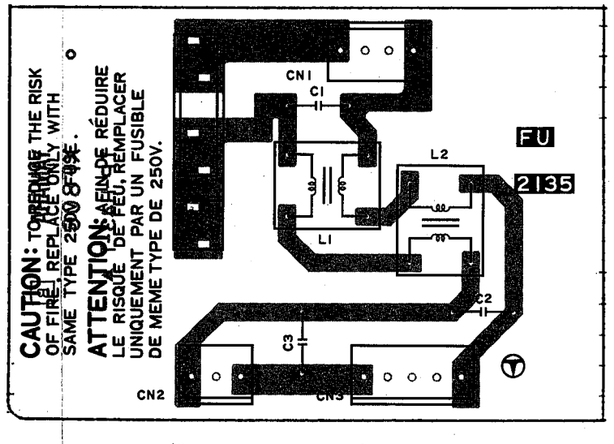

to POWER Switch to Power Transformer

Components side（部品側）

Notes)

	Circuit Board :	FU (NX005140) XF806B0 J,M,X FU (VG857100) XF806B0 U,C FU (NX005150) XF806B0 H,B,A
1.	Ceramic Cap. C 1:	0.01μ 400V (FI384100) U.C.S.V or 0.01μ 400V (FI494100) J.U.C.S
	C 2,3:	4700P 400V (FI383470) U.C.S.V or 4700P 400V (VA880100) U.C.S
2.	Coil L 1:	SU10V-D10010 (VF616300) 10μ 1A
	L 2:	SU10V-10010 (VF370900) 1mH 1A
3.	Fuse F 1:	T 1.25A J 250V (KB000430) J,M,X 1.25A U 250V (KB001450) U,C T 630mA S 250V (KB002600) H,B,A

PN: 2NA-VJ70350⚠
HP: 2NA-VF56770⚠
FU: 2NA-VG85710⚠

CLP-360

● PU40D Circuit Board

OPTIONAL

L IN R L OUT R

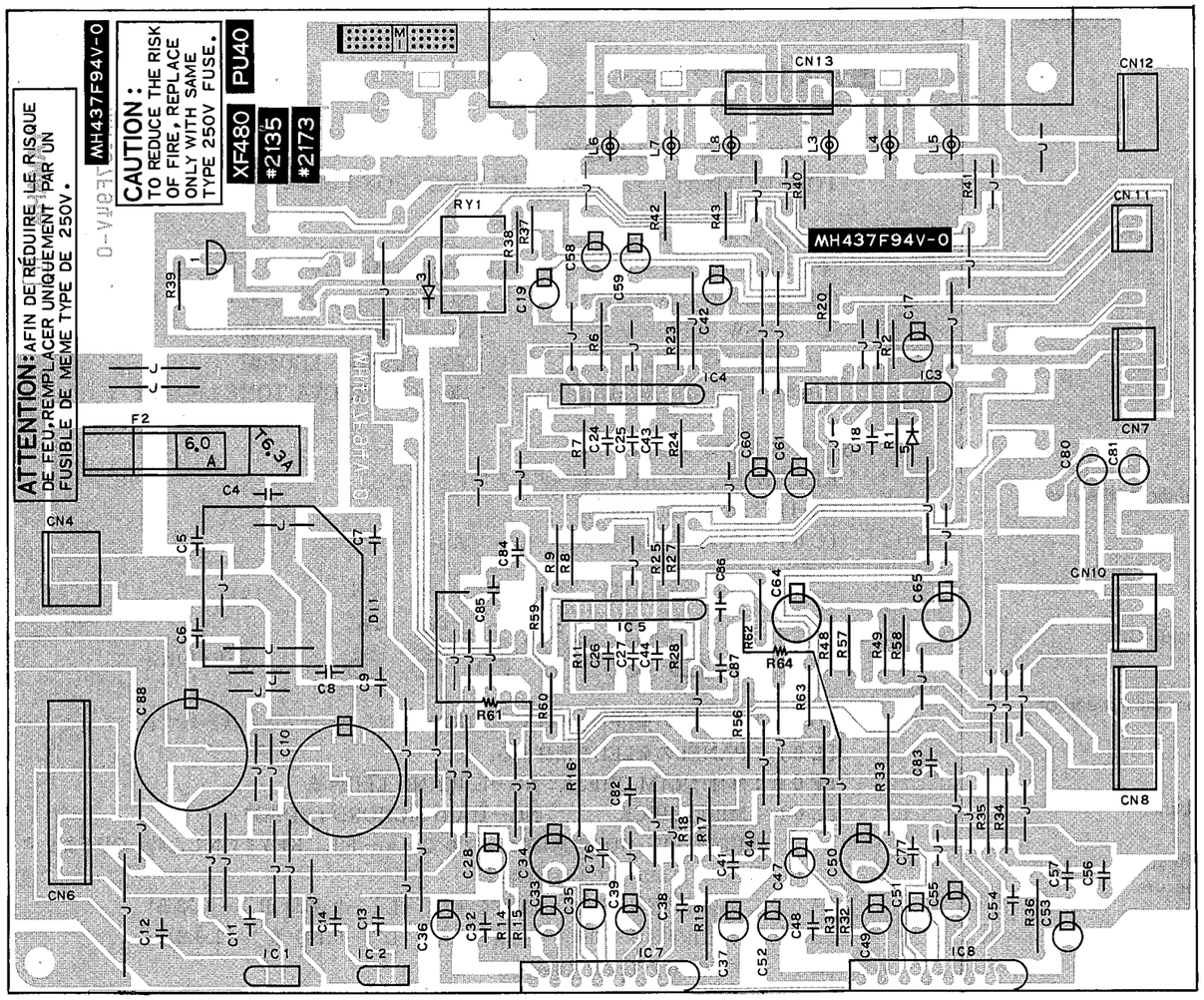

from DM-CN4

from PN-CN2

from Power Transformer

to Speakers

to HP-CN1

to DM-CN1

Components side (部品側)

Notes)

Circuit Board : PU40D (VJ573700) XF480F0 J,M,X
PU40D (VJ573800) XF480F0 U,C
PU40D (VJ573900) XF480F0 H,B,A

1. IC
   - IC 1: NJM7805FA (XC719001) +5V REGULATOR
   - IC 2: TA78DL09S (XI150A00) +9V REGULATOR
   - IC 3-5: μPC4570HA (XB247001) OP AMP.
   - IC 7,8: LA4495 (XE806A00) POWER AMP. 20W 1CH
2. Transistor
   - TR 1: 2SC1815 Y,GR (IC181580)
3. Diode
   - D 3,5: 1SS133 (IF003450)
4. Diode Stack
   - DI 1: D5FB20 5A 200V (IH001370)
5. Fuse Resistor
   - R17-19,34-36: 3.3Ω 1/2 J (VB471400)
6. Electrolytic Cap.
   - C10: 4700μ 25V (UJ749470)
7. Semiconductive Cera. Cap.
   - C 4,9,11-13,18, 25,27,76,77: 0.1μ 50V Z (VD287800)
8. Monolithic Cera. Cap.
   - C 14: 1.5μ 25V Z (VD534400)
   - C 82,83: 0.1μ 25V Z (VA762200)
9. Coil
   - L3,5-8: FL5R200QNT 20μ (VB835000) or SBT-0260TF 60μ (VF968800)
10. Pin Jack Unit
    - JPJ0730-01-510 (VG182300) OPTIONAL IN,OUT
11. Relay
    - RY 1: DC G5A-237P (VB996300)
12. Fuse
    - F 2: T 6.00A J 250V (KB001280) J,M,X
      T 6.00A U 250V (KB001250) U,C
      T 6.30A S 250V (KB001890) H,B,A

Clavinova

CLP-360

PARTS LIST

Notes DESTINATION ABBREVIATIONS

J	: Japanese model	A	: Australian model
U	: U.S. model	E	: European model
C	: Canadian model	D	: West German model
X	: General model	B	: British model
M	: South African model	I	: Indonesian model
H	: North European model		

■ELECTRICAL PARTS（電気部品）

	Ref. No.	Part No.	Description		部品名	Remarks	ランク
*		VJ703400	Circuit Board	DM	DMシート	CLP360	
*		VK326000	Circuit Board	WRL	WRLシート		
*		NX005160	Circuit Board	PN	PNシート		
		VF710500	Circuit Board	HP	HPシート		07
		VF850800	Circuit Board	PEDAL	PEDALシート		05
		VC796500	Circuit Board	AE 88L	AE88Lシート		09
		VC796300	Circuit Board	AE C	AE Cシート		10
		VC796600	Circuit Board	AE 88H	AE88Hシート		08
*		VJ573700	Circuit Board	PU40D	PU40Dシート	J,M,X	
*		VJ573800	Circuit Board	PU40D	PU40Dシート	U,C	
*		VJ573900	Circuit Board	PU40D	PU40Dシート	H,B,A	
*		NX005140	Circuit Board	FU	FUシート	J,M,X	
		VG857100	Circuit Board	FU	FUシート	U,C	12
*		NX005150	Circuit Board	FU	FUシート	H,B,A	
*		VJ703400	Circuit Board	DM	DMシート		
		IG040000	IC	NJM4560ED	IC	OP AMP.	04
		XB247001	IC	μPC4570HA	IC	OP AMP.	03
		IG051000	IC	TC40H004P	IC	INVERTER	03
		IG064100	IC	TC40H174P	IC	D.FF	05
		IG078300	IC	TC40H139P	IC	DECODER	05
		IG078500	IC	TC40H373PYH	IC	LATCH	07
		IG080700	IC	TC40H000P	IC	QUAD NAND	03
		IG111900	IC	TC40H138P	IC	DEMULTIPLEXER	04
		IG156010	IC	MIX-3	IC	MIXER	05
		IR013250	IC	SN74HC132N	IC	NAND	03
*		XI036A00	IC	S83C198-R0013	IC	CPU	
		XC628A00	IC	TC51832PL-10	IC	PSRAM 256K	09
		XF876A00	IC	LH5164D-10L	IC	SRAM 64K	08
*		XI029B00	IC		IC	SUB ROM	
*		XI449A00	IC		IC	PARAMETER 4M	
*		XI450A00	IC		IC	ROM-1 4M	
*		XI451A00	IC		IC	ROM-2 4M	
*		XI452A00	IC		IC	ROM-3 4M	
*		XI453A00	IC		IC	ROM-4 4M	
		XE449A00	IC	YM3413	IC	LDSP	10
		XE789A00	IC	YM3028	IC	DAL2	10
*		XH235A00	IC	YM7132	IC	OPWZ	
		XH543A00	IC	YM6633	IC	KSN	09
*		XI069A00	IC	YSF206	IC	AVF-1	
		VD473200	Photo Coupler	6N137	フォトカプラ		05
		IA101570	Transistor	2SA1015 O,Y	トランジスタ		01
		IC174070	Transistor	2SC1740S R,S	トランジスタ		01
		VH441500	Transistor Array	MC1413P	トランジスタアレイ		03
		IF003450	Diode	1SS133	ダイオード		01
		VE443500	Resistor Array	RGLD4X103J	抵抗アレイ	10K×4	01
		VE445200	Resistor Array	RGLD8X103J	抵抗アレイ	10K×8	01
*		VH740700	Semiconductive Cera. Cap.	0.1μ 16V M	半導体セラコン		
		VJ528500	Coil	SF-T3-20-01	コイル	10μ	03
		VB835000	Coil	FL5R200QNT	コイル	20μ	01
		VD473700	Coil	SBT-0460T	コイル	60μ	01
		QU007700	Ceramic Resonator	12M CSA12.0MT	セラミック振動子	12MHz	03
		VI653000	Ceramic Resonator	CST4.00MGW040	セラミック振動子	4MHz	01
		VI460600	Quartz Crystal Unit	12.8M AT-49	水晶振動子	12.8MHz	03
		GE300610	Ferrite Bead	BL02RN1-R62T4	フェライトビーズ		01
		GE300670	Ferrite Bead	BL02RN2-R62T4	フェライトビーズ		02
		VF647300	DIN Socket	JXT0820-01	DINソケット	MIDI IN,OUT,THR	04
*		VK326000	Circuit Board	WRL	WRLシート		
		IG096700	IC	TC40H175P	IC	D.FF	05
		IG080700	IC	TC40H000P	IC	QUAD NAND	03
*		VH740700	Semiconductive Cera. Cap.	0.1μ 16V M	半導体セラコン		
*		NX005160	Circuit Board	PN	PNシート		
		IF003450	Diode	1SS133	ダイオード		01
		VD180000	LED	SLZ-190B-03 RE	LED		01
*		VK369000	Slide Pot.	RS30112A9000B	二連スライドVR	A10K×2	
		KA906550	Push Switch	KEC10901	プッシュスイッチ		02
		VF710500	Circuit Board	HP	HPシート		07
*		FZ006590	Semiconductive Cera. Cap.	0.1μ 16V M	半導体セラコン		
		VB971100	Coil	FL5R200QN 20μ	コイル		01
		LB101870	Phone Jack	YKB21-5006	ホーンジャック	PHONES	03
		VC796500	Circuit Board	AE 88L	AE88Lシート		09
		IF003450	Diode	1SS133	ダイオード		01
		VC796300	Circuit Board	AE C	AE Cシート		10
		IF003450	Diode	1SS133	ダイオード		01

＊：New Parts（新規部品）　NR

ランク：Japan Only

Ref. No.	Part No.	Description		部品名	Remarks	ランク
	VC796600	Circuit Board	AE 88H	AE88Hシート		08
	IF003450	Diode	1SS133	ダイオード		01
*	VJ573700	Circuit Board	PU40D	PU40Dシート	J,M,X	
**	VJ573800	Circuit Board	PU40D	PU40Dシート	U,C	
**	VJ573900	Circuit Board	PU40D	PU40Dシート	H,B,A	
	XC719001	IC	NJM7805FA	IC	+5V REGULATOR	03
	XI150A00	IC	TA78DL09S	IC	+9V REGULATOR	
	XB247001	IC	μPC4570HA	IC	OP AMP.	03
	XE806A00	IC	LA4495	IC	20W 1CH	05
	IC181580	Transistor	2SC1815 Y,GR	トランジスタ		01
	IF003450	Diode	1SS133	ダイオード		01
	IH001370	Diode Stack	D5FB20 5A 200V	ダイオードスタック		05
	VB471400	Fuse Resistor	3.3Ω 1/2 J	ヒューズ抵抗		01
	UJ749470	Electrolytic Cap.	4700μ 25V	ケミコン		03
	VD287800	Semiconductive Cera. Cap.	0.1μ 50V Z	半導体セラコン		01
	VD534400	Monolithic Cera. Cap.	1.5μ 25V Z	積層セラコン		01
	VA762200	Monolithic Cera. Cap.	0.1μ 25V Z	積層セラコン		01
	VB835000	Coil	FL5R200QNT 20μ	コイル		01
	VF968800	Coil	SBT-0260TF 60μ	コイル		01
	VG182300	Pin Jack Unit	JPJ0730-01-510	ピンジャックユニット	OPTIONAL IN,OUT	03
	VB996300	Relay	DC G5A-237P	リレー		05
	KB001280	Fuse	T 6.00A J 250V	ヒューズ	J,M,X	02
	KB001250	Fuse	T 6.00A U 250V	ヒューズ	U,C	02
	KB001890	Fuse	T 6.30A S 250V	ヒューズ	H,B,A	02
	LB201530	Fuse Holder	PC-FH1	ヒューズホルダー		01
	AA058660	Transistor Holder		トランジスタホルダー		01
*	**NX005140**	Circuit Board	FU	FUシート	J,M,X	
	VG857100	Circuit Board	FU	FUシート	U,C	12
*	**NX005150**	Circuit Board	FU	FUシート	H,B,A	
	FI384100	Ceramic Cap.	0.01μ 400V	規格認定コン	U.C.S.V	01
	FI494100	Ceramic Cap.	0.01μ 400V	規格認定コン	J.U.C.S	01
	FI383470	Ceramic Cap.	4700P 400V	規格認定コン	U.C.S.V	01
	VA880100	Ceramic Cap.	4700P 400V	規格認定コン	U.C.S	01
	VF616300	Coil	SU10V-D10010	SUコイル	10μ 1A	03
	VF370900	Coil	SU10V-10010	コイル	1mH 1A	03
	KB000430	Fuse	T 1.25A J 250V	ヒューズ	J,M,X	01
	KB001450	Fuse	1.25A U 250V	ヒューズ	U,C	01
	KB002600	Fuse	T 630mA S 250V	ヒューズ	H,B,A	02
	LB201530	Fuse Holder	PC-FH1	ヒューズホルダー		01
	VD173100	Push Switch	SDDLA1	プッシュスイッチ	POWER	03
	XF800B00	Power Transformer		電源トランス	J,U,C	
**	XH798A00	Power Transformer		電源トランス	H,B	
**	XH799A00	Power Transformer		電源トランス	A,M,X	
	LB202280	Voltage Selector	HXW0131-01-910	電圧切替器	A,M,X	03
	VD846400	AC Cord	7A 3.05m	電源コード	J	05
	MG001540	AC Cord	10A 3.05m	電源コード	U,C	06
	VD846300	AC Cord	2.5A 3.05m	電源コード	H	05
	VH895700	AC Cord	6.0A 3.05m	電源コード	B	09
	MG002070	AC Cord	3.5m	電源コード	A	06
	MG002080	AC Cord	3.05m	電源コード	M	06
	VE430800	AC Cord	3.5A 3.05m	電源コード	X	05
*	VK218200	Stacked Wire, PK		PK束線	Main Unit	
	VF710800	PK Cable		PKケーブル	Pedal Box	05
*	XI072A00	Speaker	16cm 4Ω 20W	スピーカー		

＊：New Parts（新規部品）　NR　　ランク：Japan Only

■OVERALL ASSEMBLY（総組立）

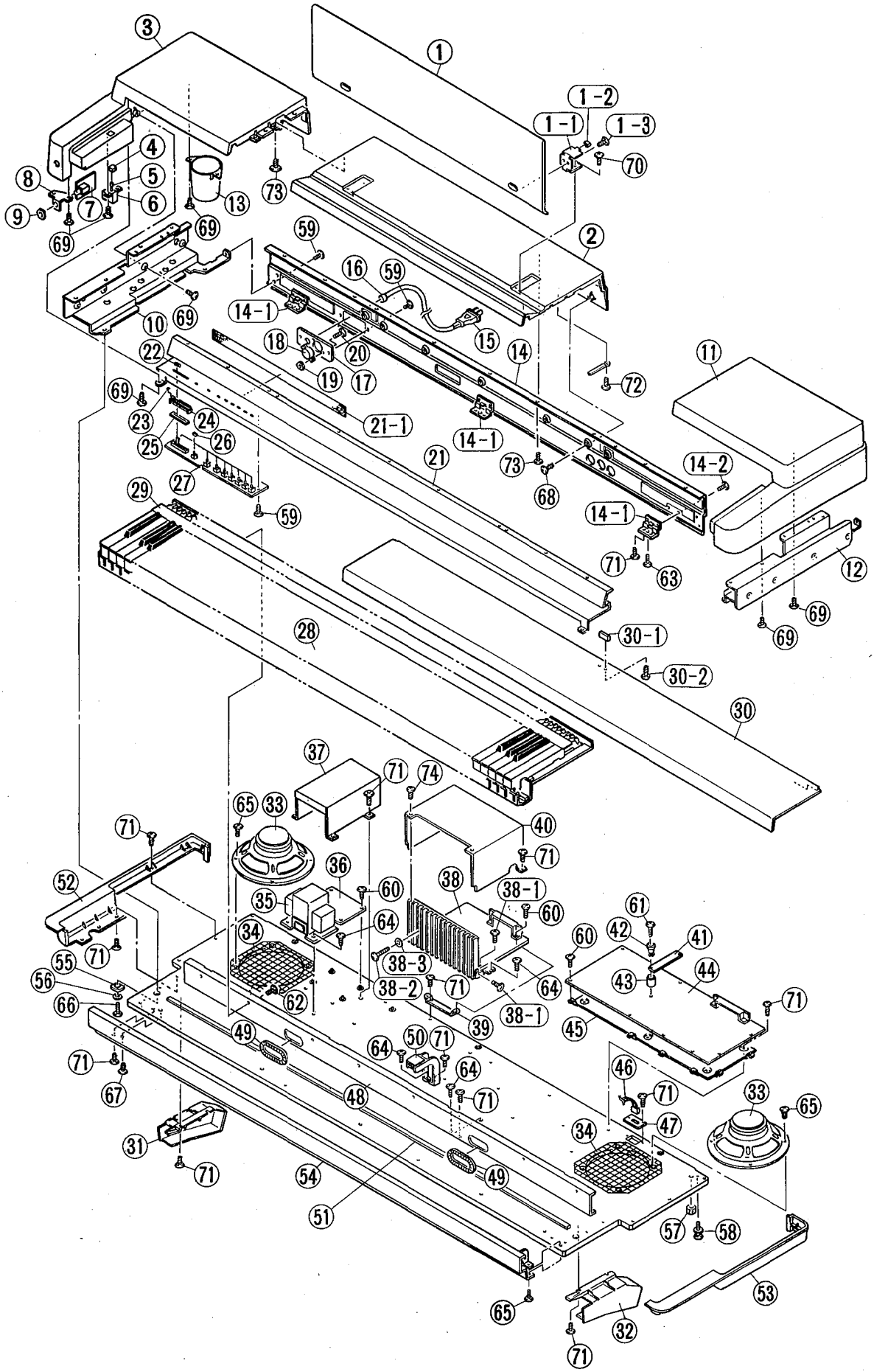

	Ref. No.	Part No.	Description		部品名	Remarks	ランク
*	1	VJ719700	Music Rest Assembly		譜面板Ass'y	CLP360	
	1-1	VD255900	Hinge		譜面板蝶番	2pcs	05
	1-2	CB054920	Cap	BL	キャップ	2pcs	01
	1-3	EI330066	Bind Head Tapping Screw	3.0X6 FCM3BL	ﾊﾞｲﾝﾄﾞﾀｯﾋﾟﾝｸﾞﾈｼﾞ	4pcs	01
*	2	VJ721500	Top Board		屋根		
*	3	VJ721000	Side Cover	Left	腕木（左）		
	4	VF663400	Knob	BL	プッシュツマミ	POWER	01
	5	VD173100	Push Switch	SDDLA1	プッシュスイッチ	POWER	03
	6	CB049980	Switch Cover	BL	パワースイッチカバー	POWER	01
	7	VF710500	Circuit Board	HP	HPシート		07
	8	VF701200	Angle Bracket, HP		HP取付金具		01
	9	ET400040	Nut	12X14X2 FCM3BL	管用ナット		01
*	10	VJ614000	Bracket, Side Cover	Left	腕木金具（左）		
*	11	VJ721100	Side Cover	Right	腕木（右）		
*	12	VJ614100	Bracket, Side Cover	Right	腕木金具（右）		
*	13	VK330200	Speaker Pillar Assembly		ｽﾋﾟｰｶｰﾋﾟﾗｰAss'y[		
*	14	VJ719900	Back Board		背面框		
	14-1	VA882700	Hinge		蝶番	3pcs	03
	14-2	ED330066	Bind Head Screw	3.0X6 FCM3BL	バインド小ネジ	6pcs	01
	15	VD846400	AC Cord	7A 3.05m	電源コード	J	05
	15	MG001540	AC Cord	10A 3.05m	電源コード	U,C	06
	15	VD846300	AC Cord	2.5A 3.05m	電源コード	H	05
	15	VH895700	AC Cord	6.0A 3.05m	電源コード	B	09
	15	MG002070	AC Cord	3.5m	電源コード	A	06
	15	MG002080	AC Cord	3.05m	電源コード	M	06
	15	VE430800	AC Cord	3.5A 3.05m	電源コード	X	05
	16	CB032840	Cord Strain Relief	SR-5N-4	コードストッパー	J,U,C,M,X	01
	16	CB072750	Cord Strain Relief	SR-4N-4	コードストッパー	H,B,A	01
	17	AA104700	Cord Holder		コード取り付け板	J,U,C,H,B	02
	17	AA105130	Cord Holder		コード取り付け板	A,M,X	04
	18	LB202280	Voltage Selector	HXW0131-01-910	電圧切替器	A,M,X	03
	19	EV108030	Hexagonal Nut	M3.0 ZMC2Y	フランジ付六角ナット	A,M,X	01
	20	ED330106	Bind Head Screw	3.0X10 FCM3BL	バインド小ネジ	A,M,X	01
*	21	VJ722600	Control Panel		コントロールパネル		
	21-1	VF852600	Dust Proof Cloth	400X25	防塵クロス		01
	22	CB059250	Knob	BL-YE	スライドツマミ	MASTER VOLUME	01
	23	VD214900	Spaser-S		防振スペーサーS		01
	24	VD135000	Escutcheon	BL	エスカッション		01
	25	CA016330	Dust Proof Cloth		防塵クロス		01
	26	CB059240	Knob	BL	プッシュツマミ	FUNCTION	01
*	27	NX005160	Circuit Board	PN	PNシート		
	28	VC530600	Keyboard Assembly	A88 K6	AE鍵盤Ass'y		70
	29	VD401700	Felt	1226X40X1 RE	フェルト（赤）		03
*	30	VG525900	Keyboard Cover Assembly	88KEY	鍵蓋Ass'y	J	
	30-1	VB151000	Khob, Keyboard Cover	BL	鍵蓋ツマミ		01
	30-2	EI330086	Bind Head Tapping Screw	3.0X8 FCM3BL	ﾊﾞｲﾝﾄﾞﾀｯﾋﾟﾝｸﾞﾈｼﾞ	2pcs	01
*	31	VG336800	Holder, Keyboard Cover	Left	KCホルダー（左）	J	
*	32	VG336900	Holder, Keyboard Cover	Right	KCホルダー（右）	J	
*	33	XI072A00	Speaker	16cm 4Ω 20W	スピーカー		
	34	VF823100	Net		金網		03
	35	XF800B00	Power Transformer		電源トランス	J,U,C	
*	35	XH798A00	Power Transformer		電源トランス	H,B	
*	35	XH799A00	Power Transformer		電源トランス	A,M,X	
*	36	NX005140	Circuit Board	FU	FUシート	J,M,X	
	36	VG857100	Circuit Board	FU	FUシート	U,C	12
*	36	NX005150	Circuit Board	FU	FUシート	H,B,A	
	37	VG186900	Shield Cover		シールドカバー	U	05
*	38	VJ573700	Circuit Board	PU40D	PU40Dシート	J,M,X	
*	38	VJ573800	Circuit Board	PU40D	PU40Dシート	U,C	
*	38	VJ573900	Circuit Board	PU40D	PU40Dシート	H,B,A	
	38-1	ED030066	Bind Head Screw	3.0X6 ZMC2Y	バインド小ネジ	4pcs	01
	38-2	EA030306	Pan Head Screw	3.0X30 ZMC2Y	ナベ小ネジ	4pcs	01
	38-3	EX000390	Flat Washer	3.0X8X0.5 ZMC2Y	平座金みがき丸	4pcs	01
*	39	VJ624000	Angle Bracket, PCB		シート固定金具		
*	40	VJ742000	Shield Cover-PU		シールドカバーPU		
*	41	VK326000	Circuit Board	WRL	WRLシート		
	42	VD411300	Bushing	TA-310	カラーブッシュ		01
	43	VD411400	Bushing	TB-300	カラーブッシュ		01
*	44	VJ703400	Circuit Board	DM	DMシート		
*	45	VJ738600	Holder, DM Circuit Board		DMシート取付金具		
*	46	VK218200	Stacked Wire, PK		PK束線		
	47	VF715700	Connector Panel		コネクターパネル		01
	48	VD526300	Angle, Keyboard Assembly	A 88	反り止め金具		07
	49	VD521600	Bushing		自在ブッシュ		01
*	50	VK227600	Panel Support Assembly		パネル受け金具Ass'y		
	51	VK020200	MK Cushion	88K	クッション材		06
*	52	VJ722800	Side Case	Left	サイドケース（左）		
*	53	VJ722700	Side Case	Right	サイドケース（右）		
*	54	VJ722300	Front Rail Assembly		口金Ass'y		

＊：New Parts（新規部品） NR

ランク：Japan Only

Ref. No.	Part No.	Description		部品名	Remarks	ランク
55	EW300220	Metal Fitting	M5 ZMC2BL	シャーシ締付け座金		01
56	EV203046	FLat Washer	φ4 FCM3BL	平座金		01
57	VD986100	Nut	B6.0X10.5 ZMC2Y	鬼目ナット		01
58	VG297600	Guide Screw	4X14	ガイドスクリュー		01
59	ED330066	Bind Head Screw	3.0X6 FCM3BL	バインド小ネジ		01
60	ED030106	Bind Head Screw	3.0X10 ZMC2Y	バインド小ネジ		01
61	ED030206	Bind Head Screw	3.0X20 ZMC2Y	バインド小ネジ		01
62	ED340066	Bind Head Screw	4.0X6 FCM3BL	バインド小ネジ		01
63	ED340126	Bind Head Screw	4.0X12 FCM3BL	バインド小ネジ		01
64	ED040146	Bind Head Screw	4.0X14 ZMC2Y	バインド小ネジ		01
65	ED340186	Bind Head Screw	4.0X18 ZMC2BL	バインド小ネジ		01
66	ED340206	Bind Head Screw	4.0X20 FCM3BL	バインド小ネジ		01
67	ED350206	Bind Head Screw	5.0X20 ZMC2BL	バインド小ネジ		01
68	EI030066	Bind Head Tapping Screw	3.0X6 ZMC2Y	ﾊﾞｲﾝﾄﾞﾀｯﾋﾟﾝｸﾞﾈｼﾞ		01
69	EI030086	Bind Head Tapping Screw	3.0X8 ZMC2Y	ﾊﾞｲﾝﾄﾞﾀｯﾋﾟﾝｸﾞﾈｼﾞ		01
70	EI330086	Bind Head Tapping Screw	3.0X8 FCM3BL	ﾊﾞｲﾝﾄﾞﾀｯﾋﾟﾝｸﾞﾈｼﾞ		01
71	EI335126	Bind Head Tapping Screw	3.5X12 FCM3BL	ﾊﾞｲﾝﾄﾞﾀｯﾋﾟﾝｸﾞﾈｼﾞ		01
72	EI040066	Bind Head Tapping Screw	4.0X6 ZMC2Y	ﾊﾞｲﾝﾄﾞﾀｯﾋﾟﾝｸﾞﾈｼﾞ		01
73	EI040146	Bind Head Tapping Screw	4.0X10 ZMC2Y	ﾊﾞｲﾝﾄﾞﾀｯﾋﾟﾝｸﾞﾈｼﾞ		01
74	EI050086	Bind Tapping Screw	5.0X8 ZMC2Y	ﾊﾞｲﾝﾄﾞﾀｯﾋﾟﾝｸﾞﾈｼﾞ		01
		Accessories		付属品		
a		Top Cover		トップカバー	U,C,H,B,A,M,X	
* b	VG525900	Keyboard Cover Assembly	88KEY	鍵蓋Ass'y	J	
b-1	VB151000	Khob, Keyboard Cover	BL	鍵蓋ツマミ		01
b-2	EI330086	Bind Head Tapping Screw	3.0X8 FCM3BL	ﾊﾞｲﾝﾄﾞﾀｯﾋﾟﾝｸﾞﾈｼﾞ	2pcs	01
* * * c	VG336800	Holder, Keyboard Cover	Left	KCホルダー（左）	J	
* * * d	VG336900	Holder, Keyboard Cover	Right	KCホルダー（右）	J	
e	VJ741100	Screw Set		ネジセット		
e-1	ED360206	Bind Head Screw	6.0X20 ZMC2BL	バインド小ネジ	4pcs	02
e-2	EA060700	Pan Head Screw	6.0X70 ZMC2Y	ナベ尖先小ネジ	4pcs	01
e-3	ET400070	Joint Connector	6.0X13 ZMC2BL	ジョイントコネクター	4pcs	01
e-4	ED360146	Bind Head Screw	6.0X14 ZMC2BL	バインド小ネジ	4pcs	02
e-5	VF850000	Truss Head Screw	6.0X14 ZMC2BL	トラス小ネジ	4pcs	01

＊：New Parts（新規部品） NR

ランク：Japan Only

■STAND ASSEMBLY（スタンドAss'y）

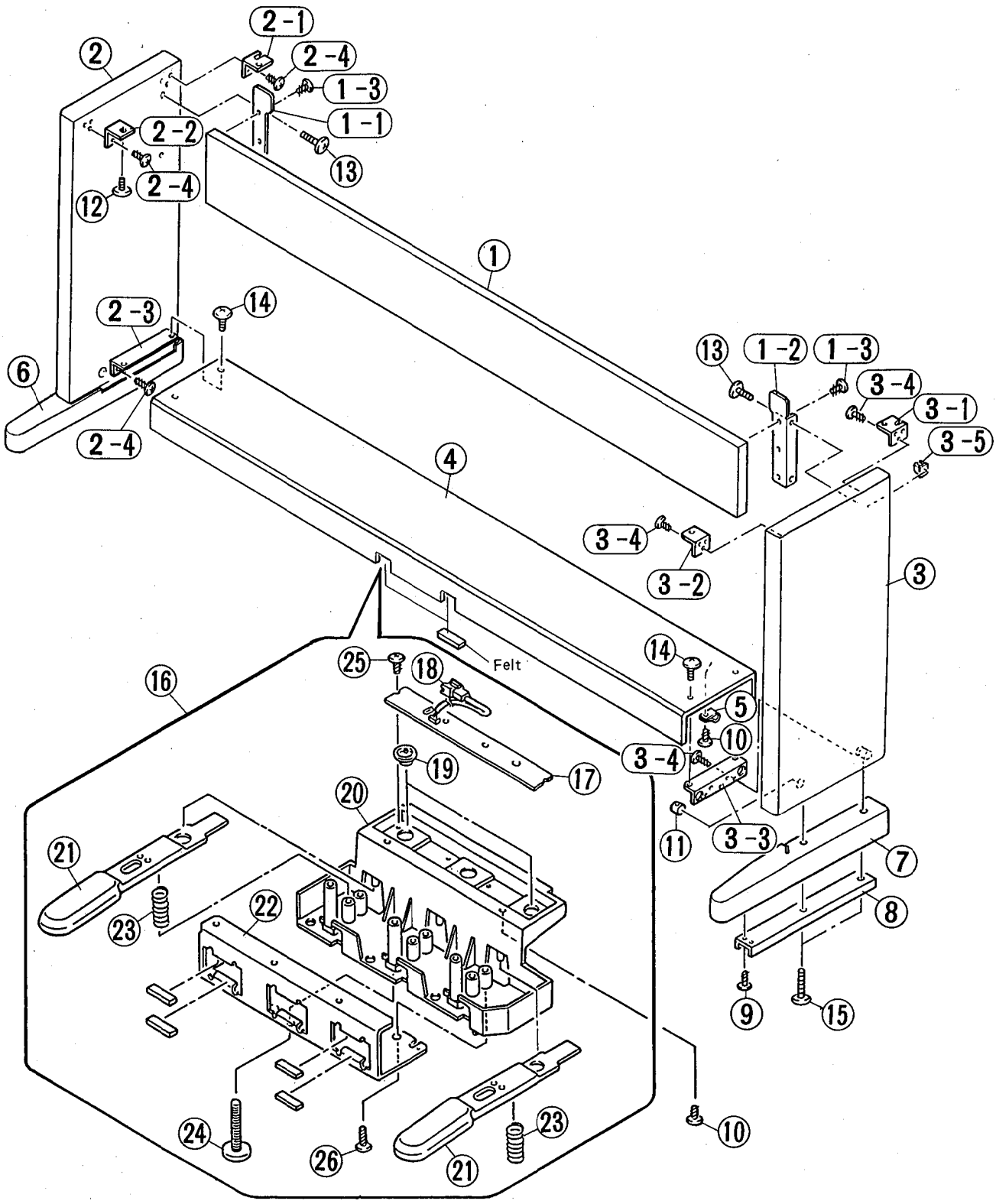

CLP-360

	Ref. No.	Part No.	Description		部品名	Remarks	ランク
			Stand Assembly		スタンドAss'y	CLP360	
*	1	VJ624200	Back Top Board		背面框Ass'y		
	1-1	VH666500	Holder, Back Top Board	Left	背面固定金具（左）		03
	1-2	VH726800	Holder, Back Top Board	Right	背面固定金具（右）		03
	1-3	EI340166	Bind Head Tapping Screw	4.0X16 FCM3BL	ﾊﾞｲﾝﾄﾞﾀｯﾋﾟﾝｸﾞﾈｼﾞ		01
*	2	VJ614600	Side Board	Left	側板集成（左）		
	2-1	VA880700	Holder	Left	受金具（左）		01
	2-2	VA880600	Angle Bracket		アングル		02
	2-3	VF805300	Angle Bracket, Pedal Box		ﾍﾟﾀﾞﾙﾎﾞｯｸｽ取付金具		02
	2-4	EI335206	Bind Head Tapping Screw	3.5X20 FCM3BL	ﾊﾞｲﾝﾄﾞﾀｯﾋﾟﾝｸﾞﾈｼﾞ		01
*	3	VJ614700	Side Cover	Right	側板集成（右）		
	3-1	VA880900	Holder	Right	受金具（右）		01
	3-2	VA880600	Angle Bracket		アングル		02
	3-3	VF805300	Angle Bracket, Pedal Box		ﾍﾟﾀﾞﾙﾎﾞｯｸｽ取付金具		02
	3-4	EI335206	Bind Head Tapping Screw	3.5X20 FCM3BL	ﾊﾞｲﾝﾄﾞﾀｯﾋﾟﾝｸﾞﾈｼﾞ		01
**	3-5	VG598700	NK Clamper	DKN-5 BL	NKクランプ		
***	4	VJ623200	Pedal Box		ペダルボックス	J	
**	4	VJ623300	Pedal Box		ペダルボックス	U,C,H,B,A,M,X	
	5	CB900030	Cord Clamper	NK-2N	コード押え		01
	6	VF631200	Stand Base	Left	妻土台（左）		07
	7	VF631300	Stand Base	Right	妻土台（右）		07
	8	VA881100	Angle Bracket, Stand Base		妻土台金具		03
	9	EI040106	Bind Head Tapping Screw	4.0X10 ZMC2Y	ﾊﾞｲﾝﾄﾞﾀｯﾋﾟﾝｸﾞﾈｼﾞ		01
	10	EI040146	Bind Head Tapping Screw	4.0X14 ZMC2Y	ﾊﾞｲﾝﾄﾞﾀｯﾋﾟﾝｸﾞﾈｼﾞ		01
	11	ET400070	Joint Connector	6.0X13 ZMC2BL	ジョイントコネクター		01
	12	ED360146	Bind Head Screw	6.0X14 ZMC2BL	バインド小ネジ		02
	13	ED360206	Bind Head Screw	6.0X20 ZMC2BL	バインド小ネジ		02
	14	VF850000	Truss Head Screw	6.0X14 ZMC2BL	トラス小ネジ		01
	15	EA060700	Pan Head Screw	6.0X70 ZMC2Y	ナベ尖先小ネジ		01
	16	VF678300	Pedal Assembly		ペダルAss'y		12
	17	VF850800	Circuit Board	PEDAL	PEDALシート		05
	18	VF710800	PK Cable		PKケーブル		05
	19	VF815100	Rubber Contact		接点ゴム		01
	20	VF645700	Pedal Frame	BL	ペダルフレーム		05
	21	VF657600	Pedal		ペダル		06
	22	VF657700	Stopper, Pedal		ペダル支持金具		04
	23	VF658100	Pedal Spring		ペダルバネ		01
	24	VF851300	Adjuster		丸形アジャスター		01
	25	EI030106	Bind Head Tapping Screw	3.0X10 ZMC2Y	ﾊﾞｲﾝﾄﾞﾀｯﾋﾟﾝｸﾞﾈｼﾞ		01
	26	EI350256	Bind Head Tapping Screw	5.0X25 ZMC2BL	ﾊﾞｲﾝﾄﾞﾀｯﾋﾟﾝｸﾞﾈｼﾞ		02

＊：New Parts（新規部品）　NR

ランク：Japan Only

■KEYBOARD ASSEMBLY（鍵盤Ass'y）

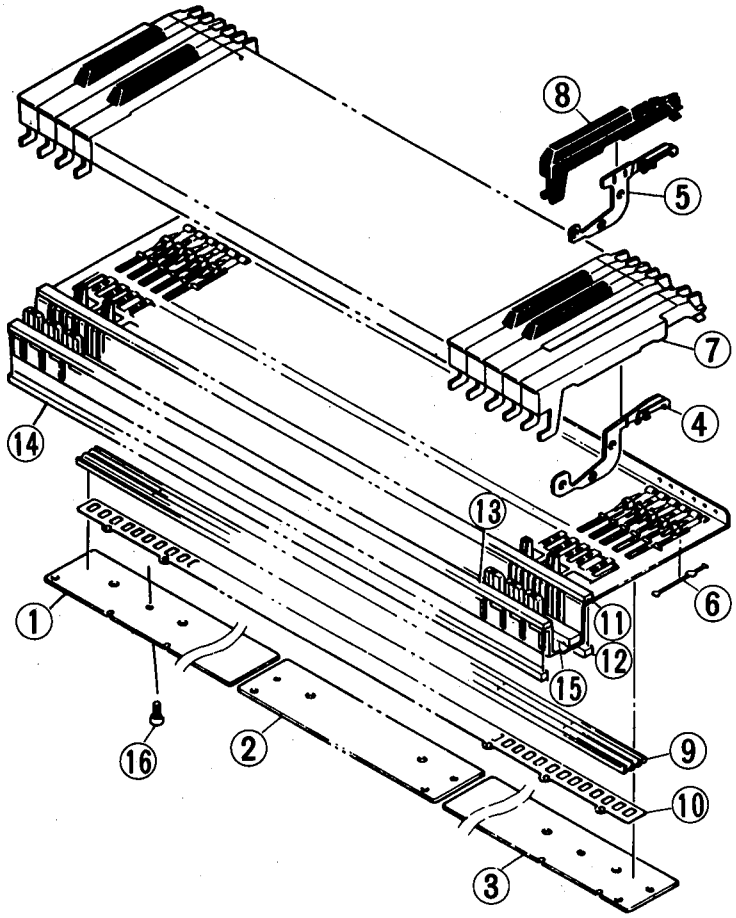

Ref	Part No.	Description		部品名	Remarks	ランク
	VC530600	Keyboard Assembly	AE 88 K6	ＡＥ鍵盤Ａss'y	CLP360	70
1	VC796500	Circuit Board	AE 88L	ＡＥ８８Ｌシート		09
2	VC796300	Circuit Board	AE C	ＡＥ　Ｃシート		10
3	VC796600	Circuit Board	AE 88H	ＡＥ８８Ｈシート		08
4	VD317300	Hammer Assembly	White Keys	ハンマー白鍵Ａss'y		04
5	VD317900	Hammer Assembly	Black Keys	ハンマー黒鍵Ａss'y		04
6	VC795100	Key Spring	AE MK	鍵バネ		01
7	VC507100	White Key	C	白鍵Ｃ		03
7	VC507200	White Key	D	白鍵Ｄ		03
7	VC507300	White Key	E	白鍵Ｅ		03
7	VC507400	White Key	F	白鍵Ｆ		03
7	VC507500	White Key	G	白鍵Ｇ		03
7	VC507600	White Key	A	白鍵Ａ		03
7	VC507700	White Key	B	白鍵Ｂ		03
7	VC507800	White Key	C'	白鍵Ｃ'		03
7	VC508100	White Key	A'	白鍵Ａ'		03
8	VC508300	Black Key		黒鍵		02
9	VC799200	Rubber Contact	AE 88	可動導電ゴム		08
10	VC799300	Insulation Spacer	AE 88	絶縁スペーサー		03
11	VC984900	Felt	A	フェルト		04
12	VI437200	Cushion		クッション		05
13	VC985100	Felt	C	フェルト		03
14	VC985200	Felt	D	フェルト		03
15	VC985300	Felt	E	フェルト		05
16	EI030106	Bind Head Tapping Screw	3.0X10 ZMC2Y	ﾊﾞｲﾝﾄﾞﾀｯﾋﾟﾝｸﾞﾈｼﾞ		01
16	EI330106	Bind Head Tapping Screw	3.0X10 ZMC2BL	ﾊﾞｲﾝﾄﾞﾀｯﾋﾟﾝｸﾞﾈｼﾞ		01

＊：New Parts（新規部品）　NR

ランク：Japan Only

■BENCH（椅子）　BC7

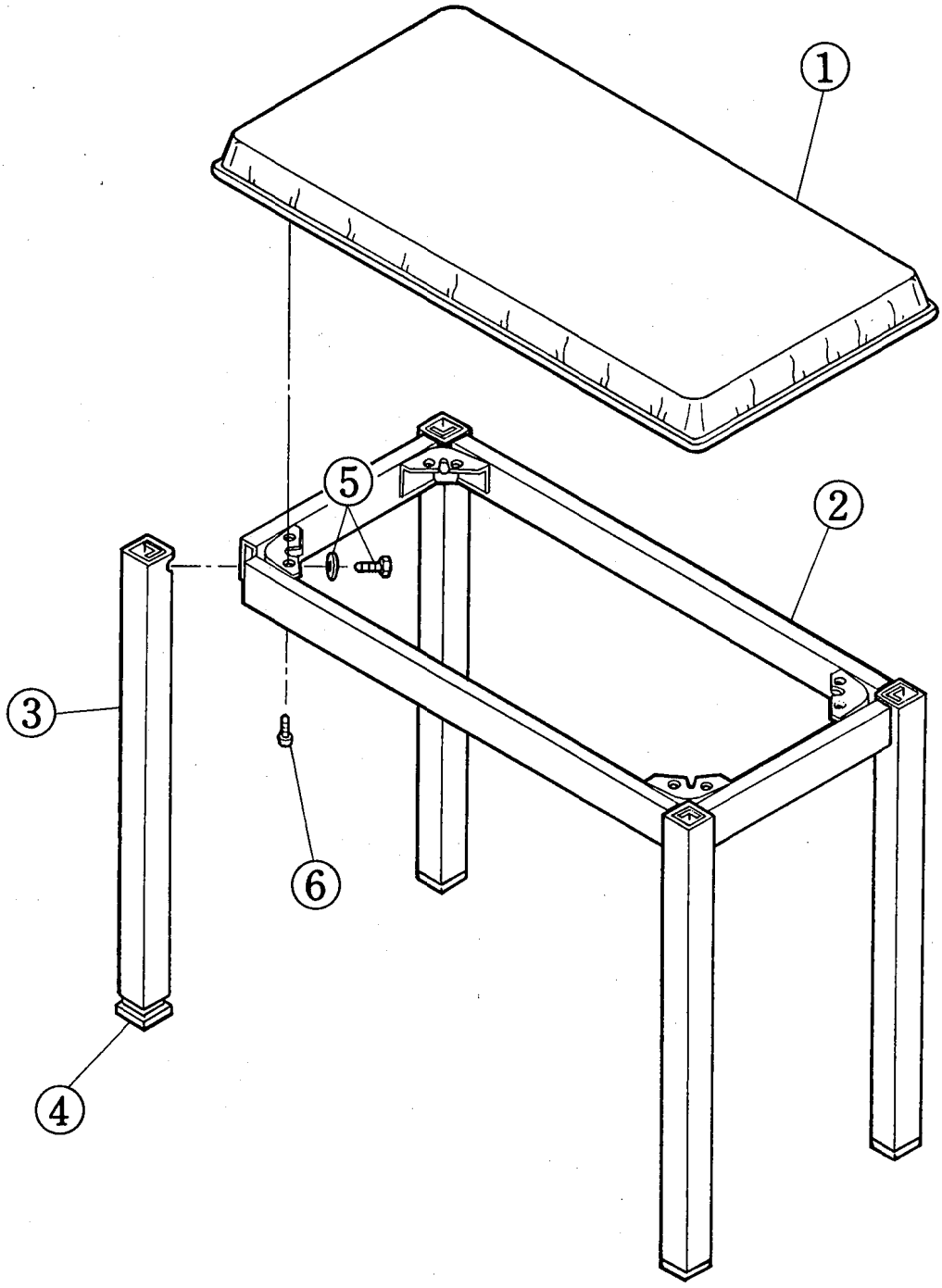

Ref. No.	Part No.	Description		部品名	Remarks	ランク
		Bench	BC-7	椅子		
1	NX003280	Bench Board Assembly		座板Ａｓｓ'ｙ	J	16
1	NX003320	Bench Board Assembly		座板Ａｓｓ'ｙ	A,B,C,H,M,X	16
1	NX003330	Bench Board Assembly		座板Ａｓｓ'ｙ	U	16
2	AX000190	Bench Frame Assembly		座枠Ａｓｓ'ｙ		18
3	AX000200	Leg Pipe Assembly		脚パイプＡｓｓ'ｙ		05
4	CX002990	Leg Cap		脚キャップ		03
5	EX000410	Hexagonal Bolt + SP Washer		バネ座金六角ボルト		01
6	EJ350206	Pan Head Tapping Screw	5.0X20 FCM3BL	ナベタッピングネジ		01

＊：New Parts（新規部品）　NR

ランク：Japan Only

■CLP-360 OVERALL CIRCUIT DIAGRAM(CLP-360総回路図)

142-9

DM

PN 1/2

WRL

PEDAL

MK

PN 2/2

PU40D

HP

FU

POWER

Notes)
Circuit Board : DM (VJ7703400) XH992A0
1. IC
IC 1: YM6633 (XH543A00) KSN
IC 2: S83C198-R0013 (X0036A00) CPU
IC 3: YM7132 (XH235A00) OPWZ
IC 5: YSF206 (X0069A00) AVF-1
IC 8: TC40H174P (IG0641O0) D.FF
IC 9: TC40H373PYH (IG0785O0) LATCH
IC10: TC40H004P (IG0510O0) INVERTER
IC11: SN74HC132N (IR013250) NAND
IC12: TC40H138P (IG111900) DEMULTIPLEXER
IC13: TC40H139P (IG0783O0) DECODER
IC14: TC40H000P (IG0807O0) QUAD NAND
IC15: (X0239800) SUB ROM
IC16: LH5164D-10L (XF876A00) SRAM 64K
IC17: (IX449A00) PARAMETER 4M
IC18: (IX450A00) ROM-1 4M
IC19: (IX451A00) ROM-2 4M
IC21: (IX452A00) ROM-3 4M
IC22: (IX453A00) ROM-4 4M
IC24: YM3413 (XE449A00) LDSP
IC25: TC51832PL-10 (XC828A00) PSRAM 256K
IC26: YM3028 (XE788A00) DAL2
IC27-29: NJM4560ED (IG040000) OP AMP.
IC30-32: μPC4570HA (XB247001) DP AMP.
IC33: MIX3 (IG156010) MIXER
2. Photo Coupler
PC 1: 6N137 (VD473200)
3. Transistor
TR 1-4: 2SC1740S R,S (IC174070)
TR 5-8: 2SA1015 O,Y (IA101570)
4. Transistor Array
TA 1: MC14139 (VH441500)
5. Diode
D 1-3: 1SS133 (IF003450)
6. Resistor Array
RA 1: RGLD8X103J (VE445200) 10K×8
RA 2: RGLD4X103J (VE443500) 10K×4
7. Semiconductive Cera. Cap. marked 0.1(↑): 0.1μ 16V M (VH740700)
8. Coil
SN: SF-T3-20-01 (VJ528500) 10μ
SBT: FL5R200GNT (VB835000) 20μ or SBT-0460T (VD473700) 60μ
9. Ferrite Bead
FB: BL02RN1-R6Z*4 (GE300610)
WB BL02RN2-R6Z*4 (GE300670)
10. Ceramic Resonator
CL 1: CST4.00MGW040 (VI653000) 4MHz
CL 2: 12M CSA12.0MT (CU007700) 12MHz
11. Quartz Crystal Unit
CR 1: 12.8M AT-49 (V1460600)
12. DIN Socket
JK 1: JXT082O-01 (VF847300) MIDI IN,OUT,THR
13. Jumper Wire
J 1, 4, 6, 7, 10: installed
J 2, 3, 5, 8, 9: not installed

IC15	J5
O	O
X	X

ADDRESS MAP
FFFF AVF ROM
C000 KSN OPVZ AVF
A000 RAM
6000 MAIN ROM

Notes)
Circuit Board : WRL (VK3260O0) XI67080
1. IC
IC 1: TC40H175P BG0967O0 D.FF
IC 2: TC40H000P (IG0807O0) QUAD NAND
2. Semiconductive Cera. Cap. marked 0.1(↑): 0.1μ 16V M (VH740700)

Notes)
Circuit Board : PN (NX0051600) XH995B0
1. Diode 1SS133 (IF003450)
2. LED : SLZ-I03 RE (VD180000)
3. Slide Pot MASTER VOLUME: RS30112A900DB (VK36900) A10K×2
4. Push Switch : KEC10901 (KA906550)

Notes)
Circuit Board : HP (VF710500) XE779B0
1. Semiconductive Cera. Cap. C 1-3: 0.1μ 16V M (IF200650)
2. Coil L 1-3: FL5R200GN 20μ (VB971100)
3. Phone Jack YKB21-5006 (LB101870) PHONES

Notes)
Circuit Board : FU (NX0051400) XF806B0 J,M,X
FU (VG857100) XF806B0 U,C
FU (NX0051500) XF806B0 H,B,A
1. Ceramic Cap. C 1: 0.01μ 400V (FI384100) U.C.S.V or 0.01μ 400V (FI454100) J.U.C.S 4700P 400V (FI383470) U.C.S.V or 4700P 400V (VA880100) U.C.S
C 2,3:
2. Coil L 1: SU10V-010010 (VF616300) 10μ 1A L 2: SU10V-100101 (VF370900) 1mH 1A
3. Fuse F 1: T 1.25A J 250V (KB000430) J,M,X 1.25A U 250V (KB001450) U,C T 630mA S 250V (KB002600) H,B,A

Notes)
Circuit Board : PU40D (VJ573700) XF480F0 J,M,X PU40D (VJ573800) XF480F0 U,C PU40D (VJ573900) XF480F0 H,B,A
1. IC
IC 1: NJM7805FA (XC719001) +5V REGULATOR
IC 2: TA78DL09S (X1150A00) +9V REGULATOR
IC 3-5: μPC457OHA (XB247001) OP AMP.
IC 7,8: LA4495 (XE806A00) POWER AMP. 20W 1CH
2. Transistor TR 1: 2SC1815 Y, GR (IC181580)
3. Diode D 3,5: 1SS133 (IF003450)
4. Diode Stack DI 1: D5FB20 5A 200V (IH001370)
5. Fuse Resistor R17-19,,34-36: 3.3Ω 1/2 J (VB471400)
6. Electrolytic Cap. C10: 4700μ 25V (UJ749470)
7. Semiconductive Cera. Cap. C 4,9,11-13,18, 25,27,76,77: 0.1μ 50V Z (VD287800)
8. Monolithic Cera. Cap. C 14: 1.5μ 25V Z (VD534400) C 82,,83: 0.1μ 25V Z (VA762200)
9. Coil L3,5-8 FL5R200QNT 20μ (VB835000) or SBT-0260TF 60μ (VF968800)
10. Pin Jack Unit JPJ0730-01-510 (VG182300) OPTIONAL IN,OUT
11. Relay RY 1: DC G5A-237P (VB996300)
12. Fuse F 2: T 6.00A J 250V (KB001280) J,M,X T 6.00A U 250V (KB001250) U,C T 6.30A S 250V (KB001890) H,B,A

For US & Canadian Models: CN3 1 BR 120V, 3 YE 100V, 5 GY 0V
For North European Model: CN3 1 BE 220V, 3 RE 240V, 5 GY 0V
For British Model: CN3 1 RE 240V, 3 BE 220V, 5 GY 0V
For General Export Model: CN3 1 YE, 2 RE 240, 3 RE 220, 4 VI 130, 4 OR 200, 5 GY 0V