Clavinova

CLP-265GP

SERVICE MANUAL



■ CONTENTS

SPECIFICATIONS 3
PANEL LAYOUT 4
DISASSEMBLY PROCEDURE 5
LSI PIN DESCRIPTION 17
IC BLOCK DIAGRAM 20
CIRCUIT BOARDS 21
INSPECTIONS 38
DATA BACKUP 43
MIDI IMPLEMENTATION CHART 47
MIDI DATA FORMAT 48
PARTS LIST
BLOCK DIAGRAM
CIRCUIT BOARD LAYOUT & WIRING
OVERALL CIRCUIT DIAGRAM

CL 001772

YAMAHA
HAMAMATSU, JAPAN

Copyright (c) Yamaha Corporation. All rights reserved. M I '06.11

IMPORTANT NOTICE

This manual has been provided for the use of authorized Yamaha Retailers and their service personnel. It has been assumed that basic service procedures inherent to the industry, and more specifically Yamaha Products, are already known and understood by the users, and have therefore not been restated.

WARNING: Failure to follow appropriate service and safety procedures when servicing this product may result in personal injury, destruction of expensive components and failure of the product to perform as specified. For these reasons, we advise all Yamaha product owners that all service required should be performed by an authorized Yamaha Retailer or the appointed service representative.

IMPORTANT: This presentation or sale of this manual to any individual or firm does not constitute authorization certification, recognition of any applicable technical capabilities, or establish a principal-agent relationship of any form.

The data provided is believed to be accurate and applicable to the unit(s) indicated on the cover. The research engineering, and service departments of Yamaha are continually striving to improve Yamaha products. Modifications are, therefore, inevitable and changes in specification are subject to change without notice or obligation to retrofit. Should any discrepancy appear to exist, please contact the distributor's Service Division.

WARNING: Static discharges can destroy expensive components. Discharge any static electricity your body may have accumulated by grounding yourself to the ground bus in the unit (heavy gauge black wires connect to this bus.)

IMPORTANT: Turn the unit OFF during disassembly and parts replacement. Recheck all work before you apply power to the unit.

WARNING: CHEMICAL CONTENT NOTICE!

The solder used in the production of this product contains LEAD. In addition, other electrical/electronic and/or plastic (Where applicable) components may also contain traces of chemicals found by the California Health and Welfare Agency (and possibly other entities) to cause cancer and/or birth defects or other reproductive harm.

DO NOT PLACE SOLDER, ELECTRICAL/ELECTRONIC OR PLASTIC COMPONENTS IN YOUR MOUTH FOR ANY REASON WHAT SO EVER!

Avoid prolonged, unprotected contact between solder and your skin! When soldering, do not inhale solder fumes or expose eyes to solder/flux vapor!

If you come in contact with solder or components located inside the enclosure of this product, wash your hands before handling food.

IMPORTANT NOTICE FOR THE UNITED KINGDOM
Connecting the Plug and Cord

IMPORTANT: The wires in this mains lead are coloured in accordance with the following code:

BLUE : NEUTRAL
BROWN : LIVE

As the colours of the wires in the mains lead of this apparatus may not correspond with the coloured makings identifying the terminals in your plug proceed as follows:
The wire which is coloured BLUE must be connected to the terminal which is marked with the letter N or coloured BLACK.
The wire which is coloured BROWN must be connected to the terminal which is marked with the letter L or coloured RED.
Making sure that neither core is connected to the earth terminal of the three pin plug.

• This applies only products distributed by Yamaha-Kemble music (U.K.) Ltd. (2 wires)

■ WARNING

Components having special characteristics are marked ⚠ and must be replaced with parts having specification equal to those originally installed.

■ SPECIFICATIONS

Keyboard	GH3 keyboard 88 keys (A-1 – C7)
Sound Source	AWM Stereo Sampling
Polyphony (Max.)	64
Voice Selection	14
Effect	Reverb, Effect, Brilliance
Volume	Master Volume
Controls	Dual, Metronome, Transpose, Touch (Hard/Medium/Soft/Fixed), Functions
Recording/Playback	2-part recording/playback (three user songs), Tempo Adjustment, Sync Start
Pedal	Damper (with half-pedal effect), Sostenute, Soft
Demo Songs	14 voice Demo Songs, 50 preset Songs
Jacks/Connectors	MIDI (IN/OUT/THRU), PHONES X 2, AUX IN(L/L+R, R), AUX OUT (LEVEL, FIXED) (L, R) USB TO HOST
Memory Device	Internal Flash Memoy (for saving User songs):65KB (for saving External songs): 307KB
Main Amplifiers	40W x 2
Speakers	16cm x 2 + 3cm x 2
Dimensions (W x D x H) (Lid up)	1,434mm x 1146mm x 931mm [56 1/2" x 45 1/8" x 36 2/3"] (1,434mm x 1146mm x 1,400mm) [56 1/2" x 45 1/8" x 55 1/8"]
Weight	97kg (213lbs., 14oz)
Accessories	Owner's Manual, "50 greats for the Piano" (Music Book), Accessory CD-ROM for Windows Accessory CD-ROM for Windows Installation Guide Bench (included or optional depending on locale)

■ PANEL LAYOUT

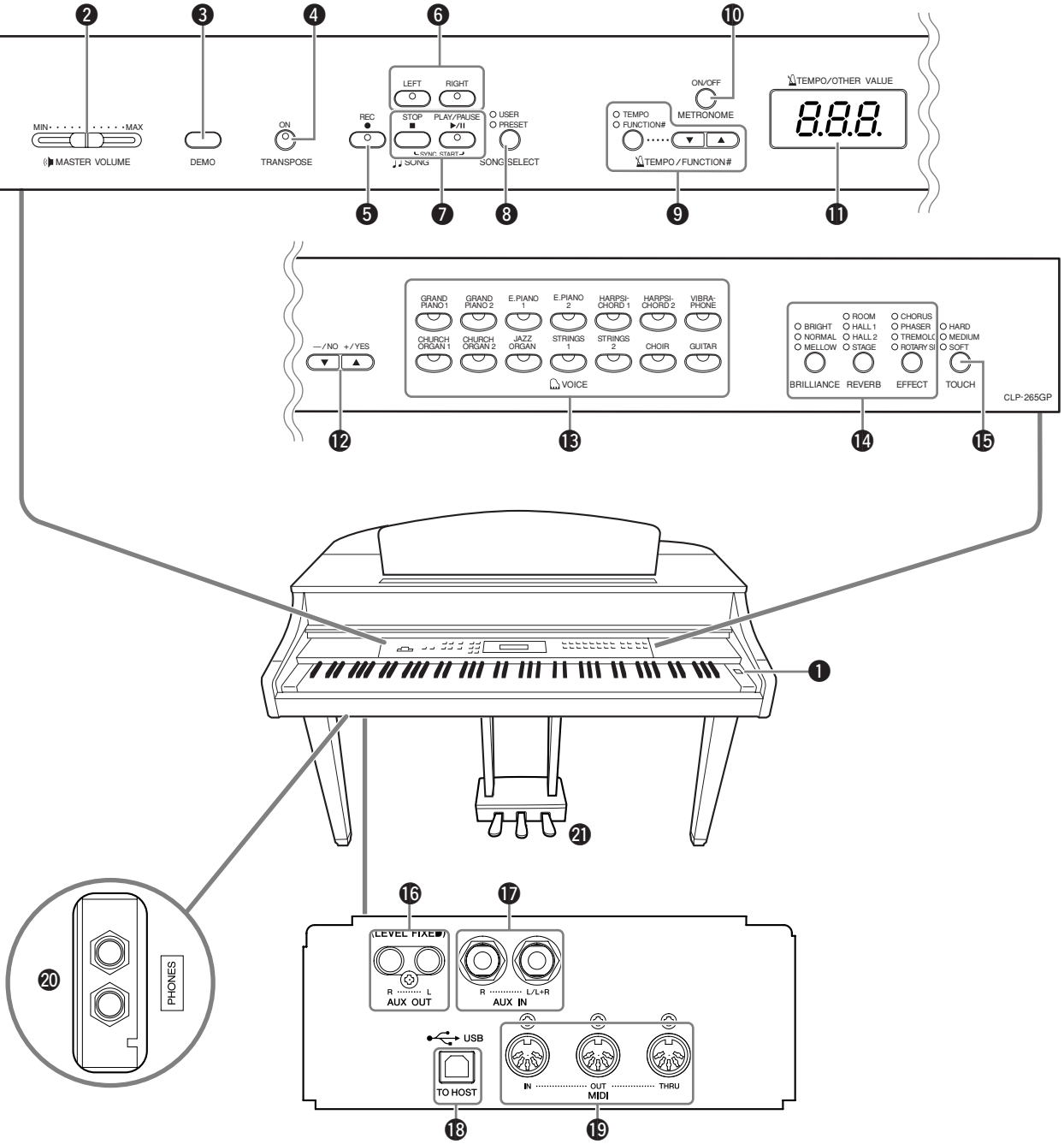

❶ [POWER] switch
❷ [MASTER VOLUME] slider
❸ [DEMO] button
❹ [TRANSPOSE] button
❺ [REC] button
❻ [RIGHT],[LEFT] buttons
❼ [PLAY/PAUSE],[STOP] buttons
❽ [SONG SELECT] button
❾ [TEMPO/FUNCTION#] button
❿ [METRONOME] button
⓫ Display
⓬ [–/NO],[+/YES] buttons
⓭ Voice group buttons
⓮ [BRILLIANCE],[REVERB],[EFFECT] buttons
⓯ [TOUCH] button
⓰ AUX OUT [L][R] (LEVEL FIXD) jacks
⓱ AUX IN [L/L+R] [R] jacks
⓲ USB [TO HOST] terminal
⓳ MIDI [IN][OUT][THRU] terminals
⓴ [PHONES] jacks
㉑ PEDALS

■ DISASSEMBLY PROCEDURE

1. Music Rest Assembly (Time required: About 1 minute)

1-1 Remove the four (4) screws marked [S13]. The music rest assembly can then be removed. (Fig.1)

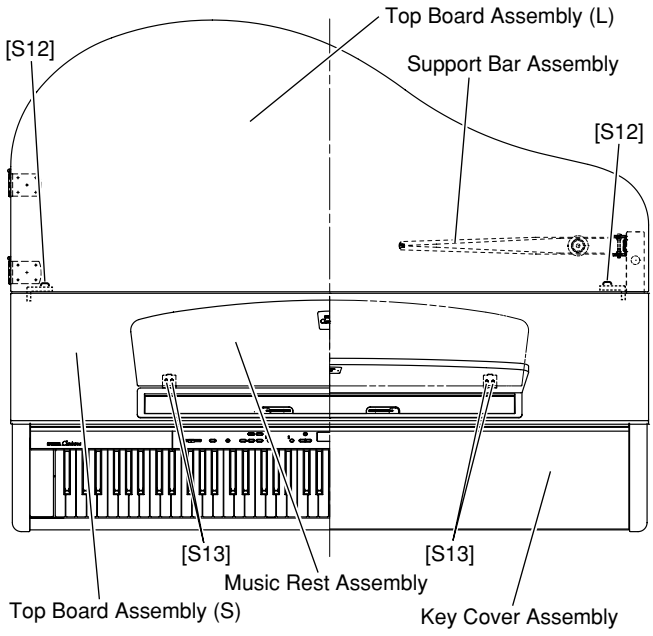

[S12]: Bind Head Screw 4.0X14 MFZN2B3 (WE983100)
[S13]: Bind Head Tapping Screw-1 3.0X16 MFZN2B3 (WE971200)

(Fig.1)

2. Top Board Assembly (L) (Time required: About 3 minutes)

2-1 Remove the two (2) hinge shafts. The top board assembly (L) can then be removed. (Fig.2, Fig.3)

3. Top Board Assembly (S) (Time required: About 5 minutes)

* Before disassembling the top board assembly (S), shut up the key cover assembly completely to protect the key cover assembly from being scratched.

3-1 Remove the top board assembly (L) . (See procedure 2.)

3-2 Remove the two (2) screws marked [S12]. (Fig.1)

3-3 Slide the top board assembly (S) forward and lift it.

• Removal of the hinge shaft



Remove the two (2) hinge shafts one by one.

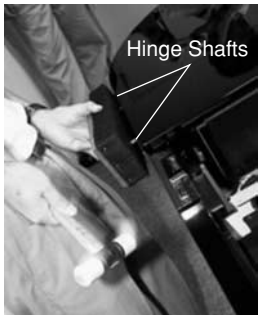

(Fig.2)

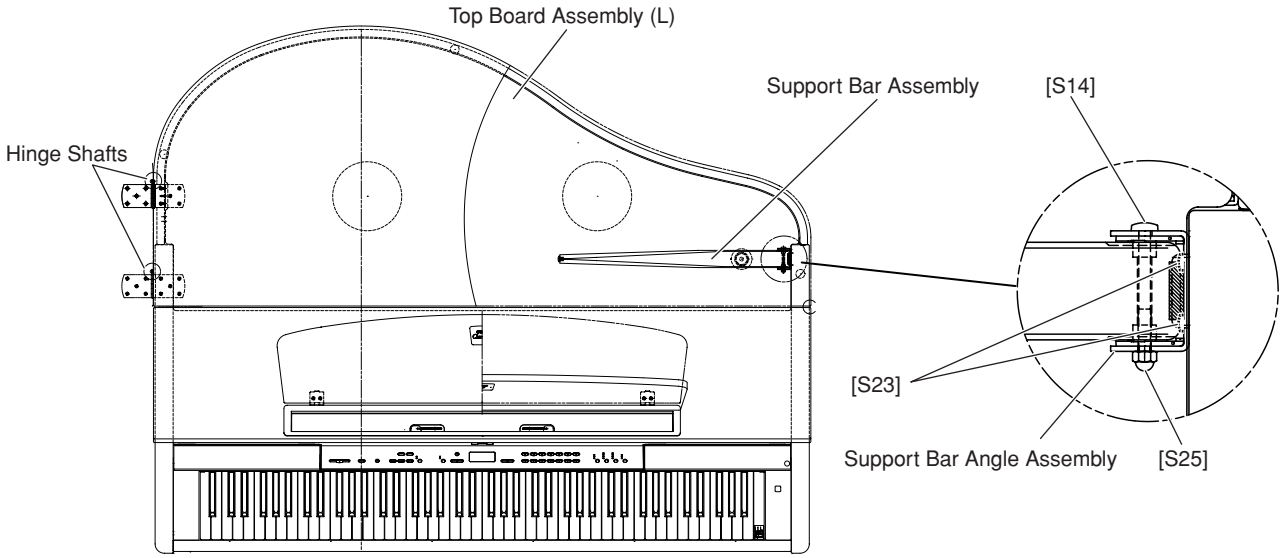

[S14]: Bind Head Screw 5.0X50 MFZN2B3 (WJ346900)
[S23]: Bind Head Tapping Screw-1 3.5X16 MFZN2B3 (WE955100)
[S25]: Nut Hex Cap #3 M5 MFZN2B3 (WJ347000)

(Fig.3)

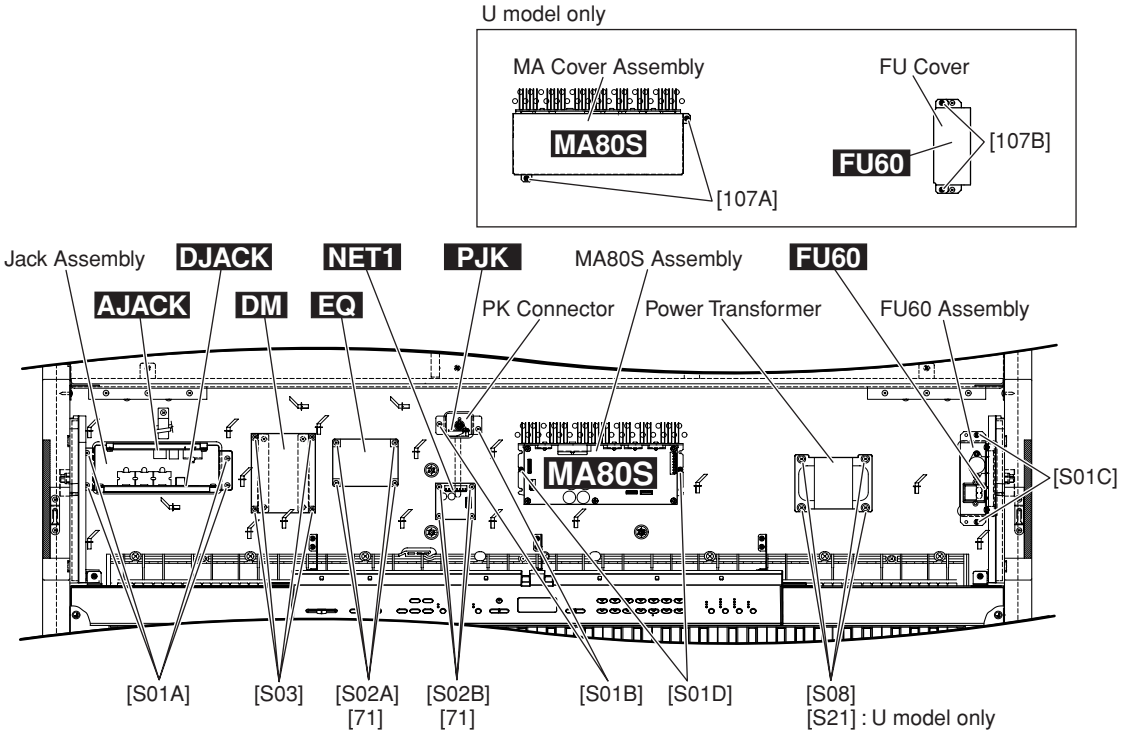

[S01A-D]: Bind Head Tapping Screw-1 3.5X12 MFZN2W3 (WE970900)
[S02A,B]: Bind Head Tapping Screw-1 3.5X20 MFZN2W3 (WE971500)
[S03]: Bind Head Tapping Screw-B 3.0X8 MFZN2W3 (WE774300)
[S08]: Bind Head Screw 4.0X18 MFZN2-W3 (WG402400)
[S21]: Flat Washer 4.0X12X1.0 MFZN2W3 (WF578800)
[71]: Spacer (CB040950)
[107A,B]: Bind Head Tapping Screw-1 3.5X12 MFZN2W3 (WE970900)

(Fig.4)

Circuit board and Assembly	Ref.No.	Screw	QTY	Fig.
DM	S03	Bind Head Tapping Screw-B 3.0X8 MFZN2W3 (WE774300)	4	4
EQ	S02A	Bind Head Tapping Screw-1 3.5X20 MFZN2W3 (WE971500)	4	4
	71 (*1)	Spacer (CB040950)	4	4
NET1	S02B	Bind Head Tapping Screw-1 3.5X20 MFZN2W3 (WE971500)	4	4
	71 (*1)	Spacer (CB040950)	4	4
MA Cover Assembly (U model only)	107A (*2)	Bind Head Tapping Screw-1 3.5X12 MFZN2W3 (WE970900)	2	4
MA80S Assembly	S01D	Bind Head Tapping Screw-1 3.5X12 MFZN2W3 (WE970900)	2	4
FU Cover (U model only)	107B(*2)	Bind Head Tapping Screw-1 3.5X12 MFZN2W3 (WE970900)	2	4
FU60 Assembly	S01C	Bind Head Tapping Screw-1 3.5X12 MFZN2W3 (WE970900)	2	4
Jack Assembly	S01A	Bind Head Tapping Screw-1 3.5X12 MFZN2W3 (WE970900)	4	4
PK Connector	S01B	Bind Head Tapping Screw-1 3.5X12 MFZN2W3 (WE970900)	2	4
Power Transformer	S08	Bind Head Screw 4.0X18 MFZN2-W3 (WG402400)	4	4
	S21(*2)	Flat Washer 4.0X12X1.0 MFZN2W3(WF578800)	4	4

*1: Do not lose the spacers marked [71] while disassembling.

*2: These parts are used for U model only.

(Table 1)

4. Circuit Boards & Assemblies (Main Unit) (Time required: About 6 minutes each)

4-1 Remove the top board assembly (L) . (See procedure 2.)
4-2 Remove the top board assembly (S). (See procedure 3.)
4-3 Each circuit board and assembly can be removed by removing its fixing screws as shown in table1. (Fig.4, Table 1)

5. Key Cover Assembly (Time required: About 6 minutes)

5-1 Remove the top board assembly (L) . (See procedure 2.)
5-2 Remove the top board assembly (S). (See procedure 3.)
5-3 Remove the screw marked [S03] for each side. The rack covers L and R can then be removed. (Fig.5)
5-4 Set both ends of the rod to the slits of the rack and then lift the rear portion of the key cover assembly. (Fig.6)
5-5 Lean the key cover assembly slightly, and remove the guide pins from the guide rail. At that time, it is noted not to damage the side cover. (Fig.6)
* When assembling, be sure not to make scratches on the side cover assembly.
* When assembling, set both ends of the rod to the slits of the rack accurately.

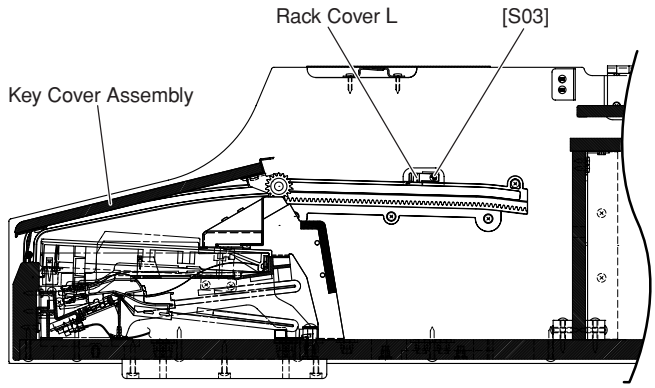

[S03]: Bind Head Tapping Screw-B 3.0X8 MFZN2W3 (WE774300)

(Fig.5)

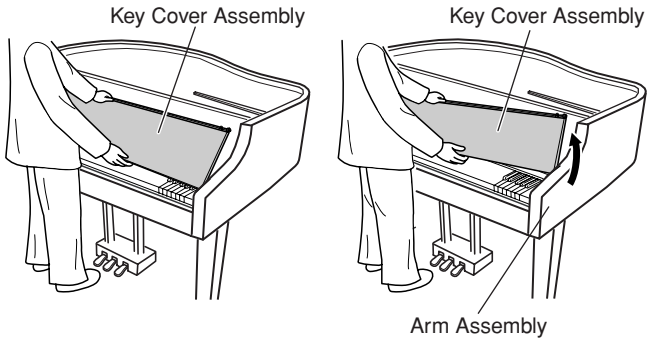

(Fig.6)

6. AJACK & DJACK Circuit Boards (Time required: About 7 minutes)

6-1 Remove the top board assembly (L) . (See procedure 2.)
6-2 Remove the top board assembly (S). (See procedure 3.)
6-3 Remove the jack assembly. (See procedure 4.)

6-4 AJACK Circuit Board

6-4-1 Remove the screw marked [4A]. (Fig.7)
6-4-2 Remove the two (2) hexagonal nuts marked [6] and the two (2) washers marked [5]. (Fig.7)
6-4-3 Remove the two (2) screws marked [7A]. The AJACK circuit board can then be removed from the jack assembly. (Fig.7)

6-5 DJACK Circuit Board

6-5-1 Remove the three (3) screws marked [4B]. (Fig.7)
6-5-2 Remove the two (2) screws marked [7B]. The DJACK circuit board can then be removed from the jack assembly. (Fig.7)

7. MA80S Circuit Board (Time required: About 8 minutes)

7-1 Remove the top board assembly (L) . (See procedure 2.)
7-2 Remove the top board assembly (S). (See procedure 3.)
7-3 Remove the MA cover. (U model only)(See procedure 4.)
7-4 Remove the MA80S assembly. (See procedure 4.)
7-5 Remove the five (5) screws marked [1], the three (3) screws marked [2] and the screw marked [3]. The MA80S circuit board can then be removed from the MA80S assembly. (Fig.8)

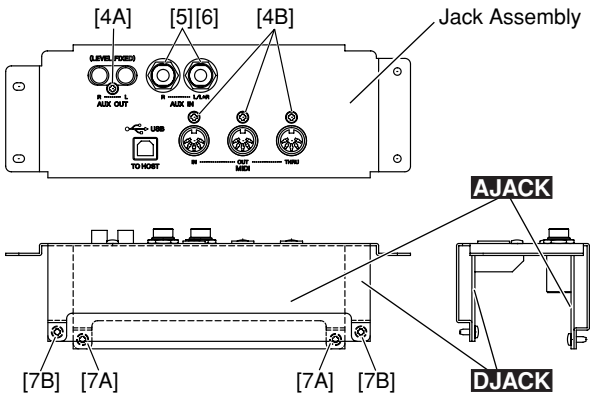

[4A,B]: Bind Head Tapping Screw-B 3.0X8 MFZN2W3 (WE774300)
[5]: Washer BLACK (VJ869400)
[6]: Special Nut M12X14X2 P=1.0 (WF559900)
[7A,B]: Bind Head Tapping Screw-B 3.0X8 MFZN2W3 (WE774300)

(Fig.7)

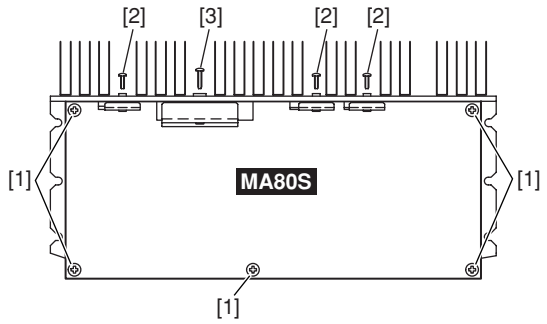

[1]: Bind Head Tapping Screw-B 4.0X8 MFZN2W3 (WE974600)
[2]: Bind Head Tapping Screw-B 3.0X10 MFZN2W3 (WE774200)
[3]: Bind Head Tapping Screw-B 3.0X16 MFZN2W3 (WE973400)

(Fig.8)

8. FU60 Circuit Board (Time required: About 7 minutes)

8-1 Remove the top board assembly (L) . (See procedure 2.)
8-2 Remove the top board assembly (S). (See procedure 3.)
8-3 Remove the FU cover. (U model only)(See procedure 4.)
8-4 Remove the FU60 assembly. (See procedure 4.)
8-5 Remove the two (2) screws marked [4] and the two (2) nuts marked [5]. (N model only) (Fig.9)
8-6 Remove the two (2) screws marked [1] and the two (2) screws marked [6]. The FU60 circuit board can then be removed from the FU60 assembly. (Fig.9)

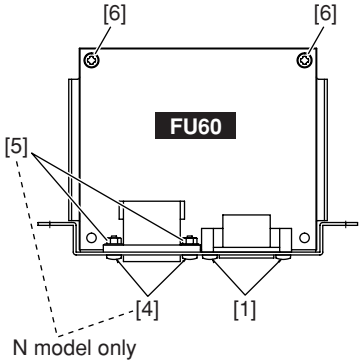

[1]: Bind Head Tapping Screw-B 3.0X8 MFZN2B3 (WE774400)
[4]: Bind Head Screw 3.0X10 MFZN2B3 (WF304400)
[5]: Hexagonal Nut M3 (WF559800)
[6]: Bind Head Tapping Screw-B 3.0X12 MFZN2W3 (WE987400)

(Fig.9)

9. PJK Circuit Board (Time required: About 7 minutes)

9-1 Remove the top board assembly (L) . (See procedure 2.)
9-2 Remove the top board assembly (S). (See procedure 3.)
9-3 Disconnect the PK-LF cable. (Fig.10)
9-4 Remove the PK connector. (See procedure 4.)
9-5 Remove the two (2) screws marked [41c]. The PJK circuit board can then be removed from the PK connector. (Fig.11)

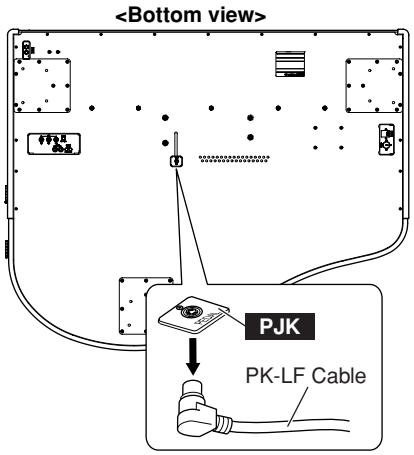

(Fig.10)

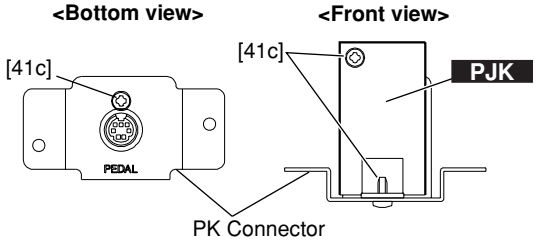

[41c]: Bind Head Tapping Screw-B 3.0X8 MFZN2B3 (WE774400)

(Fig.11)

10. Panel Assembly (Time required: About 8 minutes)

10-1 Remove the top board assembly (L) . (See procedure 2.)
10-2 Remove the top board assembly (S). (See procedure 3.)
10-3 Remove the key cover assembly. (See procedure 5.)
10-4 Remove the two (2) screws marked [S10] and the six (6) screws marked [S01]. The panel assembly can then be removed. (Fig.12)

11. PNL, PNR, MV Circuit Boards (Panel Assembly) (Time required: About 10 minutes)

11-1 Remove the top board assembly (L) . (See procedure 2.)
11-2 Remove the top board assembly (S). (See procedure 3.)
11-3 Remove the key cover assembly. (See procedure 5.)
11-4 Remove the panel assembly. (See procedure 10.)

11-5 PNL Circuit Board

11-5-1 Remove the two (2) screws marked [50B]. The panel holder assembly can then be removed. (Fig.13)
11-5-2 Remove the ten (10) screws marked [50E]. The PNL circuit board can then be removed. (Fig.13)

11-6 PNR Circuit Board

11-6-1 Remove the two (2) screws marked [50C]. The panel holder assembly can then be removed. (Fig.13)
11-6-2 Remove the eight (8) screws marked [50F]. The PNR circuit board can then be removed. (Fig.13)

11-7 MV Circuit Board

11-7-1 Remove the slide knob (MASTER VOLUME). (Fig.12)

11-7-2 Remove the two (2) screws marked [50A]. The panel holder assembly can then be removed. (Fig.13)

11-7-3 Remove the four (4) screws marked [50D]. The MV circuit board can then be removed. (Fig.13)

* When assembling each circuit board, confirm the LED heads have gone into the panel holes correctly.

12. End Block Assembly (L,R) (Time required: About 9 minutes each)

12-1 Remove the top board assembly (L) . (See procedure 2.)

12-2 Remove the top board assembly (S). (See procedure 3.)

12-3 Remove the key cover assembly. (See procedure 5.)

12-4 Remove the panel assembly. (See procedure 10.)

12-5 Remove the screw marked [S11] and the washer marked [S22] for each side. The end block assemblies L and R can then be removed. (Fig.12, Fig.14)

13. Power Switch Assembly (Time required: About 10 minutes)

13-1 Remove the top board assembly (L) . (See procedure 2.)

13-2 Remove the top board assembly (S). (See procedure 3.)

13-3 Remove the key cover assembly. (See procedure 5.)

13-4 Remove the panel assembly. (See procedure 10.)

13-5 Remove the end block assembly R. (See procedure 12.)

13-6 Remove the two (2) screws marked [8]. The power switch assembly can then be removed. (Fig.14)

14. HP Jack Assembly, HP Circuit Board (Time required: About 10 minutes)

14-1 Remove the top board assembly (L) . (See procedure 2.)

14-2 Remove the top board assembly (S). (See procedure 3.)

14-3 Remove the key cover assembly. (See procedure 5.)

14-4 Remove the panel assembly. (See procedure 10.)

14-5 Remove the end block assembly L. (See procedure 12.)

14-6 Remove the three (3) screws marked [S01]. The HP jack assembly can then be removed. (Fig.14)

14-7 Remove the two (2) nuts marked [3]. The HP circuit board can then be removed from the HP jack assembly. (Fig.14)

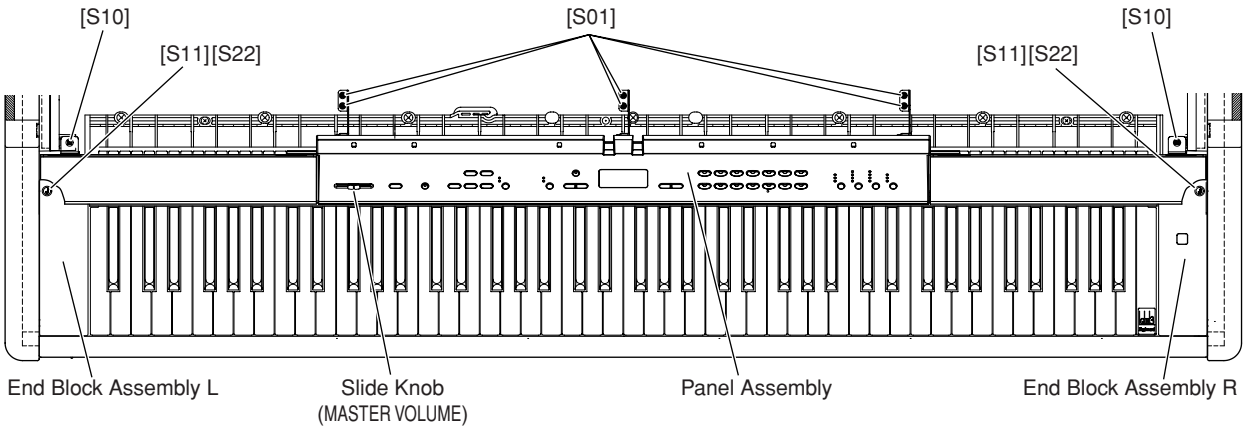

[S01]: Bind Head Tapping Screw-1 3.5X12 MFZN2W3 (WE970900)
[S10]: Bind Head Tapping Screw-B 4.0X10 MFZN2W3 (WE974500)
[S11]: Bind Head Tapping Screw-B 4.0X20 MFZN2W3 (WH513800)
[S22]: Flat Washer 4.0X8X0.8 MFZN2W3 (WF578600)

(Fig.12)

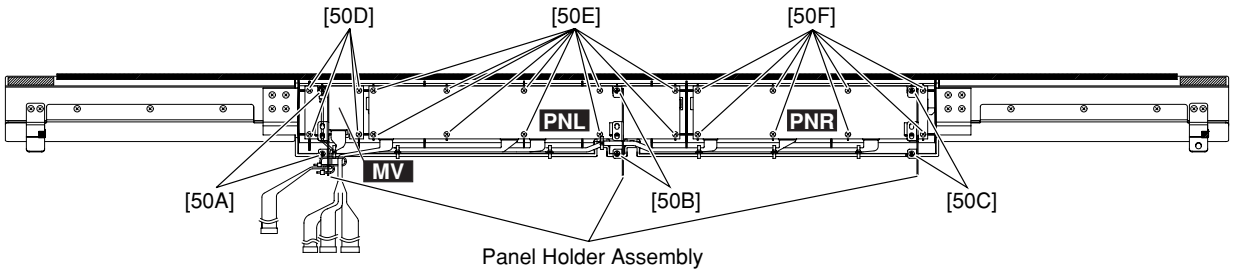

[50A-F]: Bind Head Tapping Screw-B 3.0X8 MFZN2W3 (WE774300)

(Fig.13)

15. Keyboard Assembly (Time required: About 11 minutes)

15-1 Remove the top board assembly (L) . (See procedure 2.)
15-2 Remove the top board assembly (S). (See procedure 3.)
15-3 Remove the key cover assembly. (See procedure 5.)
15-4 Remove the panel assembly. (See procedure 10.)
15-5 Remove the end block assemblies L and R. (See procedure 12.)
15-6 Remove the two (2) screws marked [S05] and the seven (7) screws marked [S04]. (Fig.15)
15-7 Move the keyboard assembly backward, hold the central area of it, and get it upright to remove. (Fig.16)

* Holding both side ends of the keyboard assembly may twist and damage the frame.

* When assembling the keyboard assembly to the main unit, tighten the screws marked [S05] and the screws marked [S04] in this order. (Fig.15)

16. PL Circuit Board (Time required: About 12 minutes)

16-1 Remove the top board assembly (L) . (See procedure 2.)
16-2 Remove the top board assembly (S). (See procedure 3.)
16-3 Remove the key cover assembly. (See procedure 5.)
16-4 Remove the panel assembly. (See procedure 10.)
16-5 Remove the end block assemblies L and R. (See procedure 12.)
16-6 Remove the keyboard assembly. (See procedure 15.)
16-7 Remove the screw marked [7]. The PL circuit board can then be removed. (Fig.15)

17. Support Bar Assembly (Time required: About 4 minutes)

17-1 Remove the top board assembly (L). (See procedure 2.)
17-2 Remove the screw marked [S14] and the nut marked [S25]. The support bar assembly can then be removed. (Fig.3)

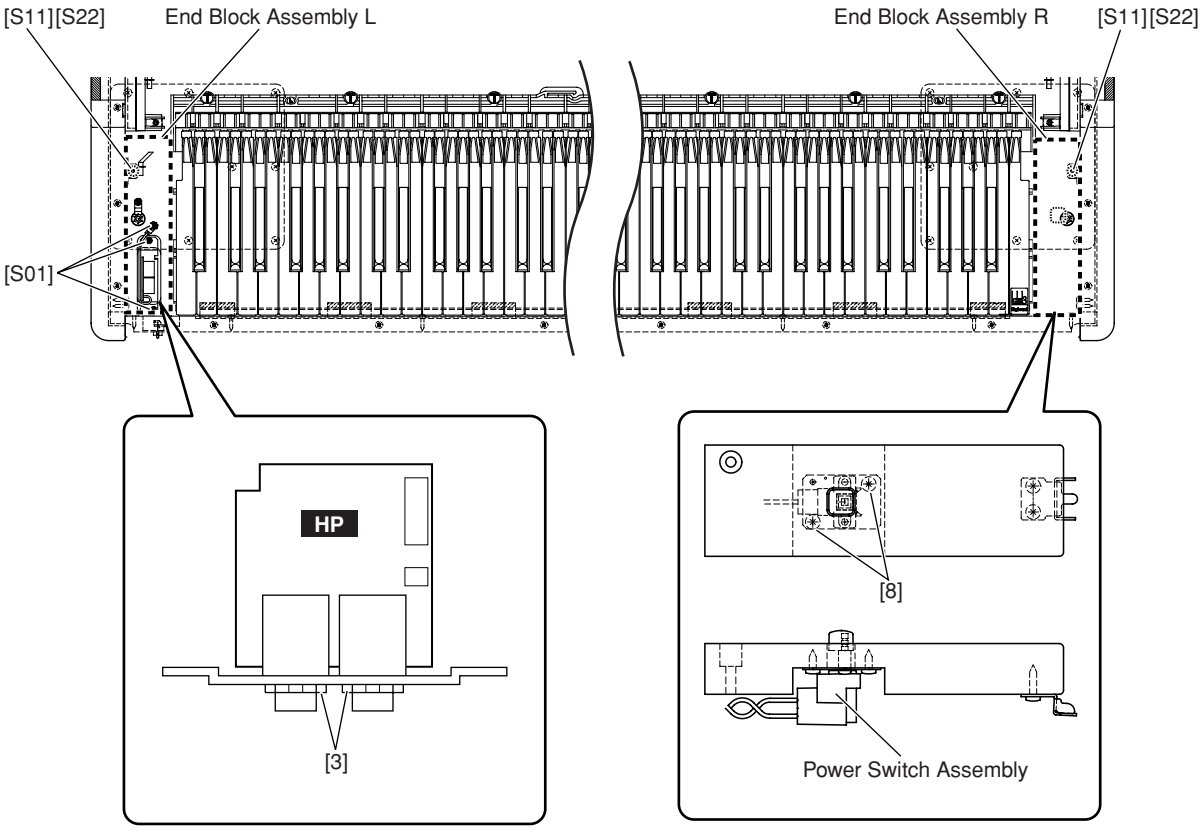

[3]: Special Nut M12X14X2 P=1.0 (WF559900)
[8]: Bind Head Tapping Screw-1 3.5X10 MFZN2W3 (WE970800)
[S01]: Bind Head Tapping Screw-1 3.5X12 MFZN2W3 (WE970900)
[S11]: Bind Head Tapping Screw-B 4.0X20 MFZN2W3 (WH513800)
[S22]: Flat Washer 4.0X8X0.8 MFZN2W3 (WF578600)

(Fig.14)

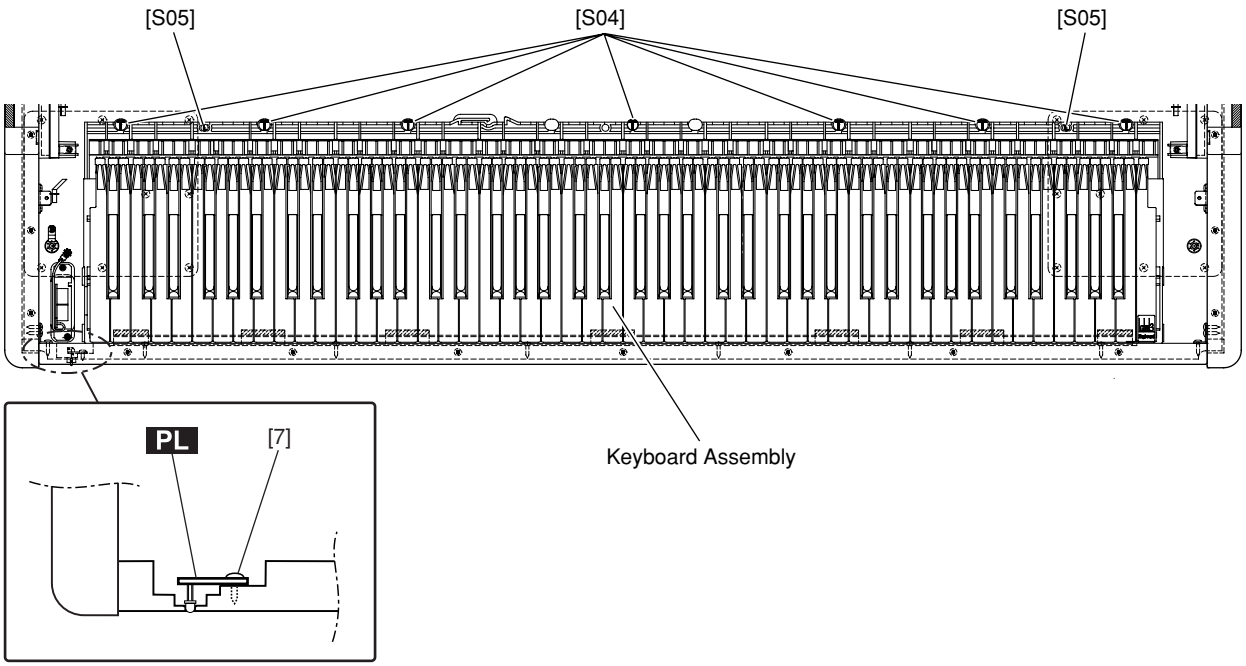

[7]: Bind Head Tapping Screw-1 3.5X10 MFZN2W3 (WE970800)
[S04]: Pan Head Screw 5.0X30 MFZN2W3 (WF786700)
[S05]: Bind Head Tapping Screw-1 4.0X14 MFZN2W3 (WE971900)

(Fig.15)

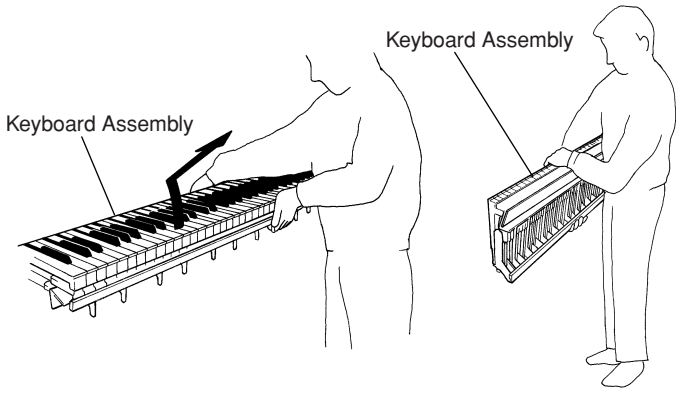

(Fig.16)

18. Speaker Grille Assembly, Partition Assembly C (Time required: About 7 minutes)

* Before disassembling the speaker grille assembly and the partition assembly C, surely remove the top board assembly (L) and the support bar assembly.

18-1 Remove the top board assembly (L). (See procedure 2.)

18-2 Remove the support bar assembly. (See procedure 17.)

18-3 Remove the two (2) screws marked [S23]. The support bar angle assembly can then be removed. (Fig.3)

18-4 Remove the speaker grille assembly. (Fig.17)

* The speaker grille assembly is fixed by the five (5) dual lock fasteners. (Fig.17)

18-5 Remove the eleven (11) screws marked [S18]. The partition assembly C can then be removed. (Fig.17)

19. Speaker (Woofer) (Time required: About 8 minutes each)

19-1 Remove the top board assembly (L). (See procedure 2.)

19-2 Remove the support bar assembly. (See procedure 17.)

19-3 Remove the speaker grille assembly. (See procedure 18.)

* The speakers (Woofers) are fixed on the partition assembly C.

19-4 Remove the four (4) screws marked [S20]. The speaker (woofer) can then be removed. (Fig.17)

* The left and right speakers (woofers) can be removed in the same manner.

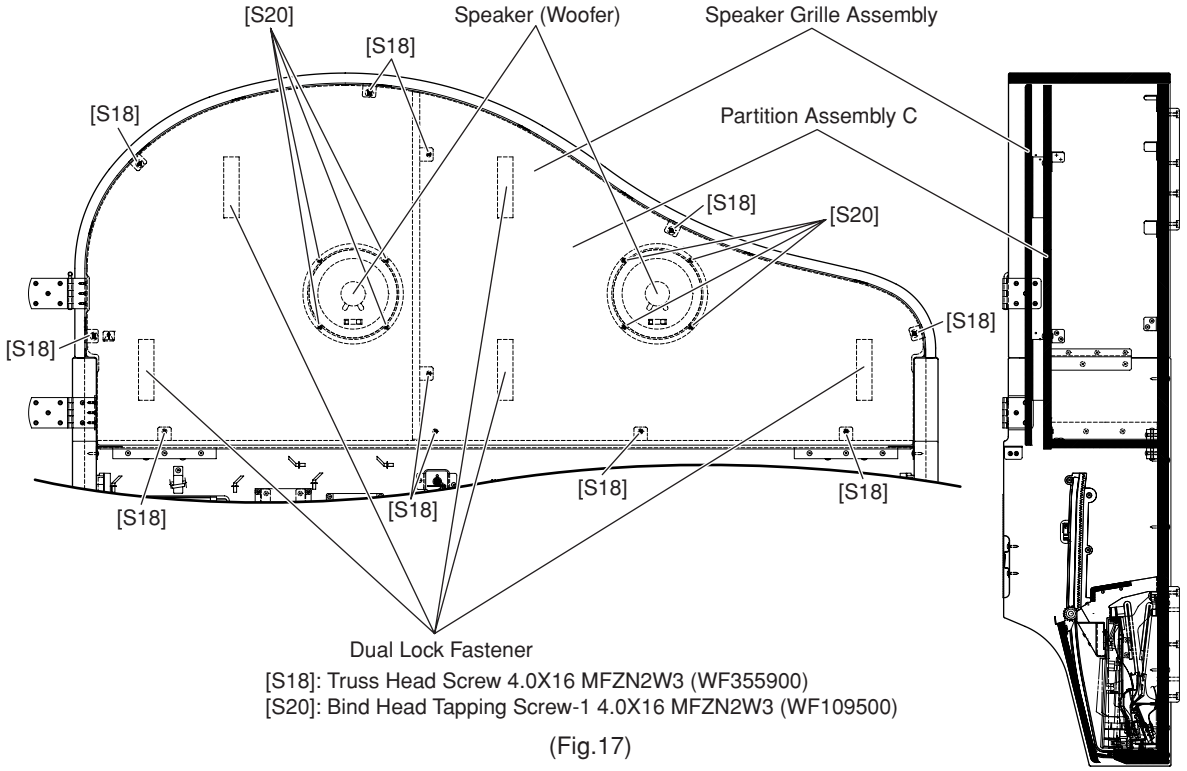

[S18]: Truss Head Screw 4.0X16 MFZN2W3 (WF355900)
[S20]: Bind Head Tapping Screw-1 4.0X16 MFZN2W3 (WF109500)

(Fig.17)

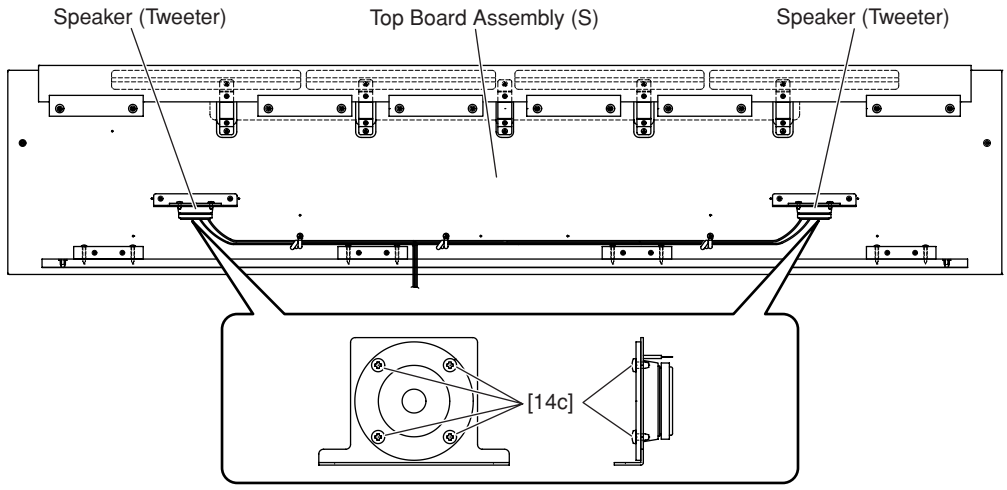

[14c]: Bind Head Tapping Screw-B 4.0X8 MFZN2W3 (WE974600)

(Fig.18)

20. Speaker (Tweeter) (Time required: About 6 minutes each)

20-1 Remove the top board assembly (L) . (See procedure 2.)

20-2 Remove the top board assembly (S). (See procedure 3.)

* The speakers (tweeters) are fixed on the top board assembly (S).

20-3 Remove the four (4) screws marked [14c]. The speaker (tweeter) can then be removed. (Fig.18)

* The left and right speakers (tweeters) can be removed in the same manner.

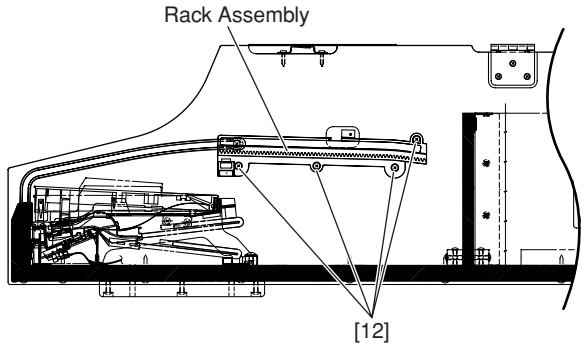

[12]: Bind Head Tapping Screw-1 3.5X20 MFZN2W3 (WE971500)

(Fig.19)

21. Rack Assembly (L, R) (Time required: About 7 minutes each)

21-1 Remove the top board assembly (L) . (See procedure 2.)

21-2 Remove the top board assembly (S). (See procedure 3.)

21-3 Remove the key cover assembly. (See procedure 5.)

21-4 Remove the four (4) screws marked [12]. The rack assembly can then be removed. (Fig.19)

* The rack assemblies L and R can then be removed in the same manner.

22. Arm Assembly (L,R) (time required: About 19 minutes each)

22-1 Remove the top board assembly (L) . (See procedure 2.)

22-2 Remove the top board assembly (S). (See procedure 3.)

22-3 Remove the key cover assembly. (See procedure 5.)

22-4 Remove the panel assembly. (See procedure 10.)

22-5 Remove the end block assemblies L and R. (See procedure 12.)

22-6 Remove the keyboard assembly. (See procedure 15.)

22-7 Remove the support bar assembly. (See procedure 17.)

22-8 Remove the speaker grille assembly and the partition assembly C. (See procedure 18.)

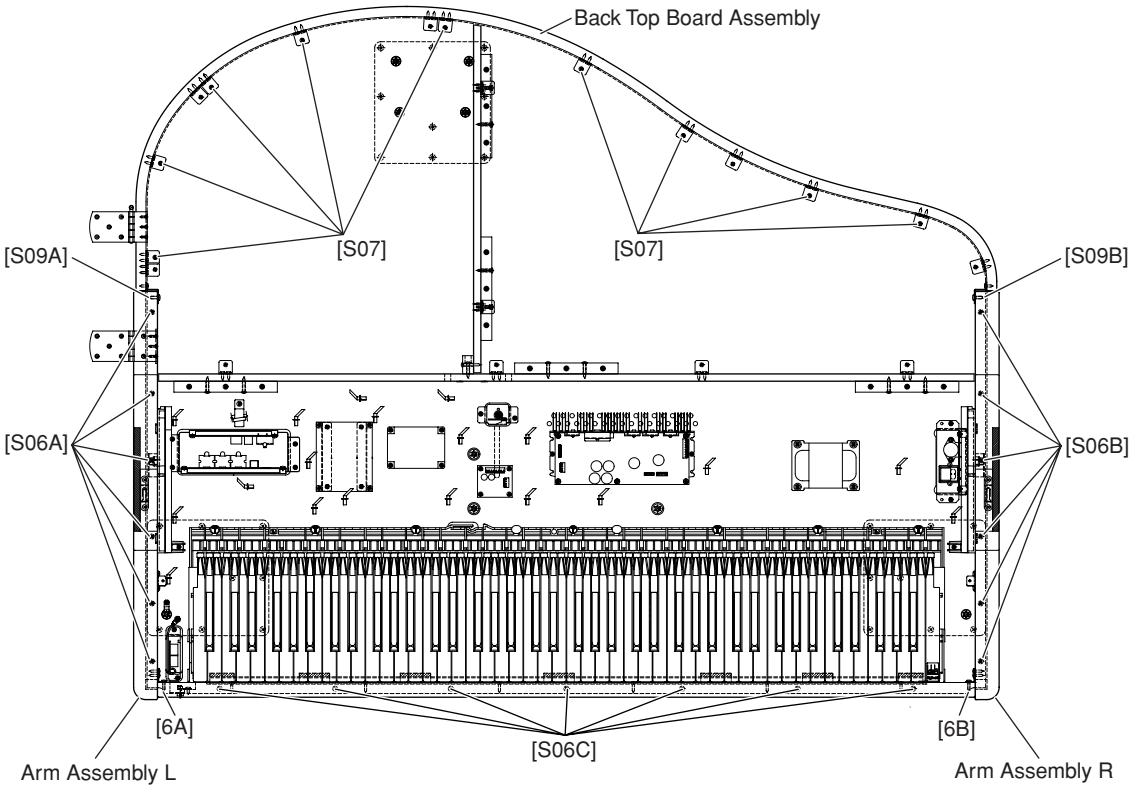

[6A,B]: Bind Head Tapping Screw-1 3.5X16 MFZN2W3 (WE970700)
[S06A-C]: Truss Head Tapping Screw-1 3.5X35 MFZN2W3 (WH513700)
[S07]: Truss Head Tapping Screw-1 3.5X16 MFZN2W3 (WF743500)
[S09A,B]: Hex.Head Tapping Screw-1 4.0X16 MFZN2W3 (WF746600)

(Fig.20)

22-9 Arm Assembly L

22-9-1 Remove the three (3) screws marked [S09A], the six (6) screws marked [S06A] and the two (2) screws marked [6A]. The arm assembly L can then be removed. (Fig.20)

22-10 Arm Assembly R

22-10-1 Remove the three (3) screws marked [S09B], the six (6) screws marked [S06B] and the two (2) screws marked [6B]. The arm assembly R can then be removed. (Fig.20)

23. Back Top Board Assembly (Time required: About 9 minutes)

23-1 Remove the top board assembly (L). (See procedure 2.)
23-2 Remove the support bar assembly. (See procedure 17.)
23-3 Remove the speaker grille assembly and the partition assembly C. (See procedure 18.)
23-4 Remove the three (3) screws marked [S09A] and the three (3) screws marked [S09B]. (Fig.20)
23-5 Remove the nine (9) screws marked [S07]. The back top board assembly can then be removed. (Fig.20)

24. Front Rail Assembly (Time required: About 10 minutes)

24-1 Remove the top board assembly (L) . (See procedure 2.)
24-2 Remove the top board assembly (S). (See procedure 3.)
24-3 Remove the key cover assembly. (See procedure 5.)
24-4 Remove the panel assembly. (See procedure 10.)
24-5 Remove the end block assemblies L and R. (See procedure 12.)
24-6 Remove the keyboard assembly. (See procedure 15.)
24-7 Remove the two (2) screws marked [6A], the two (2) screws marked [6B] and the seven (7) screws marked [S06C]. The front rail assembly can then be removed. (Fig.20)

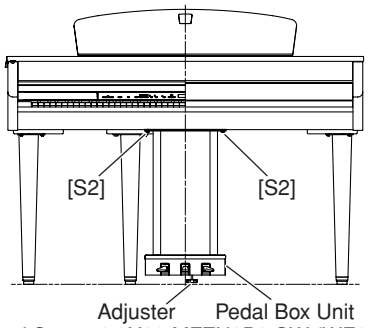

[S2]: Pan Head Screw 6.0X20 MFZN2B3 SW (WF003300)

(Fig.21)

25. Pedal Box Unit, Pedal Assembly (Time required: About 5 minutes)

25-1 Rotate the adjuster until it comes off the floor surface.
25-2 Disconnect the PK-LF cable. (Fig.10)
25-3 Remove the four (4) screws marked [S2]. The pedal box unit can then be removed. (Fig.21)
25-4 Remove the nine (9) screws marked [5]. The pedal assembly can then be removed. (Fig.22)

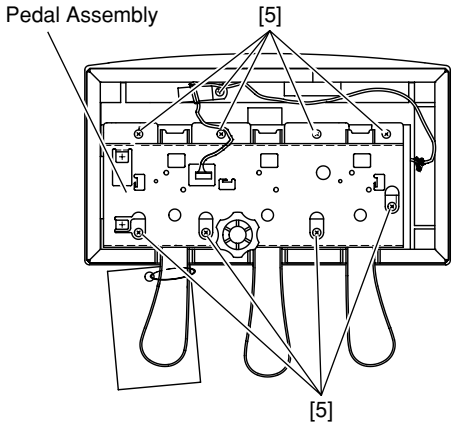

[5]: Bind Head Tapping Screw-1 4.0X14 MFZN2W3 (WE971900)

(Fig.22)

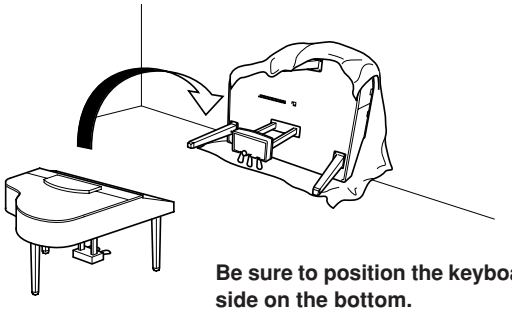

Be sure to position the keyboard side on the bottom.

(Fig.23)

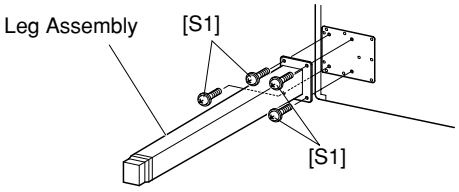

[S1]: Pan Head Screw 6.0X40 MFZN2B3 SP (WE995700)

(Fig.24)

26. Leg Assembly (Time required: About 10 minutes)

* For safety, this work should be done by two persons.

26-1 Lay the unit on the floor. (Fig.23)

26-2 Remove the four (4) screws marked [S1]. The leg assembly can then be removed. (Fig.24, Fig.25)

* The front left, front right and rear leg assembly each can then be removed in the same manner.

How to position the main unit

Spread a large soft cloth, such as a blanket, on the floor. Place the unit on the cloth with the key cover closed and the keyboard side on the bottom and lean the unit against the wall so that the unit will not fall or slip.
Place a soft cloth against the wall to protect the instrument and the wall from scratches.
Be sure to position the keyboard side on the bottom.

Refer to the diagram below to verify the orientation of the legs. (Fig. 25)

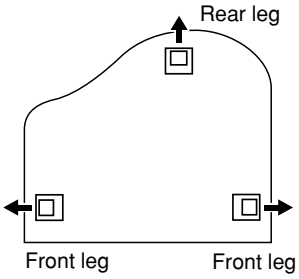

(Fig.25)

27. Disassembling the GH3 Keyboard (Time required: About 16 minutes)

* After inserting a round stick (Rod: TX000670) between the frame and keys, remove the circuit boards. (Fig.28)

27-1 Remove the keyboard assembly from the main unit. (See procedure 15.)

27-2 GH3_EBUS circuit board L

Remove the five (5) screws marked [260A] and the screw marked [262A]. The GH3_EBUS circuit board L can then be removed. (Fig.26)

27-3 GH3_EBUS circuit board M

Remove the four (4) screws marked [260B], the screw marked [262A] and the screw marked [262B]. The GH3_EBUS circuit board M can then be removed. (Fig.26)

27-4 GH3_EBUS circuit board H

Remove the five (5) screws marked [260C] and the screw marked [262B]. The GH3_EBUS circuit board H can then be removed. (Fig.26)

* Keys can be removed without removing the circuit boards.

* The rubber contact can be removed after the GH3_EBUS circuit boards L, M and H are removed.

27-5 White key (Black key)

Insert a thin plate between the white keys, near the triangle mark around the fulcrum of the key, and press down the stopper marked [A] to remove the key. (Fig.27, Fig.28)

* Take care not to damage the key spring when removing a key.

* A black key can be removed after the white keys on either side have been removed.

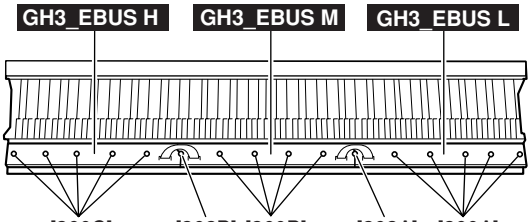

[260A-C]: Bind Head Tapping Screw-P 3.0X10 MFZN2 (VT413400)
[260A-C]: Bind Head Tapping Screw-P 3.0X10 MFZN2W3 (WF001000)
[262A,B]: PW Head Tapping Screw-P 3.0X10-10 MFZN2W3 (WF765500)

(Fig.26)

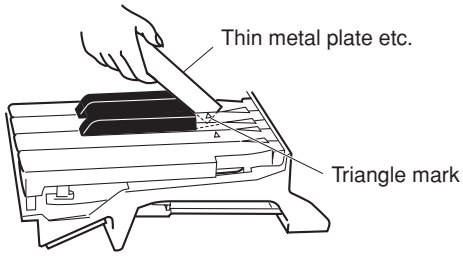

(Fig.27)

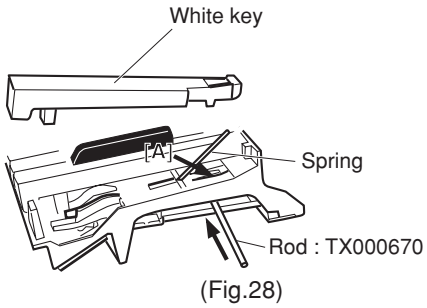

(Fig.28)

27-6 Hammer, White (Black) Key

After a key has been removed, push the key spring down once to take it out of the hook. (Fig.29)

Place the keyboard assembly upside down and peel away the stopper L88-W. The hammer of the white key can then be removed. (Fig.30)

* The hammer of the black key can then be removed in the same manner.

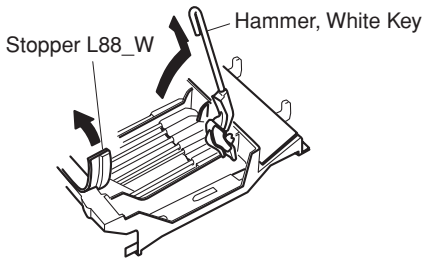

(Fig.30)

28. Assembling the GH3 Keyboard

28-1 Hammer, White (Black) Key

Place the keyboard assembly upside down, insert a hammer assembly into the frame, and put the stopper L88-W on. (Fig.31)

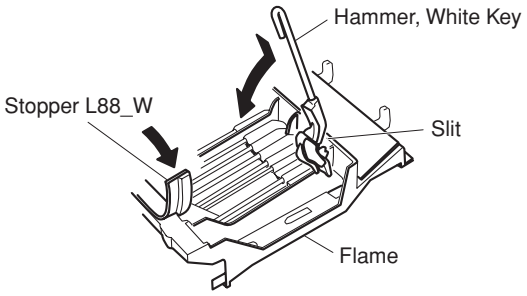

(Fig.31)

28-2 Key spring

Place the keyboard assembly right side up, and fix a key spring to the frame by setting it at the slit and pushing it down once. (Fig.32)

* ***Be careful of the direction of the spring. It should be installed with its projecting end facing upward. (Fig.32-1)***

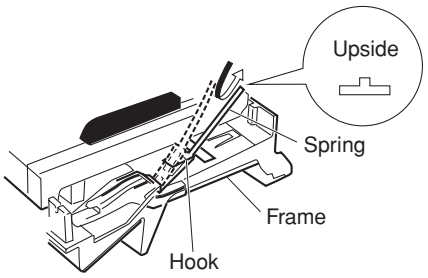

(Fig.32)

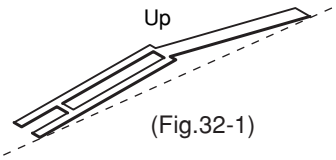

(Fig.32-1)

28-3 White (Black) key

After a key has been fit to part [F] and the key guide, make sure that the spring is fixed to the key.Then press part [E] of the key down. (Fig.33)

28-4 GH3_EBUS circuit board L

Tighten the five (5) screws marked [260A] and the screw marked [262A] to fix the GH3_EBUS circuit board L. (Fig.26)

28-5 GH3_EBUS circuit board M

Tighten the four (4) screws marked [260B], the screw marked [262A] and the screw marked [262B] to fix the GH3_EBUS circuit board M. (Fig.26)

28-6 GH3_EBUS circuit board H

Tighten the five (5) screws marked [260C] and the screw marked [262B] to fix the GH3_EBUS circuit board H. (Fig.26)

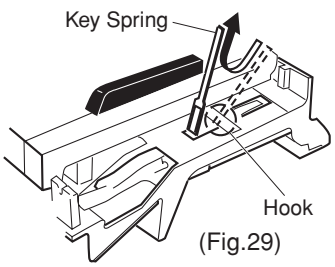

(Fig.29)

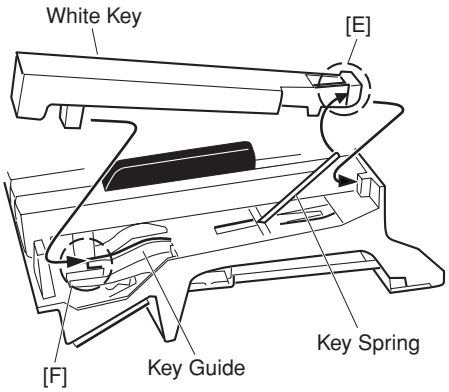

(Fig.33)

■ LSI PIN DESCRIPTION

CONTENTS

- **HD6433690B70FYV** (X6008200) **CPU** (E-HOSTs) 17
- **AK4385ET** (X6040A00) **DAC** (Digital to Analog Converter) 17
- **YMW767-VTZ** (X6055A00) **CPU** 18
- **ISP1161A1BD** (X5879A00) **USB CONTROLLER** 19
- μ**PD780031AYGK-NO6** (X2599200) **E-TKS** 19

● **HD6433690B70FYV** (X6008200) **CPU** (E-HOSTs)

DM:IC024

PIN NO.	NAME	I/O	FUNCTION	PIN NO.	NAME	I/O	FUNCTION
1	Avcc	-	Analog Power Supply (+3.3V)	25	/NMI	I	(Pull Up)
2	X2	O	Sub Clock Output	26	P80	O	- (NC)
3	X1	I	Sub Clock Input	27	P81	O	- (NC)
4	Vcl	-	Internal Power Supply (+3.3V)	28	P82	O	- (NC)
5	/RES	I	RESET input	29	P83	O	- (NC)
6	TEST	I	TEST input	30	P84	O	- (NC)
7	Vss	-	Ground	31	P85	I	(Pull Up or Vcc)
8	OSC2	O	Clock output	32	P86	O	- (NC)
9	OSC1	I	Clock input	33	P87	O	- (NC)
10	Vcc	-	Power supply	34	P20	O	SCK3 (Main CPU)
11	P50	O	- (NC)	35	P21	I	RXD (Pull Up)
12	P51	O	- (NC)	36	P22	O	TXD (Main CPU)
13	P52	I	Active Sensing ON/OFF	37	P14	I	/IRQ0 (Main CPU)
14	P53	O	- (NC)	38	P15	O	- (NC)
15	P54	O	- (NC)	39	P16	O	- (NC)
16	P55	O	- (NC)	40	P17	O	- (NC)
17	P10	O	- (NC)	41	PB4	I	Analog Controller (AN4)
18	P11	O	- (NC)	42	PB5	I	Analog Controller (AN5)
19	P12	O	/E-IC	43	PB6	I	Analog Controller (AN6)
20	P56	I/O	SDA	44	PB7	I	Analog Controller (AN7)
21	P57	I/O	SCL	45	PB3	I	Analog Controller (AN3)
22	P74	O	- (NC)	46	PB2	I	Analog Controller (AN2)
23	P75	O	- (NC)	47	PB1	I	Analog Controller (AN1)
24	P76	O	- (NC)	48	PB0	I	Analog Controller (AN0)

● **AK4385ET** (X6040A00) **DAC** (Digital to Analog Converter)

DM:IC011

PIN NO.	NAME	I/O	FUNCTION	PIN NO.	NAME	I/O	FUNCTION
1	MCLK	I	Master Clock	9	AOUTR-	O	Rch Analog out(-)
2	BICK	I	Audio Serial Data Clock	10	AOUTR+	O	Rch Analog out(+)
3	SDTI	I	Audio Serial Date Input	11	AOUTL-	O	Lch Analog out(-)
4	LRCK	I	L/R Clock	12	AOUTL+	O	Lch Analog out(+)
5	PDN	I	Power Down mode	13	Vss	-	Ground
6	CSN	I	Chip Select	14	VDD	-	Power Supply
7	CCLK	I	Control Data Input	15	DZFR	O	Rch Data Zero Input Detect
8	CDTI	I	Control Data Input	16	DZFL	O	Lch Data Zero Input Detect

● YMW767-VTZ (X6055A00) CPU

DM: IC004, IC007

Pin No.	NAME	I/O	FUNCTION	Pin No.	NAME	I/O	FUNCTION
1	VSS	-	VSS	65	VSS	-	VSS
2	TESTN	I	Input for TEST	66	IOVDD	-	IOVDD +3.3V
3	PLLBPN	I	PLL bypass select	67	LBN/LWRN/PF6	O	External memory lower-byte enable
4	PLLVDD	-	PLLVDD +2.5V	68	UBN/UWRN/PF7	O	External memory upper-byte enable
5	CIN	-	Capacitor terminal for PLL	69	RDN/PF4	O	External memory read enable
6	PLLVSS	-	PLLVSS	70	MD00	I/O	
7	TRSTN	I		71	MD08	I/O	
8	TMS	I	JTAG input	72	MD01	I/O	
9	TCK	I		73	MD09	I/O	External memory data bus
10	TDI	I		74	MD02	I/O	
11	TD0	O	JTAG output	75	MD10	I/O	
12	XI	I	Crystal oscillator	76	MD03	I/O	
13	XO	O	Crystal oscillator	77	VSS	-	VSS
14	VSS	-	VSS	78	MD11	I/O	
15	VDD	-	VDD +2.5V	79	MD04	I/O	
16	ICN	I	Hardware reset	80	MD12	I/O	
17	ECSN	I	CPU I/F chip select	81	MD05	I/O	
18	EWRN/PD5	I	CPU I/F write enable	82	MD13	I/O	External memory data bus
19	ERDN/PD4	I	CPU I/F read enable	83	MD06	I/O	
20	EA3/PD3	I		84	MD14	I/O	
21	EA2/PD2	I	CPU I/F address bus	85	MD07	I/O	
22	EA1/PD1	I		86	MD15	I/O	
23	EA0/PD0	I		87	WRN/PF5	O	External memory write enable
24	IOVDD	-	IOVDD +3.3V	88	VSS	-	VSS
25	ED0/PC0	I/O		89	VDD	-	VDD +2.5V
26	ED1/PC1	I/O		90	IOVDD	-	IOVDD +3.3V
27	ED2/PC2	I/O		91	MA17	O	
28	ED3/PC3	I/O	CPU I/F data bus	92	MA16	O	
29	ED4/PC4	I/O		93	MA15	O	
30	ED5/PC5	I/O		94	MA14	O	
31	ED6/PC6	I/O		95	MA13	O	
32	ED7/PC7	I/O		96	MA12	O	
33	VSS	-	VSS	97	MA11	O	External memory address bus
34	IRQ0N/PH0	I	Interrupt input	98	MA10	O	
35	TxD0	O	Serial output	99	MA09	O	
36	RxD0	I	serial input	100	MA08	O	
37	TxD1/PG2	O	Serial output	101	MA07	O	
38	RxD1/PH1	I	serial input	102	MA06	O	
39	SCLK1/PH2	I	External synchronization clock	103	MA05	O	
40	SD0	O	Serial output	104	VSS	-	VSS
41	SDI/PH3	I	serial input	105	MA04	O	
42	BCLK	O	Bit clock output	106	MA03	O	External memory address bus
43	WCLK/SY0	O	Word clock output	107	MA02	O	
44	SYSCLK/PG3	O	Clock output	108	MA01	O	
45	VSS	-	VSS	109	CS0N/PG0	O	External memory chip select
46	VDD	-	VDD +2.5V	110	MA18	O	
47	IOVDD	-	IOVDD +3.3V	111	MA19	O	
48	PA0	I/O		112	MA21/PF1	O	External memory address bus
49	PA1	I/O		113	MA22/PF2	O	
50	PA2	I/O		114	MA20	O	
51	PA3	I/O	I/O port	115	MA23/PF3	O	External memory address bus
52	PA4	I/O		116	CS1N/PG1	O	External memory chip select
53	PA5	I/O		117	MA00/PF0	O	
54	PA6	I/O		118	VSS	-	VSS
55	PA7	I/O		119	VDD	-	VDD +2.5V
56	VSS	-	VSS	120	IOVDD	-	IOVDD +3.3V
57	PB0	I/O		121	CS2N/PE0	O	
58	PB1	I/O		122	CS3N/PE1	O	
59	PB2	I/O		123	CS4N/CASN/PE2	O	
60	PB3	I/O	I/O port	124	CS5N/PE3	O	External memory chip select
61	PB4	I/O		125	CS50RDN/PE4	O	
62	PB5	I/O		126	CS51WRN/PE5	O	
63	PB6	I/O		127	CS52WRN/PE6	O	
64	PB7/SYI	I/O		128	CS53WRN/RASN/PE7	O	

● ISP1161A1BD (X5879A00) USB CONTROLLER

DM: IC27

PIN NO.	NAME	I/O	FUNCTION	PIN NO.	NAME	I/O	FUNCTION
1	DGND	-	Digital ground	33	NDP_SEL	I	Indicates to the HC
2	D2	I/O	DATA bus	34	EOT	I	EOT input
3	D3	I/O		35	DGND	-	Digital ground
4	D4	I/O		36	D_SUSPEND	O	DC 'suspend' state output
5	D5	I/O		37	D_WAKEUP	I	DC wake-up input
6	D6	I/O		38	/GL	O	GoodLink LED output
7	D7	I/O		39	D_VBUS	I	DC USB input
8	DGND	-	Digital ground	40	H_WAKEUP	I	HC wake-up input
9	D8	I/O	DATA bus	41	CLKOUT	O	Programmable clock out
10	D9	I/O		42	H_SUSPEND	O	HC 'suspend' output
11	D10	I/O		43	XTAL1	I	Crystal input
12	D11	I/O		44	XTAL2	I	Crystal output
13	D12	I/O		45	DGND	-	Digital ground
14	D13	I/O		46	/H_PSW1	O	Power switching control
15	DGND	-	Digital ground	47	/H_PSW2	O	Power switching control
16	D14	I/O	DATA bus	48	D_DM	AI/O	USB D- data line for DC
17	D15	I/O		49	D_DP	AI/O	USB D+ data line for DC
18	DGND	-	Digital ground	50	H_DM1	AI/O	USB D- data line for HC
19	Vhold1	-	Voltage holding pin	51	H_DP1	AI/O	USB D+ data line for HC
20	NC	-	No connection	52	H_DM2	AI/O	USB D- data line for HC
21	/CS	I	Chip select	53	H_DP2	AI/O	USB D+ data line for HC
22	/RD	I	Read strobe	54	/H_OC1	I	Overcurrent sensing input
23	/WR	I	Write strobe	55	/H_OC2	I	Overcurrent sensing input
24	Vhold2	-	Voltage holding pin	56	Vcc	-	Power supply(3.3V)
25	DREQ1	O	HC DMA request	57	AGND	-	Analog ground
26	DREQ2	O	DC DMA request	58	Vreg	-	3.3V regulator output
27	/DACK1	I	HC DMA acknowledge	59	A0	I	Address bus
28	/DACk2	I	DC DMA acknowledge	60	A1	I	Address bus
29	INT1	O	HC interrupt output	61	NC	-	No connection
30	INT2	O	DC interrupt output	62	DGND	-	Digital ground
31	TEST	O	test output	63	D0	I/O	DATA bus
32	/RESET	I	Reset input	64	D1	I/O	

● μPD780031AYGK-NO6 (X2599200) E-TKS

GH3_EBUS H/GH3_EBUS L/GH3_EBUS M: IC001

PIN NO.	NAME	I/O	FUNCTION	PIN NO.	NAME	I/O	FUNCTION
1	P50/A8	I/O	Port 5 / Higher address bus	33	P10/ANI0	I	Port 1 / A/D converter analog input
2	P51/A9	I/O		34	AV_{REF}	I	A/D converter reference voltage input
3	P52/A10	I/O		35	AV_{DD}	-	Analog power supply
4	P53/A11	I/O		36	$\overline{RESET}$	I	System reset input
5	P54/A12	I/O		37	XT2	-	Subsystem clock oscillation
6	P55/A13	I/O		38	XT1	I	
7	P56/A14	I/O		39	IC	-	Internally connected
8	P57/A15	I/O		40	X2	-	Main system clock oscillation
9	Vss0	-	Ground	41	X1	I	
10	$V_{DD}0$	-	Power supply	42	Vss1	-	Ground
11	P30	I/O	Port 3	43	P00/INTP0	I/O	Port 0 / External interrupt request input
12	P31	I/O		44	P01/INTP1	I/O	
13	P32/SDA0	I/O	Port 3 / Serial data input/output	45	P02/INTP2	I/O	
14	P33/SCL0	I/O	Port 3 / Serial clock input/output	46	P03/INTP3/ADTRG	I/O	Port 0 / External interrupt request input / Trigger signai input
15	P34	I/O	Port 3	47	P70/TI00/TO0	I/O	Port 7 / External count clock input / 16-bit timer/event counter 0 output
16	P35	I/O		48	P71/TI01	I/O	Port 7 / Capture trigger input
17	P36	I/O		49	P72/TI50/TO50	I/O	Port 7 / External count clock input / 8-bit timer/event counter 50 output
18	P20/SI30	I/O	Port 2 / Serial data input	50	P73/TI51/TO51	I/O	Port 7 / External count clock input / 8-bit timer/event counter 51 output
19	P21/$\overline{SO30}$	I/O	Port 2 / Serial data output	51	P74/PCL	I/O	Port 7 / Clock output
20	P22/$\overline{SCK30}$	I/O	Port 2 / Serial clock input/output	52	P75/BUZ	I/O	Port 7 / Buzzer output
21	P23RxD0	I/O	Port 2 / Serial data input	53	P64/$\overline{RD}$	I/O	Port 6 / Strobe signal output for reading
22	P24/TxD0	I/O	Port 2 / Serial data output	54	P65/$\overline{WR}$	I/O	Port 6 / Strobe signal output for writing
23	P25/ASCK0	I/O	Port 2 / Serial clock input/output	55	P66/$\overline{WAIT}$	I/O	Port 6 / Wait insertion
24	$V_{DD}1$	-	Power supply	56	P67/ASTB	I/O	Port 6 / Strobe output
25	AVss	-	Ground	57	P40/AD0	I/O	Port 4 / Lower address/data bus
26	P17/ANI7	I	Port 1 / A/D converter analog input	58	P41/AD1	I/O	
27	P16/ANI6	I		59	P42/AD2	I/O	
28	P15/ANI5	I		60	P43/AD3	I/O	
29	P14/ANI4	I		61	P44/AD4	I/O	
30	P13/ANI3	I		62	P45/AD5	I/O	
31	P12/ANI2	I		63	P46/AD6	I/O	
32	P11/ANI1	I		64	A47/AD7	I/O	

■ IC BLOCK DIAGRAM

● **SN74AHC1G08DCKR** (X3833A00)
● **TC7S08F** (XP116A00)
Single 2-Input Positive-AND Gate
DM:IC002,IC023

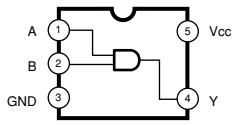

FUNCTION TABLE

INPUTS		OUTPUT
A	B	Y
H	H	H
L	X	L
X	L	L

● **SN74LV32APWR** (X5647A00)
Quad 2 Input OR
DM:IC018

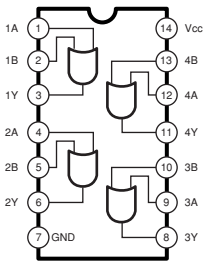

● **SN74LV126APWR** (X3865A00)
Quad 3-State Bus Buffer
DM: IC029

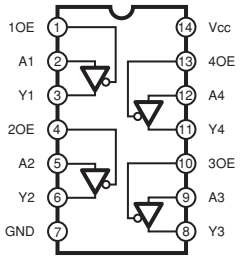

● **SN74AHCT245PWR** (X2709A00)
● **TC74VHC245AFT** (XT744B00)
Octal 3-State Bus Transceiver
DM:IC028

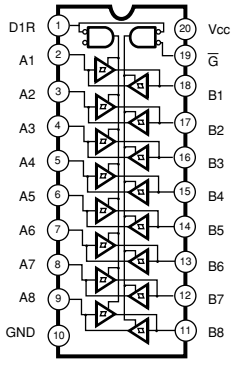

● **NJM2068MD-TE2** (X3505A00)
● **μPC4570G2-E1-A** (X7351A00)
Dual Operational Amplifier
DM:IC014
EQ:IC001
AJACK:IC001,IC002

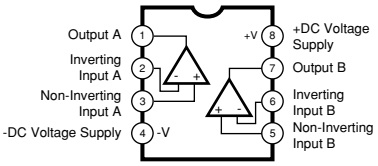

● **μPC4574G2** (X7391A00)
Quad Operational Amplifier
EQ:IC002,IC003,IC004,IC005

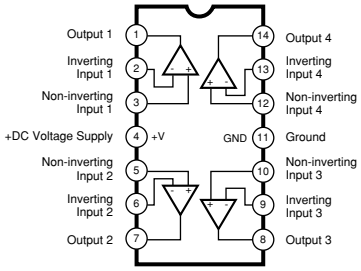

● **LA6517M-TE-R** (XT131A00)
Dual Power Operational Amplifier
AJACK: IC003

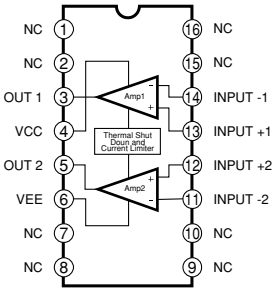

● **UMG5N**(WC668500)
Digital Transistor
DM: TA001,TA002,TA003,TA004

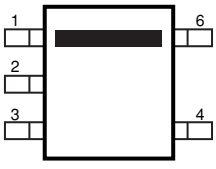

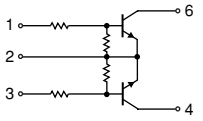

■ CIRCUIT BOARDS

CONTENTS

- DM Circuit Board (X5830E0) 22
- DJACK Circuit Board (X4470D0) 23
- GH3_EBUS L Circuit Board (X2177C0) 24
- GH3_EBUS M Circuit Board (X2178D0) 26
- GH3_EBUS H Circuit Board (X2179C0) 28
- PNL Circuit Board (X5955C0) 30
- PNR Circuit Board (X5956C0) 31
- AJACK Circuit Board (X6217B0) 32
- FU60 Circuit Board (XQ395B0) 33
- NET1 Circuit Board (XT123B0) 33
- MA80S Circuit Board (X4384E0) 34
- EQ Circuit Board (X4413A0) 36
- MV Circuit Board (X5956C0) 36
- PEDAL Circuit Board (XR780C0) 37
- PEDAL VR Circuit Board (XR780C0) 37
- PJK Circuit Board (X5143A0) 37
- PL Circuit Board (XR898A0) 37
- HP Circuit Board (XQ390A0) 37

Note: See parts list for details of circuit board component parts.

• DM Circuit Board

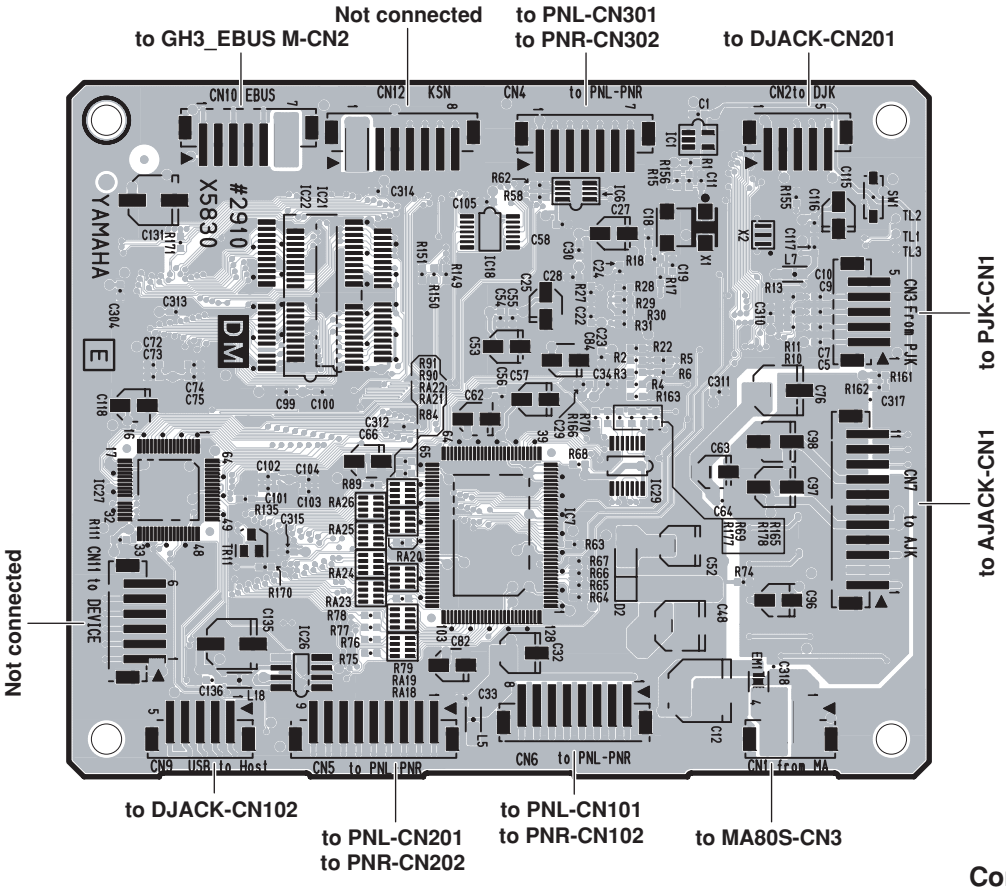

Component Side

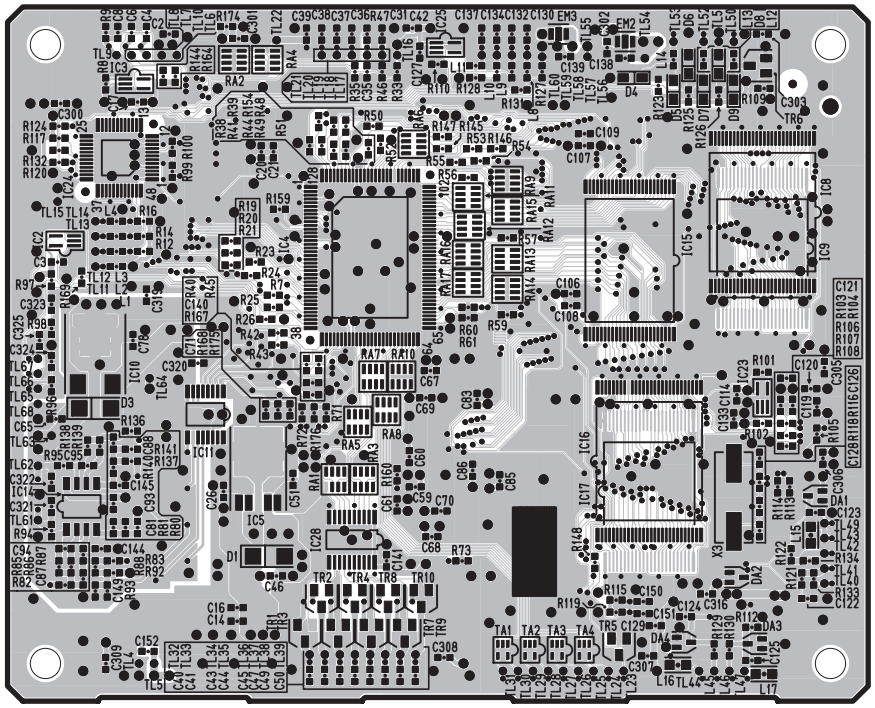

Pattern Side

2NA-WD97020 3

• DJACK Circuit Board

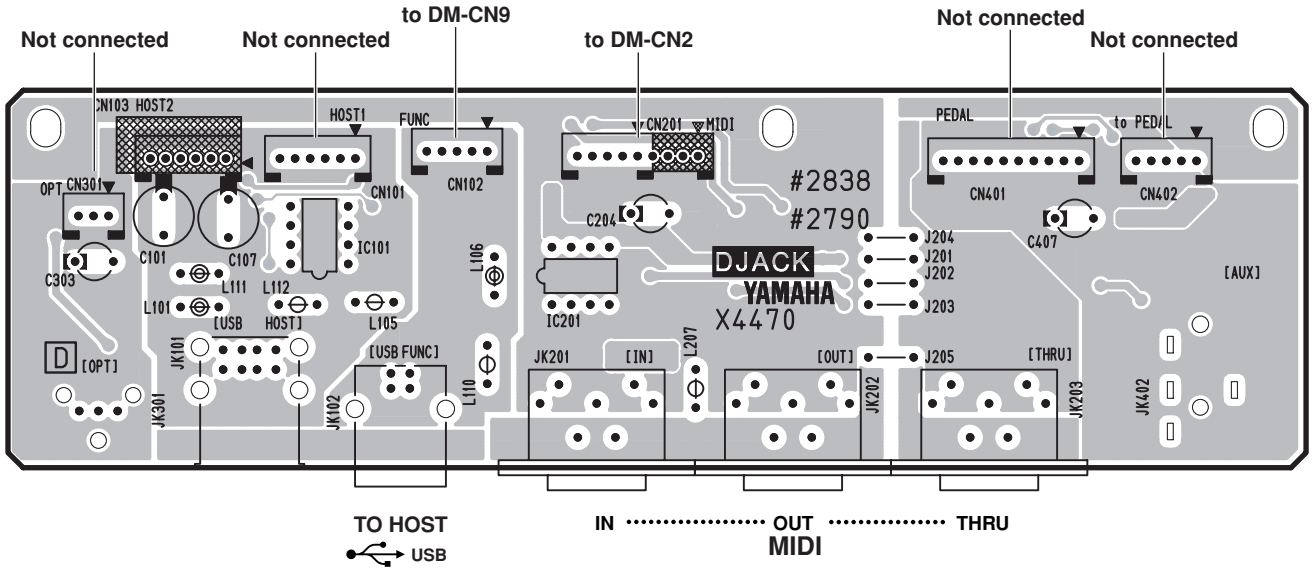

Component Side

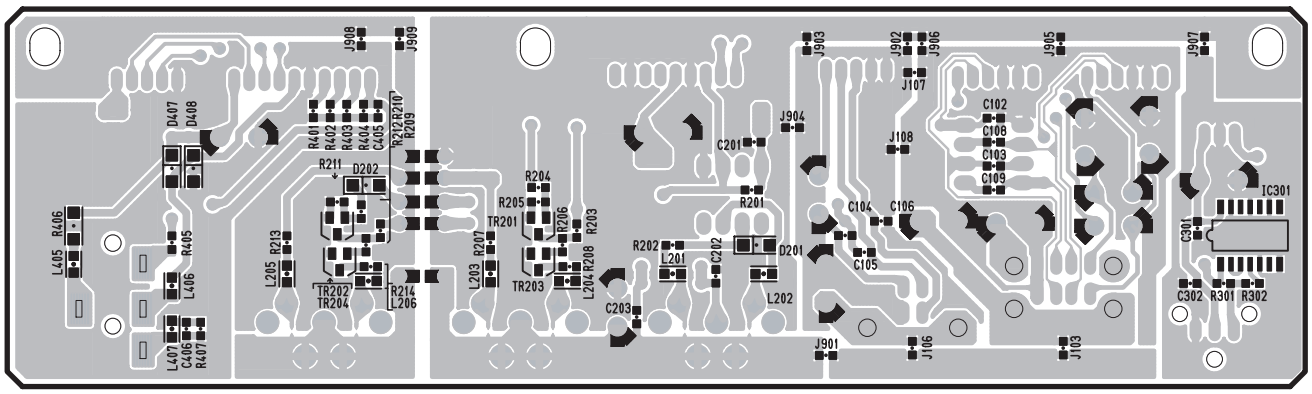

Pattern Side

2NA-WB55590 /5

• GH3_EBUS L Circuit Board

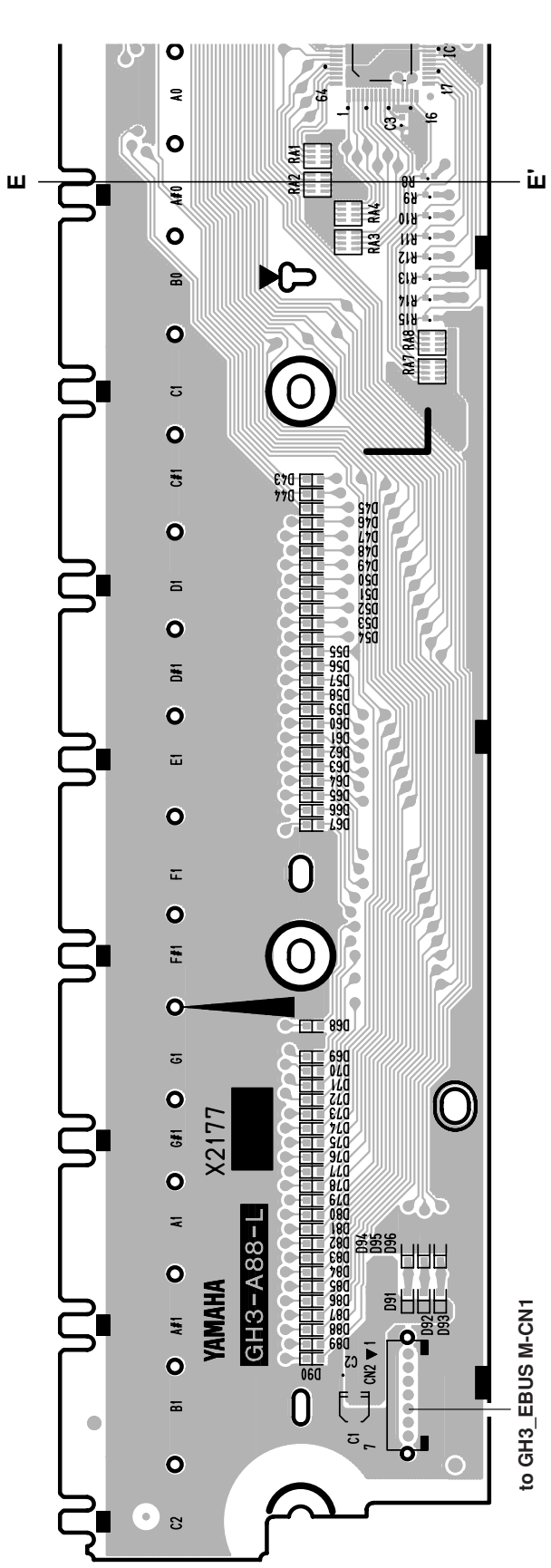

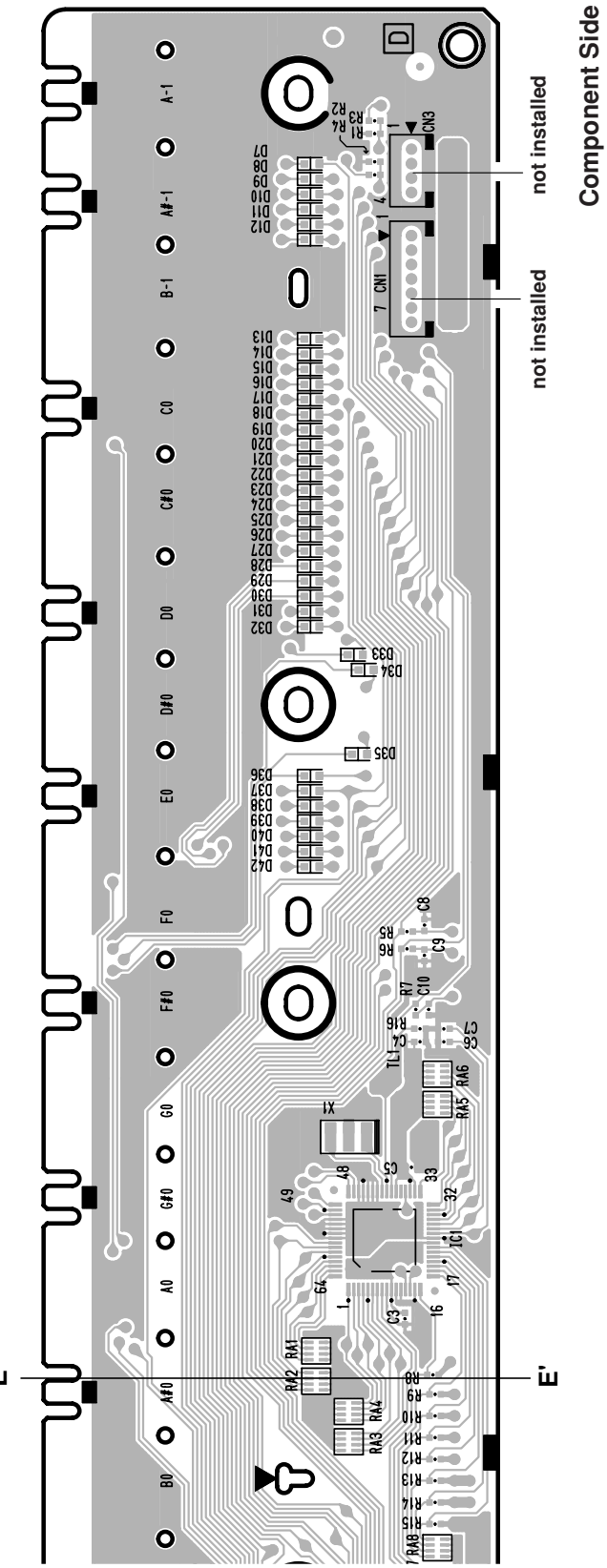

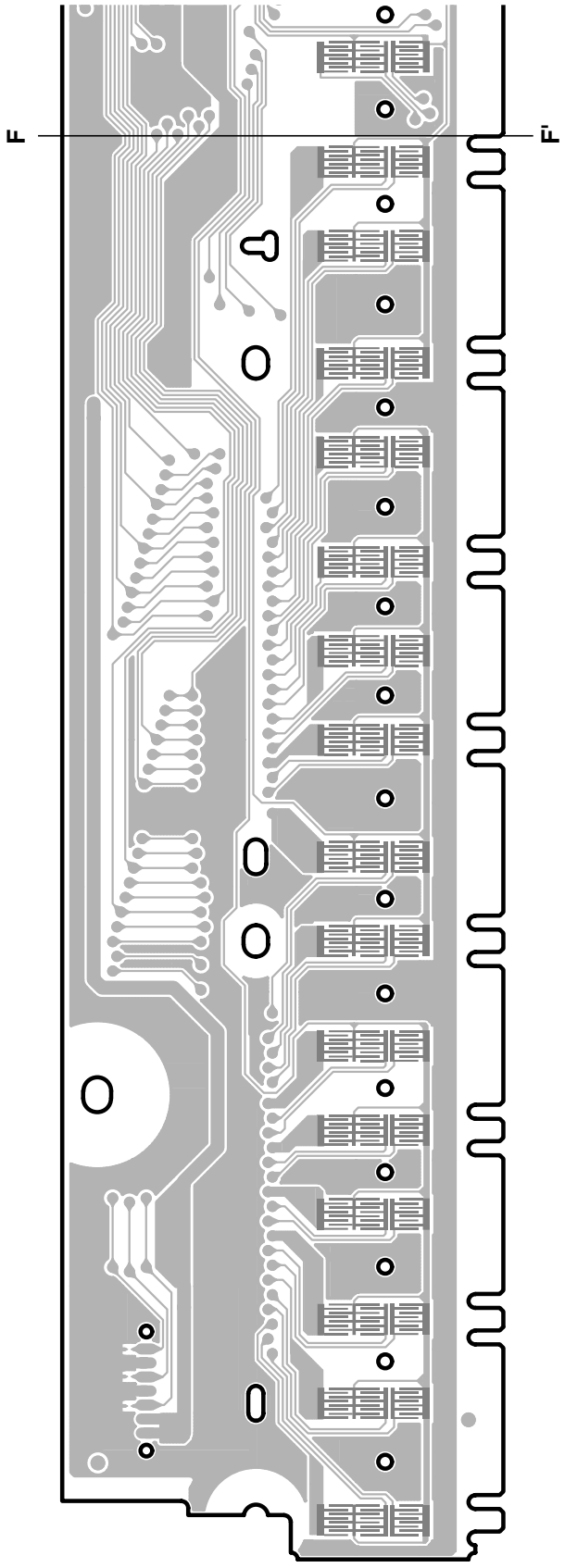

2NAK8-V890460 ⚠1

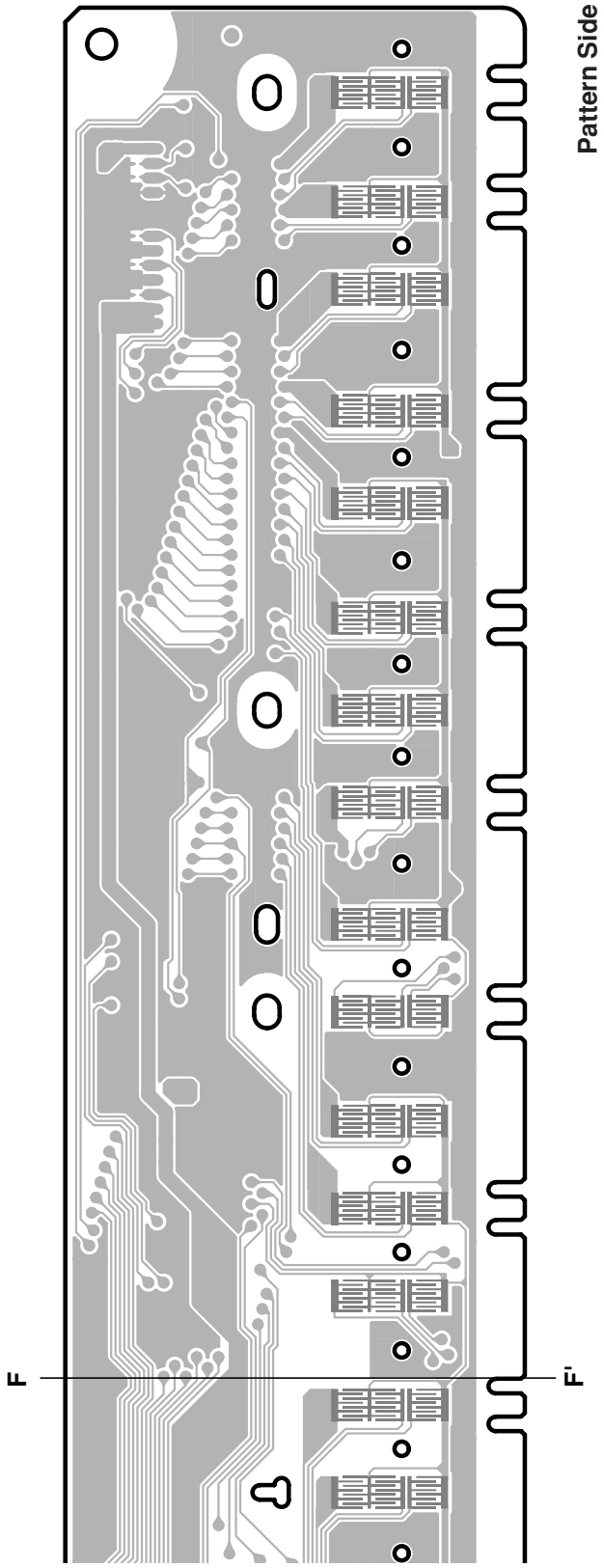

• GH3_EBUS M Circuit Board

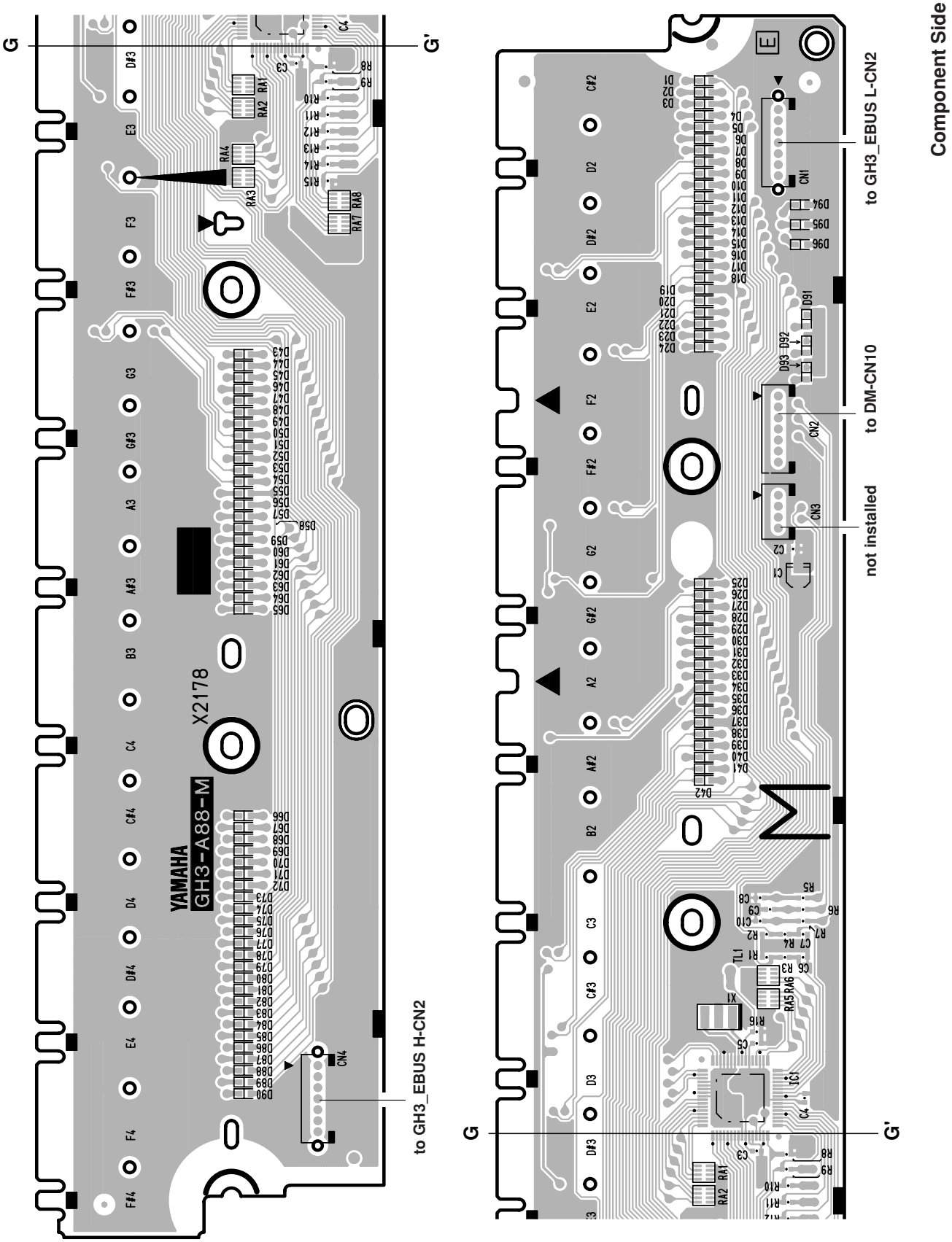

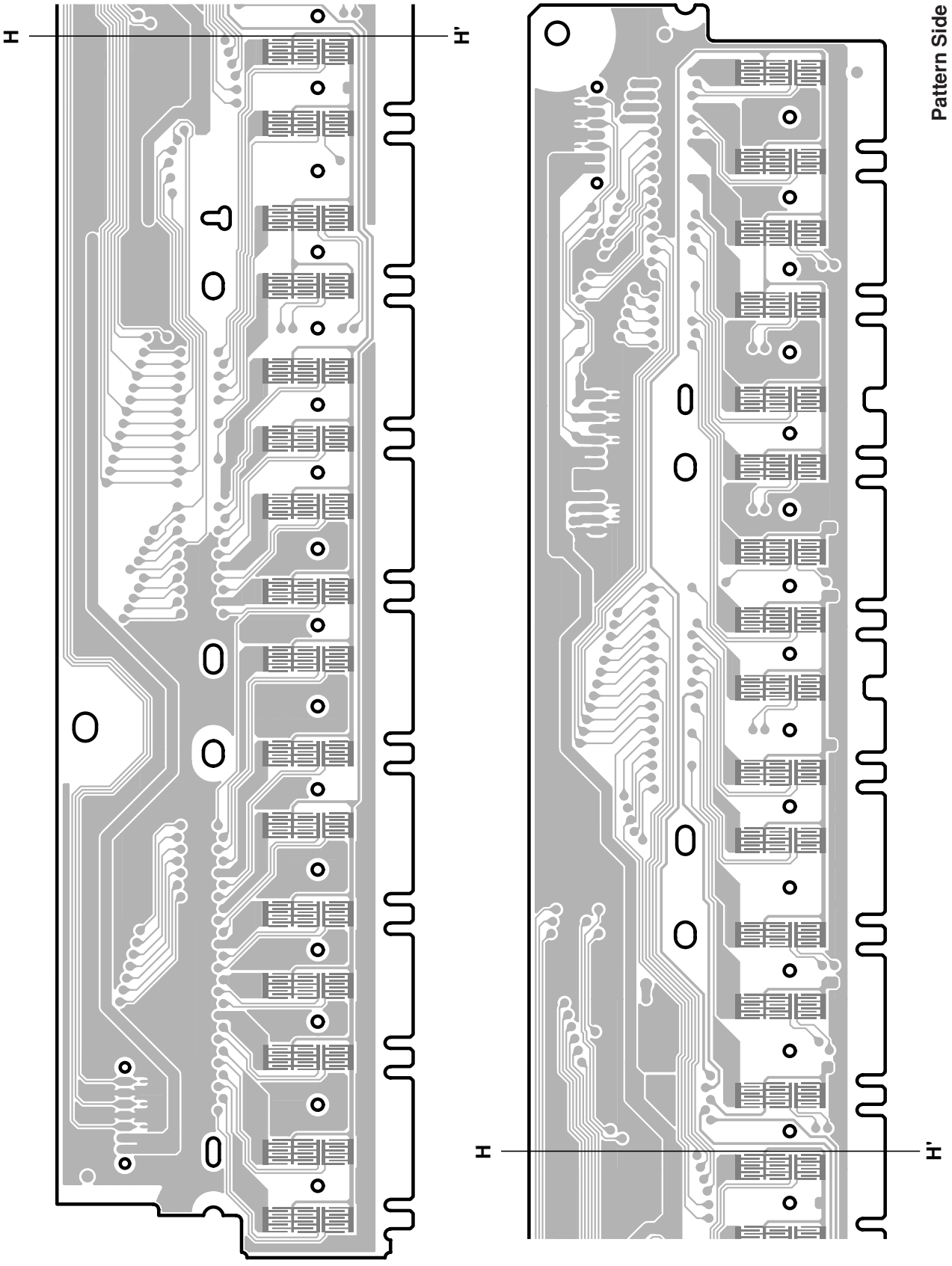

2NAK8-V890470 ⚠1

• GH3_EBUS H Circuit Board

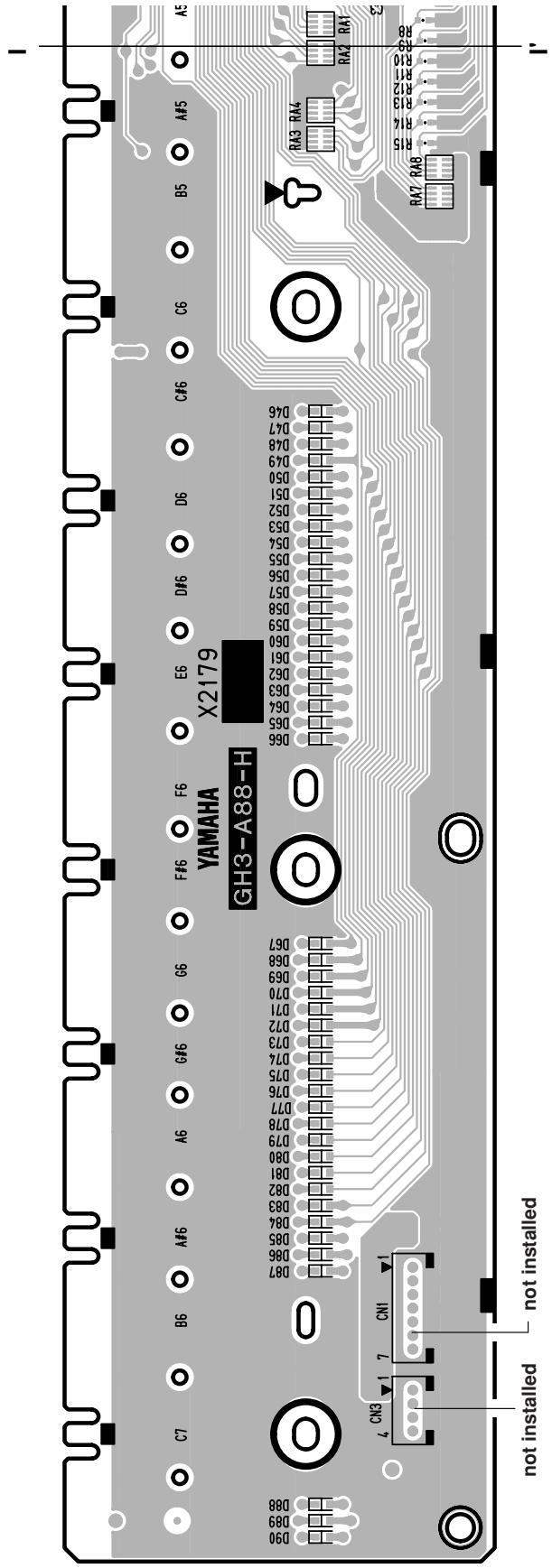

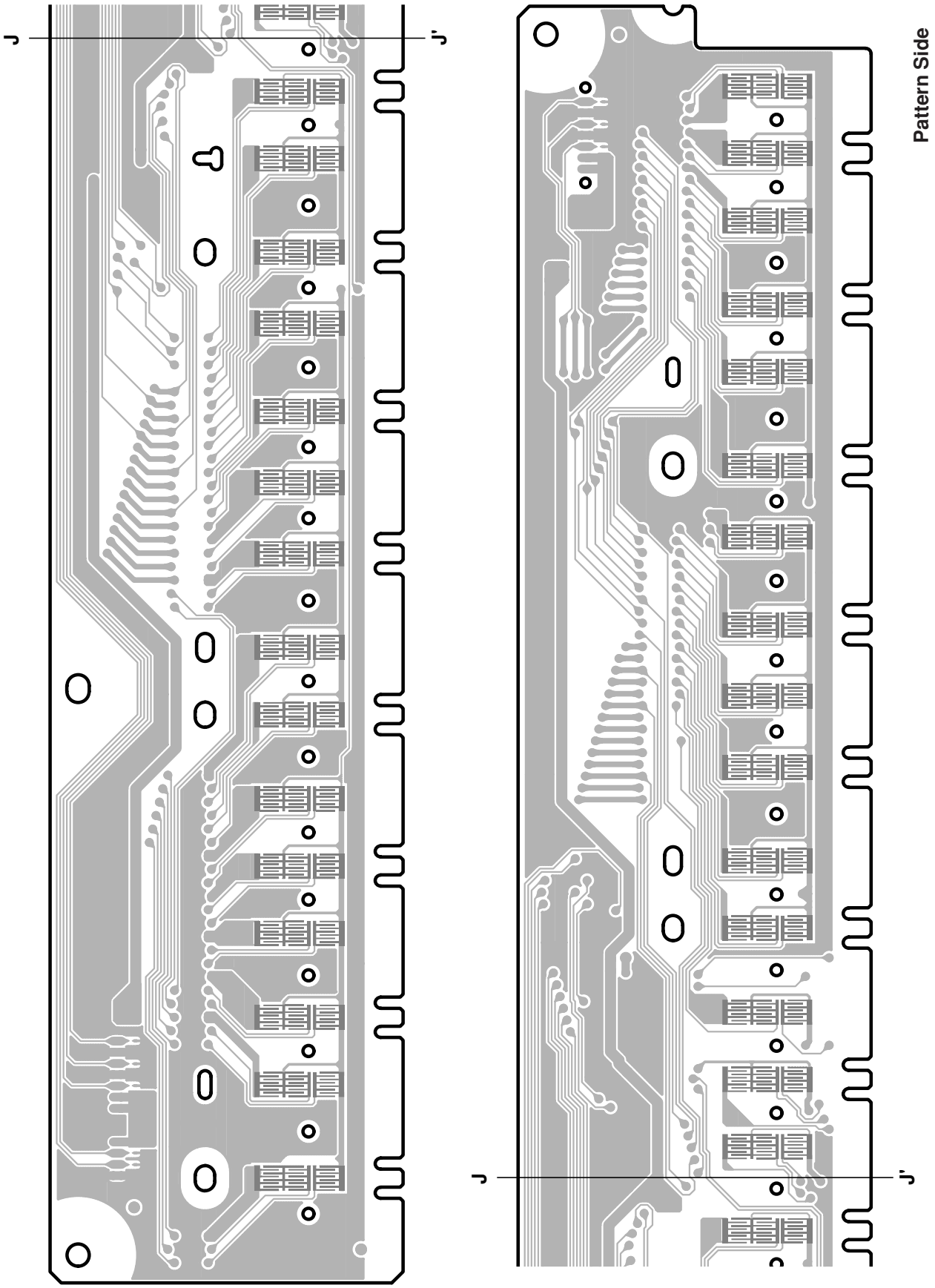

2NAK8-V890480 △1

• PNL Circuit Board

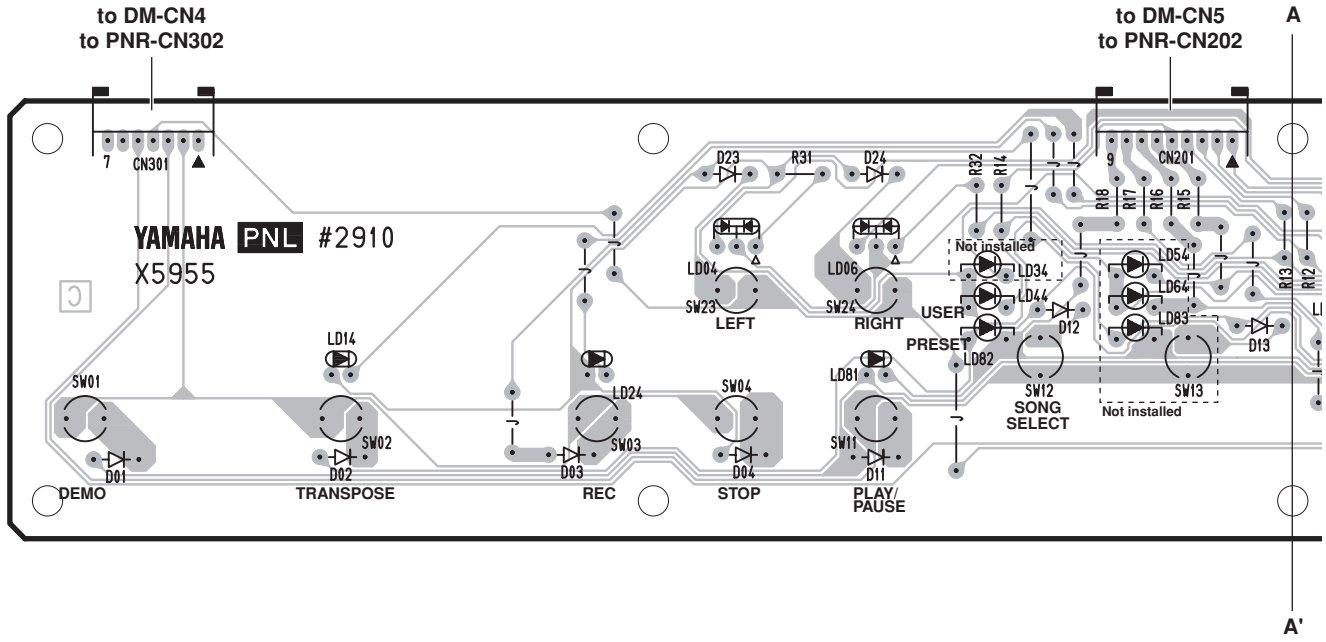

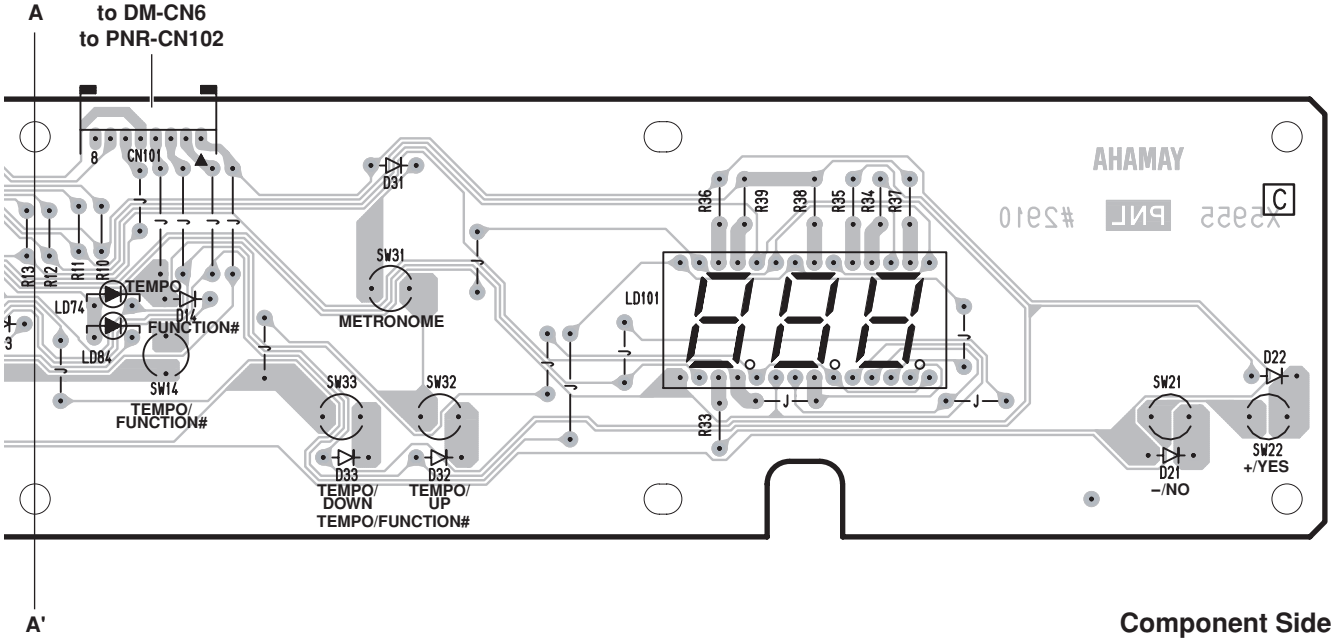

Component Side

2NA-WE02140

• PNR Circuit Board

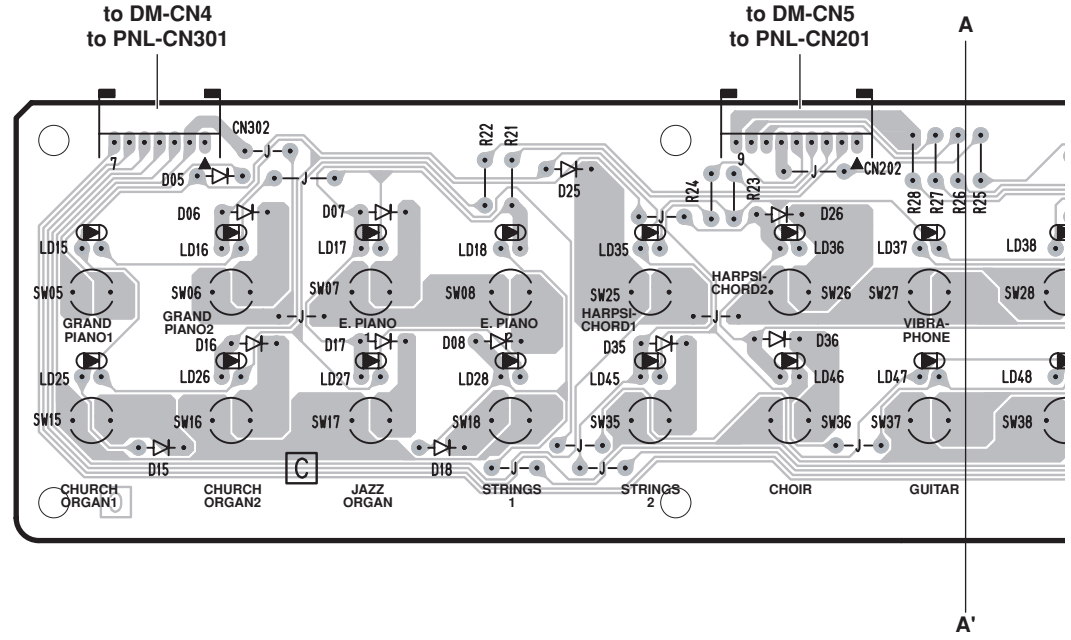

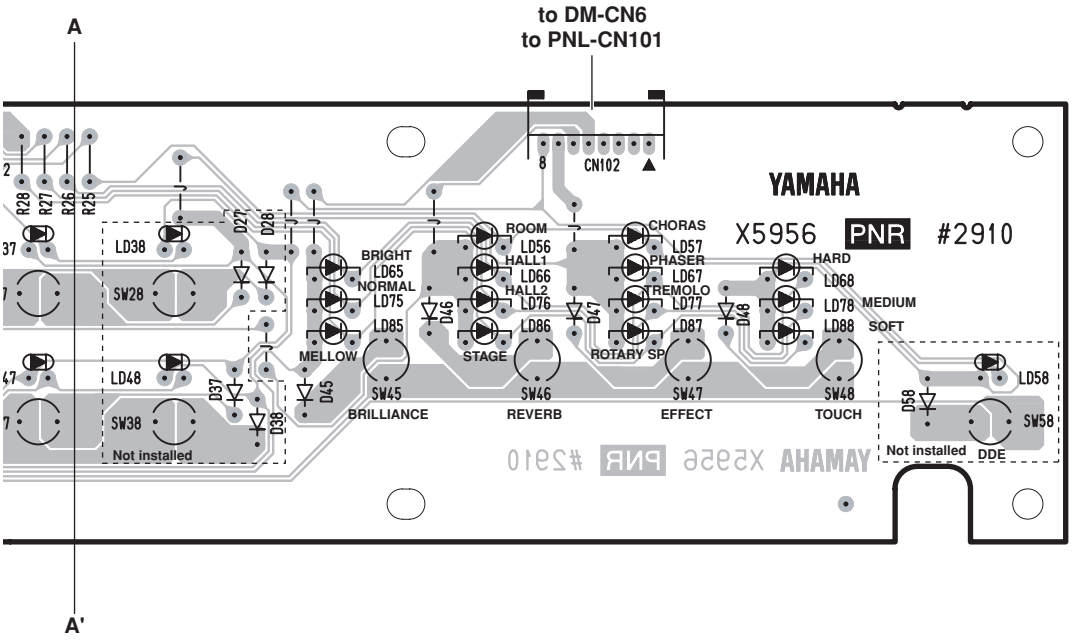

• AJACK Circuit Board

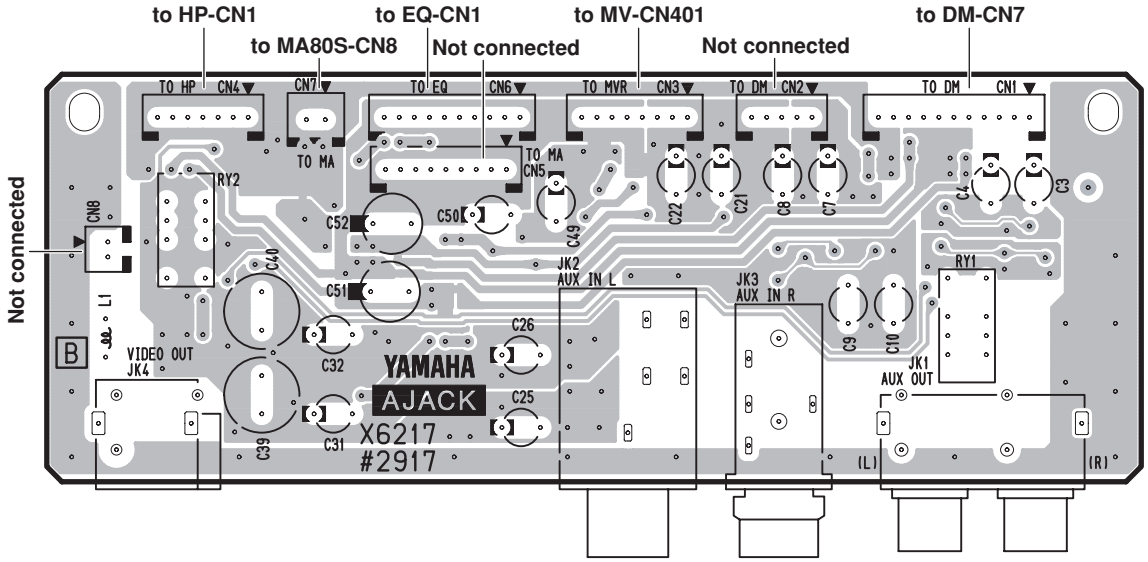

Component Side

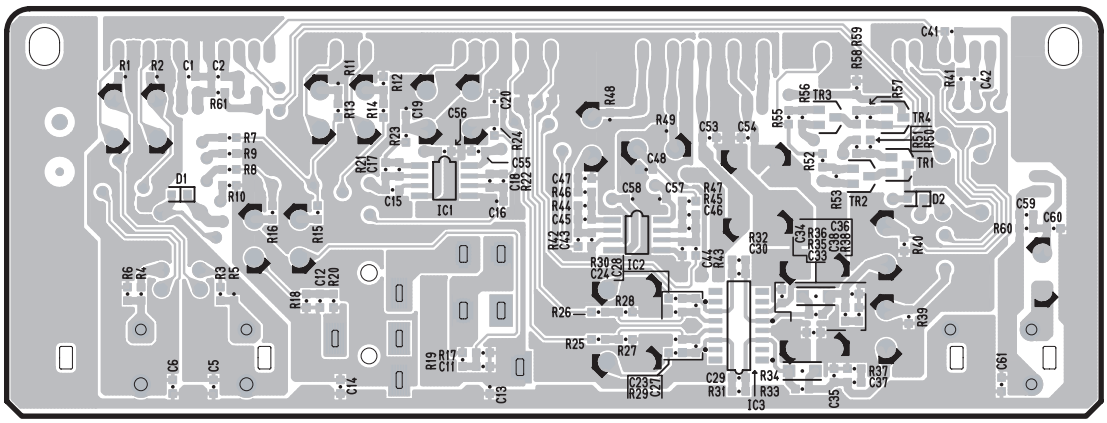

Pattern Side

• FU60 Circuit Board

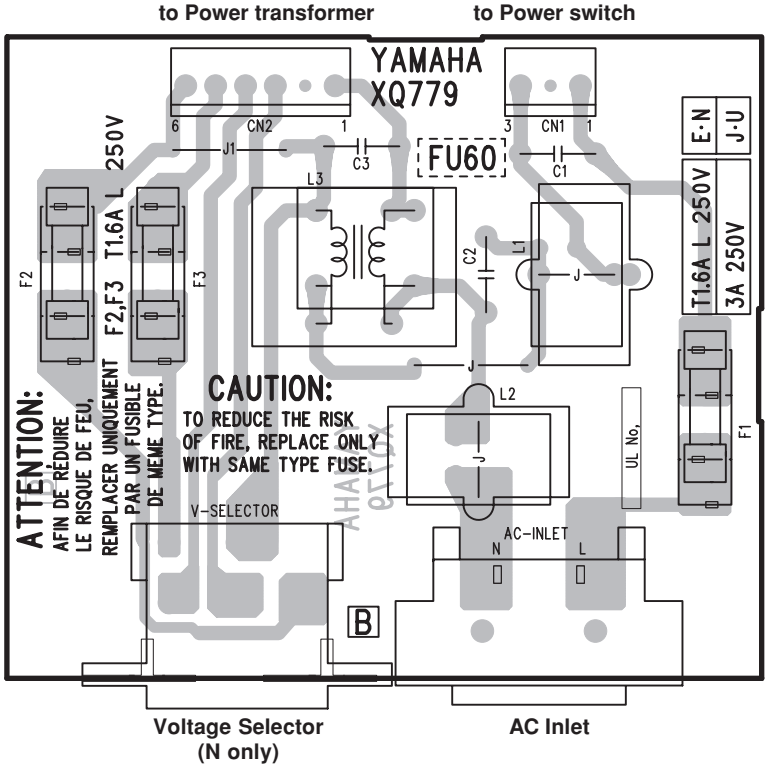

* XQ395B0 and XQ779B0 are equal circuit boards. It is distinguished by the destination.

Component Side

• NET1 Circuit Board

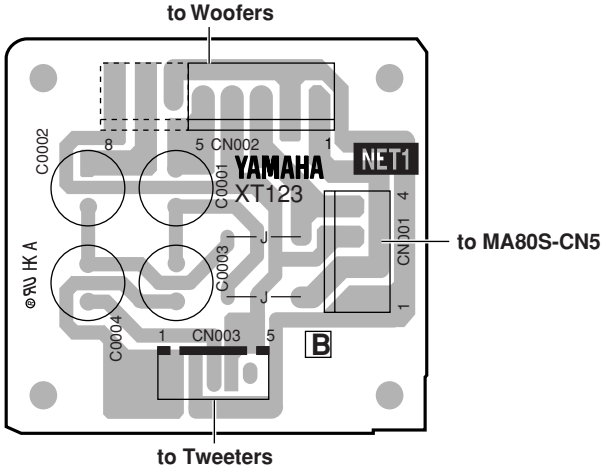

Component Side

FU60: 2NA-WB55420
NET1: 2NA-V770820

• MA80S Circuit Board

The float of IC7,8(DC/DC Converter) and inclination carry out to less than the following figure.

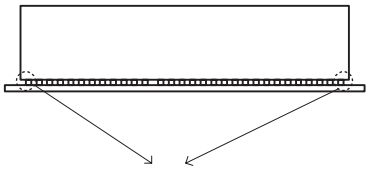

The float from a substrate is measured at the both ends of IC7,8, and it is less than 0.5mm both.

Attach the heat sink sheet on rear of IC6.

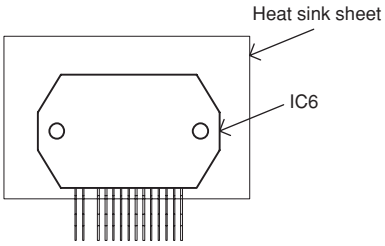

Spacer shall be insert securely.
The direction of Spacer isn't limited.

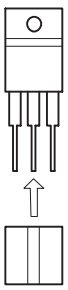

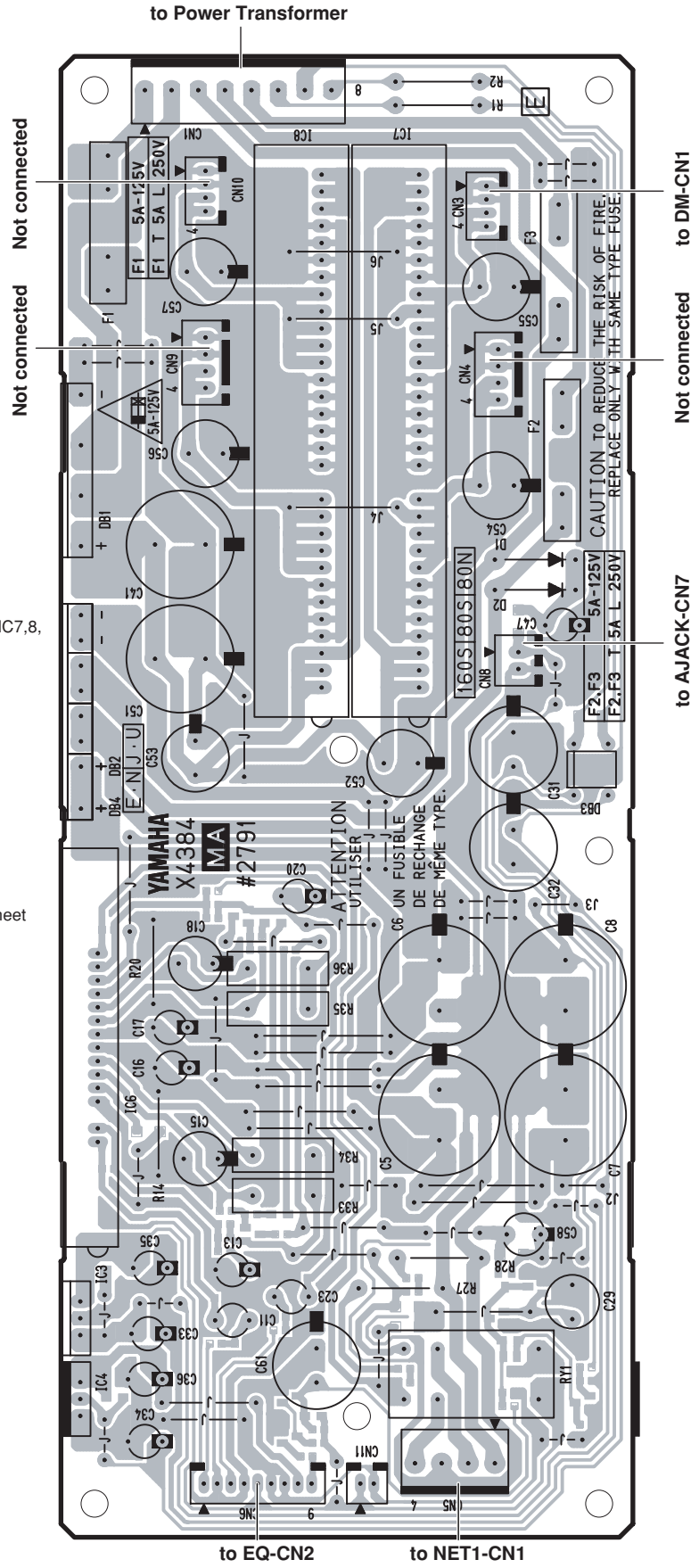

Component Side

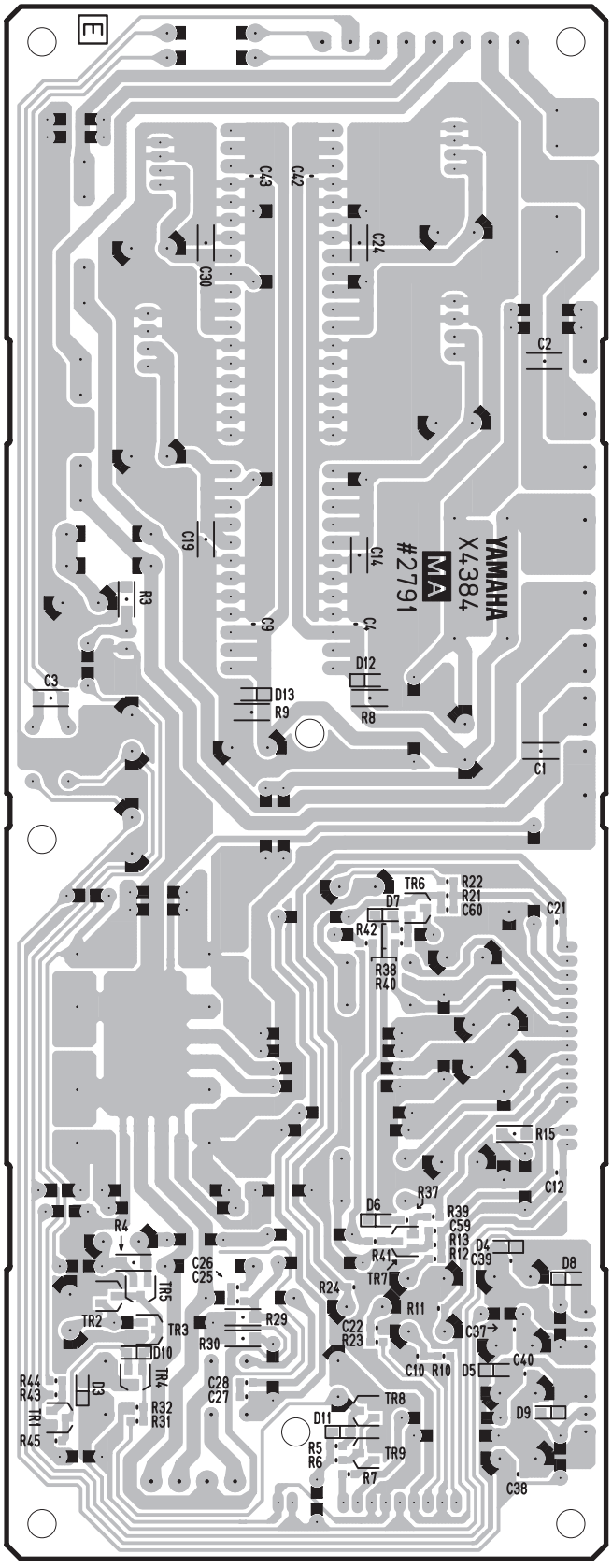

2NA-WB55420 3

Pattern Side

• EQ Circuit Board

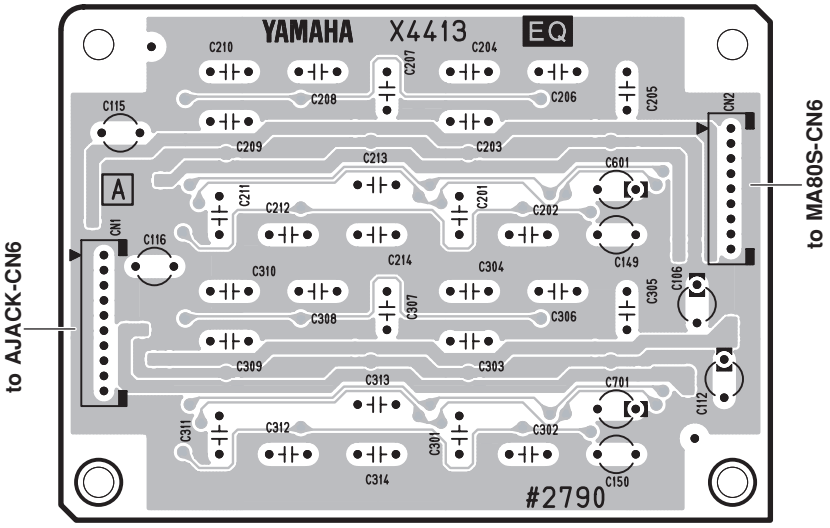

Component Side

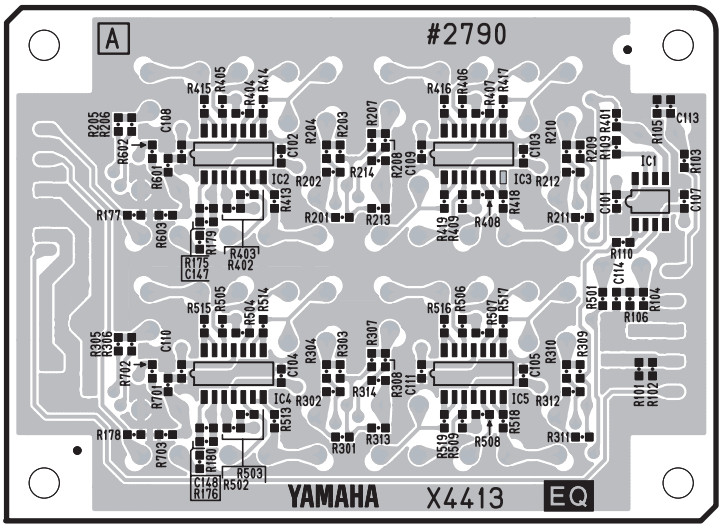

Pattern Side

• MV Circuit Board

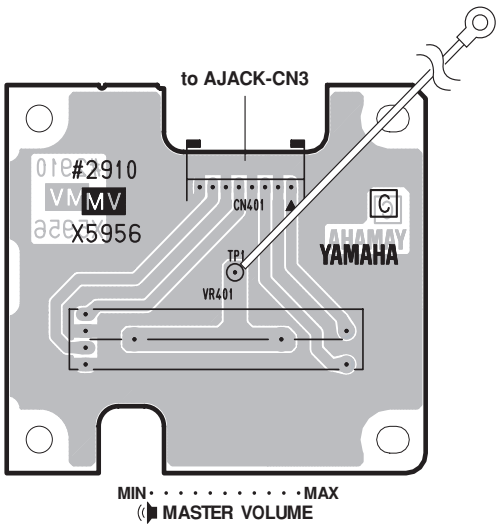

Component Side

EQ: 2NA-WB55450 6
MV: 2NA-WE02160

• PL Circuit Board

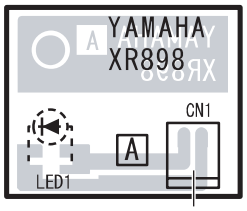

* XR898A0 and XL151B0 are equal circuit boards.
It is distinguished by the destination.

POWER indicator

to HP-CN2

Component Side

• HP Circuit Board

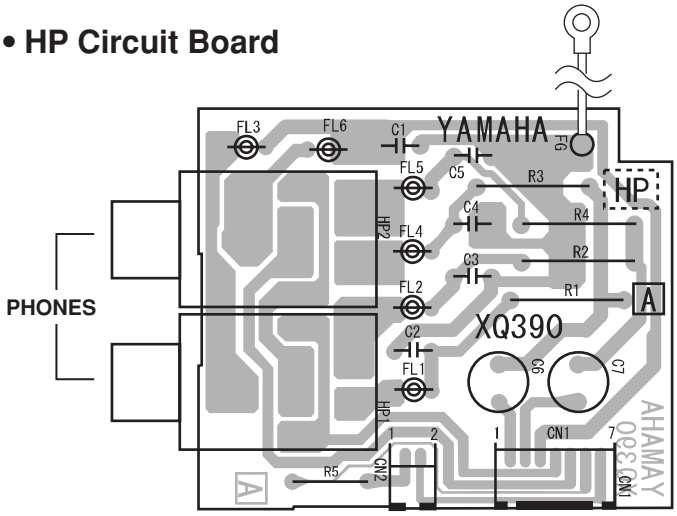

PHONES

to PL-CN1 to AJACK-CN4

* XQ390A0 and XQ389A0 are equal circuit boards.
It is distinguished by the destination.

Component Side

• PJK Circuit Board

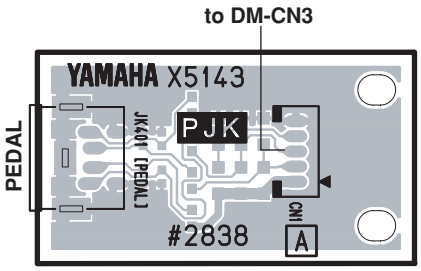

to DM-CN3

PEDAL

Component Side

● PEDAL Circuit Board

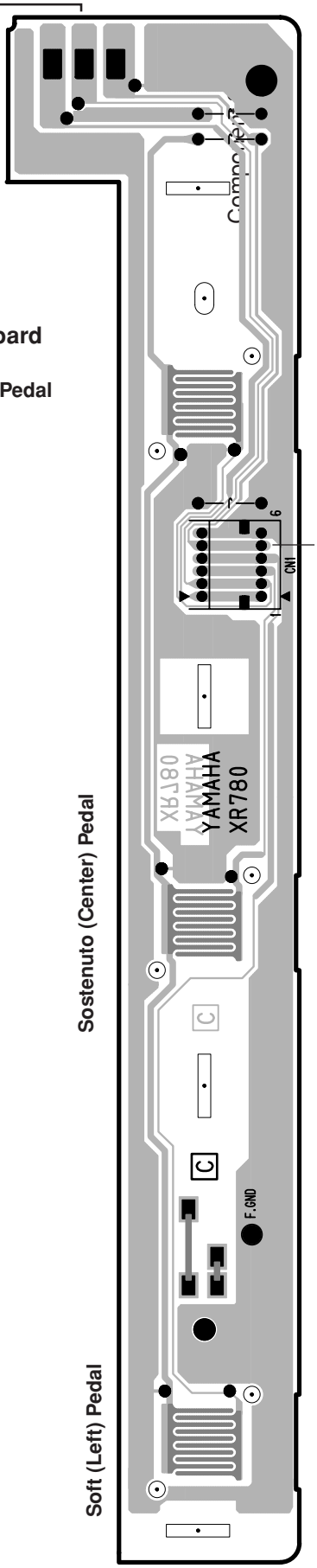

to PJK-JK1

Sostenuto (Center) Pedal

Soft (Left) Pedal

Component Side

● PEDAL VR Circuit Board

Damper (Right) Pedal

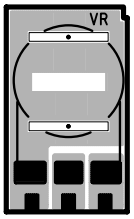

Component Side

PEDAL: 2NA-WB97030
PEDAL VR: 2NA-WB97030
PJK: 2NA-WC56110
HP: 2NA-V202110 /1\
PL: 2NA-VV65900

■ INSPECTIONS

1. Preparation

* To check the unit, the following mesuring instruments and jigs etc. are required.

1) Measuring Instruments: Level meter (JIS-C filter), Frequency counter
2) Jigs: USB cable (A-B Type), MIDI cable
3) PC(Personal Computer): DOS/V type

NOTE: In advance, install a MIDI-USB driver in the PC. Set to the Thru On position on the PC side.



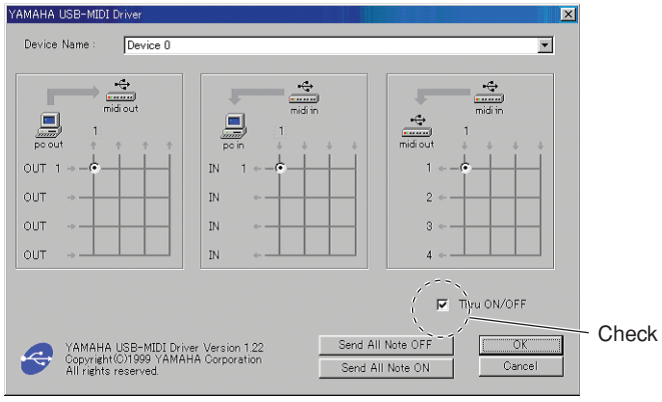

* Download the MIDI-USB driver from the Yamaha official website.
(URL >> http://www.yamahapkclub.com)

* Set each control as follows.

MASTER VOLUME	: MAX
PEDAL	: OFF
REVERB	: OFF
* Other settings	: the default state at power on
AUX OUT	: Connect a load resistance(10kohm) to AUX OUT terminal.
HEADPHONE	: Connect a load resistance (33ohm) to either terminal.

* **If necessary, back up the user data in advance. (See Page 43)**

2. Entering the Test Program

Turn on the power with C#2, F2, G#2 keys pressed and held. (Fig.1)
The test program will run and the 7segment LED will indicate '[TST]'. (Fig.2)

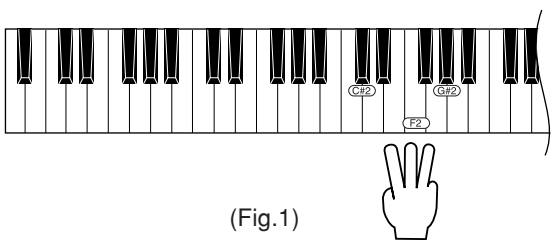

(Fig.1)



(Fig.2)

3. Proceeding the Test

See the Table 1 for the test items.
(1) Press TEMPO/FUNCTION# [▲] or [▼] button to select a test item.
(2) Press [METRONOME ON/OFF] button to execute the current test.
(3) After executing the current test, press [METRONOME ON/OFF] button to return to the wait state.
(4) If the test result is NG, press [DEMO] button to return to the wait state.

Test Item List

No.	7 segment. LED	Test Function and Judgement criteria
1	C01: Version 'Axx' 'b x.x'	Checks ROM version. Make sure that the 7 seg. LED alternately indicates 'A x.x'(the version of master ROM) and 'b x.x'(the version of slave ROM). Display for NG: 'AnG','bnG'
2	C02: Master ROM Check 1 PAS	Master ROM Check If the result is OK, the 7segment LED indicates 'PAS'. Display for NG: 'nG'
3	C03: Slave ROM Check 1 PAS	Slave ROM Check If the result is OK, the 7segment LED indicates 'PAS'. Display for NG: 'nG'
4	C04: RAM Check1 PAS	RAM Check If the result is OK, the 7segment LED indicates 'PAS'. Display for NG: 'nG'
5	C05: Flash ROM Check 1 -05 ->PAS	Flash ROM Check 1 While testing, '-05' appears. If the result is OK, the 7segment LED indicates 'PAS'. It takes about 5 seconds. Display for NG: 'nG'
9	C09: TG1 Check CG1	Tone Generator 1 Check The sine waves automatically sounds in sequence.
10	C 10: TG2 Check CG2	Tone Generator 2 Check The sine waves automatically sounds in sequence.
11	C 11: Pitch Check PIt	Pitch Check Confirm that the sine wave of 440.0 ± 0.2 Hz is output.
12	C 12: OUTPUT R OPr	OUTPUT R Check (1kHz) Confirm that the output level of each terminal is as follows. FIXED AUX OUT/L -57.0dBu FIXED AUX OUT/R -2.0dBu PHONES L -40.0dBu PHONES R +0.0dBu
13	C 13: OUTPUT L OPL	OUTPUT L Check (1kHz) Confirm that the output level of each terminal is as follows. FIXED AUX OUT/L -2.0dBu FIXED AUX OUT/R -57.0dBu PHONES L +0.0dBu PHONES R -40.0dBu
14	C 14: EQ Low EQL	EQ Low Check (*1)
15	C 15: EQ Mid EQM	EQ Mid Check (*1)
16	C 16: EQ High EQH	EQ High Check (*1)
17	C 17: SW, LED Check PAS	Switch, LED Check Making reference to the Table 2 (see page 42), press the switch corresponding to the number indicated on the 7segment LED. If the correct switch is pressed, the sine wave sounds on the pitch shown in the Table 2 and the 7segment LED indicates the next number. In addition, the LED lights up as for the LED-attached switch. If the wrong switch is pressed, the 7segment LED indicates 'nG'. 'Ou2' : Display when two or more SW(s) are pushed. After the last switch is checked, the 7segment LED indicates 'PAS'.

No.	7 segment. LED	Test Function and Judgement criteria
18	r 18: All LED ON 8.8.8.	All LED ON Check Confirm that all LEDs on the panel light up.
19	r 19: All Red LED ON 8.8.8.	All Red LED ON Check Confirm that all red LEDs on the panel light up.
20	r20: All Green LED ON 8.8.8.	All Green LED ON Check Confirm that all green LEDs on the panel light up. (LEFT,RIGHT)
26	r26: Soft Pedal Check PE 1 Str PAS	Soft Pedal Check When the soft pedal is depressed, the sine wave of C3 sounds and the 7segment LED indicates 'Str'. When the pedal is released, the sine wave of C4 sounds and the 7segment LED indicates 'PAS'.
27	r27: Sostenuto Pedal Check PE2 Str PAS	Sostenuto Pedal Check When the sostenuto pedal is depressed, the sine wave of C3 sounds and the 7segment LED indicates 'Str'. When the pedal is released, the sine wave of C4 sounds and the 7segment LED indicates 'PAS'.
28	r28: Damper Pedal Check PE3 Str PAS	Damper Pedal Check When the damper pedal is depressed, the sine wave of C3 sounds and the 7segment LED indicates 'Str'. When the pedal is released, the sine wave of C4 sounds and the 7segment LED indicates 'PAS'.
31	r31: MIDI Check PAS	MIDI Check Connect MIDI IN and MIDI OUT terminals by a MIDI cable and execute the test. Confirm that the 7segment LED indicates 'PAS'. Display for NG: 'nG'
33	r33: USB To Host Check PAS	USB TO HOST Check Connect TO HOST terminal to USB terminal of the PC. (In advance, install a MIDI-USB driver in the PC. Also, set to the Thru On position on the PC side. (See page 38.) Execute the test and confirm that the 7segment LED indicates 'PAS'.
35	r35: Keyboard Type Check	Keyboard Type Check Ececute the test. When the keyboard type is correct, the 7segment LED indicates 'PAS'.
36	r36: Make Position Check	Make Position Check (*2)
38	r38: 2-3 Make Check	2-3 Make Check (*3)
41	r41: ROM Check2	Test for factory inspection
42	r42: RAM Check2	Test for factory inspection
43	r43: Wave ROM Check2	Test for factory inspection
45	r45: Flash ROM Check2	Test for factory inspection
47	r47: Factory Set FAC	Factory Set It sets all to the factory default settings. It takes about 7 seconds. Execute the next item 48 surely.
48	r48: Test Exit	Exit the test program and return to the play mode. **Never turn off the power while indicating 'dCL'.** It returns to the play mode after the indicate of '120'.

Note: 0dBu = 0.775V

***1: EQ Check (EQ Low, EQ Mid, EQ High) Lch/Rch**

If necessary, execute these tests.

Terminal to be measured : EQ CN2 (Pin No.1: Lch, Pin No.3: Rch, Pin No.2,4,6 or 7: GND)

Confirm that the output level at each terminal is as follows.

EQ Low : -13.5dBu (Lch/Rch)

EQ Mid : -12.5dBu (Lch/Rch)

EQ High : -12.0dBu (Lch/Rch)

***2: Make Position Check**

If necessary (for example, when replacing a white/black key with new one), execute this test.

Ececute the test and press each white/black key slowly.

When a white/black key is pressed slowly, confirm that the tone interval changes at the three stages, and the 7 segment LED display changes from '36' to 'PAS'.

***3: 2-3 Make Check**

If necessary (for example, when replacing a white/black key with new one), execute this test.

Ececute the test and press each white/black key.

Confirm that the sound is output by the volume according to the pressed strength and the 7segment LED indicates the value of velocity (1-127). Also, confirm that the 7 segment LED display changes from '38' to 'PAS'.

4. OTHERS

AUX IN Check

1. Input a sine wave (1kHz, 0 dBu) into the AUX IN L/L+R terminal .
   Do not input any signal into the AUX OUT R terminal.
   Confirm that the output level at each terminal is as follows.
   PHONES/L : +0.0dBu
   PHONES/R : -40.0dBu
2. Also, confirm that the output level at each terminal is reversed when L and Rch are reversed-inputted.

NOISE Check

PHONES L,R : less than -90dB

5. A setup of language

Turn on the power with a specific key pressed and held to set it up.

* International : except Destination J

keys [A-1] [A#-1] + Power ON (It is displayed as "En")

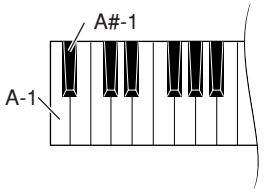

6. FACTORY SET

Set each controller to the factory default settings as follows.

Master Volume : Min

VOLTAGE SELECTOR : 240V (for destination N)

• **Table 2**

SW No.	SWITCH	NOTE	LED
S01	DEMO	C2	
S02	TRANSPOSE	C#2	◯ RED
S03	REC	D2	◯ RED
S04	LEFT	D#2	◯ YELLOW(RED+GREEN)
S05	RIGHT	E2	◯ YELLOW(RED+GREEN)
S06	STOP	F2	
S07	PLAY/PAUSE	F#2	◯ RED
S08	SONG SELECT	G2	◯ RED(USER/PRESET)
S09	TEMPO/FUNCTION#	G#2	◯ RED(TEMPO/FUNCTION#)
S10	METRONOME	A2	
S11	TEMPO/FUNCTION# ▼	A#2	
S12	TEMPO/FUNCTION# ▲	B2	
S13	-/NO	C3	
S14	+/YES	C#3	
S15	GRAND PIANO 1	D3	◯ RED
S16	GRAND PIANO 2	D#3	◯ RED
S17	E.PIANO 1	E3	◯ RED
S18	E.PIANO 2	F3	◯ RED
S19	HARPSICHORD 1	F#3	◯ RED
S20	HARPSICHORD 2	G3	◯ RED
S21	VIBRAPHONE	G#3	◯ RED
S22	CHURCH ORGAN 1	A3	◯ RED
S23	CHURCH ORGAN 2	A#3	◯ RED
S24	JAZZ ORGAN	B3	◯ RED
S25	STRINGS 1	C4	◯ RED
S26	STRINGS 2	C#4	◯ RED
S27	CHOIR	D4	◯ RED
S28	GUITAR	D#4	◯ RED
S29	BRILLIANCE	E4	◯ RED(BRIGHT/NORMAL/MELLOW)
S30	REVERB	F4	◯ RED(ROOM/HALL1/HALL2/STAGE)
S31	EFFECT	F#4	◯ RED(CHORUS/PHASER/TREMOLO/ROTARY SP)
S32	TOUCH	G4	◯ RED(HARD/MEDIUM/SOFT)

■ DATA BACKUP

PREPARATION

PC (Personal Computer)
USB Cable (A-B Type)
MIDI-USB Driver *1
Musicsoft Downloader (MSD) *1

*1: Obtain these programs from CD-ROM(X6010A00) of the attachment for CLP-265GP or Yamaha official website.
(URL>> http://www.yamahapkclub.com)
Install these software in PC beforehand.

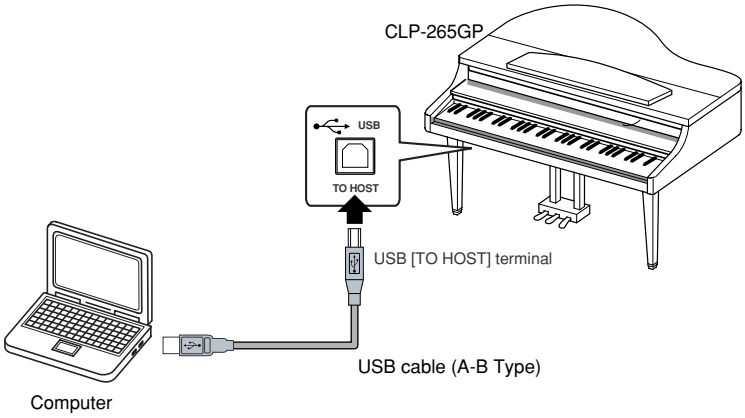

BACKUP PROCEDURE

1. Turn off the power of CLP-265GP.
2. End all the application software.
3. Connect the CLP-265GP to the PC with the USB cable.
4. Turn on the power of CLP-265GP.
5. Click the Control Panel on PC.

Set it clicking 

as shown in the figure below.

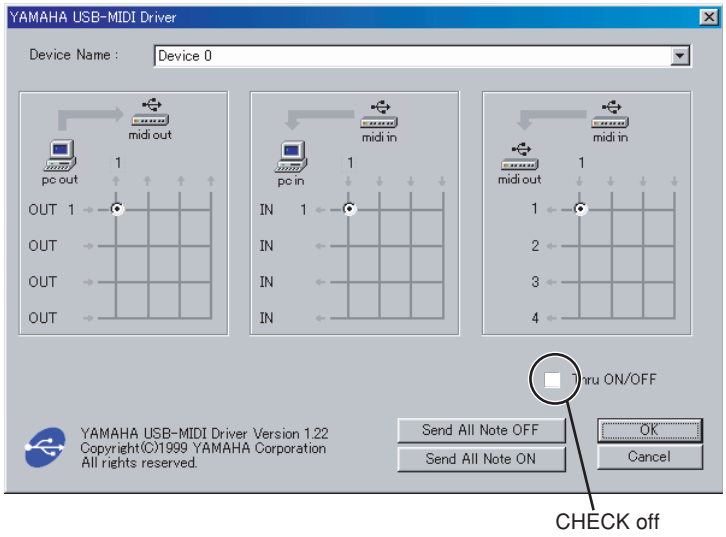

Start up Musicsoft Downloader.

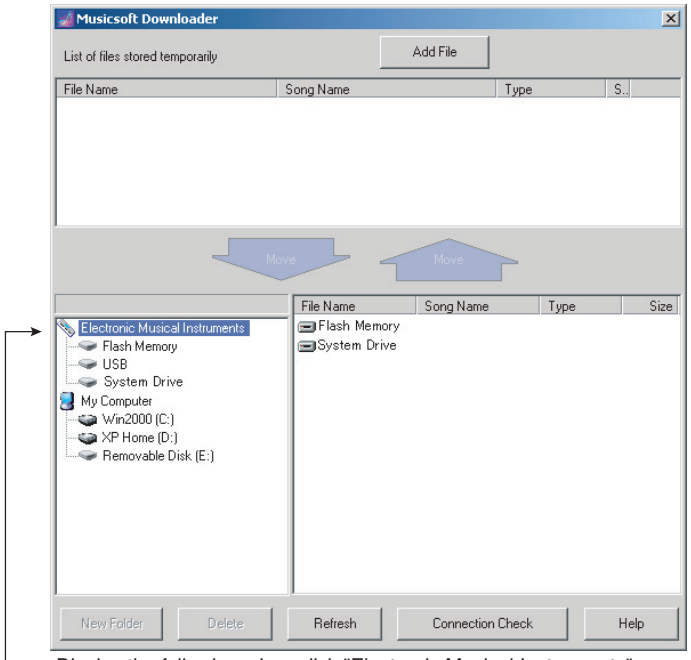

Display the following when click "Electronic Musical Instruments"

Flash Memory (The music data is stored)

System Drive (The panel setting and recorded user songs are stored)

* Refer to Page 46 <TROUBLE SHOOTING> when the following display appears.

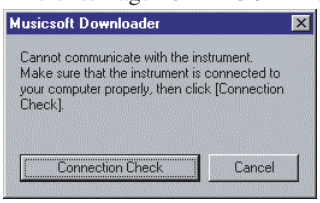

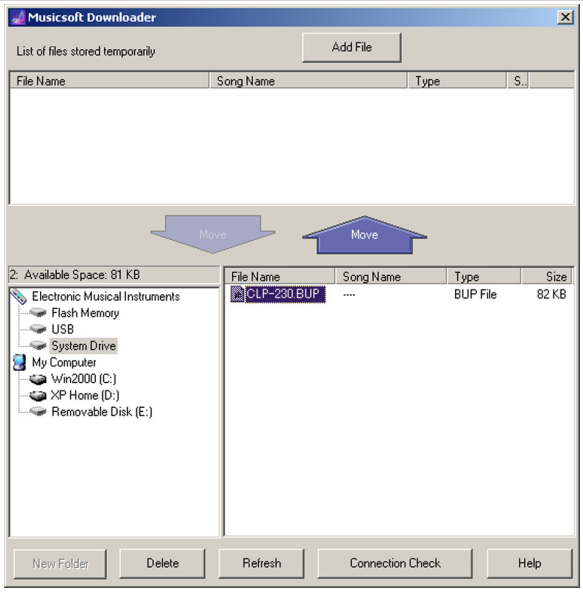

When System Drive is clicked, data file "CLP230.BUP" is displayed.

If "CLP230.BUP" is clicked, Move becomes active. When you click the Move, the screen in the figure below is displayed, and then click OK.

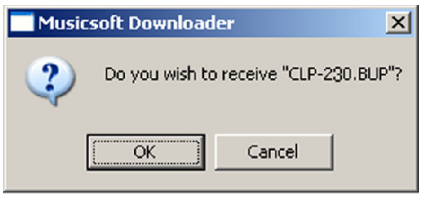

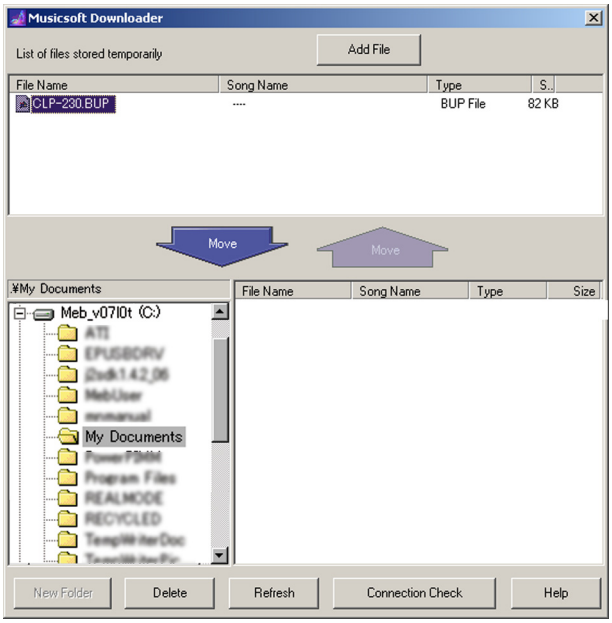

Specify the place where the backup data is preserved. (Preserve it in "My document" for example.)

If "CLP230.BUP" is clicked, Move becomes active. If Move is clicked, data is preserved in a specified folder.

When the data of Flash Memory is backed up, it is possible to do according to the same procedure.

Moreover, it is possible to do similarly when it returns it based on the backup data. Click OK when the message of the"Overwrite" appears at this time.

< TROUBLESHOOTING >

* Setting the "MIDI IN/OUT"

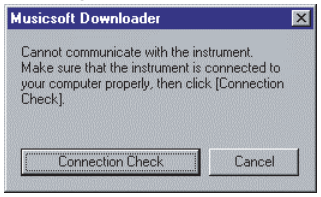

Click  .

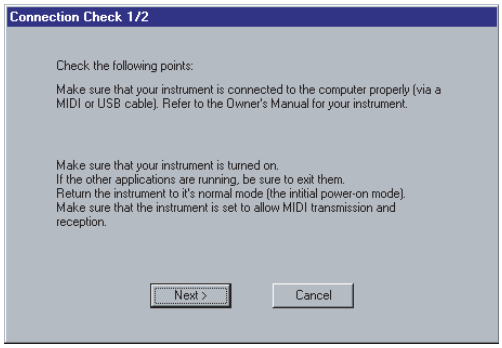

Click  .

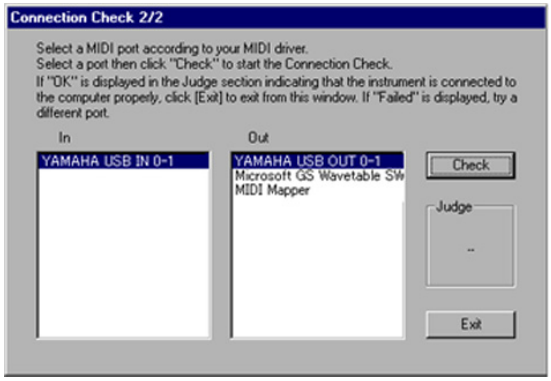

Choose "YAMAHA USB OUT 0-1" and click  .

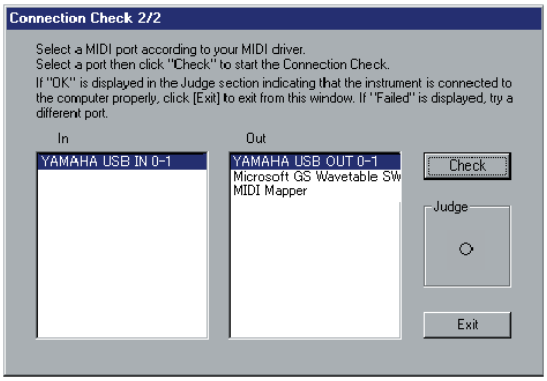

Click  , (Because the judgment is O , it is correctry connected.)

■ MIDI IMPLEMENTATION CHART

YAMAHA [Clavinova] Date :16-DEC-2004
Model CLP-265GP MIDI Implementation Chart Version : 1.0

Function...		Transmitted	Recognized	Remarks
Basic Channel	Default	1 - 16	1 - 16	
	Changed	×	1 - 16	
Mode	Default	3	3	
	Messages	×	×	
	Altered	**********	×	
Note Number : True voice		0 - 127 **********	0 - 127 0 - 127	
Velocity	Note ON	○ 9nH,v=1-127	○ 9nH,v=1-127	
	Note OFF	× 9nH,v=0	× 9nH,v=0 or 8nH	
After Touch	Key's	×	×	
	Ch's	×	×	
Pitch Bend		× *1	× 0 - 24 semi	
Control Change	0,32	○	○	Bank Select
	1	× *1	○	Modulation
	7	× *1	○	Main Volume
	10	× *1	○	Panpot
	11	○	○	Expression
	6,38	× *1	○	Data Entry
	64,66,67	○	○	
	84	× *1	○	Portamento Control
	91,94	○	○	Effect Depth
	96-97	× *1	○	RPN Inc,Dec
	100-101	× *1	○	RPN LSB,MSB
Prog Change : True #		○ 0 - 127 **********	○ 0 - 127	
System Exclusive		○	○	
Common	: Song Pos.	×	×	
	: Song Sel.	×	×	
	: Tune	×	×	
System Real Time	: Clock	○	○	
	: Commands	○	○	
Aux Mes- sages	: All Sound Off	○	○ (120,126,127)	
	: Reset All Cntrls	○	○ (121)	
	: Local ON/OFF	×	○ (122)	
	: All Notes OFF	○	○ (123-125)	
	: Active Sense	○	○	
	: Reset	×	×	

Notes: *1= These Control Change messages cannot be transmitted by panel operations, but can be transmitted by song playback data.

Mode 1 : OMNI ON , POLY Mode 2 : OMNI ON ,MONO ○ : Yes
Mode 3 : OMNI OFF, POLY Mode 4 : OMNI OFF,MONO × : No

■ MIDI DATA FORMAT

1. NOTE ON/OFF

Data format: [9nH] -> [kk] -> [vv]

9nH = Note ON/OFF event (n = channel number)
kk = Note number (Transmit: 09H ~ 78H = A-2 ~ C8 / Receive: 00H ~ 7FH = C-2 ~ G8)*
vv = Velocity (Key ON = 01H ~ 7FH, Key OFF = 00H)

Data format: [8nH] -> [kk] -> [vv] (reception only)

8nH = Note OFF event (n = channel number)
kk = Note number: 00H ~ 7FH = C-2 ~ G8
vv = Velocity

* If received value exceeds the supported range for the selected voice, the note is adjusted by the necessary number of octaves.

2. CONTROL CHANGE

Data format: [BnH] -> [cc] -> [vv]

BnH = Control change (n = channel number)
cc = Control number
vv = Data Range

(1) Bank Select

ccH	Parameter	Data Range (vvH)
00H	Bank Select MSB	00H: Normal
20H	Bank Select LSB	00H...7FH

Bank selection processing does not occur until receipt of next Program Change message.

(2) Modulation (reception only)

ccH	Parameter	Data Range (vvH)
01H	Modulation	00H-7FH

(3) Main Volume (reception only)

ccH	Parameter	Data Range (vvH)
07H	Volume MSB	00H...7FH

(4) Panpot (reception only)

ccH	Parameter	Data Range (vvH)
0AH	Panpot	00H-7FH

(5) Expression

ccH	Parameter	Data Range (vvH)
0BH	Expression MSB	00H...7FH

(6) Damper

ccH	Parameter	Data Range (vvH)
40H	Damper MSB	00H...7FH

(7) Sostenuto

ccH	Parameter	Data Range (vvH)
42H	Sostenuto	00H-3FH:off, 40H-7FH:on

(8) Soft Pedal

ccH	Parameter	Data Range (vvH)
43H	Soft Pedal	00H-3FH:off, 40H-7FH:on

(9) Effect1 Depth (Reverb Send Level)

ccH	Parameter	Data Range (vvH)
5BH	Effect1 Depth	00H...7FH

Adjusts the reverb send level.

(10) Effect4 Depth (Variation Effect Send Level)

ccH	Parameter	Data Range (vvH)
5EH	Effect4 Depth	00H...7FH

(11) RPN

ccH	Parameter	Data Range (vvH)
65H	RPN MSB	Coarse Tune 02H, Fine Tune 01H, Pitch Bend Range 00H
64H	RPN LSB	
06H	Data Entry MSB	
38H	Data Entry LSB	

3. MODE MESSAGES

Data format: [BnH] -> [cc] -> [vv]

BnH = Control event (n = channel number)
cc = Control number
vv = Data Range

(1) All Sound Off

ccH	Parameter	Data Range (vvH)
78H	All Sound Off	00H

Switches off all sound from the channel. Does not reset Note On and Hold On conditions established by Channel Messages.

(2) Reset All Controllers

ccH	Parameter	Data Range (vvH)
79H	Reset All Controllers	00H

Resets controllers as follows.

Controller	Value
Expression	127 (max)
Damper Pedal	0 (off)
Sostenuto	0 (off)
Soft Pedal	0 (off)

(3) Local Control (reception only)

ccH	Parameter	Data Range (vvH)
7AH	Local Control	00H (off), 7FH (on)

(4) All Notes Off

ccH	Parameter	Data Range (vvH)
7BH	All Notes Off	00H

Switches OFF all the notes that are currently ON on the specified channel. Any notes being held by the damper or sostenuto pedal will continue to sound until the pedal is released.

(5) Omni Off (reception only)

ccH	Parameter	Data Range (vvH)
7CH	Omni Off	00H

Same processing as for All Notes Off.

(6) Omni On (reception only)

ccH	Parameter	Data Range (vvH)
7DH	Omni On	00H

Same processing as for All Notes Off.

(7) Mono (reception only)

ccH	Parameter	Data Range (vvH)
7EH	Mono	00H

Same processing as for All Sound Off.

(8) Poly (reception only)

ccH	Parameter	Data Range (vvH)
7FH	Poly	00H

Same processing as for All Sound Off.

- When control change reception is turned OFF in the Function mode, control change data will not be transmitted or received.
- Local on/off, OMNI on/off are not transmitted. (The appropriate note off number is supplied with “All Note Off” transmission).
- When a voice bank MSB/LSB is received, the number is stored in the internal buffer regardless of the received order, then the stored value is used to select the appropriate voice when a program change message is received.
- The Multi-timbre and Poly modes are always active. No change occurs when OMNI ON, OMNI OFF, MONO, or POLY mode messages are received.

4. PROGRAM CHANGE

Data format: [CnH] -> [ppH]

CnH = Program event (n = channel number)
ppH = Program change number

P.C.#=Program Change number

CLP-265GP	MSB	LSB	P.C.#
GRANDPIANO 1	0	122	0
GRANDPIANO 2	0	112	0
E.PIANO 1	0	122	5
E.PIANO 2	0	122	4
HARPSICHORD 1	0	122	6
HARPSICHORD 2	0	123	6
VIBRAPHONE	0	122	11
CHURCH ORGAN 1	0	123	19
CHURCH ORGAN 2	0	122	19
JAZZ ORGAN	0	122	16
STRINGS 1	0	122	48
STRINGS 2	0	122	49
CHOIR	0	122	52
GUITAR	0	122	24

- When program change reception is turned OFF in the Function mode, no program change data is transmitted or received. Also, Bank MSB/LSB is not transmitted or received.

5. SYSTEM REALTIME MESSAGES

[rrH]
F8H: Timing clock
FAH: Start
FCH: Stop
FEH: Active sensing

Data	Transmission	Reception
F8H	Transmitted every 96 clocks	Received as 96-clock tempo timing when MIDI clock is set to External
FAH	Recorder start	Recorder start Not received when the MIDI clock is set to Internal.
FCH	Recorder stop	Recorder stop Not received when the MIDI clock is set to Internal.
FEH	Transmitted every 200 milliseconds	If a signal is not received via MIDI for more than 400 milliseconds, the same processing will take place for All Sound Off, All Notes Off and Reset All Controllers as when those signals are received.

- Caution: If an error occurs during MIDI reception, the Damper, Sostenuto, and Soft effects for all channels are turned off and an All Note Off occurs.

6. SYSTEM EXCLUSIVE MESSAGES (Yamaha MIDI Format)

Panel Data Transmit

Data format: [F0H] -> [43H] -> [0nH] -> [7CH] -> ... -> [F7H]
F0H, 43H, 0nH, 7CH (n: channel number)
00H, LLH (data length)
43H, 4CH, 20H, 20H (CL)
43H, 4CH, 50H, 27H, 30H, 35H (CLP05)
3xH, 3yH
aaH, bbH: Device No. aa=LSB, bb=MSB
aa=5EH, bb=16H (CLP-240)
aa=5BH, bb=16H (CLP-230)
[PANEL DATA]
[CHECK SUM (1byte)] = 0-(43H+4CH+20H+.....+Data end)
F7H

- **Panel Data Contents**

(1) 1'st Voice
(2) Dual On/Off
(3) Dual Voice
(4) Dual Balance
(5) Dual Detune
(6) Dual Voice1 Octave
(7) Dual Voice2 Octave
(8) Dual Voice1 Effect Depth
(9) Dual Voice2 Effect Depth
(10) —
(11) —
(12) —
(13) —
(14) —
(15) —
(16) —
(17) —
(18) —
(19) Reverb Type 1
(20) Reverb Type 2
(21) Reverb Depth 1
(22) Reverb Depth 2
(23) Effect Type 1
(24) Effect Type 2
(25) Effect Depth
(26) —
(27) Touch Sensitivity
(28) Fixed Data
(29) Left Pedal
(30) Soft Pedal Depth
(31) Absolute tempo low byte
(32) Absolute tempo high byte
(33) —
(34) —
(35) —
(36) Brilliance

- Panel data send requests cannot be received.

7. SYSTEM EXCLUSIVE MESSAGES (Universal System Exclusive)

(1) Universal Realtime Message

Data format: [F0H] -> [7FH] -> [XnH] -> [04H] -> [01H] -> [llH] -> [mmH] -> [F7H]

MIDI Master Volume

- Simultaneously changes the volume of all channels.
- When a MIDI master volume message is received, the volume only has affect on the MIDI receive channel, not the panel master volume.

F0H = Exclusive status
7FH = Universal Realtime
7FH = ID of target device
04H = Sub-ID #1=Device Control Message
01H = Sub-ID #2=Master Volume
llH = Volume LSB
mmH = Volume MSB
F7H = End of Exclusive

or

F0H = Exclusive status
7FH = Universal Realtime
XnH = When n is received n=0~F, whichever is received.
X = don't care
04H = Sub-ID #1=Device Control Message
01H = Sub-ID #2=Master Volume
llH = Volume LSB
mmH = Volume MSB
F7H = End of Exclusive

(2) Universal Non-Realtime Message (GM On)

General MIDI Mode On

Data format: [F0H] -> [7EH] -> [XnH] -> [09H] -> [01H] -> [F7H]

F0H = Exclusive status
7EH = Universal Non-Realtime
7FH = ID of target device
09H = Sub-ID #1=General MIDI Message
01H = Sub-ID #2=General MIDI On
F7H = End of Exclusive

or

F0H = Exclusive status
7EH = Universal Non-Realtime
XnH = When received, n=0~F.
X = don't care
09H = Sub-ID #1=General MIDI Message
01H = Sub-ID #2=General MIDI On
F7H = End of Exclusive

When the General MIDI mode ON message is received, the MIDI system will be reset to its default settings.
This message requires approximately 50ms to execute, so sufficient time should be allowed before the next message is sent.

8. SYSTEM EXCLUSIVE MESSAGES (XG Standard)

(1) XG Native Parameter Change

Data format: [F0H] -> [43H] -> [1nH] -> [4CH] -> [hhH] -> [mmH] -> [llH] -> [ddH] -> [F7H]

F0H = Exclusive status
43H = YAMAHA ID
1nH = When received, n=0~F.
When transmitted, n=0.
4CH = Model ID of XG
hhH = Address High
mmH = Address Mid
llH = Address Low
ddH = Data
|
F7H = End of Exclusive

Data size must match parameter size (2 or 4 bytes).
When the XG System On message is received, the MIDI system will be reset to its default settings.
The message requires approximately 50ms to execute, so sufficient time should be allowed before the next message is sent.

(2) XG Native Bulk Data (reception only)

Data format: [F0H] -> [43H] -> [0nH] -> [4CH] -> [aaH] -> [bbH] -> [hhH] -> [mmH] -> [llH] ->[ddH] ->...-> [ccH] -> [F7H]

F0H = Exclusive status
43H = YAMAHA ID
0nH = When received, n=0~F.
When transmitted, n=0.
4CH = Model ID of XG
aaH = ByteCount
bbH = ByteCount
hhH = Address High
mmH = Address Mid
llH = Address Low
ddH = Data
| |
| |
ccH = Check sum
F7H = End of Exclusive

- Receipt of the XG SYSTEM ON message causes reinitialization of relevant parameters and Control Change values. Allow sufficient time for processing to execute (about 50 msec) before sending the CLP-240/230 another message.
- XG Native Parameter Change message may contain two or four bytes of parameter data (depending on the parameter size).
- For information about the Address and Byte Count values, refer to Table 1 below. Note that the table's Total Size value gives the size of a bulk block. Only the top address of the block (00H, 00H, 00H) is valid as a bulk data address.

9. SYSTEM EXCLUSIVE MESSAGES (Clavinova MIDI Format)

Data format: [F0H] -> [43H] -> [73H] -> [01H] -> [nnH] -> [F7H]

F0H = Exclusive status
43H = Yamaha ID
73H = Clavinova ID
01H = Product ID (CLP common)
nnH = Substatus
nn Control
02H Internal MIDI clock
03H External MIDI clock
F7H = End of Exclusive

10. SYSTEM EXCLUSIVE MESSAGES (Special Control)

Data format: [F0H] -> [43H] -> [73H] -> [66H] -> [11H] -> [0nH] -> [ccH] -> [vvH] -> [F7H]

F0H = Exclusive status
43H = Yamaha ID
73H = Clavinova ID
7FH = Extended Product ID
xxH = Product ID 49H
11H = Special control
0nH = Control MIDI change (n=channel number)
cc = Control number
vv = Value
F7H = End of Exclusive

Control	0n	ccH	vvH
Split Point	Always 00H	14H	14H: Split Key Number
Metronome	Always 00H	1BH	00H: No accent 01H-0FH: 1/4-15/4 7FH: off
Damper Level	ch: 00H-0FH	3DH	(Sets the Damper Level for each channel) 00H-7FH
Channel Detune	ch: 00H-0FH	43H	(Sets the Detune value for each channel) 00H-7FH
Voice Reserve	ch: 00H-0FH	45H	00H : Reserve off 7FH : on*

* When Volume, Expression is received for Reserve On, they will be effective from the next Key On. Reserve Off is normal.

11. SYSTEM EXCLUSIVE MESSAGES (Others)

Data format: [F0H] -> [43H] -> [1nH] -> [27H] -> [30H] -> [00H] -> [00H] -> [mmH] -> [llH] -> [ccH] -> [F7H]

Master Tuning (XG and last message priority) simultaneously changes the pitch of all channels.
F0H = Exclusive Status
43H = Yamaha ID
1nH = When received, n=0~F.
When transmitted, n=0.
27H = Model ID of TG100
30H = Sub ID
00H =
00H =
mmH = Master Tune MSB
llH = Master Tune LSB
ccH = don't care (under 7FH)
F7H = End of Exclusive

<Table 1>

MIDI Parameter Change table (SYSTEM)

Address (H)	Size (H)	Data (H)	Parameter	Description	Default value (H)
00 00 00	4	020C - 05F4*	MASTER TUNE	-50 - +50[cent]	00 04 00 00
01				1st bit 3 - 0 → bit 15 - 12	400
02				2nd bit 3 - 0 → bit 11 - 8	
03				3rd bit 3 - 0 → bit 7 - 4	
				4th bit 3 - 0 → bit 3 - 0	
04	1	00 - 7F	MASTER VOLUME	0 - 127	7F
05	1	—	—		
7E		00	XG SYSTEM ON	00=XG system ON	
7F		00	RESET ALL PARAMETERS	00=ON (receive only)	
TOTAL SIZE 07					

*Values lower than 020CH select -50 cents. Values higher than 05F4H select +50 cents.

<Table 2>

MIDI Parameter Change table (EFFECT 1)

Refer to the “Effect MIDI Map” for a complete list of Reverb, Chorus and Variation type numbers.

Address (H)	Size (H)	Data (H)	Parameter	Description	Default value (H)
02 01 00	2	00-7F	REVERB TYPE MSB	Refer to Effect MIDI Map	01 (=HALL1)
		00-7F	REVERB TYPE LSB	00 : basic type	00
02 01 40	2	00-7F	VARIATION TYPE MSB	Refer to Effect MIDI Map	00(=Effect off)
		00-7F	VARIATION TYPE LSB	00 : basic type	00

• “VARIATION” refers to the EFFECT on the panel.

<Table 3>

MIDI Parameter Change table (MULTI PART)

Address (H)	Size (H)	Data (H)	Parameter	Description	Default value (H)
08 nn 11	1	00 - 7F	DRY LEVEL	0 - 127	7F

nn = Part Number

• Effect MIDI Map

REVERB

	MSB	LSB
ROOM	02H	10H
HALL 1	01H	10H
HALL 2	01H	11H
STAGE	03H	10H
OFF	00H	00H

EFFECT

	MSB	LSB
CHORUS	42H	10H
PHASER	48H	10H
TREMOLO	46H	10H
ROTARY SP	47H	10H
OFF	00H	00H

Clavinova

CLP-265GP

PARTS LIST

■ CONTENTS

OVERALL ASSEMBLY 2
MAIN UNIT 4
KEY BED ASSEMBLY 10
BACK TOP BOARD ASSEMBLY 11
PANEL ASSEMBLY 12
MUSIC REST ASSEMBLY 14
TOP BOARD ASSEMBLY L 15
TOP BOARD ASSEMBLY S 16
ARM ASSEMBLY L 18
ARM ASSEMBLY R 19
END BLOCK ASSEMBLY (L, R) 20
KEY COVER ASSEMBLY 21
FRONT RAIL ASSEMBLY 22
HP JACK ASSEMBLY 23
JACK ASSEMBLY 24
MA80S ASSEMBLY 25
FU60 ASSEMBLY 26
PEDAL BOX UNIT 27
PEDAL ASSEMBLY 28
BENCH (BC-100PE) 29
KEYBOARD ASSEMBLY 30
ELECTRICAL PARTS 32

Note) DESTINATION ABBREVIATIONS

A:	Australian model	O:	Chinese model
B:	British model	Q:	South-east Asia model
C:	Canadian model	T:	Taiwan model
D:	German model	U:	U.S.A. model
E:	European model	V:	General export model (110V)
F:	French model	W:	General export model (220V)
H:	North European model	N,X:	General export model
I:	Indonesian model	Y:	Export model
J:	Japanese model	K:	Korean model
M:	South African model		

■ WARNING

Components having special characteristics are marked ⚠ and must be replaced with parts having specifications equal to those originally installed.

- The numbers in “QTY” shows quantities for each unit.
- The parts with “--” in “Part No.” are not available as spare parts.
- The second letter of the shaded ( ) part number is I, not one.
- The second letter of the shaded ( ) part number is O, not zero.

■ OVERALL ASSEMBLY

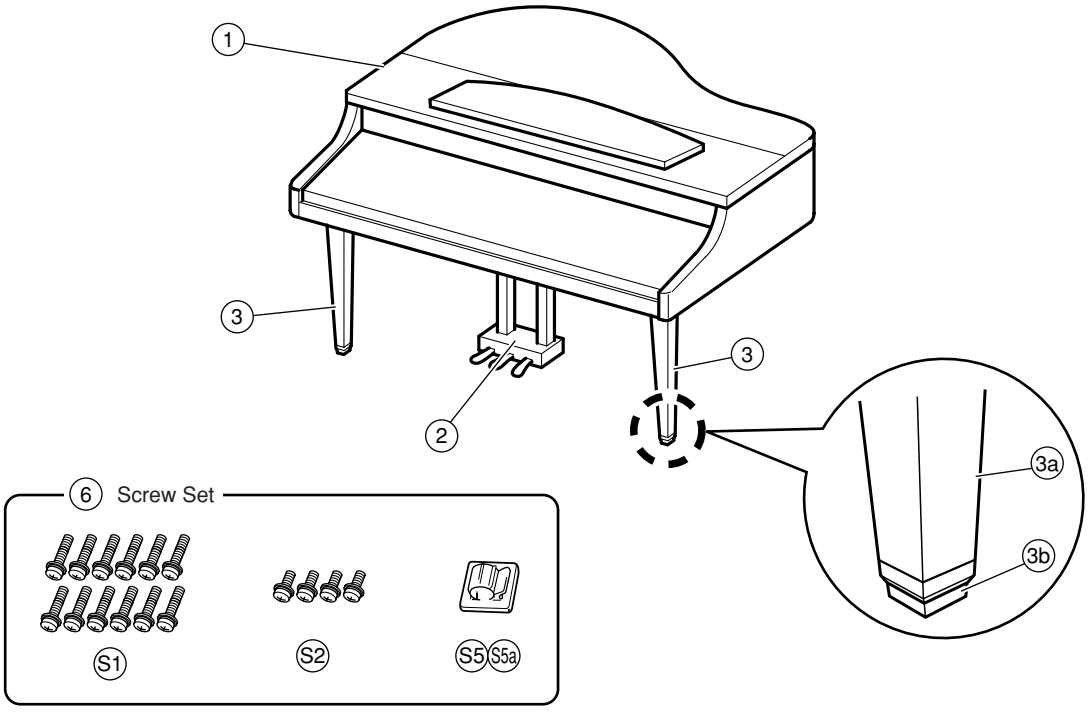

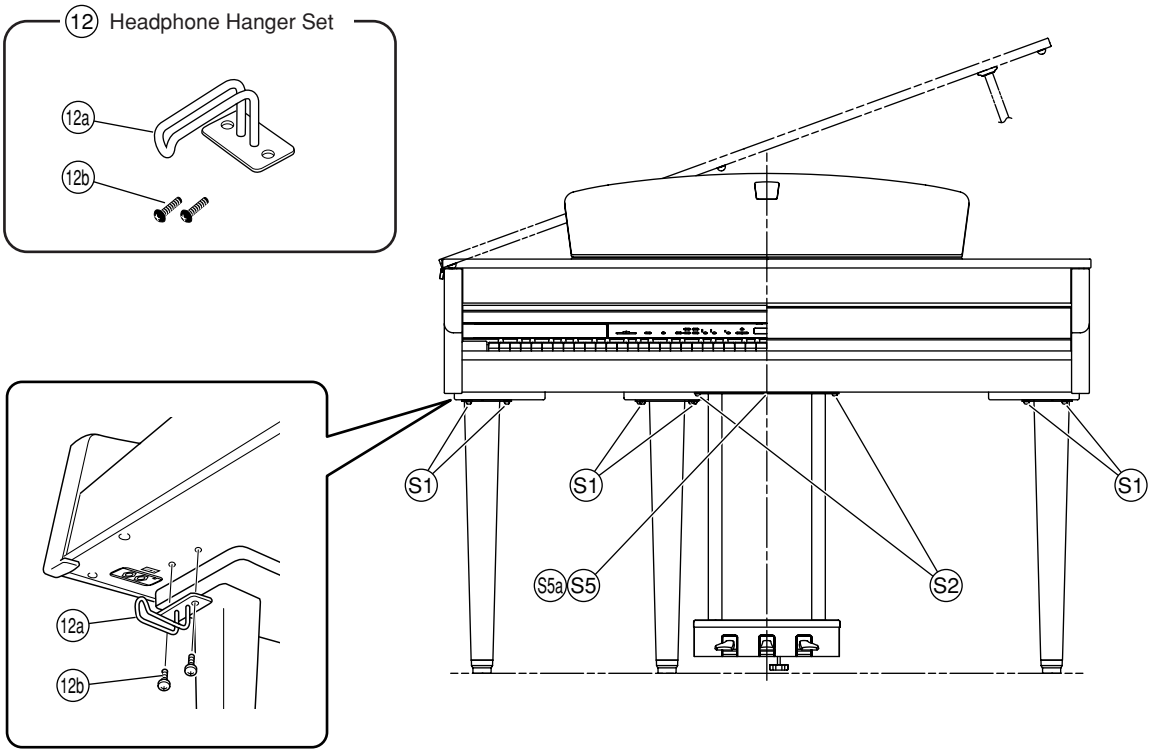

	REF NO.	PART NO.	DESCRIPTION		部品名	REMARKS	QTY	RANK
			OVERALL ASSEMBLY		総組立	CLP-265GP		
	1	--	Main Unit	CL U	メインユニットU	U (WH34950)		
	1	--	Main Unit	CL E	メインユニットE	E,B (WH34960)		
	1	--	Main Unit	CL N	メインユニットN	N (WH34970)		
	1	--	Main Unit	CL K	メインユニットK	K (WH34980)		
	2	--	Pedal Box Unit	CL	ペダルボックスAss'y	(WH35070)		
*	3	WH350900	Leg Assembly	CL	脚柱Ass'y		3	
	3a	--	Leg		脚柱サブAss'y	(WE96330)		
	3a	--	Leg		脚柱サブAss'y	(WH50100)		
*	3b	WE735900	Leg Cap		脚キャップ成形品			
			ACCESSORIES		付属品			
*	6	WF789500	Screw Set	CL	ネジセット			
⚠	7	V2917000	AC Cord Set	U 2P 2.44m 7A	電源コードセット	U		06
⚠	7	VT015800	AC Cord Set	UC 2P 2.44m 7A	電源コードセット			06
⚠	7	V2917100	AC Cord Set	E 2P 2.5m 2.5A	電源コードセット	E,N		05
⚠	7	VT015900	AC Cord Set	E 2P 2.5m	電源コードセット			05
⚠	7	V3126500	AC Cord Set	B 2P 2.5m	電源コードセット	B		
⚠	7	WE670300	AC Cord Set	B 2P 2.5m	電源コードセット			08
⚠	7	V8911300	AC Cord Set	K 2P 2.5m	電源コードセット	K		05
	10	WG479600	Bench	BC-100PE U/N/K	同梱品セット椅子	U,N,K		19
	11	X6010A00	CDROM	CDROM 12cm	CD-ROM 海外			03
	12	V8740600	Headphone Hanger Set	CL	ヘッドホンハンガーセット			07
	12a	V8972600	Headphone Hanger		ヘッドホンハンガー			04
	12b	WF000800	Truss Head Screw	4.0X10 MFZN2B3	小ネジ+TRUS		2	01
⚠	14	VK726100	AC Adapter	CCT5902-0701F	AC アダプタ	N		03
*		WF789500	Screw Set	CL	ネジセット			
*	S1	WE995700	Pan Head Screw	6.0X40 MFZN2B3 SP	小ネジ+PAN		12	01
	S2	WF003300	Pan Head Screw	6.0X20 MFZN2B3 SW	小ネジ+PAN		4	
	S5	--	Cord Clamp Set		コードクランプセット	(WA29790)		
	S5a	VP592100	Cord Clamper	DKN-5(VHB)	NKクランプ			03
*	S5a	WB090800	Cord Clamper	OD-5 PT	CSクランプ			
			JIGS		工具			99
		TX000670	Rod		ロッド			

* : New Parts

RANK : Japan only

■ MAIN UNIT

● Side View

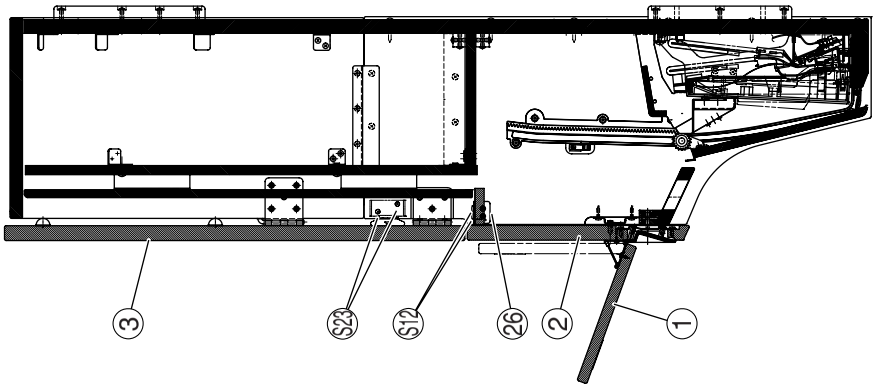

● Top View

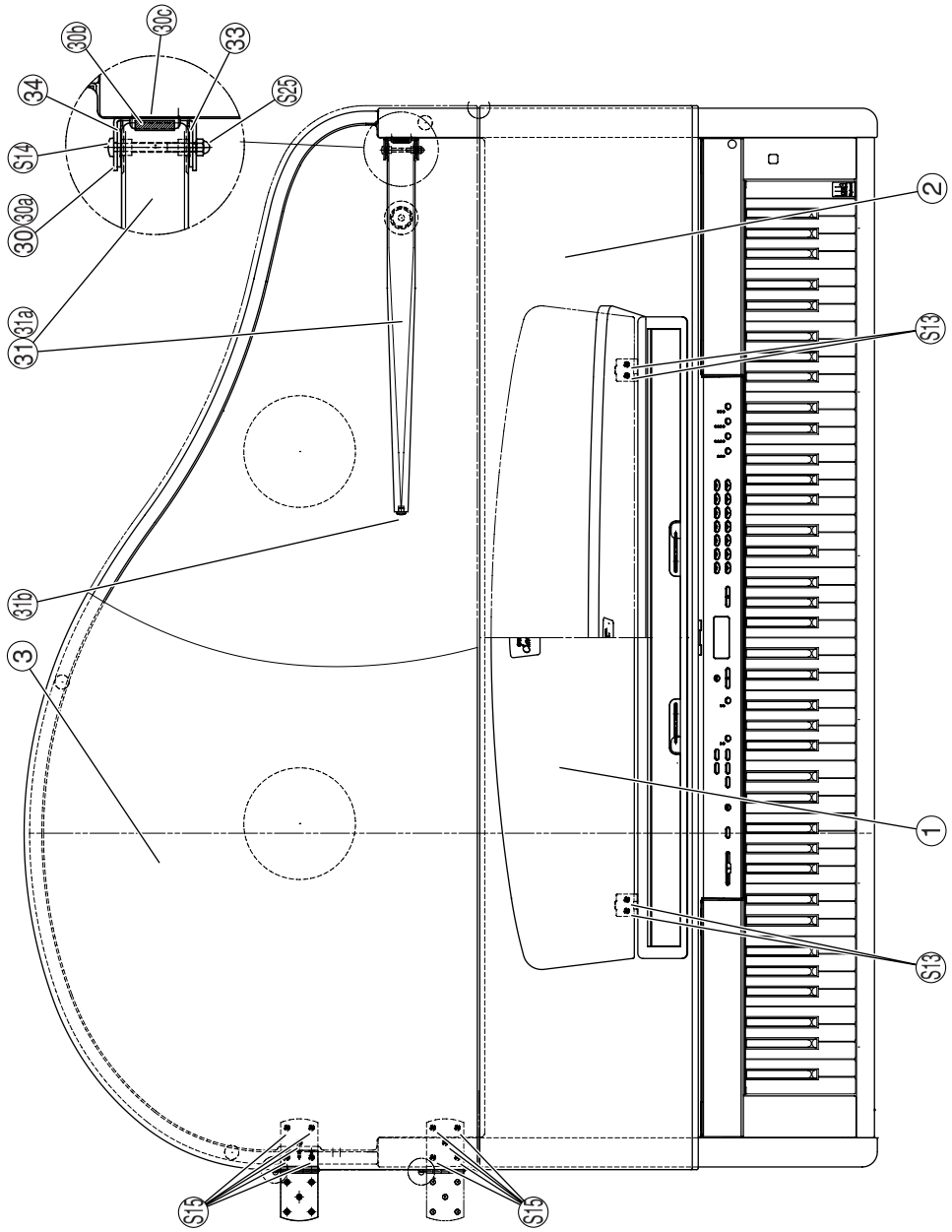

● Top View

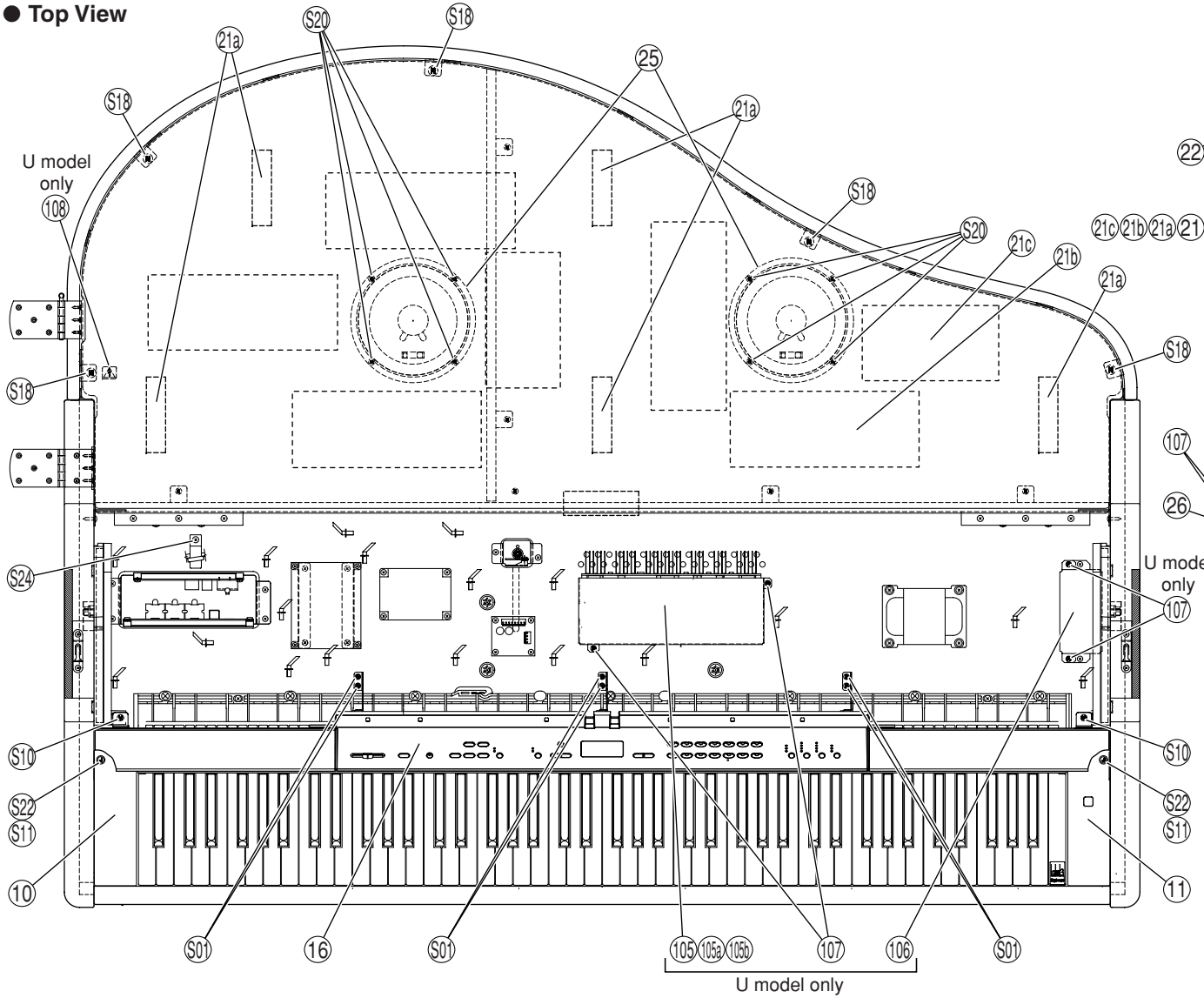

● Side View

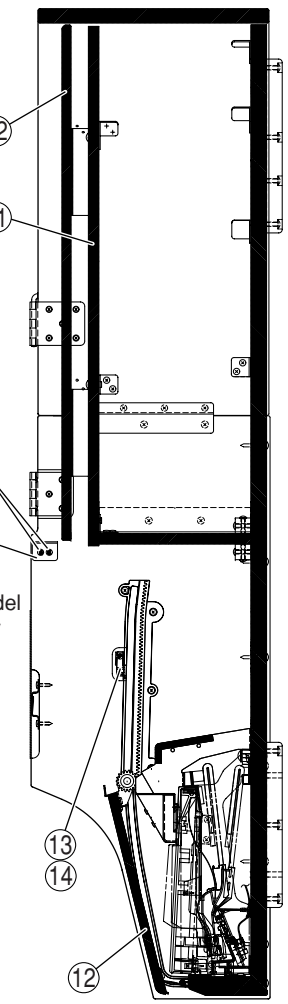

● **Top View**

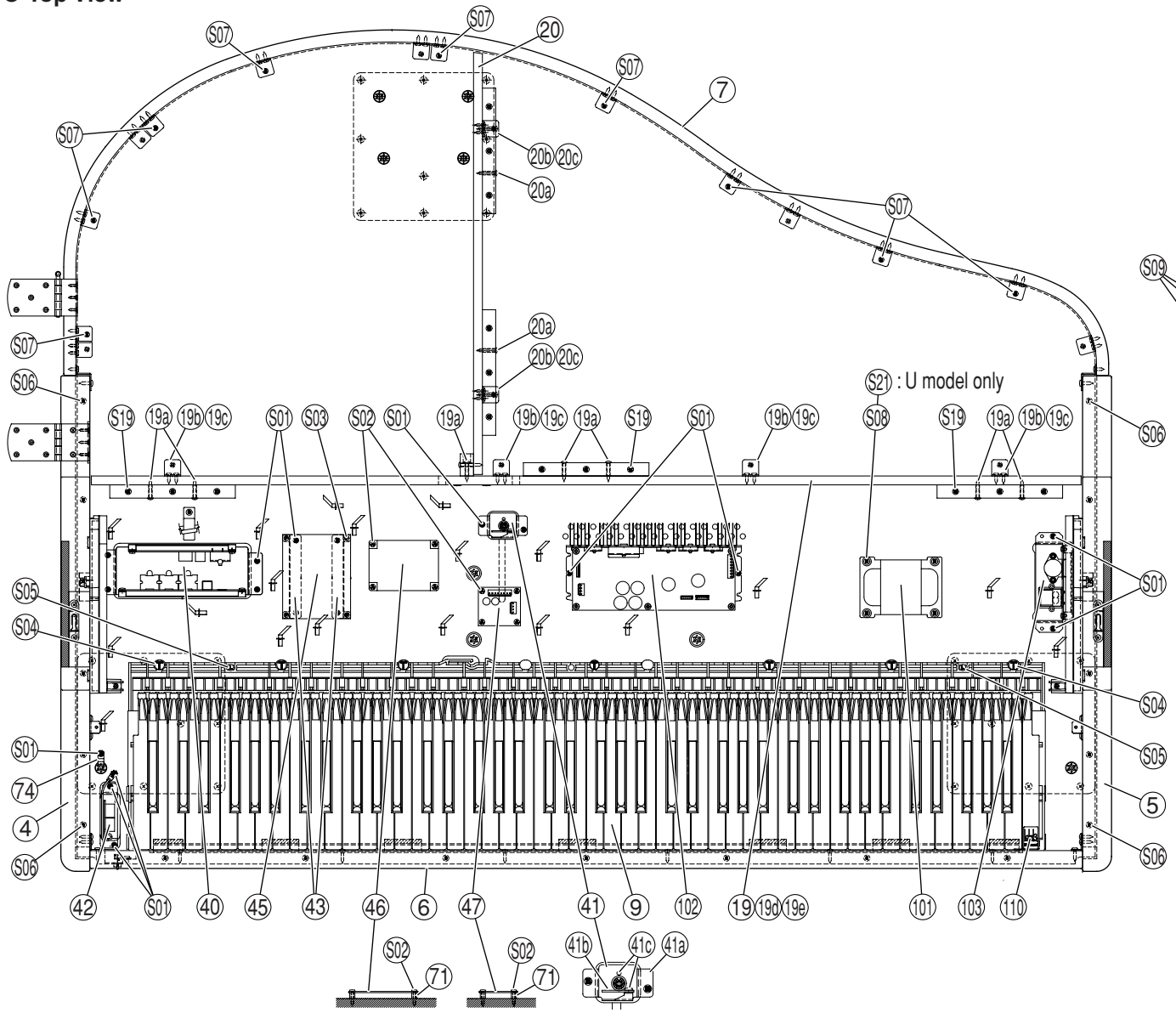

● **Side View**

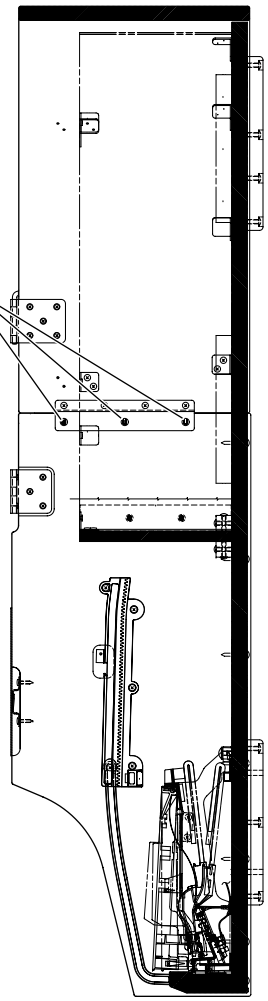

● **BottomView**

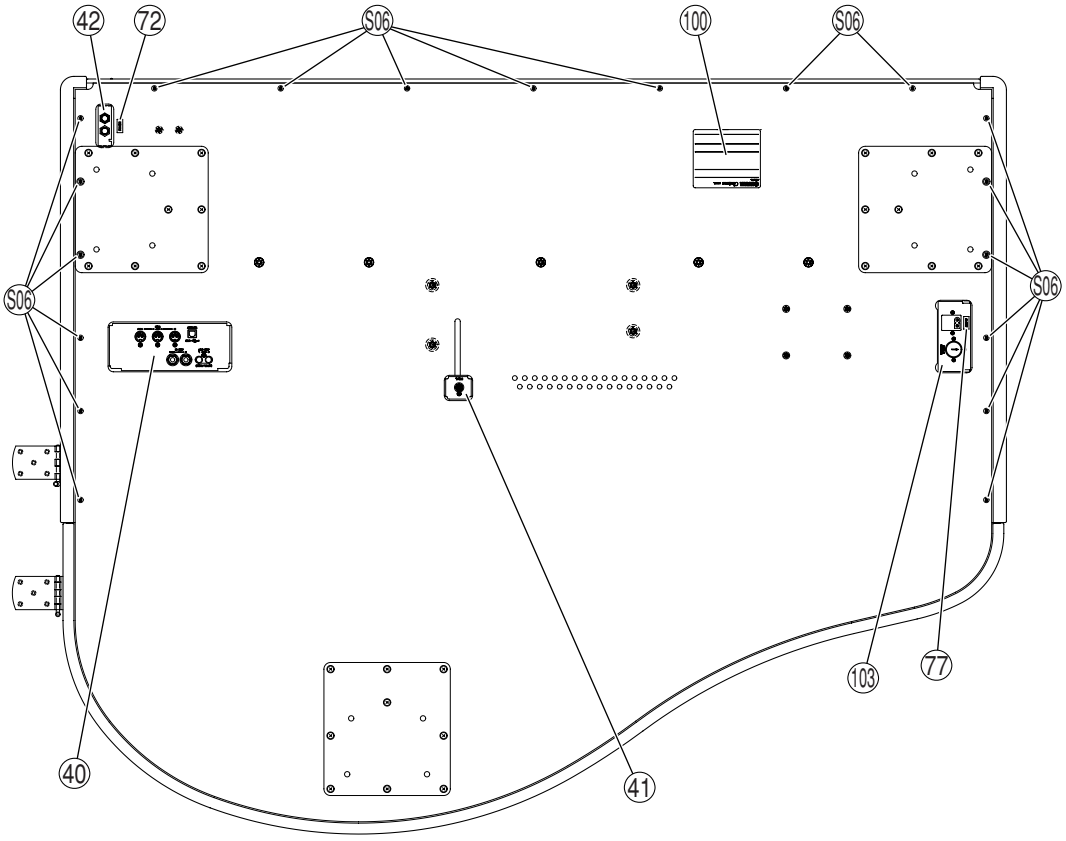

● **Speaker Grille Assembly**

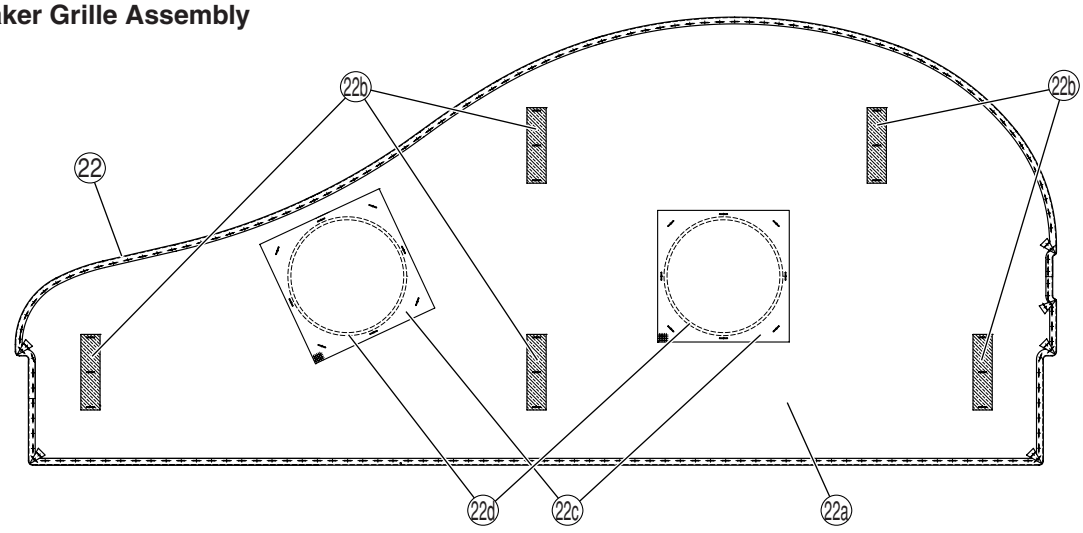

	REF NO.	PART NO.	DESCRIPTION		部品名	REMARKS		QTY	RANK
			MAIN UNIT		メインユニット	CLP-265GP			
		--	Main Unit	CL U	メインユニットU	U	(WH34950)		
		--	Main Unit	CL E	メインユニットE	E,B	(WH34960)		
		--	Main Unit	CL N	メインユニットN	N	(WH34970)		
		--	Main Unit	CL K	メインユニットK	K	(WH34980)		
		--	Main Unit Sub Assembly	CL	共通部品構成		(WH35050)		
	100	--	Name Plate	CL U	銘板	U	(WJ28240)		
	100	--	Name Plate	CL E	銘板（承認後）	E,B	(WJ28280)		
	100	--	Name Plate	CL N	銘板	N	(WJ28320)		
⚠	101	**X6160A00**	Power Transformer	UL A	電源トランス	U			13
⚠	101	**X6161A00**	Power Transformer	IEC E	電源トランス	E,B,K			13
⚠	101	**X5303A00**	Power Transformer	IEC_EN E	電源トランス	N			
⚠	101	**X6162A00**	Power Transformer	IEC/EN60691 E	電源トランス	N			13
	102	**WC028900**	MA80S Assembly	J,U	MA80S Ass'y	U			17
	102	**WC029000**	MA80S Assembly	E,N	MA80S Ass'y	E,B,N,K			17
	103	**VT152100**	FU60 Assembly	U	FU60 Ass'y	U			10
	103	**VT152200**	FU60 Assembly	E,GBR	FU60 Ass'y	E,B,K			10
	103	**VT153300**	FU60 Assembly	73 N	FU60 Ass'y	N			12
	105	--	MA Cover Assembly		MAカバーAss'y	U	(V766590)		
	105a	--	Cover, MA		MAカバー		(V766600)		
	105b	--	Protection Tape	#590S	保護テープ		(VH61100)		
	106	**VU348800**	Cover, FU		FUカバー	U			06
	107	**WE970900**	Bind Head Tapping Screw-1	3.5X12 MFZN2W3	TP#1+BIND	U		4	01
*	107	**WF831100**	Bind Head Tapping Screw-1	3.5X11 MFZN2W3	TP#1+BIND			4	
	108	**V8462100**	Graphic Mark		グラフィックマーク	U		2	
	110	--	Label E	GH3	GH3鍵盤ラベルE		(WD49760)		
	111	--	Label WEEE		WEEEマークラベル	E,B	(WG07730)		
	W01	--	Connector Assembly	MAIN	束線構成メイン		(WH48180)		
		--	Connector Assembly	MAIN	束線構成メイン		(WH48180)		
	M1	--	Connector Assembly	PH 4P-650	PH束線		(WD30710)		
	M2	--	Connector Assembly	MIDI 5P-200	MIDI束線		(WE10310)		
	M3	--	Connector Assembly	PH 5P-350	PH束線		(WD30950)		
	M4	--	Connector Assembly	PH 11P-200	PH束線		(WD32720)		
	M5	--	USB Cable	USB L=300 5P	USBケーブル		(WD25310)		
	M7	**WF740600**	Connector Assembly	KB 7P-530	KB束線				02
	M8	--	Connector Assembly	+B 2P	+B束線		(WH66520)		
	M9	--	Connector Assembly	PH 7P-450	PH束線		(WD31570)		
	M10	--	Connector Assembly	EQ	EQ束線		(WH98170)		
	M10a	--	Connector Assembly	PH 10P-550	PH束線		(WD32490)		
	M10b	**V3122900**	Data Line Filter	K1 NFT-13BK2	データラインフィルタ				06
	M10c	**VD947800**	Data Line Filter	ESD-R-25D-B	データラインフィルタ				05
	M10d	**CB069250**	Cord Holder	BK-1	インシュロックタイ				01
	M10e	**VV558400**	Cord Binder	AZ-100	結束バンド				01
	M11	--	Connector Assembly	NW 4P	NW束線		(WE20700)		
	M12	--	Connector Assembly	PH 9P-250	PH束線		(WD32130)		
	M16	**VP834600**	Adhesive Tape	12X50	粘着テープ				05
	M17	--	Adhesive Tape	12X70	粘着テープ		(VI59810)	2	
		--	Main Unit Sub Assembly	CL	共通部品構成		(WH35050)		
*	1	**WH354600**	Music Rest Assembly	CL	譜面板Ass'y				
	2	--	Top Board Assembly (S)	CL	屋根（小）Ass'y		(WH35490)		
*	3	**WH355100**	Top Board Assembly (L)	CL	屋根（大）Ass'y				
*	4	**WH355300**	Arm Assembly L	LEFT	腕木Ass'y（L）				
*	5	**WH355400**	Arm Assembly R	RIGHT	腕木Ass'y（R）				
	6	--	Front Rail Assembly	CL	口棒Ass'y		(WH35570)		
*	7	**WH355800**	Back Top Board Assembly	CL	背面框Ass'y				
	8	--	Key Bed Assembly	CL	棚板集成		(WH35600)		
	9	**V8278600**	Keyboard Assembly	GH3 A88 K6	GH3鍵盤				57
*	10	**WH356300**	End Block Assembly L	LEFT	拍子木Ass'y（L）				
	11	--	End Block Assembly R	RIGHT	拍子木Ass'y（R）		(WH35640)		
*	12	**WH356500**	Key Cover Assembly	CL	スライド蓋Ass'y				
	13	**VS312100**	Rack Cover L	LEFT	ラックカバー L				03
	14	**VS312200**	Rack Cover R	RIGHT	ラックカバー R				03
	15	--	Grease	GP-837DE	フロイル		(WF42320)		
	16	--	Panel Assembly	CL	パネルAss'y		(WH35670)		
	19	--	Partition Assembly A	A	仕切り板Ass'y_A		(WH35710)		
	19a	**WE970200**	Truss Head Tapping Screw-1	3.5X25 MFZN2W3	TP#1+TRUS			8	01
	19b	--	Holder, Back Top Board(B)		背面框金具（B）		(V913990)	4	
	19c	**WE970900**	Bind Head Tapping Screw-1	3.5X12 MFZN2W3	TP#1+BIND			8	01

* : New Parts

RANK : Japan only

	REF NO.	PART NO.	DESCRIPTION		部品名	REMARKS	QTY	RANK
*	19c	**WF831100**	Bind Head Tapping Screw-1	3.5X11 MFZN2W3	ＴＰ＃１＋ＢＩＮＤ		8	
	19d	**--**	Connector Assembly	SP	Ｓ　Ｐ　束　線	(WH48820)		
	19e	**VU891300**	Cord Holder	L80	ビニタイ黒１．０芯Ｌ		2	03
	20	**--**	Partition Assembly B	B	仕切り板Ａｓｓ’ｙ＿Ｂ	(WH35720)		
	20a	**WE970200**	Truss Head Tapping Screw-1	3.5X25 MFZN2W3	ＴＰ＃１＋ＴＲＵＳ		4	01
	20b	**--**	Holder, Back Top Board(B)		背面框金具（Ｂ）	(V913990)	2	
	20c	**WE970900**	Bind Head Tapping Screw-1	3.5X12 MFZN2W3	ＴＰ＃１＋ＢＩＮＤ		4	01
*	20c	**WF831100**	Bind Head Tapping Screw-1	3.5X11 MFZN2W3	ＴＰ＃１＋ＢＩＮＤ		4	
	21	**--**	Partition Assembly C	C	仕切り板Ａｓｓ’ｙ＿Ｃ	(WH35730)		
	21a	**--**	Dual Lock Fastener(Female)	BLACK	ファスナー（メス）	(V620770)	5	
	21b	**--**	Felt A, Acoustic Material	250X100X10	吸音材＃３０１１－Ａ	(WJ32150)	5	
	21c	**--**	Felt B, Acoustic Material	180X100X10	吸音材＃３０１１－Ｂ	(WJ32160)	2	
	22	**--**	Speaker Grille Assembly	CL	ＳＰグリルＡｓｓ’ｙ	(WH35740)		
	22a	**--**	Cloth	500 MEU9701	クロスＭＥＵ９７０１	(WH49640)		
	22b	**--**	Dual Lock Fastener(Male)	BLACK 100X25.4	ファスナー（オス）	(V620780)	5	
	22c	**V9996000**	Metal Net	75X175	金網		2	05
	22d	**--**	Cushion	PEFU2X4X480TE-PUTS	クッション	(V630000)		
	25	**X6296A00**	Speaker(Woofer)	16cm 6ohm 40W	スピーカ		2	09
	26	**--**	Stopper		屋根ストッパー塗装品	(WH49680)	2	
*	30	**WH357800**	Support Bar Angle Assembly	CL	支持棒金具Ａｓｓ’ｙ			
	30a	**--**	Support Bar Angle		支持棒金具	(WH37530)		
	30b	**--**	Felt	22X11XT1	フェルト	(WB23920)		
	30c	**--**	Adhesive Tape	#500 36X15	両面粘着テープ	(WC11860)		
*	31	**WH357500**	Support Bar Assembly	CL	屋根支持棒Ａｓｓ’ｙ			
	31a	**--**	Support Bar		屋根支持棒塗装	(WH37540)		
	31b	**V6175800**	Cap		支持棒キャップ			03
	33	**VY941200**	Bushing F	F	ブッシュ　Ｆ			03
	34	**VY941300**	Bushing R	R	ブッシュ　Ｒ			03
	40	**--**	Jack Assembly	CL	ジャックＡｓｓ’ｙ	(WH35790)		
	41	**--**	PK Connector	PK	ＰＫコネクタ	(WC15270)		
	41a	**V7585400**	PK Angle	TED)	ペダル接続金具塗装印			05
	41b	**WC561200**	Circuit Board	PJK	ＰＪＫシート			04
	41c	**WE774400**	Bind Head Tapping Screw-B	3.0X8 MFZN2B3	Ｂタイト＋ＢＩＮＤ		2	01
	42	**--**	HP Jack Assembly		ＨＰジャックＡｓｓ’ｙ	(WC04600)		
	43	**--**	Holder, DM		ＤＭ金具	(WE09540)	2	
*	45	**WJ285800**	Circuit Board	DM	ＤＭシート			
*	46	**WH503400**	Circuit Board	EQ	ＥＱシート			
	47	**WC175500**	Circuit Board	NET1	ＮＥＴ１シート			04
	71	**CB040950**	Spacer		スペーサ		8	03
	72	**--**	Label, PHONES	PHONES	ＰＨＯＮＥＳラベル	(VS47810)		
	74	**--**	Earth Plate		アース金具	(WJ02950)		
	77	**VT501000**	Label	AC INLET	ＡＣ　ＩＮＬＥＴラベル			03
	S01	**WE970900**	Bind Head Tapping Screw-1	3.5X12 MFZN2W3	ＴＰ＃１＋ＢＩＮＤ		24	01
	S02	**WE971500**	Bind Head Tapping Screw-1	3.5X20 MFZN2W3	ＴＰ＃１＋ＢＩＮＤ		8	01
	S03	**WE774300**	Bind Head Tapping Screw-B	3.0X8 MFZN2W3	Ｂタイト＋ＢＩＮＤ		6	01
	S04	**WF786700**	Pan Head Screw	5.0X30 MFZN2W3	小ネジ＋ＰＡＮ		7	01
	S05	**WE971900**	Bind Head Tapping Screw-1	4.0X14 MFZN2W3	ＴＰ＃１＋ＢＩＮＤ		2	01
*	S06	**WH513700**	Truss Head Tapping Screw-1	3.5X35 MFZN2W3	ＴＰ＃１＋ＴＲＵＳ		19	
	S07	**WF743500**	Truss Head Tapping Screw-1	3.5X16 MFZN2W3	ＴＰ＃１＋ＴＲＵＳ		17	01
*	S08	**WG402400**	Bind Head Screw	4.0X18 MFZN2-W3	＋バインド小ネジ		4	
*	S09	**WF746600**	Hex.Head Tapping Screw-1	4.0X16 MFZN2W3	ＴＰ＃１＋ＨＥＸ		6	
	S10	**WE974500**	Bind Head Tapping Screw-B	4.0X10 MFZN2W3	Ｂタイト＋ＢＩＮＤ		2	01
*	S11	**WH513800**	Bind Head Tapping Screw-B	4.0X20 MFZN2W3	Ｂタイト＋ＢＩＮＤ		2	
	S12	**WE983100**	Bind Head Screw	4.0X14 MFZN2B3	小ネジ＋ＢＩＮＤ		2	01
	S13	**WE971200**	Bind Head Tapping Screw-1	3.0X16 MFZN2B3	ＴＰ＃１＋ＢＩＮＤ		4	01
	S14	**WJ346900**	Bind Head Screw	5.0X50 MFZN2B3	小ネジ＋ＢＩＮＤ			
	S15	**V6295100**	Oval Head Tapping Screw-1	3.0X14 BS	＋丸皿ＴＰ　１種		10	01
*	S18	**WF355900**	Truss Head Screw	4.0X16 MFZN2W3	小ネジ＋ＴＲＵＳ		11	
	S19	**WE979900**	Truss Head Tapping Screw-1	3.5X30 MFZN2W3	ＴＰ＃１＋ＴＲＵＳ		17	01
	S20	**WF109500**	Bind Head Tapping Screw-1	4.0X16 MFZN2W3	ＴＰ＃１＋ＢＩＮＤ		8	01
	S21	**WF578800**	Flat Washer	4.0X12X1.0 MFZN2W3	平座みがき丸	U	4	01
	S22	**WF578600**	Flat Washer	4.0X8X0.8 MFZN2W3	平座小型丸		4	01
	S23	**WE955100**	Bind Head Tapping Screw-1	3.5X16 MFZN2B3	ＴＰ＃１＋ＢＩＮＤ		2	01
	S24	**WE970500**	Truss Head Tapping Screw-1	3.5X14 MFZN2W3	ＴＰ＃１＋ＴＲＵＳ		2	01
	S25	**WJ347000**	Nut Hex Cap	#3 M5 MFZN2B3	ナット　６角袋			

＊: New Parts

RANK : Japan only

■ KEY BED ASSEMBLY

● Top View

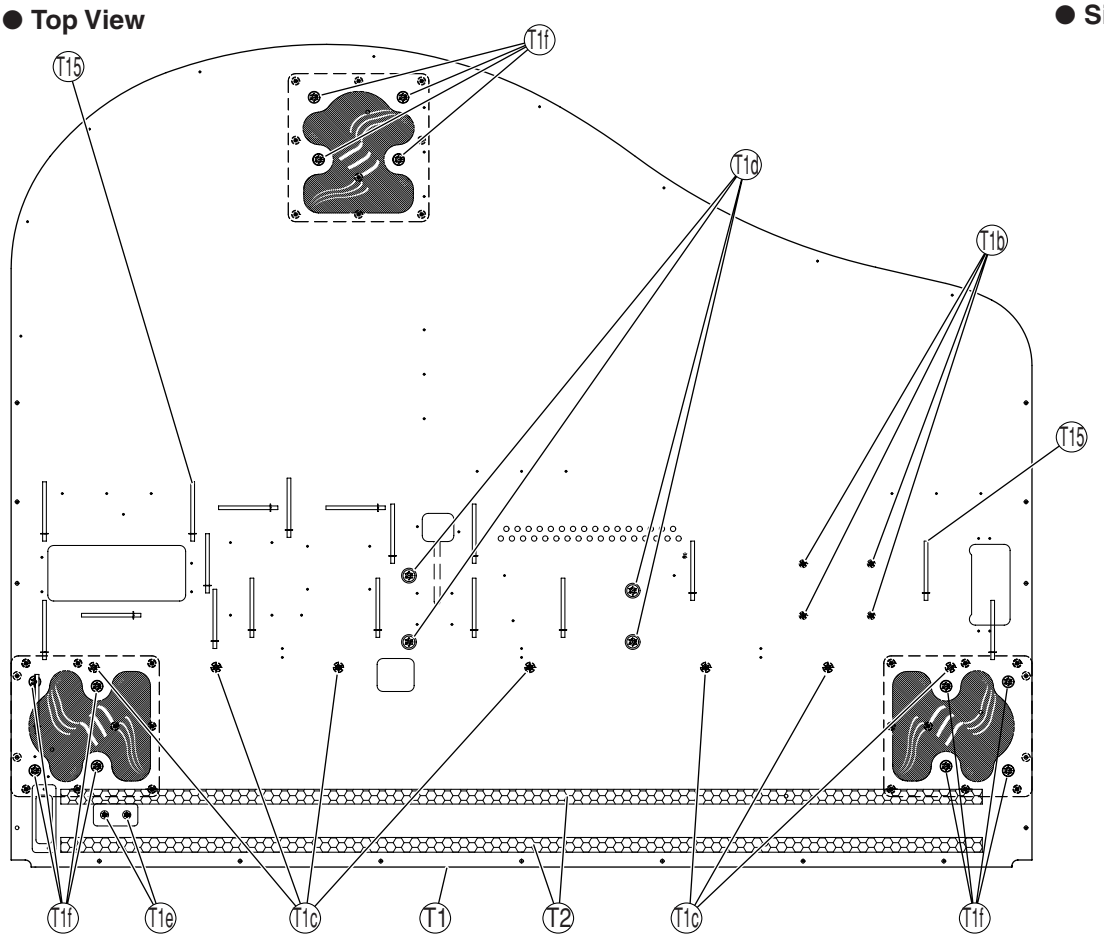

● Side View

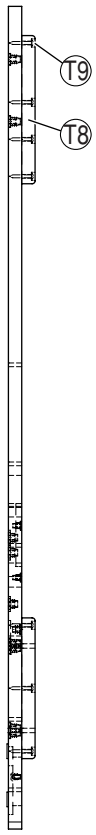

● Front View

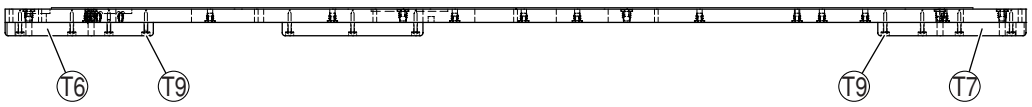

REF NO.	PART NO.	DESCRIPTION		部品名	REMARKS	QTY	RANK
		KEY BED ASSEMBLY		棚板Ａｓｓ’ｙ	CLP-265GP		
	--	Key bed Assembly	CL	棚板集成	(WH35600)		
T1	--	Key bed Assembly		棚板木部集成	(WH36470)		
T1a	--	Key bed		棚板	(WH36490)		
T1b	**WF624100**	Nut	B 4.0X11.5 MFZN2W3	鬼目ナット		4	01
T1c	**WF738300**	Nut	B 5.0X12 MFZN2W3	ナットオニメ		7	
T1d	**WF560900**	Nut	6.0X13.5 I	ナットオニメ		4	01
T1e	**WF561000**	Nut	4.0X12.5 I	ナットオニメ		2	01
T1f	--	Nut	6.0X15.5 B	ナットオニメ	(WF55790)	12	
T2	--	Cushion, GH	GH BLACK	クッションＧＨ	(WJ17450)	2	
T6	--	Column VP (L)	L	桁ＶＰ品（Ｌ）	(WC89790)		
T7	--	Column VP (R)	R	桁ＶＰ品（Ｒ）	(WC89800)		
T8	--	Column VP (B)	B	桁（Ｂ）ＶＰ品	(WC89820)		
T9	--	Truss Head Tapping Screw-1	4.0X30 MFZN2W3	ＴＰ＃１＋ＴＲＵＳ	(WE96580)	25	
T15	**VU891300**	Cord Holder	L80	ビニタイ黒１．０芯Ｌ		19	03

＊: New Parts

RANK : Japan only

■ BACK TOP BOARD ASSEMBLY

● Top View

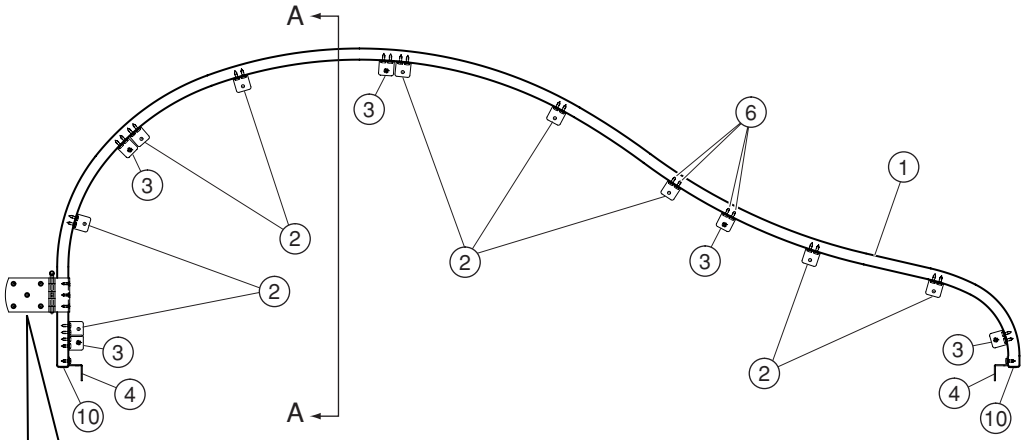

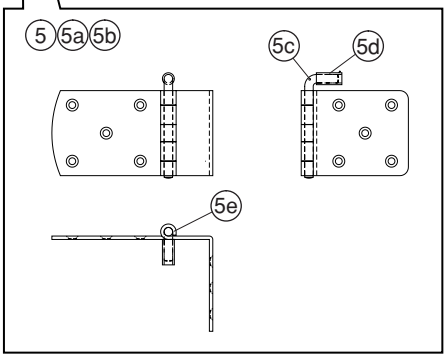

● SEC. A-A

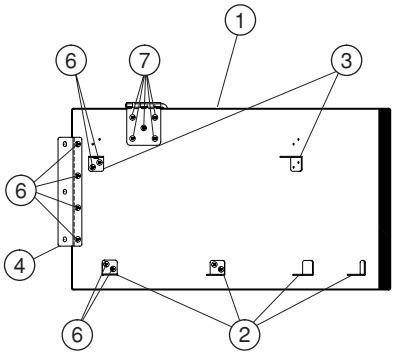

	REF NO.	PART NO.	DESCRIPTION		部品名	REMARKS	QTY	RANK
			BACK TOP BOARD ASSEMBLY		背面框Ａｓｓ’ｙ	CLP-265GP		
*		**WH355800**	Back Top Board Assembly	CL	背面框Ａｓｓ’ｙ			
	1	**--**	Back Top Board		背面框塗装品	(WH36400)		
	2	**V5376000**	Angle Bracket		アングル		9	01
	3	**--**	Holder,Back Top Board B		背面框金具（Ｂ）	(V913990)	5	
	4	**--**	Holder,Back Top Board C		背面框金具（Ｃ）	(V914000)	2	
	5	**V9134800**	Hinge B	B	屋根蝶番（Ｂ）			12
	5a	**--**	Hinge A-1	A-1 BRASS	屋根蝶番（Ａ－１）	(WA03230)		
	5b	**--**	Hinge B-2	B-2 BRASS	屋根蝶番（Ｂ－２）	(WA03250)		
	5c	**WA032600**	Hinge Shaft	SWP-A	蝶番芯棒			05
	5d	**WA032700**	Tube	PVC	チューブ			01
	5e	**--**	Grease	GP-837DE	フロイル	(WF42320)		
	6	**WE970900**	Bind Head Tapping Screw-1	3.5X12 MFZN2W3	ＴＰ＃１＋ＢＩＮＤ		36	01
*	6	**WF831100**	Bind Head Tapping Screw-1	3.5X11 MFZN2W3	ＴＰ＃１＋ＢＩＮＤ		36	
	7	**V6295100**	Oval Head Tapping Screw-1	3.0X14 BS	＋丸皿ＴＰ　１種		5	01
	10	**--**	Nonwoven Fabric Cloth	230X12X0.55	不織布	(WA97310)	2	

＊: New Parts

RANK : Japan only

■ PANEL ASSEMBLY

● Rear View

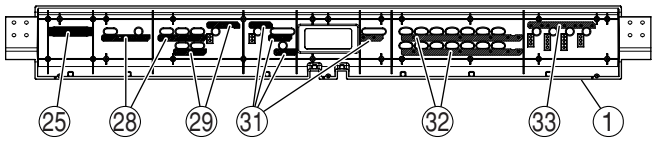

● Rear View

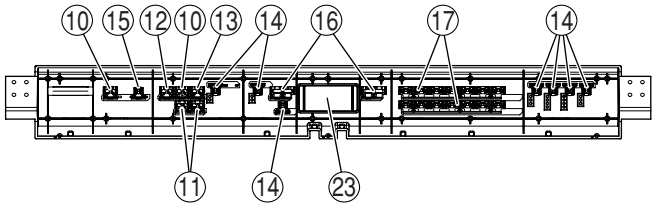

● Rear View

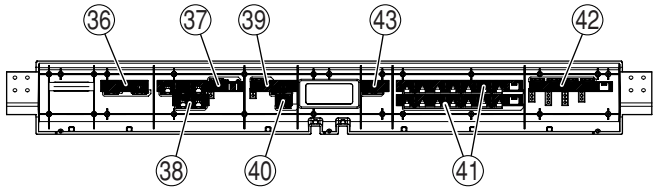

● Rear View

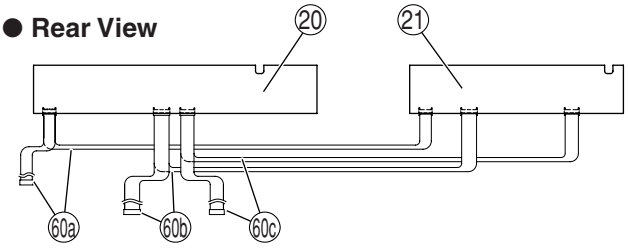

● Rear View

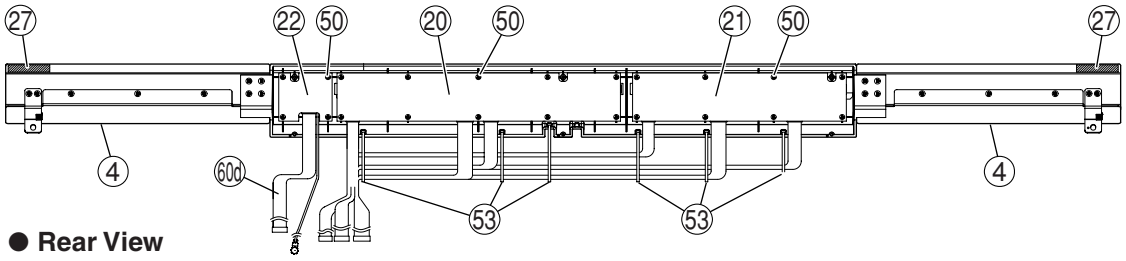

● Rear View

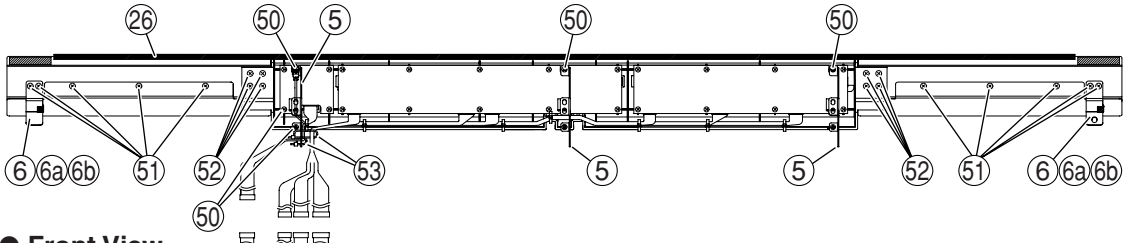

● Front View

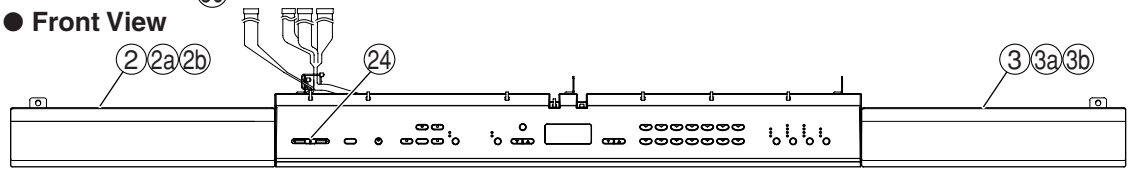

	REF NO.	PART NO.	DESCRIPTION		部品名	REMARKS	QTY	RANK
			PANEL ASSEMBLY		パネルＡｓｓ’ｙ	CLP-265GP		
		--	Panel Assembly	CL	パネルＡｓｓ’ｙ	(WH35670)		
*	1	WH367900	Control Panel		コンパネ印刷品			
*	2	WH438600	Panel (L)	LEFT	パネル集成（Ｌ）			
	2a	--	Panel L		パネルＬ印刷品	(WH36810)		
	2b	--	Dust Proof Cloth	293 12	不織布	(WH43840)		
*	3	WH438700	Panel (R)	RIGHT	パネル集成（Ｒ）			
	3a	--	Panel R		パネルＲ印刷品	(WH36820)		
	3b	--	Dust Proof Cloth	293 12	不織布	(WH43840)		
*	4	WH369600	Grille		グリル塗装品		2	
	5	--	Panel Holder Assembly	CL	パネル固定金具Ａｓｓ’ｙ	(WH98200)	3	
	6	--	Panel Holder Assembly A	A	パネル固定金具ＡＡｓｓｙ	(V907460)	2	
	6a	V8577000	Control Panel Holder A	A	パネル固定金具Ａ			
	6b	V8044200	Felt	27_12_1 BLACK	フェルト			01
	10	V8065100	Button B1	GRAY/DARKGRAY	ボタン（Ｂ）１	DEMO,STOP	2	04
	11	V8065500	Button B1 W/LENS	GRAY/DARKGRAY	ボタン（Ｂ）１レンズ	LEFT,RIGHT	2	05
	12	V8670200	Button B	DULRED	ボタンＢダルレッドレ	REC		01
	13	V8670300	Button B	DULGREEN	ボタンＢダルグリーン	PLAY/PAUSE		01
	14	V8066000	Button D1	D GRAY/DARKGRAY	ボタン（Ｄ）１	METRONOME ON/OFF SONG SELECT,FUNCTION#, BRILLIANCE,REVERB EFFECT,TOUCH	7	04
	15	V8066100	Button D1 W/LENS	D GRAY/DARKGRAY	ボタン（Ｄ）１レンズ	TRANSPOSE		05
	16	V8064900	Button A1	A	ボタン（Ａ）１印刷品	DOWN,UP,-/NO,+/YES	2	05
	17	V8065800	Button C1	C GRAY/DARKGRAY	ボタン（Ｃ）１	GRAND PIANO1,E.PIANO1, GRAND PIANO2,E.PIANO2, HARPSICHORD1,STRINGS1, HARPSICHORD2,STRINGS2, VIBRAPHONE,JAZZ ORGAN, CHURCH ORGAN1,CHOIR, CHURCH ORGAN2,GUITAR	2	06
	20	WE089800	Circuit Board	PNL	ＰＮＬシート			07
	21	WE090000	Circuit Board	PNR	ＰＮＲシート			10
	22	WE090100	Circuit Board	MV	ＭＶシート			04
	23	WE252700	LED Window		ＬＥＤウィンドウ			01
	24	V8085100	Slide Knob		ツマミ（スライド）	MASTER VOLUME		01
	25	V5911300	Dust Proof Cloth	54X10X0.25	防塵クロス			01
	26	VU638700	Felt	MK	フェルト			05
	27	--	Nonwoven Fabric Cloth	10X50X0.55	不織布	(V243310)	2	
	28	--	Nonwoven Fabric Cloth	11	不織布１１	(WE09100)	2	
	29	--	Nonwoven Fabric Cloth	12	不織布１２	(WE09110)	2	
	31	--	Nonwoven Fabric Cloth	13	不織布１３	(WE09120)	4	
	32	--	Nonwoven Fabric Cloth	14	不織布１４	(WE09130)	2	
	33	--	Nonwoven Fabric Cloth	15	不織布１５	(WE09140)		
	36	--	Nonwoven Fabric Cloth	21	不織布２１	(WE09430)		
	37	--	Nonwoven Fabric Cloth	22	不織布２２	(WE09440)		
	38	--	Nonwoven Fabric Cloth	23	不織布２３	(WE09450)		
	39	--	Nonwoven Fabric Cloth	24	不織布２４	(WE09460)		
	40	--	Nonwoven Fabric Cloth	25	不織布２５	(WE09470)		
	41	--	Nonwoven Fabric Cloth	26	不織布２６	(WE09480)	2	
	42	--	Nonwoven Fabric Cloth	27	不織布２７	(WE09490)		
	43	--	Nonwoven Fabric Cloth	H	不織布Ｈ	(V860690)		
	50	WE774300	Bind Head Tapping Screw-B	3.0X8 MFZN2W3	Ｂタイト＋ＢＩＮＤ		28	01
	51	WF745300	Bind Head Tapping Screw-1	3.5X8 MFZN2W3	ＴＰ＃１＋ＢＩＮＤ		10	
	52	WE970800	Bind Head Tapping Screw-1	3.5X10 MFZN2W3	ＴＰ＃１＋ＢＩＮＤ		8	01
	53	CB069250	Cord Holder	BK-1	インシュロックタイ		9	01
	60	--	Connector Assembly	PN	束線構成ＰＮ	(WH48190)		
	60a	--	Connector Assembly	PN7P	ＰＮ７Ｐ束線	(WH84120)		
	60b	--	Connector Assembly	PN9P	ＰＮ９Ｐ束線	(WH84140)		
	60c	--	Connector Assembly	PN8P	ＰＮ８Ｐ束線	(WH84130)		
	60d	V7681300	Connector Assembly	VOL	ＶＯＬ束線			03

＊ : New Parts

RANK : Japan only

■ MUSIC REST ASSEMBLY

● Rear View

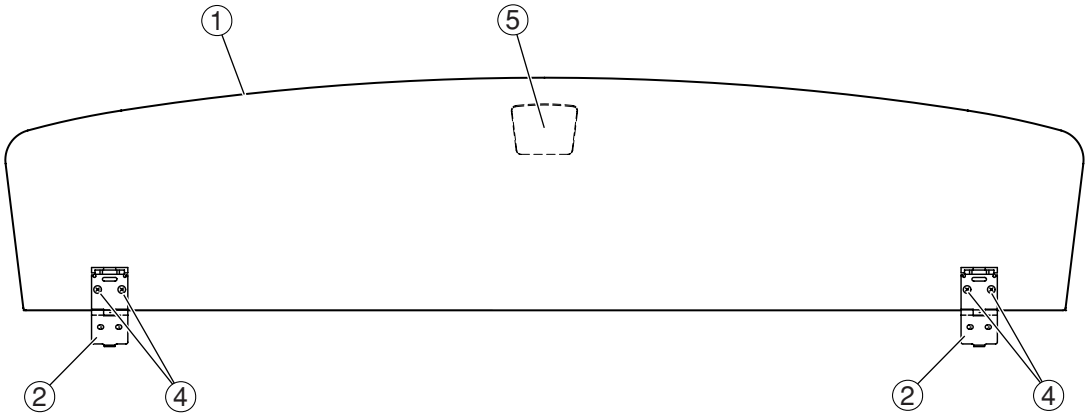

● Side View

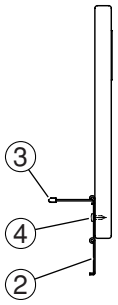

REF NO.	PART NO.	DESCRIPTION		部品名	REMARKS	QTY	RANK
		MUSIC REST ASSEMBLY		譜面板Ａｓｓ’ｙ	CLP-265GP		
*	**WH354600**	Music Rest Assembly	CL	譜面板Ａｓｓ’ｙ			
1	**--**	Music Rest		譜面板塗装品	(WH35810)		
2	**V8437600**	Hinge		譜面蝶番		2	05
3	**VV965900**	Hinge Cap		蝶番キャップ		2	03
4	**WF109400**	Bind Head Tapping Screw-1	3.0X10 MFZN2B3	ＴＰ＃１＋ＢＩＮＤ		4	01
5	**V5782300**	Badge	CLAVINOVA	バッジ（クラビノーバ）			05

＊ : New Parts

RANK : Japan only

■ TOP BOARD ASSEMBLY L

● **Front View**

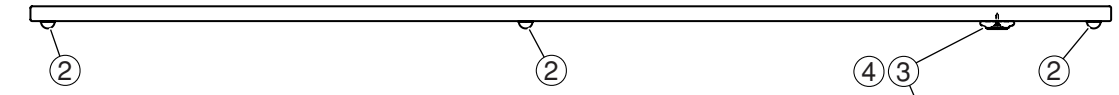

● **Bottom View**

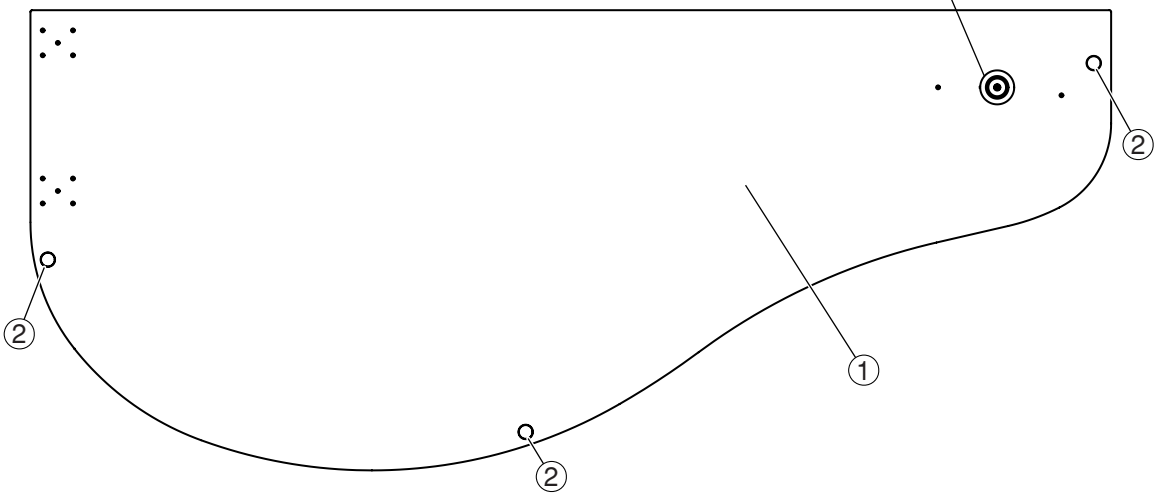

	REF NO.	PART NO.	DESCRIPTION		部品名	REMARKS	QTY	RANK
			TOP BOARD ASSEMBLY (L)		屋根（大）Ａｓｓ’ｙ	CLP-265GP		
*		**WH355100**	Top Board Assembly (L)	LARGE	屋根（大）Ａｓｓ’ｙ			
	1	**--**	Top Board (L)	LARGE	屋根（大）塗装品	(WH36010)		
	2	**VS440000**	Stopper A	SJ-5017	ストッパー　Ａ		3	04
	3	**VV773200**	Recess		屋根受け皿			05
*	4	**WE963900**	Flat Head Tapping Screw-1	3.5X16 MFZN2B3	ＴＰ＃１＋ＦＬＡＴ			

＊: New Parts

RANK : Japan only

■ TOP BOARD ASSEMBLY S

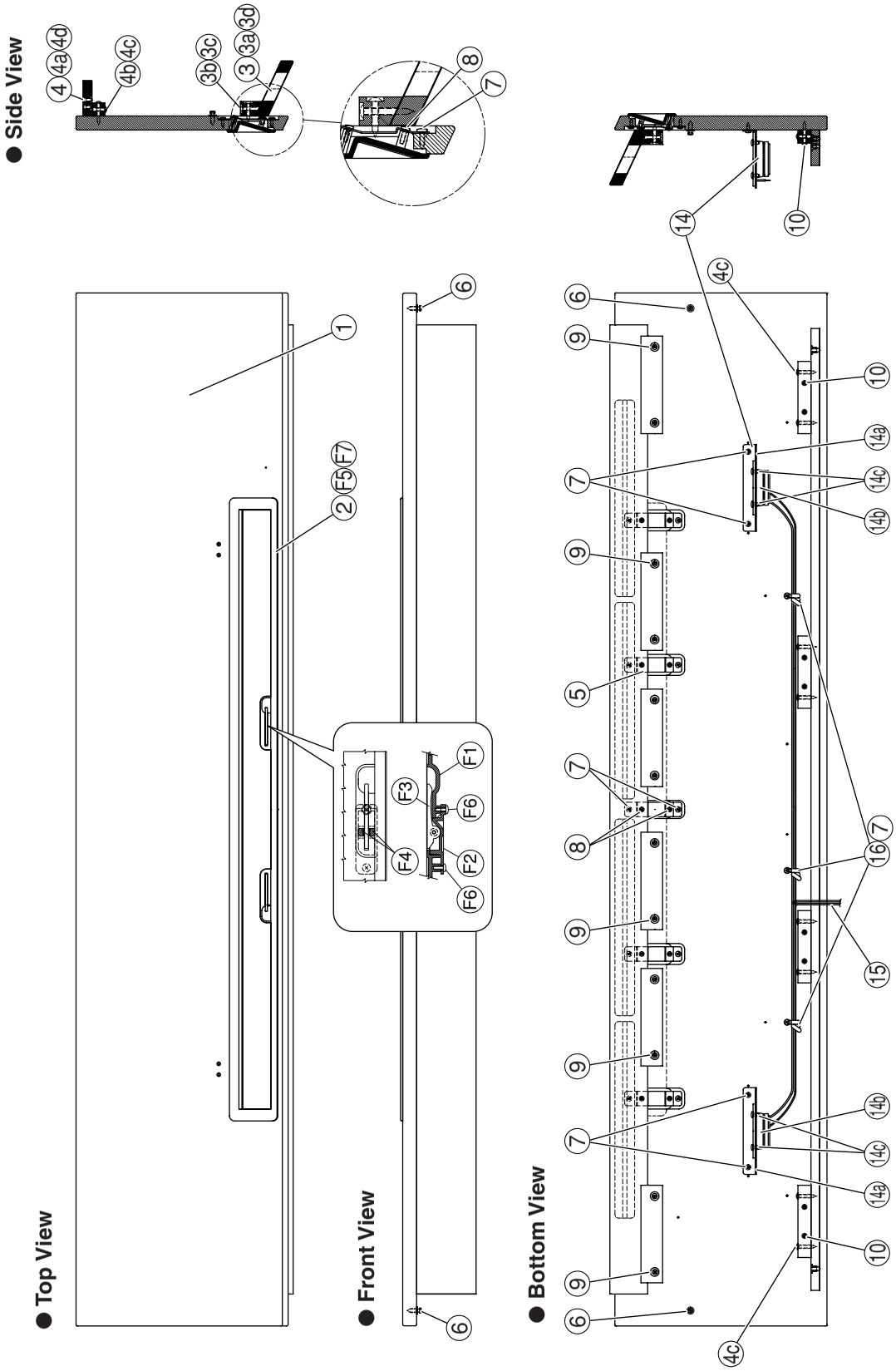

	REF NO.	PART NO.	DESCRIPTION		部品名	REMARKS	QTY	RANK
			TOP BOARD ASSEMBLY (S)		屋根（小）Ａｓｓ’ｙ	CLP-265GP		
		--	Top Board Assembly (S)	SMALL	屋根（小）Ａｓｓ’ｙ	(WH35490)		
*	1	WH358600	Top Board (S)	SMALL	屋根（小）塗装品			
	2	V7082600	Score Support Assembly		譜面台Ａｓｓ’ｙ			23
*	3	WH429100	Top Front Rail Assembly	CL	屋根前付けＡｓｓ’ｙ			
	3a	--	Top Front Grille Assembly		屋根前グリルＡｓｓ’ｙ	(WH42940)		
	3b	--	Crosspiece		桟	(WA84860)	6	
	3c	--	Truss Head Tapping Screw-1	4.0X30 MFZN2W3	ＴＰ＃１＋ＴＲＵＳ	(WE96580)	12	
	3d	--	Shield Board Assembly A		遮蔽板Ａ　Ａｓｓ’ｙ	(WH97730)	4	
	4	--	Top Rear Board Assembly		屋根後板Ａｓｓ’ｙ	(WH35920)		
	4a	--	Top Rear Board		屋根後板加工品	(WH35940)		
	4b	--	Crosspiece		桟	(WH35980)	4	
	4c	WE970200	Truss Head Tapping Screw-1	3.5X25 MFZN2W3	ＴＰ＃１＋ＴＲＵＳ		8	01
	4d	WF624100	Nut	B 4.0X11.5 MFZN2W3	鬼目ナット		2	01
	5	V7508600	Angle Bracket	CL	譜面台金具		5	01
	6	WF856700	Strap Screw		ショルダースクリュー		2	01
	7	WE970900	Bind Head Tapping Screw-1	3.5X12 MFZN2W3	ＴＰ＃１＋ＢＩＮＤ		17	01
*	7	WF831100	Bind Head Tapping Screw-1	3.5X11 MFZN2W3	ＴＰ＃１＋ＢＩＮＤ		17	
	8	WE774200	Bind Head Tapping Screw-B	3.0X10 MFZN2W3	Ｂタイト＋ＢＩＮＤ		10	01
*	9	WF742200	Truss Head Tapping Screw-1	4.0X25 MFZN2W3	ＴＰ＃１＋ＴＲＵＳ		12	01
	10	WE979900	Truss Head Tapping Screw-1	3.5X30 MFZN2W3	ＴＰ＃１＋ＴＲＵＳ		8	01
	14	--	Speaker Assembly		スピーカＡｓｓ’ｙ	(WH35990)	2	
	14a	--	Speaker Holder		スピーカ金具	(WH36000)		
	14b	XL455A00	Speaker(Tweeter)	5.0cm 16ohm 60W	スピーカ			07
	14c	WE974600	Bind Head Tapping Screw-B	4.0X8 MFZN2W3	Ｂタイト＋ＢＩＮＤ		4	01
	15	--	Connector Assembly	TW	ＴＷ束線	(WH48810)		
	16	CB817510	Cord Binder	S-14B-E,S-14	束線止め		3	03
		V7082600	Score Support Assembly		譜面台Ａｓｓ’ｙ			23
	F1	--	Score Support		譜面台塗装品	(V756670)		
	F2	V7113200	Case (A),Music Stopper	A	譜面押えケースＡ		2	01
	F3	V7113700	Music Stopper Assembly	BRASS	譜面押さえ集成		2	04
	F4	V7113400	Bushing		ブッシュ		4	09
	F5	--	Skin	0.5XT0.5	人工皮革	(V711450)		
	F6	WE774300	Bind Head Tapping Screw-B	3.0X8 MFZN2W3	Ｂタイト＋ＢＩＮＤ		4	01
	F7	--	Nonwoven Fabric Cloth	415X5X0.25	不織布	(WB16870)	2	

＊: New Parts

RANK : Japan only

■ ARM ASSEMBLY L

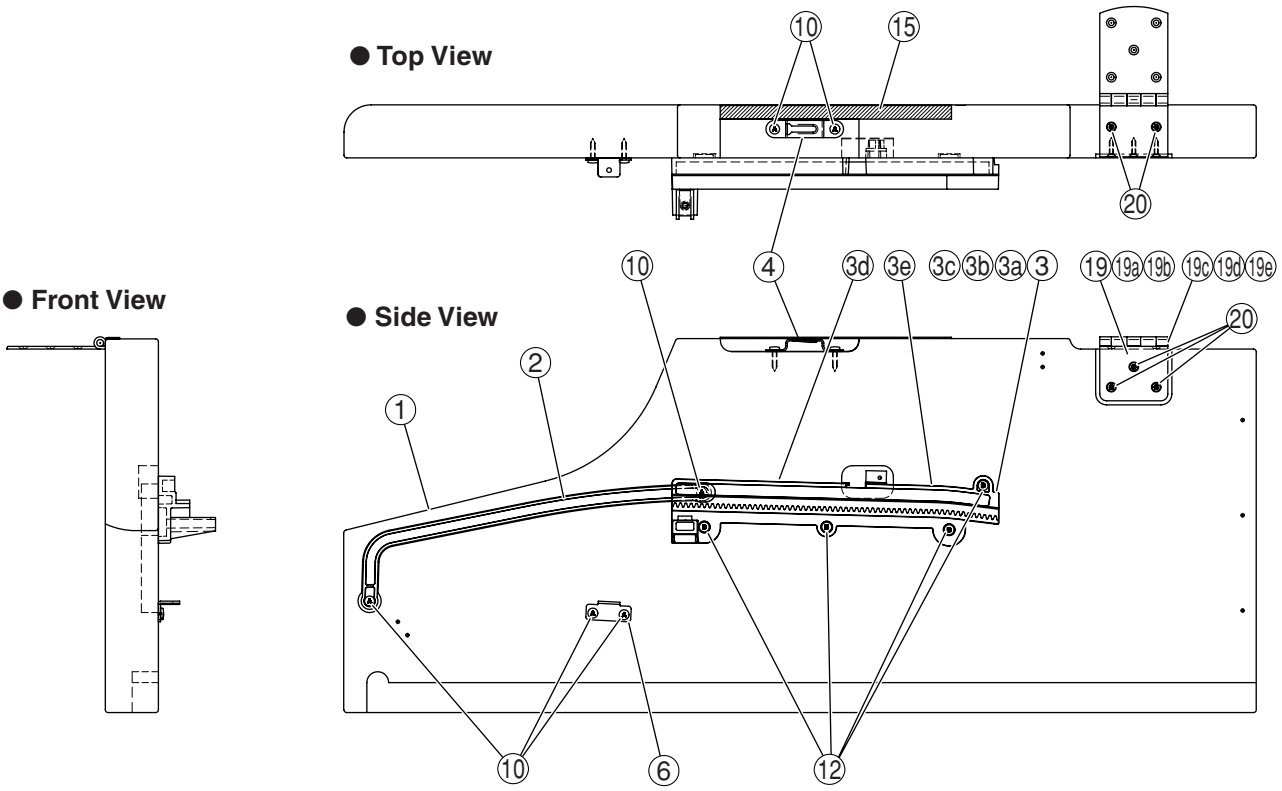

REF NO.	PART NO.	DESCRIPTION		部品名	REMARKS	QTY	RANK
		ARM ASSEMBLY L		腕木Ａｓｓ’ｙ（Ｌ）	CLP-265GP		
*	**WH355300**	Arm Assembly L	LEFT	腕木Ａｓｓ’ｙ（Ｌ）			
1	**--**	Side Cover L	LEFT	腕木（Ｌ）塗装品	(WH36070)		
2	**--**	Guide Rail L	LEFT	ガイドレールＬ	(V494910)		
3	**WJ496200**	Rack Assembly L	LEFT	ラックＡｓｓ’ｙ Ｌ			
3a	**--**	Rack L	LEFT	ラック成形品 Ｌ	(V844920)		
3b	**--**	Felt	8.5X6.0X2 JIS2	フェルト	(VP47880)	2	
3c	**VV435100**	Speed Nut	WUSN-4044	スピードナット			01
3d	**--**	Nonwoven Fabric Cloth	120X5X0.25	不織布	(WJ49600)		
3e	**--**	Nonwoven Fabric Cloth	65X5X0.25	不織布	(WJ49610)		
4	**WA218300**	Holder, Top Board	1.20	屋根固定金具			01
6	**--**	Angle, KBL	KBL	ＫＢＬアングル	(WC08550)		
10	**WE970700**	Bind Head Tapping Screw-1	3.5X16 MFZN2W3	ＴＰ＃１＋ＢＩＮＤ		6	01
12	**WE971500**	Bind Head Tapping Screw-1	3.5X20 MFZN2W3	ＴＰ＃１＋ＢＩＮＤ		4	01
15	**--**	Felt	0X1	フェルト	(V938150)		
19	**V9134700**	Hinge A	A	屋根蝶番（Ａ）			12
19a	**--**	Hinge A-1	A-1 BRASS	屋根蝶番（Ａ－１）	(WA03230)		
19b	**--**	Hinge B-1	B-1 BRASS	屋根蝶番（Ｂ－１）	(WA03240)		
19c	**WA032600**	Hinge Shaft	SWP-A	蝶番芯棒			05
19d	**WA032700**	Tube	PVC	チューブ			01
19e	**--**	Grease	GP-837DE	フロイル	(WF42320)		
20	**V6295100**	Oval Head Tapping Screw-1	3.0X14 BS	＋丸皿ＴＰ １種		5	01

＊: New Parts

RANK : Japan only

■ ARM ASSEMBLY R

● Top View

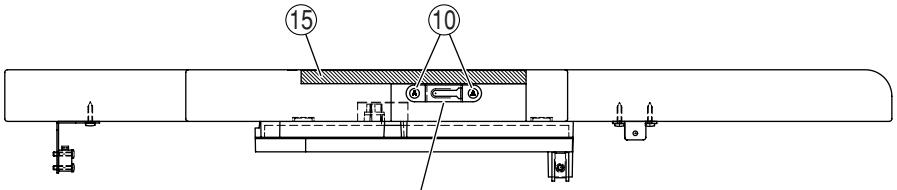

● Side View

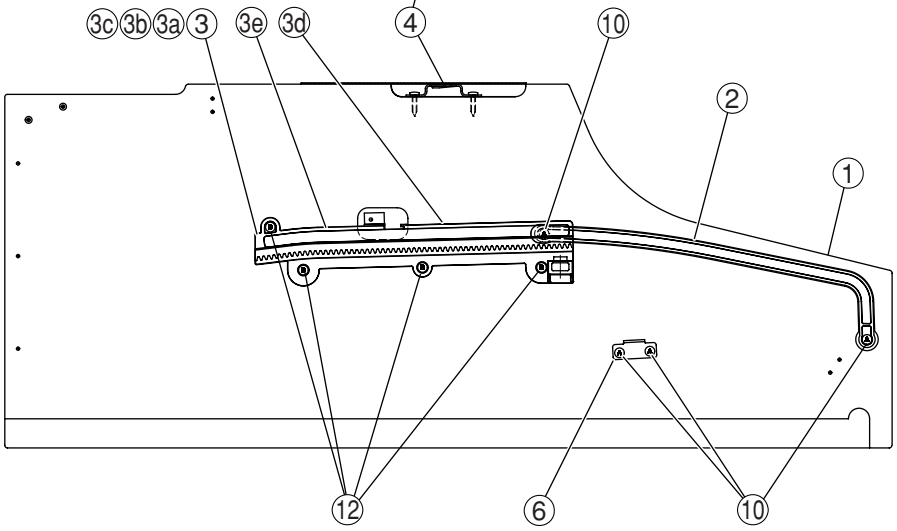

● Front View

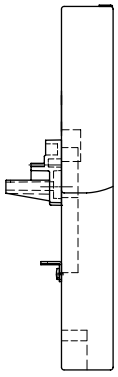

REF NO.	PART NO.	DESCRIPTION		部品名	REMARKS	QTY	RANK
		ARM ASSEMBLY R		腕木Ａｓｓ’ｙ（Ｒ）	CLP-265GP		
*	**WH355400**	Arm Assembly R	RIGHT	腕木Ａｓｓ’ｙ（Ｒ）			
1	**--**	Side Cover R	RIGHT	腕木（Ｒ）塗装品	(WH36080)		
2	**--**	Guide Rail R	RIGHT	ガイドレールＲ	(V494930)		
3	**WJ496300**	Rack Assembly R	RIGHT	ラックＡｓｓ’ｙ Ｒ			
3a	**--**	Rack R	RIGHT	ラック成形品 Ｒ	(V844930)		
3b	**--**	Felt	8.5X6.0X2 JIS2	フェルト	(VP47880)	2	
3c	**VV435100**	Speed Nut	WUSN-4044	スピードナット			01
3d	**--**	Nonwoven Fabric Cloth	120X5X0.25	不織布	(WJ49600)		
3e	**--**	Nonwoven Fabric Cloth	65X5X0.25	不織布	(WJ49610)		
4	**WA218300**	Holder, Top Board	1.20	屋根固定金具			01
6	**--**	Angle, KBL	KBL	ＫＢＬアングル	(WC08550)		
10	**WE970700**	Bind Head Tapping Screw-1	3.5X16 MFZN2W3	ＴＰ＃１＋ＢＩＮＤ		6	01
12	**WE971500**	Bind Head Tapping Screw-1	3.5X20 MFZN2W3	ＴＰ＃１＋ＢＩＮＤ		4	01
15	**--**	Felt	0X1	フェルト	(V938150)		

* : New Parts

RANK : Japan only

■ END BLOCK ASSEMBLY (L, R)

● END BLOCK ASSEMBLY L

● Side View

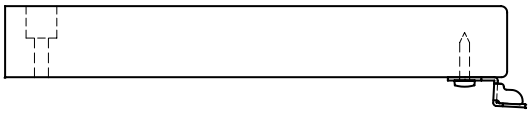

● Bottom View

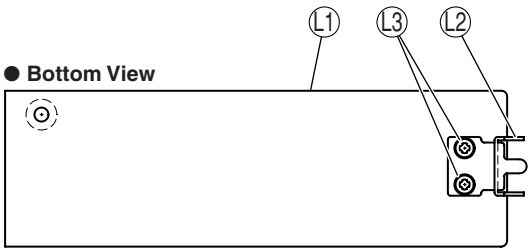

● END BLOCK ASSEMBLY R

● Top View

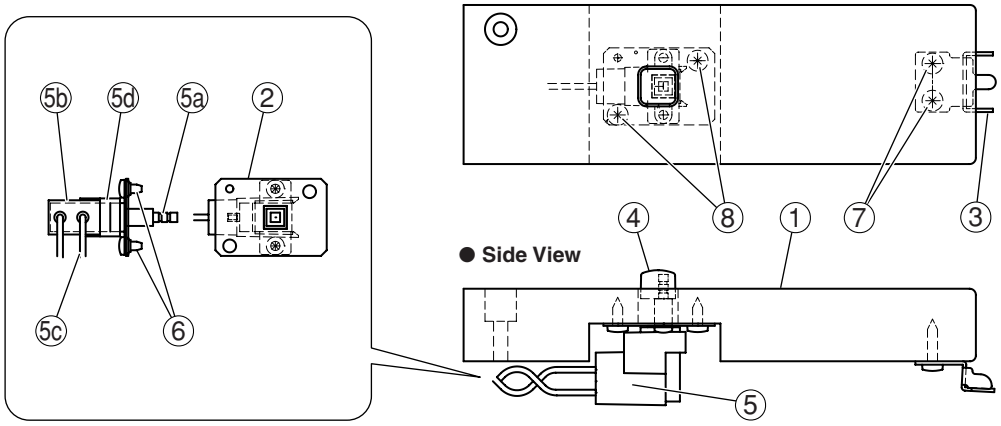

● Side View

	REF NO.	PART NO.	DESCRIPTION		部品名	REMARKS	QTY	RANK
			END BLOCK ASSEMBLY L		拍子木Ａｓｓ’ｙ（Ｌ）	CLP-265GP		
*		**WH356300**	End Block Assembly L	LEFT	拍子木Ａｓｓ’ｙ（Ｌ）			
	L1	**--**	End Block L	LEFT	拍子木（Ｌ）塗装品	(WH36550)		
	L2	**V5335500**	Angle, H	H	アングル H			03
	L3	**WE970700**	Bind Head Tapping Screw-1	3.5X16 MFZN2W3	ＴＰ＃１＋ＢＩＮＤ		2	01
			END BLOCK ASSEMBLY R		拍子木Ａｓｓ’ｙ（Ｒ）	CLP-265GP		
		--	End Block Assembly R	RIGHT	拍子木Ａｓｓ’ｙ（Ｒ）	(WH35640)		
*	1	**WH365600**	End Block R	RIGHT	拍子木（Ｒ）塗装品			
	2	**--**	Power Switch Angle	PSW	アングル ＰＳＷ	(WD18440)		
	3	**V5335500**	Angle, H	H	アングル H			03
	4	**VF663400**	Push Knob	BLACK	プッシュツマミ			02
	5	**WE207100**	Power Switch Assembly	PSW	ＰＳＷ束線			05
⚠	5a	**VC843500**	Push Switch	SDDLB13102 J.U.C.S	プッシュＳＷ	POWER		03
	5b	**V5800800**	Switch Cover	IVORY,BLACK	パワースイッチカバー			01
	5c	**CB069250**	Cord Holder	BK-1	インシュロックタイ	}	2	01
	5c	**VV558400**	Cord Binder	AZ-100	結束バンド	}	2	01
	5d	**--**	Cushion	36 26	クッション（ＰＵＲ）	(V889590)		
	6	**WE936300**	Bind Head Tapping Screw-B	3.0X6 MFZN2W3	Ｂタイト＋ＢＩＮＤ		2	01
	7	**WE970700**	Bind Head Tapping Screw-1	3.5X16 MFZN2W3	ＴＰ＃１＋ＢＩＮＤ		2	01
	8	**WE970800**	Bind Head Tapping Screw-1	3.5X10 MFZN2W3	ＴＰ＃１＋ＢＩＮＤ		2	01

＊: New Parts

RANK : Japan only

■ KEY COVER ASSEMBLY

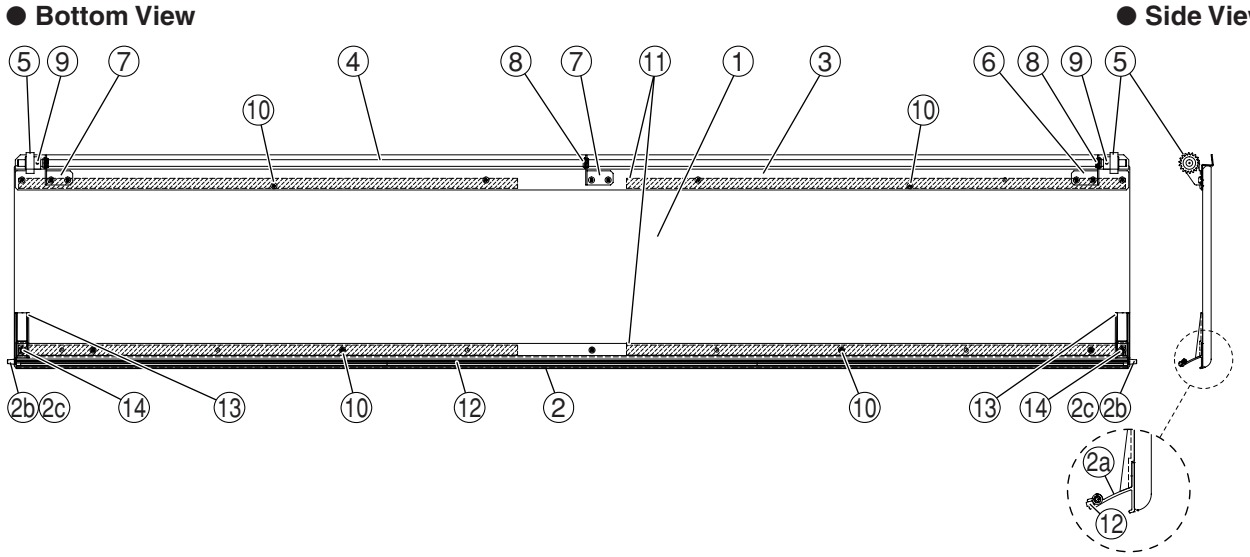

REF NO.	PART NO.	DESCRIPTION		部品名	REMARKS	QTY	RANK
		KEY COVER ASSEMBLY		スライド蓋Ａｓｓ’ｙ	CLP-265GP		
*	**WH356500**	Key Cover Assembly	CL	スライド蓋Ａｓｓ’ｙ			
1	**--**	Key Cover		スライド蓋塗装品	(WH36610)		
2	**WA687700**	Sash F Assembly		サッシＦ　Ａｓｓ’ｙ			09
2a	**--**	Sash F		サッシＦ	(WA68780)		
2b	**WF875600**	Guide Pin	3.0X12 TP #B	ガイドピン		2	01
2c	**--**	Spacer		スペーサー	(V549580)	2	
3	**--**	Sash R		サッシＲ	(WA68040)		
4	**--**	Rod		連動棒	(WA68830)		
5	**V9857900**	Gear	M90S	ピニオンギヤ		2	01
6	**VV285600**	Holder L, Rod	LEFT	連動棒支持金具Ｌ			03
7	**VV285700**	Holder R, Rod	RIGHT	連動棒支持金具Ｒ		2	03
8	**VS368500**	Bushing		ブッシュ		3	03
9	**WE952900**	Bind Head Screw	3.0X10 MFZN2W3	小ネジ＋ＢＩＮＤ		2	01
10	**WF745300**	Bind Head Tapping Screw-1	3.5X8 MFZN2W3	ＴＰ＃１＋ＢＩＮＤ		17	
11	**--**	Adhesive Tape	#500 600X12	両面粘着テープ	(VO02370)	4	
12	**--**	Cushion	2X2.5XT4	サッシクッション	(WA80650)	3	
13	**V5902900**	Block	BLACK	ブロック		2	02
14	**WE970800**	Bind Head Tapping Screw-1	3.5X10 MFZN2W3	ＴＰ＃１＋ＢＩＮＤ		2	01

＊: New Parts

RANK : Japan only

■ FRONT RAIL ASSEMBLY

● Rear View

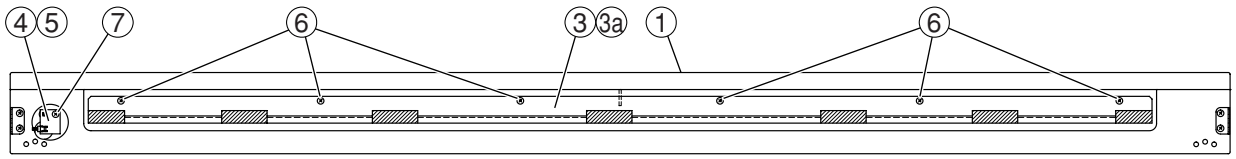

● Top View

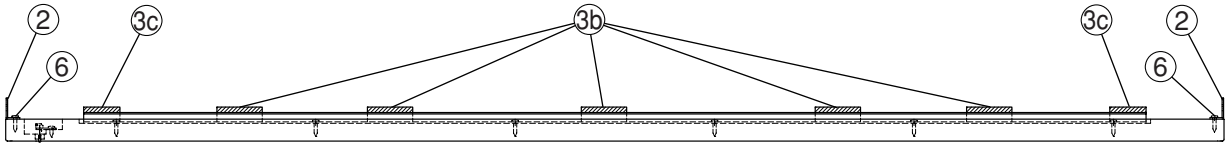

	REF NO.	PART NO.	DESCRIPTION		部品名	REMARKS	QTY	RANK
			FRONT RAIL ASSEMBLY		口棒Ａｓｓ’ｙ	CLP-265GP		
		--	Front Rail Assembly	CL	口棒Ａｓｓ’ｙ	(WH35570)		
*	1	WH363400	Front Rail		口棒塗装品			
	2	V5263500	Angle, K	K	アングルＫ		2	01
	3	--	Holder Assembly, Keyboard	CL	鍵盤前金具Ａｓｓ’ｙ	(WF08480)		
*	3a	WF084900	Holder, Keyboard		鍵盤前金具			
	3b	V4021000	Keyboard Cushion L	LE-20 T6X50X18	鍵盤クッションＬ		5	
	3c	V4021100	Keyboard Cushion S	T6X40X18	鍵盤クッションＳ		2	
	4	VN637600	Circuit Board	PL	ＰＬシート			03
	4	VU659100	Circuit Board	PL	ＰＬシート			03
	5	--	Connector Assembly	PH 2P-200	ＰＨ束線	(WE30020)		
	5	--	Connector Assembly	PH 2P-200	ＰＨ束線	(WD30020)		
	6	WE970700	Bind Head Tapping Screw-1	3.5X16 MFZN2W3	ＴＰ＃１＋ＢＩＮＤ		10	01
	7	WE970800	Bind ad Tapping Screw-1	3.5X10 MFZN2W3	ＴＰ＃１＋ＢＩＮＤ			01

＊: New Parts

RANK : Japan only

■ HP JACK ASSEMBLY

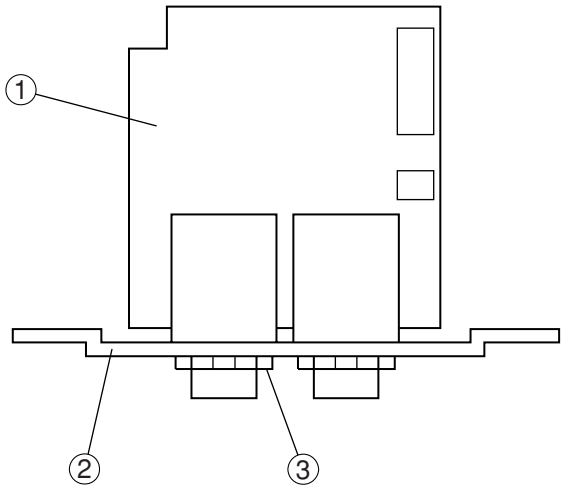

REF NO.	PART NO.	DESCRIPTION		部品名	REMARKS	QTY	RANK
		HP JACK ASSEMBLY		ＨＰジャックＡｓｓ’ｙ	CLP-265GP		
	--	HP Jack Assembly		ＨＰジャックＡｓｓ’ｙ	(WC04600)		05
1	**WC045900**	Circuit Board	HP	Ｈ　Ｐ　シ　ー　ト			04
2	**VN631800**	Angle, Headphone		Ｈ．Ｐ取付金具			01
3	**WF559900**	Special Nut	M12X14X2 P=1.0	ナ　ッ　ト　特　殊		2	

∗ : New Parts

RANK : Japan only

■ JACK ASSEMBLY

● Bottom View

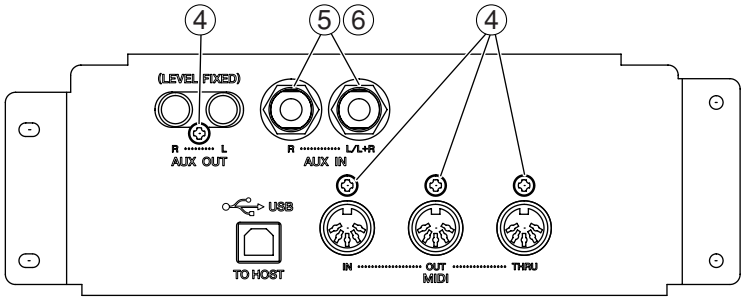

● Rear View

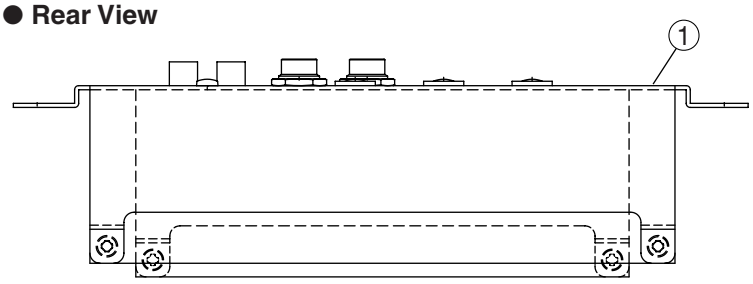

● Side View

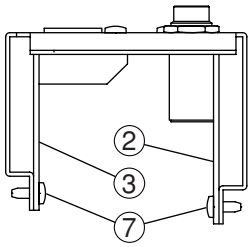

REF NO.	PART NO.	DESCRIPTION		部品名	REMARKS	QTY	RANK
		JACK ASSEMBLY		ジャックAss'y	CLP-265GP		
	--	Jack Assembly	CL	ジャックAss'y	(WH35790)		
* 1	**WH375700**	Plate		ジャック金具印刷品			09
2	**WE490700**	Circuit Board	AJACK	AJACKシート			08
3	**WE005500**	Circuit Board	DJACK	DJACKシート			01
4	**WE774300**	Bind Head Tapping Screw-B	3.0X8 MFZN2W3	Bタイト+BIND		4	02
5	**VJ869400**	Washer	BLACK	ワッシャー		2	01
6	**WF559900**	Special Nut	M12X14X2 P=1.0	ナット 特殊		2	01
7	**WE774300**	Bind Head Tapping Screw-B	3.0X8 MFZN2W3	Bタイト+BIND		4	

＊: New Parts

RANK : Japan only

■ MA80S ASSEMBLY

● Top View

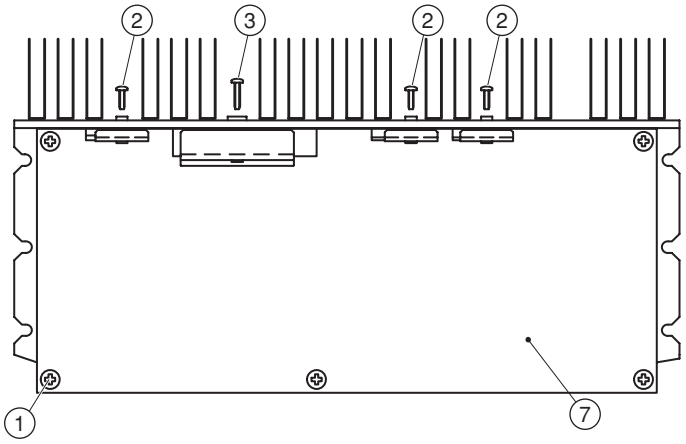

● Front View

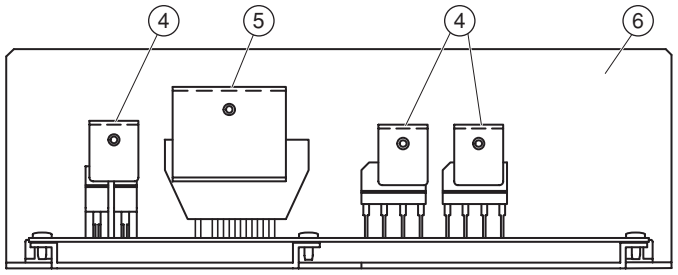

REF NO.	PART NO.	DESCRIPTION		部品名	REMARKS	QTY	RANK
		MA80S ASSEMBLY		ＭＡ８０Ｓ Ａｓｓ’ｙ	CLP-265GP		17
	WC028900	MA80S Assembly	J,U	ＭＡ８０Ｓ Ａｓｓ’ｙ	U		17
	WC029000	MA80S Assembly	E,N	ＭＡ８０Ｓ Ａｓｓ’ｙ	E,B,N,K		01
1	**WE974600**	Bind Head Tapping Screw-B	4.0X8 MFZN2W3	Ｂタイト＋ＢＩＮＤ		5	01
2	**WE774200**	Bind Head Tapping Screw-B	3.0X10 MFZN2W3	Ｂタイト＋ＢＩＮＤ		3	01
3	**WE973400**	Bind Head Tapping Screw-B	3.0X16 MFZN2W3	Ｂタイト＋ＢＩＮＤ			03
4	**VT461100**	Holder,Transistor		トランジスターホルダ		3	03
5	**VT461200**	Holder,Transistor		トランジスターホルダ			
6	**--**	Heat Sink		放熱器	(V761610)		
7	**--**	Circuit Board	MA80S J,U	ＭＡ８０Ｓシート	U (WB55500)		
7	**--**	Circuit Board	MA80S E,N	ＭＡ８０Ｓシート	E,B,N,K (WC03050)		

＊: New Parts

RANK : Japan only

■ FU60 ASSEMBLY

● Front View

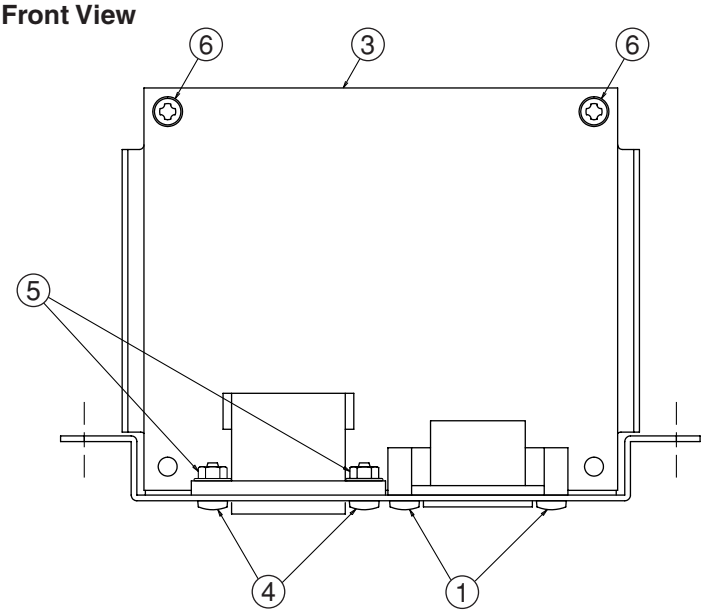

● Top View

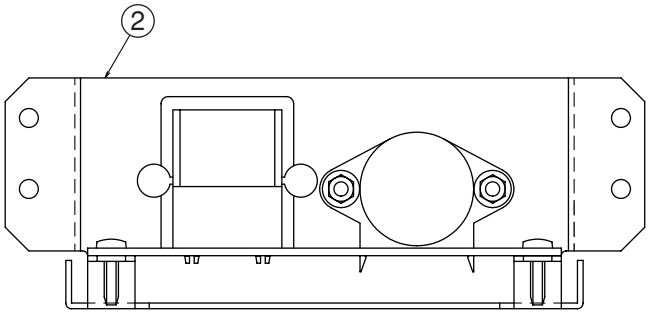

	REF NO.	PART NO.	DESCRIPTION		部品名	REMARKS	QTY	RANK
			FU60 ASSEMBLY		ＦＵ６０　Ａｓｓ’ｙ	CLP-265GP		
		VT152100	FU60 Assembly	FU60 U	ＦＵ６０　Ａｓｓ’ｙ	U		10
		VT152200	FU60 Assembly	FU60 E,GBR	ＦＵ６０　Ａｓｓ’ｙ	E,B,K		10
		VT153300	FU60 Assembly	FU60 73 N	ＦＵ６０　Ａｓｓ’ｙ	N		12
	1	**WE774400**	Bind Head Tapping Screw-B	3.0X8 MFZN2B3	Ｂタイト＋ＢＩＮＤ		2	01
	2	**WB449600**	Plate Assembly, AC	AC J/U/E	ＡＣ金具集成	U,E,B,K		05
	2	**WB449700**	Plate Assembly, AC	AC N	ＡＣ金具集成	N		
	3	**VT151500**	Circuit Board	FU60 U	ＦＵ６０シート	U		07
	3	**VT151600**	Circuit Board	FU60 E,GBR	ＦＵ６０シート	E,B,K		07
	3	**VT152900**	Circuit Board	FU60 73 N	ＦＵ６０シート	N		09
*	4	**WF304400**	Bind Head Screw	3.0X10 MFZN2B3	小ネジ＋ＢＩＮＤ	N	2	
	5	**WF559800**	Hexagonal Nut	M3	ナット　６角フランジ	N	2	01
	6	**WE987400**	Bind Head Tapping Screw-B	3.0X12 MFZN2W3	Ｂタイト＋ＢＩＮＤ		2	01

＊ : New Parts

RANK : Japan only

■ PEDAL BOX UNIT

● Front View

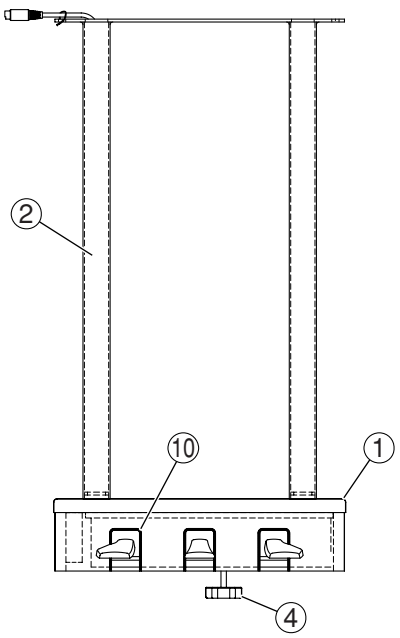

● Side View

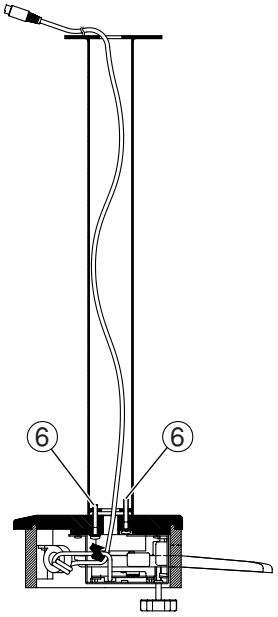

● Top View

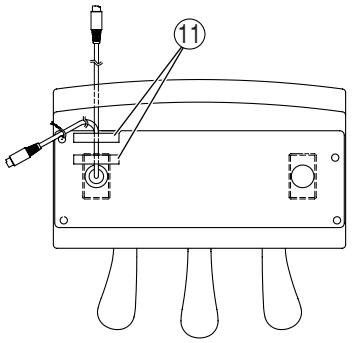

● Bottom View

Pedal assembly: See page 28.

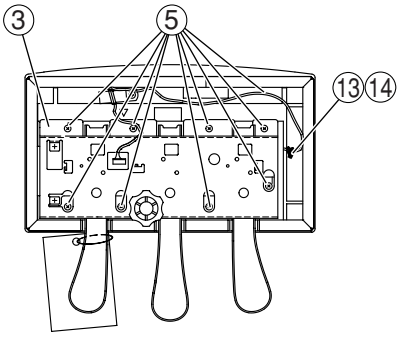

	REF NO.	PART NO.	DESCRIPTION		部品名	REMARKS	QTY	RANK
			PEDAL BOX UNIT		ペダルボックスユニット	CLP-265GP		
		--	Pedal Box Unit	CL	ペダルボックスAss'y	(WH35070)		
*	1	WH696500	Pedal Box Assembly		ペダルボックス集成			
	2	WC367700	Pedal Leg		ペダル柱塗装品			20
*	2	WH497100	Pedal Leg		ペダル柱塗装品			
*	3	WH497300	Pedal Assembly (W)	W	ペダルAss'y(W)			
	4	WF054500	Custom Designed Screw	40XM6X46 MFZN2B3	特注ネジ			
	5	WE971900	Bind Head Tapping Screw-1	4.0X14 MFZN2W3	TP#1+BIND		9	01
*	6	WH500800	Bind Head Screw	SP 5.0X35 MFZN2W3	小ネジ+BIND		4	
	10	V7198000	Felt	125X12X2 RED	フェルト		3	01
	11	VP834600	Adhesive Tape	12X50	粘着テープ		2	05
	13	WE970700	Bind Head Tapping Screw-1	3.5X16 MFZN2W3	TP#1+BIND			01
	14	CB817510	Cord Binder	S-14B-E,S-14	束線止め			03

* : New Parts

RANK : Japan only

■ PEDAL ASSEMBLY

● Top View

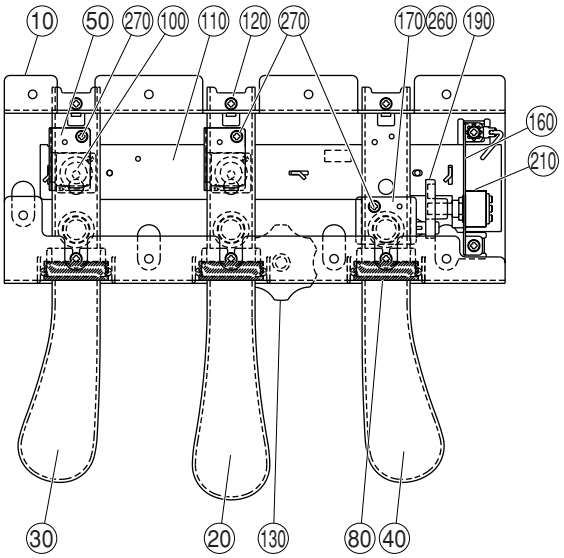

● Side View

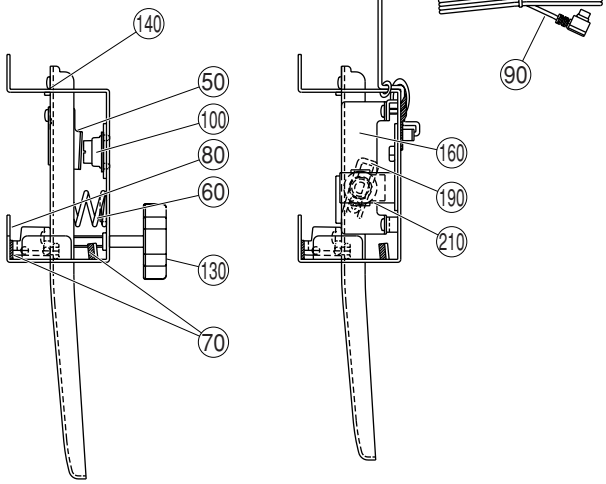

REF NO.	PART NO.	DESCRIPTION		部品名	REMARKS	QTY	RANK
		PEDAL ASSEMBLY		ペダルAss'y	CLP-265GP		
*	**WH497300**	Pedal Assembly (W)	W	ペダルAss'y（W）			
10	**VU339700**	Pedal Frame	CLP158X	ペダルフレーム			09
20	**VU362000**	Pedal Piece	CENTER	ペダル本体セット（C）			08
30	**VU362100**	Pedal Piece	LEFT	ペダル本体セット（L）			08
40	**VU362200**	Pedal Piece	RIGHT	ペダル本体セット（R）			08
50	**VV433500**	Actuator	PEDAL	アクチュエータ		2	03
60	**VP348100**	Pedal Spring	24	ペダルバネ		3	03
70	**VU346500**	Felt PA	PA BLACK	フェルトPA		6	03
80	**VU339800**	Shutter	CLP158X	シャッター		3	03
90	**V9560500**	Connector Assembly	PL-LF	PK－LFケーブル			07
100	**VU456000**	Rubber Contact	PEDAL	接点ゴムドーム		2	03
110	**WB970400**	Circuit Board	PEDAL	ペダルシート			08
120	**WE774300**	Bind Head Tapping Screw-B	3.0X8 MFZN2W3	Bタイト＋BIND		8	01
130	**WF054500**	Custom Designed Screw	40XM6X46 MFZN2B3	特注ネジ			
140	**VE968500**	Grease	G-31KA	グリス			38
160	**VU455600**	Holder, VR	PEDAL	可変抵抗取付金具			03
170	**VV475800**	Boss	PEDAL	VRボス			03
190	**VV476000**	Volume Actuator	PEDAL	VRアクチュエータ			03
210	**WB970500**	Circuit Board	PEDAL VR	ペダルVRシート			07
260	**WA151300**	Spacer	PC 0.5T	スペーサー			
260	**WB191700**	Spacer	PVC 0.2T	スペーサー			01
260	**V9836700**	Spacer	1T	スペーサー			01
260	**V9851400**	Spacer	0.5T	スペーサー			01
270	**WE774200**	Bind Head Tapping Screw-B	3.0X10 MFZN2W3	Bタイト＋BIND		3	01
270	**WE774300**	Bind Head Tapping Screw-B	3.0X8 MFZN2W3	Bタイト＋BIND		3	01

＊: New Parts

RANK : Japan only

■ BENCH(BC-100PE)

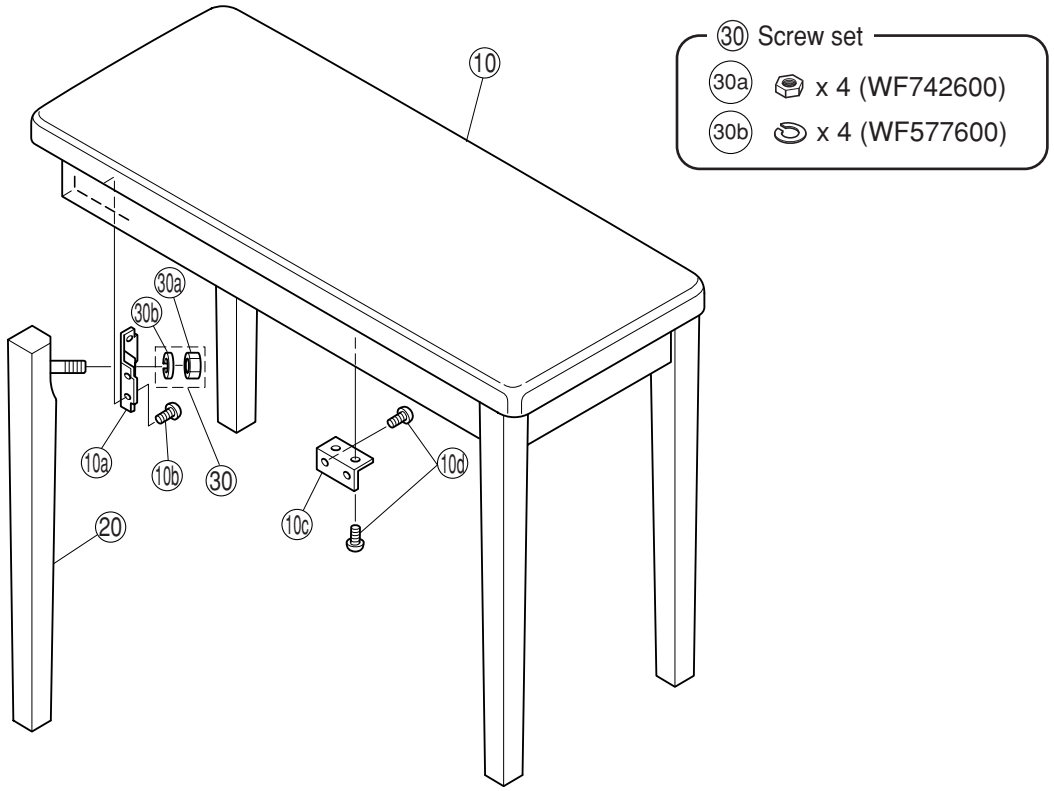

REF NO.	PART NO.	DESCRIPTION		部品名	REMARKS	QTY	RANK
		BENCH		椅子	CLP-265GP		
	WG479600	Bench	BC-100PE U/N/K	同梱品セット椅子			19
	--	Bench	BC-100PE	椅子集成	(WG47970)		
10	**WG479800**	Bench Board Assembly	BC-100PE	座板Ａｓｓ’ｙ			
10a	**AA016480**	Holder, Leg		脚取付隅金具		4	02
10b	**WE970700**	Bind Head Tapping Screw-1	3.5X16 MFZN2W3	ＴＰ＃１＋ＢＩＮＤ		16	01
10c	**VC969300**	Holder, Bench Board		座板固定金具		4	03
10d	**WE954600**	Bind Head Tapping Screw-1	3.5X14 MFZN2W3	ＴＰ＃１＋ＢＩＮＤ		16	01
20	**WG480700**	Leg	BC-100PE	脚柱集成		4	
30	**VS530500**	Screw Set	BC-XX	ネジセットＡｓｓ’ｙ			03
30a	**WF742600**	Hexagonal Nut	M10 #1	ナット６角		4	01
30b	**WF577600**	Spring Washer	10 MFZN2W3	バネ座金		4	01
		ACCESSORIES		付属品			
	V6886800	Wrench		ベンチスパナ			

∗ : New Parts

RANK : Japan only

■ KEYBOARD ASSEMBLY

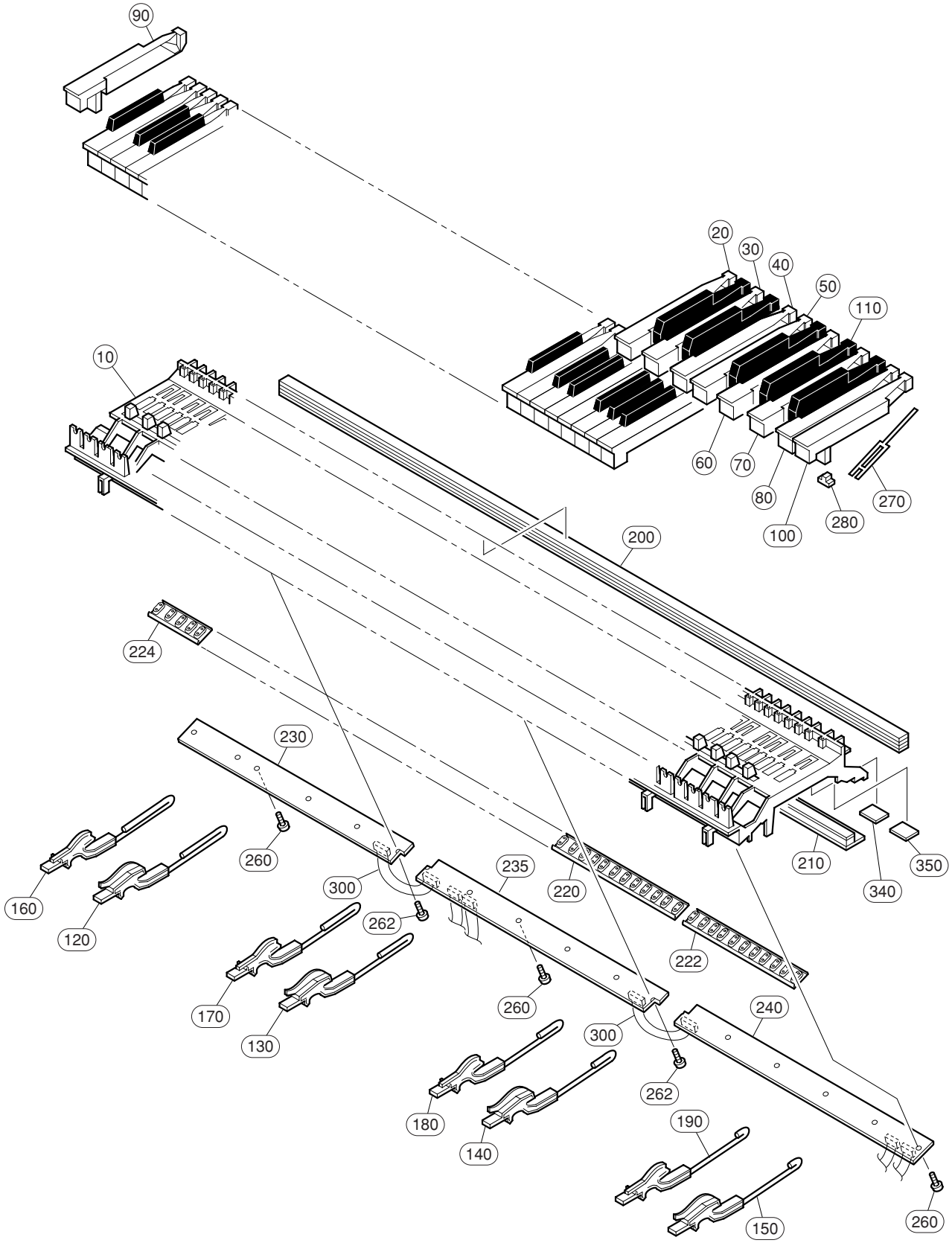

REF NO.	PART NO.	DESCRIPTION		部品名	REMARKS	QTY	RANK
		KEYBOARD ASSEMBLY		GH3鍵盤Ass'y	CLP-265GP		
	V8278600	Keyboard Assembly	GH3 A88 K6	GH3鍵盤			57
10	--	Frame		フレーム88アウトサート	(VU42210)		
20	VU101000	White Key	WHITE C	白鍵C		7	05
30	VU101100	White Key	WHITE D	白鍵D		7	05
40	VU101200	White Key	WHITE E	白鍵E		7	05
50	VU101300	White Key	WHITE F	白鍵F		7	05
60	VU101400	White Key	WHITE G	白鍵G		7	05
70	VU101500	White Key	WHITE A	白鍵A		7	05
80	VU101600	White Key	WHITE B	白鍵B		8	05
90	VU101700	White Key	WHITE A'	白鍵A'			05
100	VU101800	White Key	WHITE C'	白鍵C'			05
110	VU102100	Black Key	BLACK	黒鍵		36	05
120	VY828500	Hammer Assembly, White Key	W1	ドーム用ハンマーW1		13	05
130	VY828600	Hammer Assembly, White Key	W2	ドーム用ハンマーW2		13	05
140	VY828700	Hammer Assembly, White Key	W3	ドーム用ハンマーW3		13	05
150	VY828800	Hammer Assembly, White Key	W4	ドーム用ハンマーW4		13	05
160	VY828900	Hammer Assembly, Black Key	B1	ドーム用ハンマーB1		9	05
170	VY829000	Hammer Assembly, Black Key	B2	ドーム用ハンマーB2		9	05
180	VY829100	Hammer Assembly, Black Key	B3	ドーム用ハンマーB3		9	05
190	VY829200	Hammer Assembly, Black Key	B4	ドーム用ハンマーB4		9	05
200	V8468200	Stopper Felt	U88_S	ストッパーU88_S			10
210	V7640100	Stopper Felt	L88_W 5X28X10.1T	ストッパーL88_W			07
220	V8286600	Rubber Contact	GH3 3M OCT D-C#	シーソードームD－C#	D0-C#1,D1-C#2,D2-C#3, D3-C#4,D4-C#5,D5-C#6	6	05
222	V8286800	Rubber Contact	GH3 3M OCT A-C#	シーソードームA－C#	A-1-C#0		06
224	V8286700	Rubber Contact	GH3 3M OCT D-C	シーソードームD－C	D6-C7		06
230	V8904600	Circuit Board	GH3_EBUS L	GH3_EBUSシートL			18
235	V8904700	Circuit Board	GH3_EBUS M	GH3_EBUSシートM			18
240	V8904800	Circuit Board	GH3_EBUS H	GH3_EBUSシートH			18
260	VT413400	Bind Head Tapping Screw-P	3.0X10 MFZN2	+バインドPタイト		14	01
260	WF001000	Bind Head Tapping Screw-P	3.0X10 MFZN2W3	Pタイト+BIND		14	01
262	WF765500	PW Head Tapping Screw-P	3.0X10-10 MFZN2W3	Pタイト+PWH		2	01
270	V2798500	Spring R	GH	スプリングR		88	
270	VZ417900	Spring R	GH	スプリングR		88	03
280	V2211300	Actuate Rubber 2	GH,GHD,HE	駆動ラバー2		88	03
280	VU237500	Actuate Rubber		駆動ラバー		88	03
280	--	Actuate Rubber,NES	GH,GHD,HE,HED,NWK	駆動ラバーNES	(WJ02780)	88	
290	--	Grease	G-1006Y	グリス	(V627430)		
295	VU342000	Grease	PG-661	グリス			26
300	V8468100	Cable	7P L=86 P=2	ケーブル		2	01
340	VV467900	Stopper Support A	35.5 20 _	ストッパーサポートA		7	03
350	VV468100	Stopper Support B	24 20	ストッパーサポートB		12	03
		JIGS		工具			99
	TX000670	Rod		ロッド			

＊: New Parts

RANK : Japan only

■ ELECTRICAL PARTS

DM

REF NO.	PART NO.	DESCRIPTION		部品名	REMARKS	QTY	RANK
		ELECTRICAL PARTS		電気部品	CLP-265GP		
*	**WJ285800**	Circuit Board	DM	DMシート	(WJ28590)(X5830E0)		
	WE490700	Circuit Board	AJACK	AJACKシート	(WE49060)(X6217B0)		09
	WE005500	Circuit Board	DJACK	DJACKシート	(WE00560)(X4470D0)		08
*	**WH503400**	Circuit Board	EQ	EQシート	(WH50330)(X4413A0)		
	VT151500	Circuit Board	FU60	FU60シート	U (VT15180)(XQ395A0)(XQ395B0)(XQ779A0)(XQ779B0)		07
	VT151600	Circuit Board	FU60	FU60シート	E,B,K (VT15190)(XQ395B0)(XQ779B0)		07
	VT152900	Circuit Board	FU60	FU60シート	N (VT15320)(XQ395A0)(XQ395B0)(XQ779A0)(XQ779B0)		09
	V8904600	Circuit Board	GH3_EBUS L	GH3_EBUSシートL	(X2177D0)		18
	V8904700	Circuit Board	GH3_EBUS M	GH3_EBUSシートM	(X2178E0)		18
	V8904800	Circuit Board	GH3_EBUS H	GH3_EBUSシートH	(X2179D0)		18
	WC045900	Circuit Board	HP	HPシート	(WC04580)(XQ389A0)(XQ390A0)		05
	--	Circuit Board	MA80S	MA80Sシート	U (WB55440)(WB55500)(X4384D0)(X4384E0)		
	--	Circuit Board	MA80S	MA80Sシート	E,B,N,K (WC03060)(WC03050)(X4384E0)		
	WC175500	Circuit Board	NET1	NET1シート	(WC17540)(XT123B0)		04
	WB970400	Circuit Board	PEDAL	ペダルシート	(WB97030)(XR780C0)		08
	WB970500	Circuit Board	PEDAL VR	ペダルVRシート	(WB97030)(XR780C0)		07
	WC561200	Circuit Board	PJK	PJKシート	(WC56110)(X5143A0)		04
	VN637600	Circuit Board	PL	PLシート	(VN63740)(XL151B0)		03
	VU659100	Circuit Board	PL	PLシート	(VU65900)(XR898A0)		03
	WE089800	Circuit Board	PNL	PNLシート	(WE08970)(X5955C0)		07
	WE090000	Circuit Board	PNR	PNRシート	(WE08990)(X5956C0)		10
	WE090100	Circuit Board	MV	MVシート	(WE08990)(X5956C0)		04
*	**WJ285800**	Circuit Board	DM	DMシート	(WJ28590)(X5830E0)		
C0001	**US064100**	Ceramic Capacitor-B (chip)	0.0100 50V K RECT.	チップセラ（B）			01
-0003	**US064100**	Ceramic Capacitor-B (chip)	0.0100 50V K RECT.	チップセラ（B）			01
C0004	**US062100**	Ceramic Capacitor-SL(chip)	100P 50V J RECT.	チップセラ（SL）			01
C0005	**US064100**	Ceramic Capacitor-B (chip)	0.0100 50V K RECT.	チップセラ（B）			01
C0006	**US062100**	Ceramic Capacitor-SL(chip)	100P 50V J RECT.	チップセラ（SL）			01
-0010	**US062100**	Ceramic Capacitor-SL(chip)	100P 50V J RECT.	チップセラ（SL）			01
C0012	**UF128470**	Electrolytic Cap. (chip)	470 10V UUR1A4	チップケミコン			02
C0014	**US065100**	Ceramic Capacitor-F (chip)	0.100 50V Z RECT.	チップセラF			
C0014	**US135100**	Ceramic Capacitor-F (chip)	0.1000 16V Z RECT.	チップセラ（F）			01
C0014	**US145100**	Ceramic Capacitor-F (chip)	0.1000 25V Z RECT.	チップセラ（F）			01
C0016	**US064100**	Ceramic Capacitor-B (chip)	0.0100 50V K RECT.	チップセラ（B）			01
C0020	**US062470**	Ceramic Capacitor-SL(chip)	470P 50V J RECT.	チップセラ（SL）			01
C0021	**US064100**	Ceramic Capacitor-B (chip)	0.0100 50V K RECT.	チップセラ（B）			01
-0024	**US064100**	Ceramic Capacitor-B (chip)	0.0100 50V K RECT.	チップセラ（B）			01
C0025	**UF017220**	Electrolytic Cap. (chip)	22 6.3V	チップケミコン			01
C0026	**US065100**	Ceramic Capacitor-F (chip)	0.100 50V Z RECT.	チップセラF			
C0026	**US135100**	Ceramic Capacitor-F (chip)	0.1000 16V Z RECT.	チップセラ（F）			01
C0026	**US145100**	Ceramic Capacitor-F (chip)	0.1000 25V Z RECT.	チップセラ（F）			01
C0027	**UF017220**	Electrolytic Cap. (chip)	22 6.3V	チップケミコン			01
C0028	**US064100**	Ceramic Capacitor-B (chip)	0.0100 50V K RECT.	チップセラ（B）			01
-0030	**US064100**	Ceramic Capacitor-B (chip)	0.0100 50V K RECT.	チップセラ（B）			01
C0032	**UF017220**	Electrolytic Cap. (chip)	22 6.3V	チップケミコン			01
C0033	**US064100**	Ceramic Capacitor-B (chip)	0.0100 50V K RECT.	チップセラ（B）			01
C0034	**US064100**	Ceramic Capacitor-B (chip)	0.0100 50V K RECT.	チップセラ（B）			01
C0040	**RD357470**	Carbon Resistor (chip)	47.0K 63M J RECT.	チップ抵抗			01
C0041	**RD357470**	Carbon Resistor (chip)	47.0K 63M J RECT.	チップ抵抗			01
C0042	**US064100**	Ceramic Capacitor-B (chip)	0.0100 50V K RECT.	チップセラ（B）			01
C0043	**RD357470**	Carbon Resistor (chip)	47.0K 63M J RECT.	チップ抵抗			01
-0045	**RD357470**	Carbon Resistor (chip)	47.0K 63M J RECT.	チップ抵抗			01
C0046	**US065100**	Ceramic Capacitor-F (chip)	0.100 50V Z RECT.	チップセラF			
C0046	**US135100**	Ceramic Capacitor-F (chip)	0.1000 16V Z RECT.	チップセラ（F）			01
C0046	**US145100**	Ceramic Capacitor-F (chip)	0.1000 25V Z RECT.	チップセラ（F）			01
C0047	**RD357470**	Carbon Resistor (chip)	47.0K 63M J RECT.	チップ抵抗			01
C0048	**UF018100**	Electrolytic Cap. (chip)	100 6.3V	チップケミコン			01
C0049	**RD357470**	Carbon Resistor (chip)	47.0K 63M J RECT.	チップ抵抗			01
C0050	**RD357470**	Carbon Resistor (chip)	47.0K 63M J RECT.	チップ抵抗			01
C0051	**US065100**	Ceramic Capacitor-F (chip)	0.100 50V Z RECT.	チップセラF			

* : New Parts

RANK : Japan only

DM

REF NO.	PART NO.	DESCRIPTION		部品名	REMARKS	QTY	RANK
C0051	**US135100**	Ceramic Capacitor-F (chip)	0.1000 16V Z RECT.	チップセラ（F）			01
C0051	**US145100**	Ceramic Capacitor-F (chip)	0.1000 25V Z RECT.	チップセラ（F）			01
C0052	**UF017470**	Electrolytic Cap. (chip)	47 6.3V	チップケミコン			01
C0053	**UF017220**	Electrolytic Cap. (chip)	22 6.3V	チップケミコン			01
C0054	**US064100**	Ceramic Capacitor-B (chip)	0.0100 50V K RECT.	チップセラ（B）			01
-0056	**US064100**	Ceramic Capacitor-B (chip)	0.0100 50V K RECT.	チップセラ（B）			01
C0057	**UF017220**	Electrolytic Cap. (chip)	22 6.3V	チップケミコン			01
C0059	**US064100**	Ceramic Capacitor-B (chip)	0.0100 50V K RECT.	チップセラ（B）			01
-0061	**US064100**	Ceramic Capacitor-B (chip)	0.0100 50V K RECT.	チップセラ（B）			01
C0062	**UF017220**	Electrolytic Cap. (chip)	22 6.3V	チップケミコン			01
C0063	**UF017220**	Electrolytic Cap. (chip)	22 6.3V	チップケミコン			01
C0064	**US064100**	Ceramic Capacitor-B (chip)	0.0100 50V K RECT.	チップセラ（B）			01
C0065	**US065100**	Ceramic Capacitor-F (chip)	0.100 50V Z RECT.	チップセラ F			
C0065	**US135100**	Ceramic Capacitor-F (chip)	0.1000 16V Z RECT.	チップセラ（F）			01
C0065	**US145100**	Ceramic Capacitor-F (chip)	0.1000 25V Z RECT.	チップセラ（F）			01
C0066	**UF017220**	Electrolytic Cap. (chip)	22 6.3V	チップケミコン			01
C0067	**US064100**	Ceramic Capacitor-B (chip)	0.0100 50V K RECT.	チップセラ（B）			01
-0070	**US064100**	Ceramic Capacitor-B (chip)	0.0100 50V K RECT.	チップセラ（B）			01
C0072	**US064100**	Ceramic Capacitor-B (chip)	0.0100 50V K RECT.	チップセラ（B）			01
-0075	**US064100**	Ceramic Capacitor-B (chip)	0.0100 50V K RECT.	チップセラ（B）			01
C0076	**UF037470**	Electrolytic Cap. (chip)	47 16V	チップケミコン			01
C0078	**US065100**	Ceramic Capacitor-F (chip)	0.100 50V Z RECT.	チップセラ F			
C0078	**US135100**	Ceramic Capacitor-F (chip)	0.1000 16V Z RECT.	チップセラ（F）			01
C0078	**US145100**	Ceramic Capacitor-F (chip)	0.1000 25V Z RECT.	チップセラ（F）			01
C0082	**UF017220**	Electrolytic Cap. (chip)	22 6.3V	チップケミコン			01
C0083	**US064100**	Ceramic Capacitor-B (chip)	0.0100 50V K RECT.	チップセラ（B）			01
C0084	**UF017220**	Electrolytic Cap. (chip)	22 6.3V	チップケミコン			01
C0085	**US064100**	Ceramic Capacitor-B (chip)	0.0100 50V K RECT.	チップセラ（B）			01
C0086	**US064100**	Ceramic Capacitor-B (chip)	0.0100 50V K RECT.	チップセラ（B）			01
C0087	**US063150**	Ceramic Capacitor-B (chip)	1500P 50V K RECT.	チップセラ（B）			01
C0088	**US063150**	Ceramic Capacitor-B (chip)	1500P 50V K RECT.	チップセラ（B）			01
C0093	**US064100**	Ceramic Capacitor-B (chip)	0.0100 50V K RECT.	チップセラ（B）			01
C0094	**US062470**	Ceramic Capacitor-SL(chip)	470P 50V J RECT.	チップセラ（SL）			01
C0095	**US062470**	Ceramic Capacitor-SL(chip)	470P 50V J RECT.	チップセラ（SL）			01
C0096	**UF037100**	Electrolytic Cap. (chip)	10 16V	チップケミコン			01
C0097	**UF037220**	Electrolytic Cap. (chip)	22 16V	チップケミコン			01
C0099	**US064100**	Ceramic Capacitor-B (chip)	0.0100 50V K RECT.	チップセラ（B）			01
-0105	**US064100**	Ceramic Capacitor-B (chip)	0.0100 50V K RECT.	チップセラ（B）			01
C0108	**US064100**	Ceramic Capacitor-B (chip)	0.0100 50V K RECT.	チップセラ（B）			01
C0109	**US064100**	Ceramic Capacitor-B (chip)	0.0100 50V K RECT.	チップセラ（B）			01
C0114	**US064100**	Ceramic Capacitor-B (chip)	0.0100 50V K RECT.	チップセラ（B）			01
C0115	**UF017220**	Electrolytic Cap. (chip)	22 6.3V	チップケミコン			01
C0116	**US064100**	Ceramic Capacitor-B (chip)	0.0100 50V K RECT.	チップセラ（B）			01
C0117	**US065100**	Ceramic Capacitor-F (chip)	0.100 50V Z RECT.	チップセラ F			
C0117	**US135100**	Ceramic Capacitor-F (chip)	0.1000 16V Z RECT.	チップセラ（F）			01
C0117	**US145100**	Ceramic Capacitor-F (chip)	0.1000 25V Z RECT.	チップセラ（F）			01
C0118	**UF017220**	Electrolytic Cap. (chip)	22 6.3V	チップケミコン			01
C0119	**US064100**	Ceramic Capacitor-B (chip)	0.0100 50V K RECT.	チップセラ（B）			01
-0121	**US064100**	Ceramic Capacitor-B (chip)	0.0100 50V K RECT.	チップセラ（B）			01
C0126	**US061220**	Ceramic Capacitor-CH(chip)	22P 50V J RECT.	チップセラ（CH）			01
C0128	**US061270**	Ceramic Capacitor-CH(chip)	27P 50V J RECT.	チップセラ（CH）			01
C0131	**UF037470**	Electrolytic Cap. (chip)	47 16V	チップケミコン			01
C0133	**US064100**	Ceramic Capacitor-B (chip)	0.0100 50V K RECT.	チップセラ（B）			01
C0138	**US064100**	Ceramic Capacitor-B (chip)	0.0100 50V K RECT.	チップセラ（B）			01
C0140	**US064100**	Ceramic Capacitor-B (chip)	0.0100 50V K RECT.	チップセラ（B）			01
C0141	**US064100**	Ceramic Capacitor-B (chip)	0.0100 50V K RECT.	チップセラ（B）			01
C0144	**US062470**	Ceramic Capacitor-SL(chip)	470P 50V J RECT.	チップセラ（SL）			01
C0145	**US062470**	Ceramic Capacitor-SL(chip)	470P 50V J RECT.	チップセラ（SL）			01
C0149	**US064100**	Ceramic Capacitor-B (chip)	0.0100 50V K RECT.	チップセラ（B）			01
C0152	**US064100**	Ceramic Capacitor-B (chip)	0.0100 50V K RECT.	チップセラ（B）			01
C0300	**US065100**	Ceramic Capacitor-F (chip)	0.100 50V Z RECT.	チップセラ F			
C0300	**US135100**	Ceramic Capacitor-F (chip)	0.1000 16V Z RECT.	チップセラ（F）			01
C0300	**US145100**	Ceramic Capacitor-F (chip)	0.1000 25V Z RECT.	チップセラ（F）			01
C0301	**US065100**	Ceramic Capacitor-F (chip)	0.100 50V Z RECT.	チップセラ F			
C0301	**US135100**	Ceramic Capacitor-F (chip)	0.1000 16V Z RECT.	チップセラ（F）			01
C0301	**US145100**	Ceramic Capacitor-F (chip)	0.1000 25V Z RECT.	チップセラ（F）			01
C0302	**US065100**	Ceramic Capacitor-F (chip)	0.100 50V Z RECT.	チップセラ F			
C0302	**US135100**	Ceramic Capacitor-F (chip)	0.1000 16V Z RECT.	チップセラ（F）			01
C0302	**US145100**	Ceramic Capacitor-F (chip)	0.1000 25V Z RECT.	チップセラ（F）			01
C0303	**US065100**	Ceramic Capacitor-F (chip)	0.100 50V Z RECT.	チップセラ F			

＊: New Parts

RANK : Japan only

DM

REF NO.	PART NO.	DESCRIPTION		部品名	REMARKS	QTY	RANK
C0303	**US135100**	Ceramic Capacitor-F (chip)	0.1000 16V Z RECT.	チップセラ（F）			01
C0303	**US145100**	Ceramic Capacitor-F (chip)	0.1000 25V Z RECT.	チップセラ（F）			01
C0304	**US065100**	Ceramic Capacitor-F (chip)	0.100 50V Z RECT.	チップセラ F			
C0304	**US135100**	Ceramic Capacitor-F (chip)	0.1000 16V Z RECT.	チップセラ（F）			01
C0304	**US145100**	Ceramic Capacitor-F (chip)	0.1000 25V Z RECT.	チップセラ（F）			01
C0305	**US065100**	Ceramic Capacitor-F (chip)	0.100 50V Z RECT.	チップセラ F			
C0305	**US135100**	Ceramic Capacitor-F (chip)	0.1000 16V Z RECT.	チップセラ（F）			01
C0305	**US145100**	Ceramic Capacitor-F (chip)	0.1000 25V Z RECT.	チップセラ（F）			01
C0306	**US065100**	Ceramic Capacitor-F (chip)	0.100 50V Z RECT.	チップセラ F			
C0306	**US135100**	Ceramic Capacitor-F (chip)	0.1000 16V Z RECT.	チップセラ（F）			01
C0306	**US145100**	Ceramic Capacitor-F (chip)	0.1000 25V Z RECT.	チップセラ（F）			01
C0307	**US065100**	Ceramic Capacitor-F (chip)	0.100 50V Z RECT.	チップセラ F			
C0307	**US135100**	Ceramic Capacitor-F (chip)	0.1000 16V Z RECT.	チップセラ（F）			01
C0307	**US145100**	Ceramic Capacitor-F (chip)	0.1000 25V Z RECT.	チップセラ（F）			01
C0308	**US065100**	Ceramic Capacitor-F (chip)	0.100 50V Z RECT.	チップセラ F			
C0308	**US135100**	Ceramic Capacitor-F (chip)	0.1000 16V Z RECT.	チップセラ（F）			01
C0308	**US145100**	Ceramic Capacitor-F (chip)	0.1000 25V Z RECT.	チップセラ（F）			01
C0309	**US065100**	Ceramic Capacitor-F (chip)	0.100 50V Z RECT.	チップセラ F			
C0309	**US135100**	Ceramic Capacitor-F (chip)	0.1000 16V Z RECT.	チップセラ（F）			01
C0309	**US145100**	Ceramic Capacitor-F (chip)	0.1000 25V Z RECT.	チップセラ（F）			01
C0310	**US065100**	Ceramic Capacitor-F (chip)	0.100 50V Z RECT.	チップセラ F			
C0310	**US135100**	Ceramic Capacitor-F (chip)	0.1000 16V Z RECT.	チップセラ（F）			01
C0310	**US145100**	Ceramic Capacitor-F (chip)	0.1000 25V Z RECT.	チップセラ（F）			01
C0311	**US065100**	Ceramic Capacitor-F (chip)	0.100 50V Z RECT.	チップセラ F			
C0311	**US135100**	Ceramic Capacitor-F (chip)	0.1000 16V Z RECT.	チップセラ（F）			01
C0311	**US145100**	Ceramic Capacitor-F (chip)	0.1000 25V Z RECT.	チップセラ（F）			01
C0312	**US065100**	Ceramic Capacitor-F (chip)	0.100 50V Z RECT.	チップセラ F			
C0312	**US135100**	Ceramic Capacitor-F (chip)	0.1000 16V Z RECT.	チップセラ（F）			01
C0312	**US145100**	Ceramic Capacitor-F (chip)	0.1000 25V Z RECT.	チップセラ（F）			01
C0313	**US065100**	Ceramic Capacitor-F (chip)	0.100 50V Z RECT.	チップセラ F			
C0313	**US135100**	Ceramic Capacitor-F (chip)	0.1000 16V Z RECT.	チップセラ（F）			01
C0313	**US145100**	Ceramic Capacitor-F (chip)	0.1000 25V Z RECT.	チップセラ（F）			01
C0314	**US065100**	Ceramic Capacitor-F (chip)	0.100 50V Z RECT.	チップセラ F			
C0314	**US135100**	Ceramic Capacitor-F (chip)	0.1000 16V Z RECT.	チップセラ（F）			01
C0314	**US145100**	Ceramic Capacitor-F (chip)	0.1000 25V Z RECT.	チップセラ（F）			01
C0315	**US065100**	Ceramic Capacitor-F (chip)	0.100 50V Z RECT.	チップセラ F			
C0315	**US135100**	Ceramic Capacitor-F (chip)	0.1000 16V Z RECT.	チップセラ（F）			01
C0315	**US145100**	Ceramic Capacitor-F (chip)	0.1000 25V Z RECT.	チップセラ（F）			01
C0316	**US065100**	Ceramic Capacitor-F (chip)	0.100 50V Z RECT.	チップセラ F			
C0316	**US135100**	Ceramic Capacitor-F (chip)	0.1000 16V Z RECT.	チップセラ（F）			01
C0316	**US145100**	Ceramic Capacitor-F (chip)	0.1000 25V Z RECT.	チップセラ（F）			01
C0317	**US064100**	Ceramic Capacitor-B (chip)	0.0100 50V K RECT.	チップセラ（B）			01
-0320	**US064100**	Ceramic Capacitor-B (chip)	0.0100 50V K RECT.	チップセラ（B）			01
C0321	**US062100**	Ceramic Capacitor-SL(chip)	100P 50V J RECT.	チップセラ（SL）			01
-0323	**US062100**	Ceramic Capacitor-SL(chip)	100P 50V J RECT.	チップセラ（SL）			01
CN001	**VT388500**	Connector Base Post	PH 4P TE	ベース付ポスト			01
CN002	**VT388600**	Connector Base Post	PH 5P TE	ベース付ポスト			01
CN003	**VT388600**	Connector Base Post	PH 5P TE	ベース付ポスト			01
CN004	**VT388800**	Connector Base Post	PH 7P TE	ベース付ポスト			
CN005	**VT389000**	Connector Base Post	PH 9P TE	ベース付ポスト			01
CN006	**VT388900**	Connector Base Post	PH 8P TE	ベース付ポスト			01
CN007	**VT389200**	Connector Base Post	PH 11P TE	ベース付ポスト			01
CN009	**VT388600**	Connector Base Post	PH 5P TE	ベース付ポスト			01
CN010	**VT388800**	Connector Base Post	PH 7P TE	ベース付ポスト			
D0001	**VN681100**	Diode	EC10DS4TE12L1A400V	ダイオード			01
D0001	**VS201100**	Diode	D1F60 1A 600V TP	ダイオード			01
D0002	**VN681100**	Diode	EC10DS4TE12L1A400V	ダイオード			01
D0002	**VS201100**	Diode	D1F60 1A 600V TP	ダイオード			01
D0003	**VN681100**	Diode	EC10DS4TE12L1A400V	ダイオード			01
D0003	**VS201100**	Diode	D1F60 1A 600V TP	ダイオード			01
DA003	**V9424900**	Diode Array	TE85L	ダイオードアレイ			01
DA004	**V9424900**	Diode Array	TE85L	ダイオードアレイ			01
EM001	**WE056200**	EMI Filter (chip)	NFM21PC105B1A3D	エミフィル チップ			01
EM002	**WE056200**	EMI Filter (chip)	NFM21PC105B1A3D	エミフィル チップ			01
IC001	**X3847A00**	IC	S-80142ANMC-JC3T2G	I C	SYSTEM RESET		01
IC002	**X3833A00**	IC	SN74AHC1G08DCKR	I C	AND		01
IC002	**XP116A00**	IC	TC7S08FU	I C			01
IC004	**X6055A00**	IC	YMW767-VTZ	I C	CPU+XG		10
IC005	**X5914A00**	IC	UPC37M32TJ-E1-AZ	I C	REGULATOR +3.3V/2.5V		03
IC007	**X6055A00**	IC	YMW767-VTZ	I C	CPU+XG		10

＊ : New Parts

RANK : Japan only

DM

REF NO.	PART NO.	DESCRIPTION		部品名	REMARKS	QTY	RANK
IC008	**X5999400**	IC	PROG/WAVE1	IC	MASK ROM (P2 ROM)		06
IC010	**XS534A00**	IC	NJM78M05DL1A	IC	REGULATOR +5V		02
IC011	**X6040A00**	IC	AK4385ET	IC	D/A CONVERTER		03
IC014	**X3505A00**	IC	NJM2068M-D(TE2)	IC	OP AMP		02
IC014	**X7351A00**	IC	UPC4570G2-E1-A	IC	OP AMP		01
IC015	**X2310A00**	IC	MX29LV400BTC-70G	IC	FLASH ROM 4M		06
IC015	**X4490A00**	IC	MBM29LV400BC70PFTN	IC	FLASH MEMORY 4M		08
IC015	**X7130A00**	IC	MX29LV400CBTC-70G	IC	FLASH ROM 4M		04
IC016	**X6000100**	IC	PROG/WAVE2	IC	MASK ROM (P2 ROM)		08
IC018	**X5647A00**	IC	SN74LV32APWR	IC	OR		01
IC021	**X2725A00**	IC	MSM51V4265E-60T3-K	IC	DRAM 4M		05
IC021	**X2726A00**	IC	GLT440L16P-40TC	IC	DRAM 4M		05
IC021	**X6504A00**	IC	M11L416256SA-35TG	IC	DRAM 4M		05
IC021	**X6504B00**	IC	M11L416256SA-35TG	IC	DRAM 4M		
IC023	**X3833A00**	IC	SN74AHC1G08DCKR	IC	AND		01
IC023	**XP116A00**	IC	TC7S08FU	IC	AND		01
IC024	**X6008200**	IC	HD6433690B70FYV	IC	H8		
IC027	**X5879A00**	IC	ISP1161A1BD_118-PB	IC	USB CONTROLLER		09
IC028	**X2709A00**	IC	SN74AHCT245PWR	IC	TRANSCEIVER		02
IC028	**XT744B00**	IC	TC74VHCT245AFT(E,K	IC	TRANSCEIVER		02
IC029	**X3865A00**	IC	SN74LV126APWR	IC	BUFFER		
L0001	**VY657200**	Chip Inductance	600 BK1608HM601-T	チップインダクタ			01
-0004	**VY657200**	Chip Inductance	600 BK1608HM601-T	チップインダクタ			01
L0005	**V8901200**	Chip Inductance	BLM21PG221SN1D	チップソリッドインダ			01
L0007	**V8901200**	Chip Inductance	BLM21PG221SN1D	チップソリッドインダ			01
L0012	**V2747000**	Chip Inductance	BLM18PG600SN1	チップインダクタ			
-0014	**V2747000**	Chip Inductance	BLM18PG600SN1	チップインダクタ			
L0016	**RD250000**	Carbon Resistor (chip)	0.0 0.0 J RECT.	チップ抵抗			01
L0017	**RD250000**	Carbon Resistor (chip)	0.0 0.0 J RECT.	チップ抵抗			01
R0001	**RD357100**	Carbon Resistor (chip)	10.0K 63M J RECT.	チップ抵抗			01
R0002	**RD350000**	Carbon Resistor (chip)	0 63M J RECT.	チップ抵抗			01
-0004	**RD350000**	Carbon Resistor (chip)	0 63M J RECT.	チップ抵抗			01
R0008	**RD357100**	Carbon Resistor (chip)	10.0K 63M J RECT.	チップ抵抗			01
R0009	**RD357470**	Carbon Resistor (chip)	47.0K 63M J RECT.	チップ抵抗			01
R0010	**RD358470**	Carbon Resistor (chip)	470.0K 63M J RECT.	チップ抵抗			01
R0014	**RD357100**	Carbon Resistor (chip)	10.0K 63M J RECT.	チップ抵抗			01
R0015	**RD354470**	Carbon Resistor (chip)	47.0 63M J RECT.	チップ抵抗			01
R0016	**RD357100**	Carbon Resistor (chip)	10.0K 63M J RECT.	チップ抵抗			01
R0017	**RD354330**	Carbon Resistor (chip)	33.0 63M J RECT.	チップ抵抗			01
R0018	**RD354330**	Carbon Resistor (chip)	33.0 63M J RECT.	チップ抵抗			01
R0019	**RD354470**	Carbon Resistor (chip)	47.0 63M J RECT.	チップ抵抗			01
-0021	**RD354470**	Carbon Resistor (chip)	47.0 63M J RECT.	チップ抵抗			01
R0023	**RD354470**	Carbon Resistor (chip)	47.0 63M J RECT.	チップ抵抗			01
-0026	**RD354470**	Carbon Resistor (chip)	47.0 63M J RECT.	チップ抵抗			01
R0027	**RD350000**	Carbon Resistor (chip)	0 63M J RECT.	チップ抵抗			01
-0030	**RD350000**	Carbon Resistor (chip)	0 63M J RECT.	チップ抵抗			01
R0031	**RD357100**	Carbon Resistor (chip)	10.0K 63M J RECT.	チップ抵抗			01
R0033	**RD357470**	Carbon Resistor (chip)	47.0K 63M J RECT.	チップ抵抗			01
R0035	**RD357470**	Carbon Resistor (chip)	47.0K 63M J RECT.	チップ抵抗			01
R0038	**RD354470**	Carbon Resistor (chip)	47.0 63M J RECT.	チップ抵抗			01
-0045	**RD354470**	Carbon Resistor (chip)	47.0 63M J RECT.	チップ抵抗			01
R0046	**RD357220**	Carbon Resistor (chip)	22.0K 63M J RECT.	チップ抵抗			01
R0047	**RD357220**	Carbon Resistor (chip)	22.0K 63M J RECT.	チップ抵抗			01
R0048	**RD354470**	Carbon Resistor (chip)	47.0 63M J RECT.	チップ抵抗			01
-0051	**RD354470**	Carbon Resistor (chip)	47.0 63M J RECT.	チップ抵抗			01
R0053	**RD354470**	Carbon Resistor (chip)	47.0 63M J RECT.	チップ抵抗			01
-0057	**RD354470**	Carbon Resistor (chip)	47.0 63M J RECT.	チップ抵抗			01
R0059	**RD354470**	Carbon Resistor (chip)	47.0 63M J RECT.	チップ抵抗			01
-0061	**RD354470**	Carbon Resistor (chip)	47.0 63M J RECT.	チップ抵抗			01
R0063	**RD357470**	Carbon Resistor (chip)	47.0K 63M J RECT.	チップ抵抗			01
R0064	**RD350000**	Carbon Resistor (chip)	0 63M J RECT.	チップ抵抗			01
-0067	**RD350000**	Carbon Resistor (chip)	0 63M J RECT.	チップ抵抗			01
R0068	**RD357100**	Carbon Resistor (chip)	10.0K 63M J RECT.	チップ抵抗			01
R0069	**RD354470**	Carbon Resistor (chip)	47.0 63M J RECT.	チップ抵抗			01
-0072	**RD354470**	Carbon Resistor (chip)	47.0 63M J RECT.	チップ抵抗			01
R0074	**RD350000**	Carbon Resistor (chip)	0 63M J RECT.	チップ抵抗			01
R0076	**RD354470**	Carbon Resistor (chip)	47.0 63M J RECT.	チップ抵抗			01
-0079	**RD354470**	Carbon Resistor (chip)	47.0 63M J RECT.	チップ抵抗			01
R0081	**RD350000**	Carbon Resistor (chip)	0 63M J RECT.	チップ抵抗			01
R0082	**RD356220**	Carbon Resistor (chip)	2.2K 63M J RECT.	チップ抵抗			01

＊: New Parts

RANK : Japan only

DM

REF NO.	PART NO.	DESCRIPTION		部品名	REMARKS	QTY	RANK
R0083	**RD356220**	Carbon Resistor (chip)	2.2K 63M J RECT.	チップ抵抗			01
R0084	**RD354470**	Carbon Resistor (chip)	47.0 63M J RECT.	チップ抵抗			01
R0085	**RD356330**	Carbon Resistor (chip)	3.3K 63M J RECT.	チップ抵抗			01
-0088	**RD356330**	Carbon Resistor (chip)	3.3K 63M J RECT.	チップ抵抗			01
R0089	**RD354470**	Carbon Resistor (chip)	47.0 63M J RECT.	チップ抵抗			01
R0092	**RD356470**	Carbon Resistor (chip)	4.7K 63M J RECT.	チップ抵抗			01
R0093	**RD356470**	Carbon Resistor (chip)	4.7K 63M J RECT.	チップ抵抗			01
R0094	**RD354470**	Carbon Resistor (chip)	47.0 63M J RECT.	チップ抵抗			01
R0095	**RD354470**	Carbon Resistor (chip)	47.0 63M J RECT.	チップ抵抗			01
R0096	**RD357470**	Carbon Resistor (chip)	47.0K 63M J RECT.	チップ抵抗			01
R0097	**RD357100**	Carbon Resistor (chip)	10.0K 63M J RECT.	チップ抵抗			01
R0098	**RD354470**	Carbon Resistor (chip)	47.0 63M J RECT.	チップ抵抗			01
R0099	**RD350000**	Carbon Resistor (chip)	0 63M J RECT.	チップ抵抗			01
R0101	**RD354470**	Carbon Resistor (chip)	47.0 63M J RECT.	チップ抵抗			01
R0102	**RD357100**	Carbon Resistor (chip)	10.0K 63M J RECT.	チップ抵抗			01
-0105	**RD357100**	Carbon Resistor (chip)	10.0K 63M J RECT.	チップ抵抗			01
R0106	**RD354470**	Carbon Resistor (chip)	47.0 63M J RECT.	チップ抵抗			01
R0107	**RD354470**	Carbon Resistor (chip)	47.0 63M J RECT.	チップ抵抗			01
R0109	**RD357100**	Carbon Resistor (chip)	10.0K 63M J RECT.	チップ抵抗			01
-0111	**RD357100**	Carbon Resistor (chip)	10.0K 63M J RECT.	チップ抵抗			01
R0113	**RD359100**	Carbon Resistor (chip)	1.0M 63M J RECT.	チップ抵抗			01
R0114	**RD357100**	Carbon Resistor (chip)	10.0K 63M J RECT.	チップ抵抗			01
R0115	**RD357220**	Carbon Resistor (chip)	22.0K 63M J RECT.	チップ抵抗			01
R0116	**RD359100**	Carbon Resistor (chip)	1.0M 63M J RECT.	チップ抵抗			01
R0117	**RD357100**	Carbon Resistor (chip)	10.0K 63M J RECT.	チップ抵抗			01
R0118	**RD355680**	Carbon Resistor (chip)	680.0 63M J RECT.	チップ抵抗			01
R0119	**RD357100**	Carbon Resistor (chip)	10.0K 63M J RECT.	チップ抵抗			01
R0120	**RD357100**	Carbon Resistor (chip)	10.0K 63M J RECT.	チップ抵抗			01
R0123	**RD356100**	Carbon Resistor (chip)	1.0K 63M J RECT.	チップ抵抗			01
R0124	**RD357100**	Carbon Resistor (chip)	10.0K 63M J RECT.	チップ抵抗			01
R0125	**RD356100**	Carbon Resistor (chip)	1.0K 63M J RECT.	チップ抵抗			01
R0126	**RD357100**	Carbon Resistor (chip)	10.0K 63M J RECT.	チップ抵抗			01
R0127	**RD357100**	Carbon Resistor (chip)	10.0K 63M J RECT.	チップ抵抗			01
R0128	**RD357470**	Carbon Resistor (chip)	47.0K 63M J RECT.	チップ抵抗			01
R0129	**RD354220**	Carbon Resistor (chip)	22.0 63M J RECT.	チップ抵抗			01
R0130	**RD354100**	Carbon Resistor (chip)	10.0 63M J RECT.	チップ抵抗			01
R0131	**RD354470**	Carbon Resistor (chip)	47.0 63M J RECT.	チップ抵抗			01
R0132	**RD354470**	Carbon Resistor (chip)	47.0 63M J RECT.	チップ抵抗			01
R0135	**RD357100**	Carbon Resistor (chip)	10.0K 63M J RECT.	チップ抵抗			01
R0136	**RD356220**	Carbon Resistor (chip)	2.2K 63M J RECT.	チップ抵抗			01
R0137	**RD356220**	Carbon Resistor (chip)	2.2K 63M J RECT.	チップ抵抗			01
R0138	**RD356330**	Carbon Resistor (chip)	3.3K 63M J RECT.	チップ抵抗			01
-0141	**RD356330**	Carbon Resistor (chip)	3.3K 63M J RECT.	チップ抵抗			01
R0149	**RD354470**	Carbon Resistor (chip)	47.0 63M J RECT.	チップ抵抗			01
-0151	**RD354470**	Carbon Resistor (chip)	47.0 63M J RECT.	チップ抵抗			01
R0154	**RD354470**	Carbon Resistor (chip)	47.0 63M J RECT.	チップ抵抗			01
R0156	**RD354470**	Carbon Resistor (chip)	47.0 63M J RECT.	チップ抵抗			01
R0161	**RD356560**	Carbon Resistor (chip)	5.6K 63M J RECT.	チップ抵抗			01
R0162	**RD356390**	Carbon Resistor (chip)	3.9K 63M J RECT.	チップ抵抗			01
R0163	**RD357100**	Carbon Resistor (chip)	10.0K 63M J RECT.	チップ抵抗			01
R0164	**RD350000**	Carbon Resistor (chip)	0 63M J RECT.	チップ抵抗			01
R0165	**RD357470**	Carbon Resistor (chip)	47.0K 63M J RECT.	チップ抵抗			01
-0168	**RD357470**	Carbon Resistor (chip)	47.0K 63M J RECT.	チップ抵抗			01
RA001	**RE047470**	Resistor Array	47KX4	抵抗アレイ			01
-003	**RE047470**	Resistor Array	47KX4	抵抗アレイ			01
RA004	**RE047220**	Resistor Array	22KX4	抵抗アレイ			01
RA005	**RE044470**	Resistor Array	47X4	抵抗アレイ			01
-026	**RE044470**	Resistor Array	47X4	抵抗アレイ			01
TA001	**WC668500**	Digital Transistor	UMG5N	デジタルトランジスタ			01
-004	**WC668500**	Digital Transistor	UMG5N	デジタルトランジスタ			01
TR001	**VY677700**	Digital Transistor	DTB123YK T146	デジタルトランジスタ			01
* TR001	**WG989900**	Digital Transistor	KRA226S-RTK/P	デジタルトランジスタ			
TR002	**VY677700**	Digital Transistor	DTB123YK T146	デジタルトランジスタ			01
* TR002	**WG989900**	Digital Transistor	KRA226S-RTK/P	デジタルトランジスタ			
TR003	**VY677700**	Digital Transistor	DTB123YK T146	デジタルトランジスタ			01
* TR003	**WG989900**	Digital Transistor	KRA226S-RTK/P	デジタルトランジスタ			
TR004	**VY677700**	Digital Transistor	DTB123YK T146	デジタルトランジスタ			01
* TR004	**WG989900**	Digital Transistor	KRA226S-RTK/P	デジタルトランジスタ			
TR005	**VY677600**	Digital Transistor	DTC123JKA TP	デジタルトランジスタ			01
TR006	**VY677600**	Digital Transistor	DTC123JKA TP	デジタルトランジスタ			01

* : New Parts

RANK : Japan only

DM and AJACK

REF NO.	PART NO.	DESCRIPTION		部品名	REMARKS	QTY	RANK
TR007	**VY677700**	Digital Transistor	DTB123YK T146	デジタルトランジスタ			01
* TR007	**WG989900**	Digital Transistor	KRA226S-RTK/P	デジタルトランジスタ			
TR008	**VY677700**	Digital Transistor	DTB123YK T146	デジタルトランジスタ			01
* TR008	**WG989900**	Digital Transistor	KRA226S-RTK/P	デジタルトランジスタ			
TR009	**VY677700**	Digital Transistor	DTB123YK T146	デジタルトランジスタ			01
* TR009	**WG989900**	Digital Transistor	KRA226S-RTK/P	デジタルトランジスタ			
TR010	**VY677700**	Digital Transistor	DTB123YK T146	デジタルトランジスタ			01
* TR010	**WG989900**	Digital Transistor	KRA226S-RTK/P	デジタルトランジスタ			
X0001	**WE018900**	Quartz Crystal Unit	33.8688M DSO751SV	水晶発振器			05
X0002	**V9864200**	Ceramic Resonator	10.0M CSTCE10M0G52	セラミック発振子			01
X0003	**V4093500**	Quartz Crystal Unit	6M SMD-49	水晶振動子			03
	WE490700	Circuit Board	AJACK	AJACKシート	(WE49060)(X6217B0)		09
C0001	**US064100**	Ceramic Capacitor-B (chip)	0.0100 50V K RECT.	チップセラ（B）			01
C0002	**US064100**	Ceramic Capacitor-B (chip)	0.0100 50V K RECT.	チップセラ（B）			01
C0003	**UR847470**	Electrolytic Cap.	47.00 25.0V RX TP	ケミコン			01
C0003	**UR857470**	Electrolytic Cap.	47.00 35.0V RX TP	ケミコン			01
C0004	**UR847470**	Electrolytic Cap.	47.00 25.0V RX TP	ケミコン			01
C0004	**UR857470**	Electrolytic Cap.	47.00 35.0V RX TP	ケミコン			01
C0005	**US063100**	Ceramic Capacitor-B (chip)	1000P 50V K RECT.	チップセラ（B）			01
C0006	**US063100**	Ceramic Capacitor-B (chip)	1000P 50V K RECT.	チップセラ（B）			01
C0009	**UN866470**	Electrolytic Cap.-BP	4.70 50.0V RX TP	BPケミコン			01
C0010	**UN866470**	Electrolytic Cap.-BP	4.70 50.0V RX TP	BPケミコン			01
C0013	**US063100**	Ceramic Capacitor-B (chip)	1000P 50V K RECT.	チップセラ（B）			01
C0014	**US063100**	Ceramic Capacitor-B (chip)	1000P 50V K RECT.	チップセラ（B）			01
C0015	**US062100**	Ceramic Capacitor-SL(chip)	100P 50V J RECT.	チップセラ（SL）			01
-0018	**US062100**	Ceramic Capacitor-SL(chip)	100P 50V J RECT.	チップセラ（SL）			01
C0019	**US063100**	Ceramic Capacitor-B (chip)	1000P 50V K RECT.	チップセラ（B）			01
C0020	**US063100**	Ceramic Capacitor-B (chip)	1000P 50V K RECT.	チップセラ（B）			01
C0021	**UR847470**	Electrolytic Cap.	47.00 25.0V RX TP	ケミコン			01
C0021	**UR857470**	Electrolytic Cap.	47.00 35.0V RX TP	ケミコン			01
C0022	**UR847470**	Electrolytic Cap.	47.00 25.0V RX TP	ケミコン			01
C0022	**UR857470**	Electrolytic Cap.	47.00 35.0V RX TP	ケミコン			01
C0023	**US062560**	Ceramic Capacitor-SL(chip)	560P 50V J RECT.	チップセラ（SL）			01
C0024	**US062560**	Ceramic Capacitor-SL(chip)	560P 50V J RECT.	チップセラ（SL）			01
C0025	**UR866470**	Electrolytic Cap.	4.70 50.0V RX TP	ケミコン			01
C0026	**UR866470**	Electrolytic Cap.	4.70 50.0V RX TP	ケミコン			01
C0027	**US062100**	Ceramic Capacitor-SL(chip)	100P 50V J RECT.	チップセラ（SL）			01
C0028	**US062100**	Ceramic Capacitor-SL(chip)	100P 50V J RECT.	チップセラ（SL）			01
C0029	**US061560**	Ceramic Capacitor-CH(chip)	56P 50V J RECT.	チップセラ（CH）			01
C0030	**US061560**	Ceramic Capacitor-CH(chip)	56P 50V J RECT.	チップセラ（CH）			01
C0031	**UR838100**	Electrolytic Cap.	100.00 16.0V RX TP	ケミコン			01
C0032	**UR838100**	Electrolytic Cap.	100.00 16.0V RX TP	ケミコン			01
C0033	**US064100**	Ceramic Capacitor-B (chip)	0.0100 50V K RECT.	チップセラ（B）			01
C0034	**US064100**	Ceramic Capacitor-B (chip)	0.0100 50V K RECT.	チップセラ（B）			01
C0037	**US065100**	Ceramic Capacitor-F (chip)	0.100 50V Z RECT.	チップセラF			
C0037	**US135100**	Ceramic Capacitor-F (chip)	0.1000 16V Z RECT.	チップセラ（F）			01
C0037	**US145100**	Ceramic Capacitor-F (chip)	0.1000 25V Z RECT.	チップセラ（F）			01
C0038	**US065100**	Ceramic Capacitor-F (chip)	0.100 50V Z RECT.	チップセラF			
C0038	**US135100**	Ceramic Capacitor-F (chip)	0.1000 16V Z RECT.	チップセラ（F）			01
C0038	**US145100**	Ceramic Capacitor-F (chip)	0.1000 25V Z RECT.	チップセラ（F）			01
C0039	**UN848220**	Electrolytic Cap.-BP	220.00 25.0V RX TP	BPケミコン			01
C0040	**UN848220**	Electrolytic Cap.-BP	220.00 25.0V RX TP	BPケミコン			01
C0041	**US064100**	Ceramic Capacitor-B (chip)	0.0100 50V K RECT.	チップセラ（B）			01
C0042	**US064100**	Ceramic Capacitor-B (chip)	0.0100 50V K RECT.	チップセラ（B）			01
C0043	**US062100**	Ceramic Capacitor-SL(chip)	100P 50V J RECT.	チップセラ（SL）			01
C0044	**US062100**	Ceramic Capacitor-SL(chip)	100P 50V J RECT.	チップセラ（SL）			01
C0045	**US061470**	Ceramic Capacitor-CH(chip)	47P 50V J RECT.	チップセラ（CH）			01
C0046	**US061470**	Ceramic Capacitor-CH(chip)	47P 50V J RECT.	チップセラ（CH）			01
C0049	**UR847470**	Electrolytic Cap.	47.00 25.0V RX TP	ケミコン			01
C0049	**UR857470**	Electrolytic Cap.	47.00 35.0V RX TP	ケミコン			01
C0050	**UR847470**	Electrolytic Cap.	47.00 25.0V RX TP	ケミコン			01
C0050	**UR857470**	Electrolytic Cap.	47.00 35.0V RX TP	ケミコン			01
C0051	**UR848220**	Electrolytic Cap.	220.00 25.0V RX TP	ケミコン			01
C0052	**UR848220**	Electrolytic Cap.	220.00 25.0V RX TP	ケミコン			01
C0053	**US064100**	Ceramic Capacitor-B (chip)	0.0100 50V K RECT.	チップセラ（B）			01
-0058	**US064100**	Ceramic Capacitor-B (chip)	0.0100 50V K RECT.	チップセラ（B）			01
CN001	**VB390700**	Base Post Connector	PH 11P TE	ベースポスト			01
CN003	**VB390400**	Base Post Connector	PH 8P TE	ベースポスト			01
CN004	**VB390300**	Base Post Connector	PH 7P TE	ベースポスト			01

* : New Parts

RANK : Japan only

AJACK

REF NO.	PART NO.	DESCRIPTION		部品名	REMARKS	QTY	RANK
CN006	**VB390600**	Base Post Connector	PH 10P TE	ベースポスト			01
CN007	**LB918020**	Base Post Connector	XH 2P TE	ベースツキポスト			01
D0001	**VR496500**	Diode	MA111 FLAT TP	ダイオード			
D0001	**VT332900**	Diode	1SS355 TE-17 TP	ダイオード			01
D0002	**VR496500**	Diode	MA111 FLAT TP	ダイオード			
D0002	**VT332900**	Diode	1SS355 TE-17 TP	ダイオード			01
IC001	**X3505A00**	IC	NJM2068M-D(TE2)	IC	OP AMP		02
IC002	**X3505A00**	IC	NJM2068M-D(TE2)	IC	OP AMP		02
IC003	**XT131A00**	IC	LA6517M-TRM-E	IC	OP AMP		04
JK001	**VP599300**	Pin Jack	YOKO YKC21-3120V	ピンジャック 2P	AUX OUT		02
JK002	**VL080500**	Phone Jack	YKB21-5076G	ホーンジャック	AUX IN L/L+R		02
JK003	**VS115400**	Phone Jack	LGR4609-7100F	ホーンコネクタ（黒）	AUX IN R		01
R0003	**RD355680**	Carbon Resistor (chip)	680.0 63M J RECT.	チップ抵抗			01
R0004	**RD355680**	Carbon Resistor (chip)	680.0 63M J RECT.	チップ抵抗			01
R0005	**RD356470**	Carbon Resistor (chip)	4.7K 63M J RECT.	チップ抵抗			01
R0006	**RD356470**	Carbon Resistor (chip)	4.7K 63M J RECT.	チップ抵抗			01
R0007	**RD357100**	Carbon Resistor (chip)	10.0K 63M J RECT.	チップ抵抗			01
R0008	**RD357100**	Carbon Resistor (chip)	10.0K 63M J RECT.	チップ抵抗			01
R0009	**RD350000**	Carbon Resistor (chip)	0 63M J RECT.	チップ抵抗			01
R0010	**RD350000**	Carbon Resistor (chip)	0 63M J RECT.	チップ抵抗			01
R0015	**RD357120**	Carbon Resistor (chip)	12.0K 63M J RECT.	チップ抵抗			01
R0016	**RD357120**	Carbon Resistor (chip)	12.0K 63M J RECT.	チップ抵抗			01
R0017	**RD357220**	Carbon Resistor (chip)	22.0K 63M J RECT.	チップ抵抗			01
R0018	**RD357220**	Carbon Resistor (chip)	22.0K 63M J RECT.	チップ抵抗			01
R0019	**RD350000**	Carbon Resistor (chip)	0 63M J RECT.	チップ抵抗			01
R0020	**RD350000**	Carbon Resistor (chip)	0 63M J RECT.	チップ抵抗			01
R0021	**RD357100**	Carbon Resistor (chip)	10.0K 63M J RECT.	チップ抵抗			01
R0022	**RD357100**	Carbon Resistor (chip)	10.0K 63M J RECT.	チップ抵抗			01
R0023	**RD355100**	Carbon Resistor (chip)	100.0 63M J RECT.	チップ抵抗			01
-0026	**RD355100**	Carbon Resistor (chip)	100.0 63M J RECT.	チップ抵抗			01
R0027	**RD358100**	Carbon Resistor (chip)	100.0K 63M J RECT.	チップ抵抗			01
R0028	**RD358100**	Carbon Resistor (chip)	100.0K 63M J RECT.	チップ抵抗			01
R0029	**RD357470**	Carbon Resistor (chip)	47.0K 63M J RECT.	チップ抵抗			01
R0030	**RD357470**	Carbon Resistor (chip)	47.0K 63M J RECT.	チップ抵抗			01
R0031	**RD357560**	Carbon Resistor (chip)	56.0K 63M J RECT.	チップ抵抗			01
R0032	**RD357560**	Carbon Resistor (chip)	56.0K 63M J RECT.	チップ抵抗			01
R0033	**RD350000**	Carbon Resistor (chip)	0 63M J RECT.	チップ抵抗			01
R0035	**RD350000**	Carbon Resistor (chip)	0 63M J RECT.	チップ抵抗			01
R0037	**RD354330**	Carbon Resistor (chip)	33.0 63M J RECT.	チップ抵抗			01
R0038	**RD354330**	Carbon Resistor (chip)	33.0 63M J RECT.	チップ抵抗			01
R0039	**RD356470**	Carbon Resistor (chip)	4.7K 63M J RECT.	チップ抵抗			01
-0041	**RD356470**	Carbon Resistor (chip)	4.7K 63M J RECT.	チップ抵抗			01
R0042	**RD357470**	Carbon Resistor (chip)	47.0K 63M J RECT.	チップ抵抗			01
-0045	**RD357470**	Carbon Resistor (chip)	47.0K 63M J RECT.	チップ抵抗			01
R0046	**RD355100**	Carbon Resistor (chip)	100.0 63M J RECT.	チップ抵抗			01
R0047	**RD355100**	Carbon Resistor (chip)	100.0 63M J RECT.	チップ抵抗			01
R0048	**RD357100**	Carbon Resistor (chip)	10.0K 63M J RECT.	チップ抵抗			01
R0049	**RD357100**	Carbon Resistor (chip)	10.0K 63M J RECT.	チップ抵抗			01
R0050	**RD356100**	Carbon Resistor (chip)	1.0K 63M J RECT.	チップ抵抗			01
R0051	**RD357220**	Carbon Resistor (chip)	22.0K 63M J RECT.	チップ抵抗			01
R0052	**RD356180**	Carbon Resistor (chip)	1.8K 63M J RECT.	チップ抵抗			01
R0053	**RD356470**	Carbon Resistor (chip)	4.7K 63M J RECT.	チップ抵抗			01
R0055	**RD356180**	Carbon Resistor (chip)	1.8K 63M J RECT.	チップ抵抗			01
R0056	**RD356470**	Carbon Resistor (chip)	4.7K 63M J RECT.	チップ抵抗			01
R0057	**RD357330**	Carbon Resistor (chip)	33.0K 63M J RECT.	チップ抵抗			01
R0058	**RD357330**	Carbon Resistor (chip)	33.0K 63M J RECT.	チップ抵抗			01
R0059	**RD357470**	Carbon Resistor (chip)	47.0K 63M J RECT.	チップ抵抗			01
RY001	**V8245600**	Relay	DC ATX203	リレー			04
RY001	**V8616500**	Relay	DC G6S-2	リレー 12V			04
RY002	**V8245600**	Relay	DC ATX203	リレー			04
RY002	**V8616500**	Relay	DC G6S-2	リレー 12V			04
TR001	**VJ927100**	Transistor	2SC2SC2712-Y(TE85R	トランジスタ			01
TR001	**VV556400**	Transistor	2SC2412K Q,R,S TP	トランジスタ			01
TR001	**VV925400**	Transistor (chip)	2SC2SC2712-GR(TE85	トランジスタ			01
TR001	**V4767500**	Transistor	2SD0601ARL/AQL Q,R	トランジスタ			01
TR002	**VJ927100**	Transistor	2SC2SC2712-Y(TE85R	トランジスタ			01
TR002	**VV556400**	Transistor	2SC2412K Q,R,S TP	トランジスタ			01
TR002	**VV925400**	Transistor (chip)	2SC2SC2712-GR(TE85	トランジスタ			01
TR002	**V4767500**	Transistor	2SD0601ARL/AQL Q,R	トランジスタ			01
TR003	**VJ927100**	Transistor	2SC2SC2712-Y(TE85R	トランジスタ			01

＊ : New Parts

RANK : Japan only

AJACK, DJACK and EQ

REF NO.	PART NO.	DESCRIPTION		部品名	REMARKS	QTY	RANK
TR003	**VV556400**	Transistor	2SC2412K Q,R,S TP	トランジスタ			01
TR003	**VV925400**	Transistor (chip)	2SC2SC2712-GR(TE85	トランジスタ			01
TR003	**V4767500**	Transistor	2SD0601ARL/AQL Q,R	トランジスタ			01
TR004	**V8819500**	Transistor	2SA1235A E,F TP	トランジスタ			01
TR004	**VV556500**	Transistor	2SA1037AK Q,R,S TP	トランジスタ			01
TR004	**IB070900**	Transistor	2SB709A P,Q,R,S TP	トランジスタ			01
	WE005500	Circuit Board	DJACK	DJACKシート	(WE00560)(X4470D0)		08
C0104	**US061220**	Ceramic Capacitor-CH(chip)	22P 50V J RECT.	チップセラ（CH）			01
-0106	**US061220**	Ceramic Capacitor-CH(chip)	22P 50V J RECT.	チップセラ（CH）			01
C0201	**US064100**	Ceramic Capacitor-B (chip)	0.0100 50V K RECT.	チップセラ（B）			01
C0203	**US064100**	Ceramic Capacitor-B (chip)	0.0100 50V K RECT.	チップセラ（B）			01
C0204	**UR827220**	Electrolytic Cap.	22.00 10.0V RX TP	ケミコン			01
CN102	**VB390100**	Base Post Connector	PH 5P TE	ベースポスト			01
CN201	**VB390100**	Base Post Connector	PH 5P TE	ベースポスト			01
D0201	**VV925900**	Diode	RLS-73 TE-11 TP	ダイオード			01
D0202	**VV925900**	Diode	RLS-73 TE-11 TP	ダイオード			01
IC201	**VD473200**	Photo Coupler	6N137-000E	フォトカプラ			05
J0201	**--**	Jumper Wire	0.55 TIN	ジャンパー線	(VA07890)		
-0205	**--**	Jumper Wire	0.55 TIN	ジャンパー線	(VA07890)		
J0901	**RD350000**	Carbon Resistor (chip)	0 63M J RECT.	チップ抵抗			01
-0903	**RD350000**	Carbon Resistor (chip)	0 63M J RECT.	チップ抵抗			01
J0905	**RD350000**	Carbon Resistor (chip)	0 63M J RECT.	チップ抵抗			01
J0906	**RD350000**	Carbon Resistor (chip)	0 63M J RECT.	チップ抵抗			01
J0909	**RD350000**	Carbon Resistor (chip)	0 63M J RECT.	チップ抵抗			01
JK102	**V6802600**	Jack, USB	USB 4P SE	USBジャック	TO HOST		02
JK201	**VT202500**	DIN Connector	JACK 5P YKF51-5066	DINコネクタ	MIDI IN		01
JK202	**VT202500**	DIN Connector	JACK 5P YKF51-5066	DINコネクタ	MIDI OUT		01
JK203	**VT202500**	DIN Connector	JACK 5P YKF51-5066	DINコネクタ	MIDI THRU		01
L0106	**--**	Jumper Wire	0.55 TIN	ジャンパー線	(VA07890)		
L0110	**--**	Jumper Wire	0.55 TIN	ジャンパー線	(VA07890)		
L0201	**VQ724900**	Chip Inductance	BK212 5HM601-T	チップインダクタ			01
-0206	**VQ724900**	Chip Inductance	BK212 5HM601-T	チップインダクタ			01
L0207	**VB835000**	Coil	FL05RD200AT TATETE	コイル 20U			01
R0201	**RD356100**	Carbon Resistor (chip)	1.0K 63M J RECT.	チップ抵抗			01
R0202	**RD355220**	Carbon Resistor (chip)	220.0 63M J RECT.	チップ抵抗			01
R0203	**RD357220**	Carbon Resistor (chip)	22.0K 63M J RECT.	チップ抵抗			01
R0204	**RD357220**	Carbon Resistor (chip)	22.0K 63M J RECT.	チップ抵抗			01
R0205	**RD357100**	Carbon Resistor (chip)	10.0K 63M J RECT.	チップ抵抗			01
R0206	**RD356150**	Carbon Resistor (chip)	1.5K 63M J RECT.	チップ抵抗			01
R0207	**RD355220**	Carbon Resistor (chip)	220.0 63M J RECT.	チップ抵抗			01
R0208	**RD355220**	Carbon Resistor (chip)	220.0 63M J RECT.	チップ抵抗			01
R0209	**RD357220**	Carbon Resistor (chip)	22.0K 63M J RECT.	チップ抵抗			01
R0210	**RD357220**	Carbon Resistor (chip)	22.0K 63M J RECT.	チップ抵抗			01
R0211	**RD357100**	Carbon Resistor (chip)	10.0K 63M J RECT.	チップ抵抗			01
R0212	**RD356150**	Carbon Resistor (chip)	1.5K 63M J RECT.	チップ抵抗			01
R0213	**RD355220**	Carbon Resistor (chip)	220.0 63M J RECT.	チップ抵抗			01
R0214	**RD355220**	Carbon Resistor (chip)	220.0 63M J RECT.	チップ抵抗			01
TR201	**VJ927100**	Transistor	2SC2SC2712-Y(TE85R	トランジスタ			01
TR201	**VV556400**	Transistor	2SC2412K Q,R,S TP	トランジスタ			01
TR201	**VV925400**	Transistor (chip)	2SC2SC2712-GR(TE85	トランジスタ			01
TR201	**V4767500**	Transistor	2SD0601ARL/AQL Q,R	トランジスタ			01
TR202	**VJ927100**	Transistor	2SC2SC2712-Y(TE85R	トランジスタ			01
TR202	**VV556400**	Transistor	2SC2412K Q,R,S TP	トランジスタ			01
TR202	**VV925400**	Transistor (chip)	2SC2SC2712-GR(TE85	トランジスタ			01
TR202	**V4767500**	Transistor	2SD0601ARL/AQL Q,R	トランジスタ			01
TR203	**VJ927100**	Transistor	2SC2SC2712-Y(TE85R	トランジスタ			01
TR203	**VV556400**	Transistor	2SC2412K Q,R,S TP	トランジスタ			01
TR203	**VV925400**	Transistor (chip)	2SC2SC2712-GR(TE85	トランジスタ			01
TR203	**V4767500**	Transistor	2SD0601ARL/AQL Q,R	トランジスタ			01
TR204	**VJ927100**	Transistor	2SC2SC2712-Y(TE85R	トランジスタ			01
TR204	**VV556400**	Transistor	2SC2412K Q,R,S TP	トランジスタ			01
TR204	**VV925400**	Transistor (chip)	2SC2SC2712-GR(TE85	トランジスタ			01
TR204	**V4767500**	Transistor	2SD0601ARL/AQL Q,R	トランジスタ			01
*	**WH503400**	Circuit Board	EQ	EQシート	(WH50330)(X4413A0)		
C0101	**US145100**	Ceramic Capacitor-F (chip)	0.1000 25V Z RECT.	チップセラ（F）			01
-0105	**US145100**	Ceramic Capacitor-F (chip)	0.1000 25V Z RECT.	チップセラ（F）			01
C0106	**UR847470**	Electrolytic Cap.	47.00 25.0V RX TP	ケミコン			01
C0107	**US145100**	Ceramic Capacitor-F (chip)	0.1000 25V Z RECT.	チップセラ（F）			01

＊: New Parts

RANK : Japan only

EQ

REF NO.	PART NO.	DESCRIPTION		部品名	REMARKS	QTY	RANK
-0111	**US145100**	Ceramic Capacitor-F (chip)	0.1000 25V Z RECT.	チップセラ（F）			01
C0112	**UR847470**	Electrolytic Cap.	47.00 25.0V RX TP	ケミコン			01
C0113	**US062560**	Ceramic Capacitor-SL(chip)	560P 50V J RECT.	チップセラ（SL）			01
C0114	**US062560**	Ceramic Capacitor-SL(chip)	560P 50V J RECT.	チップセラ（SL）			01
C0115	**UN866100**	Electrolytic Cap.-BP	1.00 50.0V RX TP	BPケミコン			01
C0116	**UN866100**	Electrolytic Cap.-BP	1.00 50.0V RX TP	BPケミコン			01
C0147	**US062470**	Ceramic Capacitor-SL(chip)	470P 50V J RECT.	チップセラ（SL）			01
C0148	**US062470**	Ceramic Capacitor-SL(chip)	470P 50V J RECT.	チップセラ（SL）			01
C0149	**UN847100**	Electrolytic Cap.-BP	10.00 25.0V RX TP	BPケミコン			01
C0150	**UN847100**	Electrolytic Cap.-BP	10.00 25.0V RX TP	BPケミコン			01
C0201	**VR168700**	Monolithic Mylar Capacitor	ECQ-V1H224JL3	積層マイラーコン			
C0202	**VR169400**	Monolithic Mylar Capacitor	ECQ-V1H684JL3	積層マイラーコン			
C0203	**UA654820**	Mylar Capacitor	0.0820 50V J RX TP	マイラーコン			
C0204	**VR168400**	Monolithic Mylar Capacitor	ECQ-V1H124JL3	積層マイラーコン			01
C0205	**UA654180**	Mylar Capacitor	0.0180 50V J RX TP	マイラーコン			
C0206	**VR168400**	Monolithic Mylar Capacitor	ECQ-V1H124JL3	積層マイラーコン			01
C0207	**UA654100**	Mylar Capacitor	0.0100 50V J RX TP	マイラーコン			
C0208	**VR168300**	Monolithic Mylar Capacitor	ECQ-V1H104JL3	積層マイラーコン			
C0209	**UA653680**	Mylar Capacitor	6800P 50V J RX TP	マイラーコン			
C0210	**UA654270**	Mylar Capacitor	0.0270 50V J RX TP	マイラーコン			01
C0211	**UA653390**	Mylar Capacitor	3900P 50V J RX TP	マイラーコン			01
C0212	**UA653220**	Mylar Capacitor	2200P 50V J RX TP	マイラーコン			01
C0301	**VR168700**	Monolithic Mylar Capacitor	ECQ-V1H224JL3	積層マイラーコン			
C0302	**VR169400**	Monolithic Mylar Capacitor	ECQ-V1H684JL3	積層マイラーコン			
C0303	**UA654820**	Mylar Capacitor	0.0820 50V J RX TP	マイラーコン			
C0304	**VR168400**	Monolithic Mylar Capacitor	ECQ-V1H124JL3	積層マイラーコン			01
C0305	**UA654180**	Mylar Capacitor	0.0180 50V J RX TP	マイラーコン			
C0306	**VR168400**	Monolithic Mylar Capacitor	ECQ-V1H124JL3	積層マイラーコン			01
C0307	**UA654100**	Mylar Capacitor	0.0100 50V J RX TP	マイラーコン			
C0308	**VR168300**	Monolithic Mylar Capacitor	ECQ-V1H104JL3	積層マイラーコン			
C0309	**UA653680**	Mylar Capacitor	6800P 50V J RX TP	マイラーコン			
C0310	**UA654270**	Mylar Capacitor	0.0270 50V J RX TP	マイラーコン			01
C0311	**UA653390**	Mylar Capacitor	3900P 50V J RX TP	マイラーコン			01
C0312	**UA653220**	Mylar Capacitor	2200P 50V J RX TP	マイラーコン			01
CN001	**VB390600**	Base Post Connector	PH 10P TE	ベースポスト			01
CN002	**VB390500**	Base Post Connector	PH 9P TE	ベースポスト			03
IC001	**X7351A00**	IC	UPC4570G2-E1-A	IC	OP AMP		01
IC002	**X7391A00**	IC	UPC4574G2-E1-A	IC	OP AMP		02
-005	**X7391A00**	IC	UPC4574G2-E1-A	IC	OP AMP		02
R0103	**RD356390**	Carbon Resistor (chip)	3.9K 63M J RECT.	チップ抵抗			01
R0104	**RD356390**	Carbon Resistor (chip)	3.9K 63M J RECT.	チップ抵抗			01
R0105	**RD357120**	Carbon Resistor (chip)	12.0K 63M J RECT.	チップ抵抗			01
R0106	**RD357120**	Carbon Resistor (chip)	12.0K 63M J RECT.	チップ抵抗			01
R0109	**RD356330**	Carbon Resistor (chip)	3.3K 63M J RECT.	チップ抵抗			01
R0110	**RD356330**	Carbon Resistor (chip)	3.3K 63M J RECT.	チップ抵抗			01
R0175	**RD356330**	Carbon Resistor (chip)	3.3K 63M J RECT.	チップ抵抗			01
R0176	**RD356330**	Carbon Resistor (chip)	3.3K 63M J RECT.	チップ抵抗			01
R0177	**RD357100**	Carbon Resistor (chip)	10.0K 63M J RECT.	チップ抵抗			01
R0178	**RD357100**	Carbon Resistor (chip)	10.0K 63M J RECT.	チップ抵抗			01
R0179	**RD356390**	Carbon Resistor (chip)	3.9K 63M J RECT.	チップ抵抗			01
R0180	**RD356390**	Carbon Resistor (chip)	3.9K 63M J RECT.	チップ抵抗			01
R0201	**RD356100**	Carbon Resistor (chip)	1.0K 63M J RECT.	チップ抵抗			01
R0202	**RD357180**	Carbon Resistor (chip)	18.0K 63M J RECT.	チップ抵抗			01
R0203	**RD356180**	Carbon Resistor (chip)	1.8K 63M J RECT.	チップ抵抗			01
R0204	**RD357180**	Carbon Resistor (chip)	18.0K 63M J RECT.	チップ抵抗			01
R0205	**RD356100**	Carbon Resistor (chip)	1.0K 63M J RECT.	チップ抵抗			01
R0206	**RD357180**	Carbon Resistor (chip)	18.0K 63M J RECT.	チップ抵抗			01
R0207	**RD355220**	Carbon Resistor (chip)	220.0 63M J RECT.	チップ抵抗			01
R0208	**RD357180**	Carbon Resistor (chip)	18.0K 63M J RECT.	チップ抵抗			01
R0209	**RD355470**	Carbon Resistor (chip)	470.0 63M J RECT.	チップ抵抗			01
R0210	**RD357180**	Carbon Resistor (chip)	18.0K 63M J RECT.	チップ抵抗			01
R0211	**RD357180**	Carbon Resistor (chip)	18.0K 63M J RECT.	チップ抵抗			01
R0212	**RD356180**	Carbon Resistor (chip)	1.8K 63M J RECT.	チップ抵抗			01
R0301	**RD356100**	Carbon Resistor (chip)	1.0K 63M J RECT.	チップ抵抗			01
R0302	**RD357180**	Carbon Resistor (chip)	18.0K 63M J RECT.	チップ抵抗			01
R0303	**RD356180**	Carbon Resistor (chip)	1.8K 63M J RECT.	チップ抵抗			01
R0304	**RD357180**	Carbon Resistor (chip)	18.0K 63M J RECT.	チップ抵抗			01
R0305	**RD356100**	Carbon Resistor (chip)	1.0K 63M J RECT.	チップ抵抗			01
R0306	**RD357180**	Carbon Resistor (chip)	18.0K 63M J RECT.	チップ抵抗			01
R0307	**RD355220**	Carbon Resistor (chip)	220.0 63M J RECT.	チップ抵抗			01

＊ : New Parts

RANK : Japan only

EQ, FU60 and GH3_EBUS L

	REF NO.	PART NO.	DESCRIPTION		部品名	REMARKS	QTY	RANK
	R0308	**RD357180**	Carbon Resistor (chip)	18.0K 63M J RECT.	チップ抵抗			01
	R0309	**RD355470**	Carbon Resistor (chip)	470.0 63M J RECT.	チップ抵抗			01
	R0310	**RD357180**	Carbon Resistor (chip)	18.0K 63M J RECT.	チップ抵抗			01
	R0311	**RD357180**	Carbon Resistor (chip)	18.0K 63M J RECT.	チップ抵抗			01
	R0312	**RD356180**	Carbon Resistor (chip)	1.8K 63M J RECT.	チップ抵抗			01
	R0401	**RD357470**	Carbon Resistor (chip)	47.0K 63M J RECT.	チップ抵抗			01
	-0409	**RD357470**	Carbon Resistor (chip)	47.0K 63M J RECT.	チップ抵抗			01
	R0413	**RD355560**	Carbon Resistor (chip)	560.0 63M J RECT.	チップ抵抗			01
	-0419	**RD355560**	Carbon Resistor (chip)	560.0 63M J RECT.	チップ抵抗			01
	R0501	**RD357470**	Carbon Resistor (chip)	47.0K 63M J RECT.	チップ抵抗			01
	-0509	**RD357470**	Carbon Resistor (chip)	47.0K 63M J RECT.	チップ抵抗			01
	R0513	**RD355560**	Carbon Resistor (chip)	560.0 63M J RECT.	チップ抵抗			01
	-0519	**RD355560**	Carbon Resistor (chip)	560.0 63M J RECT.	チップ抵抗			01
	R0603	**RD350000**	Carbon Resistor (chip)	0 63M J RECT.	チップ抵抗			01
	R0703	**RD350000**	Carbon Resistor (chip)	0 63M J RECT.	チップ抵抗			01
		VT151500	Circuit Board	FU60	FU60シート	U (VT15180) (XQ395A0)(XQ395B0) (XQ779A0)(XQ779B0)		07
		VT151600	Circuit Board	FU60	FU60シート	E,B,K (VT15190) (XQ395B0)(XQ779B0)		07
		VT152900	Circuit Board	FU60	FU60シート	N (VT15320) (XQ395A0)(XQ395B0) (XQ779A0)(XQ779B0)		09
⚠		**VT139600**	Voltage Selector	M1684-E	電圧切替器	N		04
⚠		**VT308200**	Inlet	CCT9302-0201F	ACインレット 2P	U		02
		--	Jumper Wire	0.55 TIN	ジャンパー線	(VD04170)		
⚠	C0001	**V7682800**	Capacitor	0.010 VA1 J.U.C.S	規格認定コン KH			01
⚠	C0002	**V7683000**	Capacitor	4700P 250V J.U.C.S	規格認定コン KH			01
⚠	C0003	**V7683000**	Capacitor	4700P 250V J.U.C.S	規格認定コン KH			01
	CN001	**LB932030**	Base Post Connector	VH 3P TE	ベースポスト			01
	CN002	**LB932060**	Base Post Connector	VH 6P TE	ベースポスト			01
⚠	F0001	**KB003590**	Fuse	TAIRATSUSHU 3.00A	ヒューズ	U,N		01
⚠	F0001	**WG493700**	Fuse	TAIMURAGU 3.00A JU	ヒューズ	U,N		01
⚠	F0001	**KB001660**	Fuse	T L 1.60A S	ヒューズ	E,B,K		01
⚠	F0002	**KB001660**	Fuse	T L 1.60A S	ヒューズ	N		01
⚠	F0002	**KB003060**	Fuse	TL 1.60A S	ヒューズ	N		01
⚠	F0003	**KB001660**	Fuse	T L 1.60A S	ヒューズ	N		01
⚠	F0003	**KB003060**	Fuse	TL 1.60A S	ヒューズ	N		01
	FUHOL	**LB201530**	Fuse Holder	PC-PH1	ヒューズホルダ	U,E,B,K	2	01
*	FUHOL	**WC374700**	Fuse Holder	PIN TYPE PC-FH1	ヒューズホルダ		2	
	FUHOL	**LB201530**	Fuse Holder	PC-PH1	ヒューズホルダ	N	6	01
*	FUHOL	**WC374700**	Fuse Holder	PIN TYPE PC-FH1	ヒューズホルダ		6	
	FUHOL	**WC050700**	Fuse Clip	CLIP EYF52BCY	ヒューズクリップ	U,E,B,K	2	01
	FUHOL	**WC050700**	Fuse Clip	CLIP EYF52BCY	ヒューズクリップ	N	6	01
⚠	INLET	**VT308100**	Inlet	CCT9302-0101F	ACインレット 2P	E,B,K,N		02
⚠	INLET	**--**	Inlet	INLET CCT9302-0102	ACインレット 2P	E,B,K,N (WH96520)		
	J0001	**--**	Jumper Wire	0.55 TIN	ジャンパー線	U,E,B,K (VD04170)		
	L0001	**--**	Jumper Wire	0.55 TIN	ジャンパー線	(VD04170)		
	L0002	**--**	Jumper Wire	0.55 TIN	ジャンパー線	(VD04170)		
⚠	L0003	**VF790900**	Coil	SU10V-D20010	コイル 10U			03
		V8904600	Circuit Board	GH3_EBUS L	GH3_EBUSシートL	(X2177D0)		18
		--	Nonwoven Fabric Cloth		不織布	(V846980)		
	C0001	**UF037100**	Electrolytic Cap. (chip)	10 16V	チップケミコン			01
	C0002	**US135100**	Ceramic Capacitor-F (chip)	0.1000 16V Z RECT.	チップセラ(F)			01
	-0005	**US135100**	Ceramic Capacitor-F (chip)	0.1000 16V Z RECT.	チップセラ(F)			01
	C0006	**US063100**	Ceramic Capacitor-B (chip)	1000P 50V K RECT.	チップセラ(B)			01
	C0007	**US063100**	Ceramic Capacitor-B (chip)	1000P 50V K RECT.	チップセラ(B)			01
	C0010	**US063100**	Ceramic Capacitor-B (chip)	1000P 50V K RECT.	チップセラ(B)			01
	CN002	**VK025100**	Wire Trap	52147 7P TE	ワイヤートラップ			01
	D0007	**VT332900**	Diode	1SS355 TE-17 TP	ダイオード			01
	-0096	**VT332900**	Diode	1SS355 TE-17 TP	ダイオード			01
	IC001	**X2599200**	IC	UPD780031AYGK-N06-	IC	E-TKS		06
	R0001	**RD350000**	Carbon Resistor (chip)	0 63M J RECT.	チップ抵抗			01
	R0002	**RD350000**	Carbon Resistor (chip)	0 63M J RECT.	チップ抵抗			01
	R0003	**RD356100**	Carbon Resistor (chip)	1.0K 63M J RECT.	チップ抵抗			01
	R0004	**RD356100**	Carbon Resistor (chip)	1.0K 63M J RECT.	チップ抵抗			01
	R0005	**RD354470**	Carbon Resistor (chip)	47.0 63M J RECT.	チップ抵抗			01
	R0006	**RD354470**	Carbon Resistor (chip)	47.0 63M J RECT.	チップ抵抗			01

＊ : New Parts

RANK : Japan only

GH3_EBUS L, GH3_EBUS M, GH3_EBUS H and HP

REF NO.	PART NO.	DESCRIPTION		部品名	REMARKS	QTY	RANK
R0007	**RD356100**	Carbon Resistor (chip)	1.0K 63M J RECT.	チップ抵抗			01
R0008	**RD350000**	Carbon Resistor (chip)	0 63M J RECT.	チップ抵抗			01
-0015	**RD350000**	Carbon Resistor (chip)	0 63M J RECT.	チップ抵抗			01
R0016	**RD357100**	Carbon Resistor (chip)	10.0K 63M J RECT.	チップ抵抗			01
RA001	**RE047100**	Resistor Array	10KX4	抵抗アレイ			01
-008	**RE047100**	Resistor Array	10KX4	抵抗アレイ			01
X0001	**V6150500**	Ceramic Resonator	8.38M EFOS8384E5	セラミック振動子			01
	V8904700	Circuit Board	GH3_EBUS M	GH3_EBUSシートM	(X2178E0)		18
	--	Nonwoven Fabric Cloth		不織布	(V846990)		
C0001	**UF037100**	Electrolytic Cap. (chip)	10 16V	チップケミコン			01
C0002	**US135100**	Ceramic Capacitor-F (chip)	0.1000 16V Z RECT.	チップセラ(F)			01
-0005	**US135100**	Ceramic Capacitor-F (chip)	0.1000 16V Z RECT.	チップセラ(F)			01
C0006	**US063100**	Ceramic Capacitor-B (chip)	1000P 50V K RECT.	チップセラ(B)			01
C0007	**US063100**	Ceramic Capacitor-B (chip)	1000P 50V K RECT.	チップセラ(B)			01
C0010	**US063100**	Ceramic Capacitor-B (chip)	1000P 50V K RECT.	チップセラ(B)			01
CN001	**VK025100**	Wire Trap	52147 7P TE	ワイヤートラップ			01
CN002	**VB390300**	Base Post Connector	PH 7P TE	ベースポスト			01
CN004	**VK025100**	Wire Trap	52147 7P TE	ワイヤートラップ			01
D0001	**VT332900**	Diode	1SS355 TE-17 TP	ダイオード			01
-0096	**VT332900**	Diode	1SS355 TE-17 TP	ダイオード			01
IC001	**X2599200**	IC	UPD780031AYGK-N06-	IC	E-TKS		06
R0001	**RD350000**	Carbon Resistor (chip)	0 63M J RECT.	チップ抵抗			01
R0002	**RD350000**	Carbon Resistor (chip)	0 63M J RECT.	チップ抵抗			01
R0003	**RD356100**	Carbon Resistor (chip)	1.0K 63M J RECT.	チップ抵抗			01
R0004	**RD356100**	Carbon Resistor (chip)	1.0K 63M J RECT.	チップ抵抗			01
R0005	**RD354470**	Carbon Resistor (chip)	47.0 63M J RECT.	チップ抵抗			01
R0006	**RD354470**	Carbon Resistor (chip)	47.0 63M J RECT.	チップ抵抗			01
R0007	**RD356100**	Carbon Resistor (chip)	1.0K 63M J RECT.	チップ抵抗			01
R0008	**RD350000**	Carbon Resistor (chip)	0 63M J RECT.	チップ抵抗			01
R0009	**RD350000**	Carbon Resistor (chip)	0 63M J RECT.	チップ抵抗			01
R0011	**RD350000**	Carbon Resistor (chip)	0 63M J RECT.	チップ抵抗			01
-0015	**RD350000**	Carbon Resistor (chip)	0 63M J RECT.	チップ抵抗			01
R0016	**RD357100**	Carbon Resistor (chip)	10.0K 63M J RECT.	チップ抵抗			01
RA001	**RE047100**	Resistor Array	10KX4	抵抗アレイ			01
-008	**RE047100**	Resistor Array	10KX4	抵抗アレイ			01
X0001	**V6150500**	Ceramic Resonator	8.38M EFOS8384E5	セラミック振動子			01
	V8904800	Circuit Board	GH3_EBUS H	GH3_EBUSシートH	(X2179D0)		18
	--	Nonwoven Fabric Cloth		不織布	(V847000)		
C0001	**UF037100**	Electrolytic Cap. (chip)	10 16V	チップケミコン			01
C0002	**US135100**	Ceramic Capacitor-F (chip)	0.1000 16V Z RECT.	チップセラ(F)			01
-0005	**US135100**	Ceramic Capacitor-F (chip)	0.1000 16V Z RECT.	チップセラ(F)			01
C0006	**US063100**	Ceramic Capacitor-B (chip)	1000P 50V K RECT.	チップセラ(B)			01
C0007	**US063100**	Ceramic Capacitor-B (chip)	1000P 50V K RECT.	チップセラ(B)			01
C0010	**US063100**	Ceramic Capacitor-B (chip)	1000P 50V K RECT.	チップセラ(B)			01
CN002	**VK025100**	Wire Trap	52147 7P TE	ワイヤートラップ			01
D0001	**VT332900**	Diode	1SS355 TE-17 TP	ダイオード			01
-0096	**VT332900**	Diode	1SS355 TE-17 TP	ダイオード			01
IC001	**X2599200**	IC	UPD780031AYGK-N06-	IC	E-TKS		06
R0001	**RD350000**	Carbon Resistor (chip)	0 63M J RECT.	チップ抵抗			01
R0002	**RD350000**	Carbon Resistor (chip)	0 63M J RECT.	チップ抵抗			01
R0003	**RD356100**	Carbon Resistor (chip)	1.0K 63M J RECT.	チップ抵抗			01
R0004	**RD356100**	Carbon Resistor (chip)	1.0K 63M J RECT.	チップ抵抗			01
R0005	**RD354470**	Carbon Resistor (chip)	47.0 63M J RECT.	チップ抵抗			01
R0006	**RD354470**	Carbon Resistor (chip)	47.0 63M J RECT.	チップ抵抗			01
R0007	**RD356100**	Carbon Resistor (chip)	1.0K 63M J RECT.	チップ抵抗			01
R0008	**RD350000**	Carbon Resistor (chip)	0 63M J RECT.	チップ抵抗			01
-0010	**RD350000**	Carbon Resistor (chip)	0 63M J RECT.	チップ抵抗			01
R0012	**RD350000**	Carbon Resistor (chip)	0 63M J RECT.	チップ抵抗			01
-0015	**RD350000**	Carbon Resistor (chip)	0 63M J RECT.	チップ抵抗			01
R0016	**RD357100**	Carbon Resistor (chip)	10.0K 63M J RECT.	チップ抵抗			01
RA001	**RE047100**	Resistor Array	10KX4	抵抗アレイ			01
-008	**RE047100**	Resistor Array	10KX4	抵抗アレイ			01
X0001	**V6150500**	Ceramic Resonator	8.38M EFOS8384E5	セラミック振動子			01
	WC045900	Circuit Board	HP	HPシート	(WC04580) (XQ389A0)(XQ390A0)		05
C0001	**FG414100**	Ceramic Capacitor-B	0.01UF 50V K	セラコンB			
C0001	**FG644100**	Electrolytic Cap.	0.0100 50V Z RX TP	セラコン(F)			01

＊ : New Parts

RANK : Japan only

HP and MA80S

REF NO.	PART NO.	DESCRIPTION		部品名	REMARKS	QTY	RANK
C0002	**FG414100**	Ceramic Capacitor-B	0.01UF 50V K	セラコンB			
C0002	**FG644100**	Electrolytic Cap.	0.0100 50V Z RX TP	セラコン(F)			01
C0003	**FG414100**	Ceramic Capacitor-B	0.01UF 50V K	セラコンB			
C0003	**FG644100**	Electrolytic Cap.	0.0100 50V Z RX TP	セラコン(F)			01
C0004	**FG414100**	Ceramic Capacitor-B	0.01UF 50V K	セラコンB			
C0004	**FG644100**	Electrolytic Cap.	0.0100 50V Z RX TP	セラコン(F)			01
C0005	**FG414100**	Ceramic Capacitor-B	0.01UF 50V K	セラコンB			
C0005	**FG644100**	Electrolytic Cap.	0.0100 50V Z RX TP	セラコン(F)			01
C0006	**--**	Jumper Wire	0.55 TIN	ジャンパー線	(VD04170)		
C0007	**--**	Jumper Wire	0.55 TIN	ジャンパー線	(VD04170)		
CN001	**VB858600**	Base Post Connector	PH 7P SE	ベースポスト			01
CN002	**VB858100**	Base Post Connector	PH 2P SE	ベースポスト			01
FL001	**VB835000**	Coil	FL05RD200AT TATETE	コイル20U			01
FL001	**VB971100**	Coil	FL05RD200A TATEJI	コイル20U			01
FL002	**VB835000**	Coil	FL05RD200AT TATETE	コイル20U			01
FL002	**VB971100**	Coil	FL05RD200A TATEJI	コイル20U			01
FL003	**V3085000**	Choke Coil	R-5C TE-	チョークコイル10U			
FL003	**V3085100**	Choke Coil	R-5C BARA	チョークコイル10U			
FL004	**VB835000**	Coil	FL05RD200AT TATETE	コイル20U			01
FL004	**VB971100**	Coil	FL05RD200A TATEJI	コイル20U			01
FL005	**VB835000**	Coil	FL05RD200AT TATETE	コイル20U			01
FL005	**VB971100**	Coil	FL05RD200A TATEJI	コイル20U			01
FL006	**V3085000**	Choke Coil	R-5C TE-	チョークコイル10U			
FL006	**V3085100**	Choke Coil	R-5C BARA	チョークコイル10U			
HP001	**LB101870**	Phone Jack	YKB21-5006	ホーンコネクタ	PHONES		03
HP001	**WJ306200**	Phone Jack	MSJ-064-15A B AG	ホーンコネクタ			
HP002	**LB101870**	Phone Jack	JACK YKB21-5006	ホーンコネクタ	PHONES		03
HP002	**WJ306200**	Phone Jack	MSJ-064-15A B AG	ホーンコネクタ			
R0001	**V9295000**	Carbon Resistor	33.0 1/2 J YOKOSUT	カーボン抵抗			01
R0001	**V9458700**	Carbon Resistor	33.0 1/2 J TP	カーボン抵抗			
R0002	**V9295000**	Carbon Resistor	33.0 1/2 J YOKOSUT	カーボン抵抗			01
R0002	**V9458700**	Carbon Resistor	33.0 1/2 J TP	カーボン抵抗			
R0003	**V9295000**	Carbon Resistor	33.0 1/2 J YOKOSUT	カーボン抵抗			01
R0003	**V9458700**	Carbon Resistor	33.0 1/2 J TP	カーボン抵抗			
R0004	**V9295000**	Carbon Resistor	33.0 1/2 J YOKOSUT	カーボン抵抗			01
R0004	**V9458700**	Carbon Resistor	33.0 1/2 J TP	カーボン抵抗			
R0005	**--**	Jumper Wire	0.55 TIN	ジャンパー線	(VD04170)		
WH001	**VT890700**	Connector Assembly	CVP59,69	アース束線150			01
	--	Circuit Board	MA80S	MA80Sシート	U (WB55440)(WB55500) (X4384D0)(X4384E0)		
	--	Circuit Board	MA80S	MA80Sシート	E,B,N,K(WC03060)(WC03050) (X4384E0)		
	VT740000	Support, PCB	3T-9 SHINAGAWA	三端子用スペーサー		2	03
	--	Grease	X-113A G746	シリコングリス	(VA79810)		
	--	Insulation Sheet	PT-SS	放熱シート(P)	(WE75290)		
	--	Jumper Wire	0.55 TIN	ジャンパー線	(VD04170)	38	
⚠	FS1	**KB003630**	Fuse	TAIRATSUSHU 5.00A	ヒューズ	U	01
⚠	FS1	**WG410400**	Fuse	5A JU	ヒューズ		01
⚠	FS1	**KB000780**	Fuse	T L 5.00A S	ヒューズ	E,B,N,K	02
⚠	FS2	**KB003630**	Fuse	TAIRATSUSHU 5.00A	ヒューズ	U	01
⚠	FS2	**WG410400**	Fuse	5A JU	ヒューズ		01
⚠	FS2	**KB000780**	Fuse	T L 5.00A S	ヒューズ	E,B,N,K	02
⚠	FS3	**KB003630**	Fuse	TAIRATSUSHU 5.00A	ヒューズ	U	01
⚠	FS3	**WG410400**	Fuse	5A JU	ヒューズ		01
⚠	FS3	**KB000780**	Fuse	T L 5.00A S	ヒューズ	E,B,N,K	02
	C0001	**V7545000**	Monolithic Ceramic Cap.	0.022 250V K RECT.	チップ積層セラコン		01
	-0003	**V7545000**	Monolithic Ceramic Cap.	0.022 250V K RECT.	チップ積層セラコン		01
	C0005	**VL232400**	Electrolytic Cap.	3300 35.0V TATEJI	ケミコン		04
	-0008	**VL232400**	Electrolytic Cap.	3300 35.0V TATEJI	ケミコン		04
	C0009	**US145100**	Ceramic Capacitor-F (chip)	0.1000 25V Z RECT.	チップセラ(F)		01
	C0010	**US063100**	Ceramic Capacitor-B (chip)	1000P 50V K RECT.	チップセラ(B)		01
	C0011	**UN866100**	Electrolytic Cap.-BP	1.00 50.0V RX TP	BPケミコン		01
	C0012	**US062220**	Ceramic Capacitor-SL(chip)	220P 50V J RECT.	チップセラ(SL)		01
	C0013	**UR838100**	Electrolytic Cap.	100.00 16.0V RX TP	ケミコン		01
	C0015	**UR868100**	Electrolytic Cap.	100.00 50.0V RX TP	ケミコン		01
	C0016	**UR867100**	Electrolytic Cap.	10.00 50.0V RX TP	ケミコン		01
	C0017	**UR867100**	Electrolytic Cap.	10.00 50.0V RX TP	ケミコン		01
	C0018	**UR868100**	Electrolytic Cap.	100.00 50.0V RX TP	ケミコン		01
	C0019	**V5333500**	Ceramic Capacitor (chip)	10.0 6.3V K RECT.	チップセラ(B)		01

＊: New Parts

RANK : Japan only

MA80S

REF NO.	PART NO.	DESCRIPTION		部品名	REMARKS	QTY	RANK
C0020	**UR838100**	Electrolytic Cap.	100.00 16.0V RX TP	ケミコン			01
C0021	**US062220**	Ceramic Capacitor-SL(chip)	220P 50V J RECT.	チップセラ（ＳＬ）			01
C0022	**US063100**	Ceramic Capacitor-B (chip)	1000P 50V K RECT.	チップセラ（Ｂ）			01
C0023	**UN866100**	Electrolytic Cap.-BP	1.00 50.0V RX TP	ＢＰケミコン			01
C0025	**US145100**	Ceramic Capacitor-F (chip)	0.1000 25V Z RECT.	チップセラ（Ｆ）			01
-0028	**US145100**	Ceramic Capacitor-F (chip)	0.1000 25V Z RECT.	チップセラ（Ｆ）			01
C0029	**UN838100**	Electrolytic Cap.-BP	100.00 16.0V RX TP	ＢＰケミコン			01
C0030	**V5333500**	Ceramic Capacitor (chip)	10.0 6.3V K RECT.	チップセラ（Ｂ）			01
C0031	**VL232300**	Electrolytic Cap.	2200 25.0V TATEJI	ケミコン			03
C0032	**VL232300**	Electrolytic Cap.	2200 25.0V TATEJI	ケミコン			03
C0033	**UR866100**	Electrolytic Cap.	1.00 50.0V RX TP	ケミコン			01
-0036	**UR866100**	Electrolytic Cap.	1.00 50.0V RX TP	ケミコン			01
C0037	**US145100**	Ceramic Capacitor-F (chip)	0.1000 25V Z RECT.	チップセラ（Ｆ）			01
-0040	**US145100**	Ceramic Capacitor-F (chip)	0.1000 25V Z RECT.	チップセラ（Ｆ）			01
C0041	**VL232400**	Electrolytic Cap.	3300 35.0V TATEJI	ケミコン			04
C0043	**US145100**	Ceramic Capacitor-F (chip)	0.1000 25V Z RECT.	チップセラ（Ｆ）			01
C0047	**UR866330**	Electrolytic Cap.	3.30 50.0V RX TP	ケミコン			01
C0051	**VL232400**	Electrolytic Cap.	3300 35.0V TATEJI	ケミコン			04
C0052	**WB477000**	Electrolytic Capacitor-ZL	330.00 35.0V RX TP	ケミコンＺＬ			01
C0052	**WC303700**	Electrolytic Capacitor-KZE	330.00 35.0V RX TP	ケミコンＫＺＥ			01
C0054	**WB476900**	Electrolytic Capacitor-ZL	470.00 16.0V RX TP	ケミコンＺＬ			01
C0054	**WC303600**	Electrolytic Capacitor-KZE	470.00 16.0V RX TP	ケミコンＫＺＥ			01
C0055	**WB476900**	Electrolytic Capacitor-ZL	470.00 16.0V RX TP	ケミコンＺＬ			01
C0055	**WC303600**	Electrolytic Capacitor-KZE	470.00 16.0V RX TP	ケミコンＫＺＥ			01
C0059	**US061270**	Ceramic Capacitor-CH(chip)	27P 50V J RECT.	チップセラ（ＣＨ）			01
C0060	**US061270**	Ceramic Capacitor-CH(chip)	27P 50V J RECT.	チップセラ（ＣＨ）			01
CN001	**LB932080**	Base Post Connector	VH 8P TE	ベースポスト			01
CN003	**VB390000**	Base Post Connector	PH 4P TE	ベースポスト			01
CN004	**LB918040**	Base Post Connector	XH 4P TE	ベースツキポスト			01
CN005	**LB932040**	Base Post Connector	VH 4P TE	ベースポスト			01
CN006	**VB390500**	Base Post Connector	PH 9P TE	ベースポスト			03
CN008	**LB918020**	Base Post Connector	XH 2P TE	ベースツキポスト			01
CN009	**LB918040**	Base Post Connector	XH 4P TE	ベースツキポスト			01
CN010	**VB390000**	Base Post Connector	PH 4P TE	ベースポスト			01
D0001	**WB520600**	Diode	10EDB40-TA2B5 TE-5	ダイオード			01
D0001	**WD009700**	Diode	10EDB40-TA1B2 TE-2	ダイオード			
D0002	**WB520600**	Diode	10EDB40-TA2B5 TE-5	ダイオード			01
D0002	**WD009700**	Diode	10EDB40-TA1B2 TE-2	ダイオード			
D0003	**VT332900**	Diode	1SS355 TE-17 TP	ダイオード			01
-0005	**VT332900**	Diode	1SS355 TE-17 TP	ダイオード			01
D0008	**VT332900**	Diode	1SS355 TE-17 TP	ダイオード			01
D0009	**VT332900**	Diode	1SS355 TE-17 TP	ダイオード			01
DB001	**VQ111500**	Diode Stack	D3SBA20-7103 4.0A	ダイオードスタック			03
DB002	**VQ111500**	Diode Stack	D3SBA20-7103 4.0A	ダイオードスタック			03
DB003	**VR253700**	Diode Stack	S1NB20 1.0A 200V	ダイオードスタック			02
F0001	**WC050700**	Fuse Clip	CLIP EYF52BCY	ヒューズクリップ		2	01
-0003	**WC050700**	Fuse Clip	CLIP EYF52BCY	ヒューズクリップ		2	01
IC003	**XJ602A00**	IC	NJM78M12FA	Ｉ　　Ｃ	REGULATOR +12V		02
IC004	**XD343A00**	IC	NJM79M12FA	Ｉ　　Ｃ	REGULATOR -12V		03
IC006	**X4375A00**	IC	STK402-040S	Ｉ　　Ｃ	POWER AMP 25W 2CH		07
IC007	**X4404A00**	IC	MPD6S004S	Ｉ　　Ｃ	DC-DC CONVERTER		09
J0004	**--**	Jumper Wire	0.55 TIN	ジャンパー線	(VD04170)		
-0006	**--**	Jumper Wire	0.55 TIN	ジャンパー線	(VD04170)		
⚠ R0001	**VU253100**	Fuse Resistor	0.47 1/2 J JIRITSU	ヒューズ抵抗			01
⚠ R0002	**VU253100**	Fuse Resistor	0.47 1/2 J JIRITSU	ヒューズ抵抗			01
R0003	**RD156100**	Carbon Resistor (chip)	1.0K 1/4 J TP	チップ抵抗			
R0005	**RD356470**	Carbon Resistor (chip)	4.7K 63M J RECT.	チップ抵抗			01
R0006	**RD357100**	Carbon Resistor (chip)	10.0K 63M J RECT.	チップ抵抗			01
R0007	**RD356220**	Carbon Resistor (chip)	2.2K 63M J RECT.	チップ抵抗			01
R0010	**RD355560**	Carbon Resistor (chip)	560.0 63M J RECT.	チップ抵抗			01
R0011	**RD357100**	Carbon Resistor (chip)	10.0K 63M J RECT.	チップ抵抗			01
R0012	**RD355390**	Carbon Resistor (chip)	390.0 63M J RECT.	チップ抵抗			01
R0013	**RD357120**	Carbon Resistor (chip)	12.0K 63M J RECT.	チップ抵抗			01
R0014	**HW095100**	Fuse Resistor	100.0 1/4 J	ヒューズ抵抗			01
R0015	**RD157100**	Carbon Resistor (chip)	10.0K 1/4 J TP	チップ抵抗			01
R0020	**HW095100**	Fuse Resistor	100.0 1/4 J	ヒューズ抵抗			01
R0021	**RD357120**	Carbon Resistor (chip)	12.0K 63M J RECT.	チップ抵抗			01
R0022	**RD355390**	Carbon Resistor (chip)	390.0 63M J RECT.	チップ抵抗			01
R0023	**RD355560**	Carbon Resistor (chip)	560.0 63M J RECT.	チップ抵抗			01
R0024	**RD357100**	Carbon Resistor (chip)	10.0K 63M J RECT.	チップ抵抗			01

＊ : New Parts

RANK : Japan only

MA80S, NET1, PEDAL, PEDAL VR, PJK, PL and PNL

REF NO.	PART NO.	DESCRIPTION		部品名	REMARKS	QTY	RANK
R0027	**VC742500**	Metal Oxide Film Resistor	10.0 1W J	酸化金属被膜抵抗			01
R0028	**VC742500**	Metal Oxide Film Resistor	10.0 1W J	酸化金属被膜抵抗			01
R0029	**RD157100**	Carbon Resistor (chip)	10.0K 1/4 J TP	チップ抵抗			01
R0030	**RD157100**	Carbon Resistor (chip)	10.0K 1/4 J TP	チップ抵抗			01
R0031	**RD356120**	Carbon Resistor (chip)	1.2K 63M J RECT.	チップ抵抗			01
R0032	**RD357470**	Carbon Resistor (chip)	47.0K 63M J RECT.	チップ抵抗			01
R0033	**--**	Jumper Wire	0.55 TIN	ジャンパー線	(VD04170)		
-0036	**--**	Jumper Wire	0.55 TIN	ジャンパー線	(VD04170)		
R0045	**RD350000**	Carbon Resistor (chip)	0 63M J RECT.	チップ抵抗			01
RY001	**WB476400**	Relay	DC G5PA-28	リレー 12V			03
TR002	**VV556400**	Transistor	2SC2412K Q,R,S TP	トランジスタ			01
-004	**VV556400**	Transistor	2SC2412K Q,R,S TP	トランジスタ			01
TR008	**VV556400**	Transistor	2SC2412K Q,R,S TP	トランジスタ			01
TR009	**VV556400**	Transistor	2SC2412K Q,R,S TP	トランジスタ			01
	WC175500	Circuit Board	NET1	NET1シート	(WC17540)(XT123B0)		04
	--	Jumper Wire	0.55 TIN	ジャンパー線	(VD04170)	2	
C0003	**V5928200**	Electrolytic Cap.-BP	1.50 63.0V TATEJI	BPケミコン			01
C0004	**V5928200**	Electrolytic Cap.-BP	1.50 63.0V TATEJI	BPケミコン			01
CN001	**LB932040**	Base Post Connector	VH 4P TE	ベースポスト			01
CN002	**LB932050**	Base Post Connector	VH 5P TE	ベースポスト			01
CN003	**LB918050**	Base Post Connector	XH 5P TE	ベーススツキポスト			01
	WB970400	Circuit Board	PEDAL	ペダルシート	(WB97030)(XR780C0)		08
	WB970500	Circuit Board	PEDAL VR	ペダルVRシート	(WB97030)(XR780C0)		07
	VB858500	Base Post Connector	PH 6P SE	ベースポスト			01
	HS412520	Rotary Variable Resistor	B 10.0K RK16Y11L00	ロータリーVR1連			05
	--	Jumper Wire	0.55 TIN	ジャンパー線	(VD04170)	3	
	--	GND Wire		アース束線	(VZ01760)		
	WC561200	Circuit Board	PJK	PJKシート	(WC56110)(X5143A0)		04
C0001	**US062100**	Ceramic Capacitor-SL(chip)	100P 50V J RECT.	チップセラ（SL）			01
-0004	**US062100**	Ceramic Capacitor-SL(chip)	100P 50V J RECT.	チップセラ（SL）			01
CN001	**VB390100**	Base Post Connector	PH 5P TE	ベースポスト			01
D0001	**VV925900**	Diode	RLS-73 TE-11 TP	ダイオード			01
-0006	**VV925900**	Diode	RLS-73 TE-11 TP	ダイオード			01
JK001	**V4874800**	Connector,Mini DIN	DINJATSUKU6P MD-S6	ミニDINコネクタ	PEDAL		02
L0001	**VQ724900**	Chip Inductance	BK212 5HM601-T	チップインダクタ			01
-0004	**VQ724900**	Chip Inductance	BK212 5HM601-T	チップインダクタ			01
	VN637600	Circuit Board	PL	PLシート	(VN63740)(XL151B0)		03
	VB858100	Base Post Connector	PH 2P SE	ベースポスト			01
	VD180000	LED	SLZ-190B-03-T2 AKA	LEDテー．フォ	POWER		01
	VU659100	Circuit Board	PL	PLシート	(VU65900)(XR898A0)		03
	VB858100	Base Post Connector	PH 2P SE	ベースポスト			01
	VD180000	LED	SLZ-190B-03-T2 AKA	LEDテー．フォ	POWER		01
	WE089800	Circuit Board	PNL	PNLシート	(WE08970)(X5955C0)		07
	--	Jumper Wire	0.55 TIN	ジャンパー線	(VA07890)	25	
CN101	**VB858700**	Base st Connector	PH 8P SE	ベースポスト			01
CN201	**VB858800**	Base Post Connector	PH 9P SE	ベースポスト			01
CN301	**VB858600**	Base Post Connector	PH 7P SE	ベースポスト			01
D0001	**VD631600**	Diode	1SS133,176,HSS104	ダイオード			01
-0004	**VD631600**	Diode	1SS133,176,HSS104	ダイオード			01
D0011	**VD631600**	Diode	1SS133,176,HSS104	ダイオード			01
D0012	**VD631600**	Diode	1SS133,176,HSS104	ダイオード			01
D0014	**VD631600**	Diode	1SS133,176,HSS104	ダイオード			01
D0021	**VD631600**	Diode	1SS133,176,HSS104	ダイオード			01
-0024	**VD631600**	Diode	1SS133,176,HSS104	ダイオード			01
D0031	**VD631600**	Diode	1SS133,176,HSS104	ダイオード			01
-0033	**VD631600**	Diode	1SS133,176,HSS104	ダイオード			01
LD004	**V8066800**	LED	SML72423C TP15	LED2色テー	LEFT		01
LD006	**V8066800**	LED	SML72423C TP15	LED2色テー	RIGHT		01
LD014	**VU067800**	LED	SEL6210S-TP5 RED	LED	TRANSPOSE		01
LD024	**VU067800**	LED	SEL6210S-TP5 RED	LED	REC		01
LD044	**VD180000**	LED	SLZ-190B-03-T2 AKA	LEDテー．フォ	USER		01
LD074	**VD180000**	LED	SLZ-190B-03-T2 AKA	LEDテー．フォ	TEMPO		01
LD081	**VU067800**	LED	SEL6210S-TP5 RED	LED	PLAY/PAUSE		01
LD082	**VD180000**	LED	SLZ-190B-03-T2 AKA	LEDテー．フォ	PRESET		01

＊ : New Parts

RANK : Japan only

PNL and PNR

REF NO.	PART NO.	DESCRIPTION		部品名	REMARKS	QTY	RANK
LD084	**VD180000**	LED	SLZ-190B-03-T2 AKA	**ＬＥＤテー．フォ**	FUNCTION		01
LD101	**VQ323900**	LED Display	SL-9351S	**ＬＥＤディスプレイ**	TEMPO/OTHER VALUE		05
R0010	**HF754470**	Carbon Resistor	47.0 1/4 J AX TP	**カーボン抵抗**			01
R0011	**HF755100**	Carbon Resistor	100.0 1/4 J AX TP	**カーボン抵抗**			01
-0018	**HF755100**	Carbon Resistor	100.0 1/4 J AX TP	**カーボン抵抗**			01
R0031	**HF754470**	Carbon Resistor	47.0 1/4 J AX TP	**カーボン抵抗**			01
R0032	**HF754470**	Carbon Resistor	47.0 1/4 J AX TP	**カーボン抵抗**			01
R0033	**--**	Jumper Wire	0.55 TIN	**ジャンパー線**	(VA07890)		
-0036	**--**	Jumper Wire	0.55 TIN	**ジャンパー線**	(VA07890)		
R0037	**HF754470**	Carbon Resistor	47.0 1/4 J AX TP	**カーボン抵抗**			01
-0039	**HF754470**	Carbon Resistor	47.0 1/4 J AX TP	**カーボン抵抗**			01
SW001	**V8889300**	Push Switch	EVQ 11Y 07K	**プッシュＳＷ**	DEMO		01
SW001	**VV439800**	Tact Switch	SKQNAJ	**タクトＳＷ**			01
SW002	**V8889300**	Push Switch	EVQ 11Y 07K	**プッシュＳＷ**	TRANSPOSE		01
SW002	**VV439800**	Tact Switch	SKQNAJ	**タクトＳＷ**			01
SW003	**V8889300**	Push Switch	EVQ 11Y 07K	**プッシュＳＷ**	REC		01
SW003	**VV439800**	Tact Switch	SKQNAJ	**タクトＳＷ**			01
SW004	**V8889300**	Push Switch	EVQ 11Y 07K	**プッシュＳＷ**	STOP		01
SW004	**VV439800**	Tact Switch	SKQNAJ	**タクトＳＷ**			01
SW011	**V8889300**	Push Switch	EVQ 11Y 07K	**プッシュＳＷ**	PLAY/PAUSE		01
SW011	**VV439800**	Tact Switch	SKQNAJ	**タクトＳＷ**			01
SW012	**V8889300**	Push Switch	EVQ 11Y 07K	**プッシュＳＷ**	SONG SELECT		01
SW012	**VV439800**	Tact Switch	SKQNAJ	**タクトＳＷ**			01
SW014	**V8889300**	Push Switch	EVQ 11Y 07K	**プッシュＳＷ**	TEMPO/FUNCTION#		01
SW014	**VV439800**	Tact Switch	SKQNAJ	**タクトＳＷ**			01
SW021	**V8889300**	Push Switch	EVQ 11Y 07K	**プッシュＳＷ**	-/NO		01
SW021	**VV439800**	Tact Switch	SKQNAJ	**タクトＳＷ**			01
SW022	**V8889300**	Push Switch	EVQ 11Y 07K	**プッシュＳＷ**	+/YES		01
SW022	**VV439800**	Tact Switch	SKQNAJ	**タクトＳＷ**			01
SW023	**V8889300**	Push Switch	EVQ 11Y 07K	**プッシュＳＷ**	LEFT		01
SW023	**VV439800**	Tact Switch	SKQNAJ	**タクトＳＷ**			01
SW024	**V8889300**	Push Switch	EVQ 11Y 07K	**プッシュＳＷ**	RIGHT		01
SW024	**VV439800**	Tact Switch	SKQNAJ	**タクトＳＷ**			01
SW031	**V8889300**	Push Switch	EVQ 11Y 07K	**プッシュＳＷ**	METRONOME ON/OFF		01
SW031	**VV439800**	Tact Switch	SKQNAJ	**タクトＳＷ**			01
SW032	**V8889300**	Push Switch	EVQ 11Y 07K	**プッシュＳＷ**	UP		01
SW032	**VV439800**	Tact Switch	SKQNAJ	**タクトＳＷ**			01
SW033	**V8889300**	Push Switch	EVQ 11Y 07K	**プッシュＳＷ**	DOWN		01
SW033	**VV439800**	Tact Switch	SKQNAJ	**タクトＳＷ**			01
	WE090000	Circuit Board	PNR	**ＰＮＲシート**	(WE08990)(X5956C0)		10
	WE090100	Circuit Board	MV	**ＭＶシート**	(WE08990)(X5956C0)		04
	--	Jumper Wire	0.55 TIN	**ジャンパー線**	(VA07890)	16	
CN102	**VB858700**	Base Post Connector	PH 8P SE	**ベースポスト**			01
CN202	**VB858800**	Base Post Connector	PH 9P SE	**ベースポスト**			01
CN302	**VB858600**	Base Post Connector	PH 7P SE	**ベースポスト**			01
CN401	**VB858700**	Base Post Connector	PH 8P SE	**ベースポスト**			01
D0005	**VD631600**	Diode	1SS133,176,HSS104	**ダイオード**			01
-0008	**VD631600**	Diode	1SS133,176,HSS104	**ダイオード**			01
D0015	**VD631600**	Diode	1SS133,176,HSS104	**ダイオード**			01
-0018	**VD631600**	Diode	1SS133,176,HSS104	**ダイオード**			01
D0025	**VD631600**	Diode	1SS133,176,HSS104	**ダイオード**			01
-0027	**VD631600**	Diode	1SS133,176,HSS104	**ダイオード**			01
D0035	**VD631600**	Diode	1SS133,176,HSS104	**ダイオード**			01
-0037	**VD631600**	Diode	1SS133,176,HSS104	**ダイオード**			01
D0045	**VD631600**	Diode	1SS133,176,HSS104	**ダイオード**			01
-0048	**VD631600**	Diode	1SS133,176,HSS104	**ダイオード**			01
LD015	**VU067800**	LED	SEL6210S-TP5 RED	**LED**	GRAND PIANO1		01
LD016	**VU067800**	LED	SEL6210S-TP5 RED	**LED**	GRAND PIANO2		01
LD017	**VU067800**	LED	SEL6210S-TP5 RED	**LED**	E.PIANO1		01
LD018	**VU067800**	LED	SEL6210S-TP5 RED	**LED**	E.PIANO2		01
LD025	**VU067800**	LED	SEL6210S-TP5 RED	**LED**	CHURCH ORGAN		01
LD026	**VU067800**	LED	SEL6210S-TP5 RED	**LED**	JAZZ ORGAN		01
LD027	**VU067800**	LED	SEL6210S-TP5 RED	**LED**	STRINGS		01
LD028	**VU067800**	LED	SEL6210S-TP5 RED	**LED**	CHOIR		01
LD035	**VU067800**	LED	SEL6210S-TP5 RED	**LED**	HARPSICHORD		01
LD036	**VU067800**	LED	SEL6210S-TP5 RED	**LED**	E.CLAVICHORD		01
LD037	**VU067800**	LED	SEL6210S-TP5 RED	**LED**	VIBRAPHONE		01
LD045	**VU067800**	LED	SEL6210S-TP5 RED	**LED**	GUITAR		01
LD046	**VU067800**	LED	SEL6210S-TP5 RED	**LED**	WOOD BASS		01

＊ : New Parts

RANK : Japan only

PNR

REF NO.	PART NO.	DESCRIPTION		部品名	REMARKS	QTY	RANK
LD047	**VU067800**	LED	SEL6210S-TP5 RED	LED	E.BASS		01
LD056	**VD180000**	LED	SLZ-190B-03-T2 AKA	LEDテー．フォ	ROOM		01
LD057	**VD180000**	LED	SLZ-190B-03-T2 AKA	LEDテー．フォ	CHORUS		01
LD065	**VD180000**	LED	SLZ-190B-03-T2 AKA	LEDテー．フォ	BRIGHT		01
LD066	**VD180000**	LED	SLZ-190B-03-T2 AKA	LEDテー．フォ	HALL1		01
LD067	**VD180000**	LED	SLZ-190B-03-T2 AKA	LEDテー．フォ	PHASER		01
LD068	**VD180000**	LED	SLZ-190B-03-T2 AKA	LEDテー．フォ	HARD		01
LD075	**VD180000**	LED	SLZ-190B-03-T2 AKA	LEDテー．フォ	NORMAL		01
LD076	**VD180000**	LED	SLZ-190B-03-T2 AKA	LEDテー．フォ	HALL2		01
LD077	**VD180000**	LED	SLZ-190B-03-T2 AKA	LEDテー．フォ	TREMOLO		01
LD078	**VD180000**	LED	SLZ-190B-03-T2 AKA	LEDテー．フォ	MEDIUM		01
LD085	**VD180000**	LED	SLZ-190B-03-T2 AKA	LEDテー．フォ	MELLOW		01
LD086	**VD180000**	LED	SLZ-190B-03-T2 AKA	LEDテー．フォ	STAGE		01
LD087	**VD180000**	LED	SLZ-190B-03-T2 AKA	LEDテー．フォ	ROTARY SP		01
LD088	**VD180000**	LED	SLZ-190B-03-T2 AKA	LEDテー．フォ	SOFT		01
R0021	**HF755100**	Carbon Resistor	100.0 1/4 J AX TP	カーボン抵抗			01
-0028	**HF755100**	Carbon Resistor	100.0 1/4 J AX TP	カーボン抵抗			01
SW005	**V8889300**	Push Switch	EVQ 11Y 07K	プッシュSW	GRAND PIANO1		01
SW005	**VV439800**	Tact Switch	SKQNAJ	タクトSW			01
SW006	**V8889300**	Push Switch	EVQ 11Y 07K	プッシュSW	GRAND PIANO2		01
SW006	**VV439800**	Tact Switch	SKQNAJ	タクトSW			01
SW007	**V8889300**	Push Switch	EVQ 11Y 07K	プッシュSW	E.PIANO1		01
SW007	**VV439800**	Tact Switch	SKQNAJ	タクトSW			01
SW008	**V8889300**	Push Switch	EVQ 11Y 07K	プッシュSW	E.PIANO2		01
SW008	**VV439800**	Tact Switch	SKQNAJ	タクトSW			01
SW015	**V8889300**	Push Switch	EVQ 11Y 07K	プッシュSW	CHURCH ORGAN		01
SW015	**VV439800**	Tact Switch	SKQNAJ	タクトSW			01
SW016	**V8889300**	Push Switch	EVQ 11Y 07K	プッシュSW	JAZZ ORGAN		01
SW016	**VV439800**	Tact Switch	SKQNAJ	タクトSW			01
SW017	**V8889300**	Push Switch	EVQ 11Y 07K	プッシュSW	STRINGS		01
SW017	**VV439800**	Tact Switch	SKQNAJ	タクトSW			01
SW018	**V8889300**	Push Switch	EVQ 11Y 07K	プッシュSW	CHOIR		01
SW018	**VV439800**	Tact Switch	SKQNAJ	タクトSW			01
SW025	**V8889300**	Push Switch	EVQ 11Y 07K	プッシュSW	HARPSICHORD		01
SW025	**VV439800**	Tact Switch	SKQNAJ	タクトSW			01
SW026	**V8889300**	Push Switch	EVQ 11Y 07K	プッシュSW	E.CLAVICHORD		01
SW026	**VV439800**	Tact Switch	SKQNAJ	タクトSW			01
SW027	**V8889300**	Push Switch	EVQ 11Y 07K	プッシュSW	VIBRAPHONE		01
SW027	**VV439800**	Tact Switch	SKQNAJ	タクトSW			01
SW035	**V8889300**	Push Switch	EVQ 11Y 07K	プッシュSW	GUITAR		01
SW035	**VV439800**	Tact Switch	SKQNAJ	タクトSW			01
SW036	**V8889300**	Push Switch	EVQ 11Y 07K	プッシュSW	WOOD BASS		01
SW036	**VV439800**	Tact Switch	SKQNAJ	タクトSW			01
SW037	**V8889300**	Push Switch	EVQ 11Y 07K	プッシュSW	E.BASS		01
SW037	**VV439800**	Tact Switch	SKQNAJ	タクトSW			01
SW045	**V8889300**	Push Switch	EVQ 11Y 07K	プッシュSW	BRILLIANCE		01
SW045	**VV439800**	Tact Switch	SKQNAJ	タクトSW			01
SW046	**V8889300**	Push Switch	EVQ 11Y 07K	プッシュSW	REVERB		01
SW046	**VV439800**	Tact Switch	SKQNAJ	タクトSW			01
SW047	**V8889300**	Push Switch	EVQ 11Y 07K	プッシュSW	EFFECT		01
SW047	**VV439800**	Tact Switch	SKQNAJ	タクトSW			01
SW048	**V8889300**	Push Switch	EVQ 11Y 07K	プッシュSW	TOUCH		01
SW048	**VV439800**	Tact Switch	SKQNAJ	タクトSW			01
TP1	**--**	GND Wire		アース線	(WF11760)		
VR401	**VK369000**	Slide Variable Resistor	A10K RS30112A9	二連スライドVR	MASTER VOLUME		03
⚠	**V2917000**	AC Cord Set	U 2P 2.44m 7A	電源コードセット	U		06
⚠	**VT015800**	AC Cord Set	UC 2P 2.44m 7A	電源コードセット			06
⚠	**V2917100**	AC Cord Set	E 2P 2.5m 2.5A	電源コードセット	E,N		05
⚠	**VT015900**	AC Cord Set	E 2P 2.5m	電源コードセット			05
⚠	**V3126500**	AC Cord Set	B 2P 2.5m	電源コードセット	B		
⚠	**WE670300**	AC Cord Set	B 2P 2.5m	電源コードセット			08
⚠	**V8911300**	AC Cord Set	K 2P 2.5m	電源コードセット	K		05
⚠	**VK726100**	AC Adapter	CCT5902-0701F	ACアダプタ	N		03
⚠	**X6160A00**	Power Transformer	UL A	電源トランス	U		13
⚠	**X6161A00**	Power Transformer	IEC E	電源トランス	E,B,K		13
⚠	**X5303A00**	Power Transformer	IEC_EN E	電源トランス	N		
⚠	**X6162A00**	Power Transformer	IEC/EN60691 E	電源トランス	N		13

＊: New Parts

RANK : Japan only

REF NO.	PART NO.	DESCRIPTION		部品名	REMARKS	QTY	RANK
	X6296A00	Speaker(Woofer)	16cm 6ohm 40W	スピーカ		2	09
	XL455A00	Speaker(Tweeter)	5.0cm 16ohm 60W	スピーカ		2	07
⚠	**VC843500**	Push Switch	SDDLB13102 J.U.C.S	プッシュSW	POWER		03
	VU456000	Rubber Contact	PEDAL	接点ゴムドーム	Pedal	2	03
	V8286600	Rubber Contact	GH3 3M OCT D-C#	シーソードームD－C＃	D0-C#1,D1-C#2,D2-C#3 D3-C#4,D4-C#5,D5-C#6	6	05
	V8286800	Rubber Contact	GH3 3M OCT A-C#	シーソードームA－C＃	A-1-C#0		06
	V8286700	Rubber Contact	GH3 3M OCT D-C	シーソードームD－C	D6-C7		06

＊: New Parts

RANK : Japan only

■ CLP-265GP OVERALL CIRCUIT DIAGRAM 1/3 (DM)

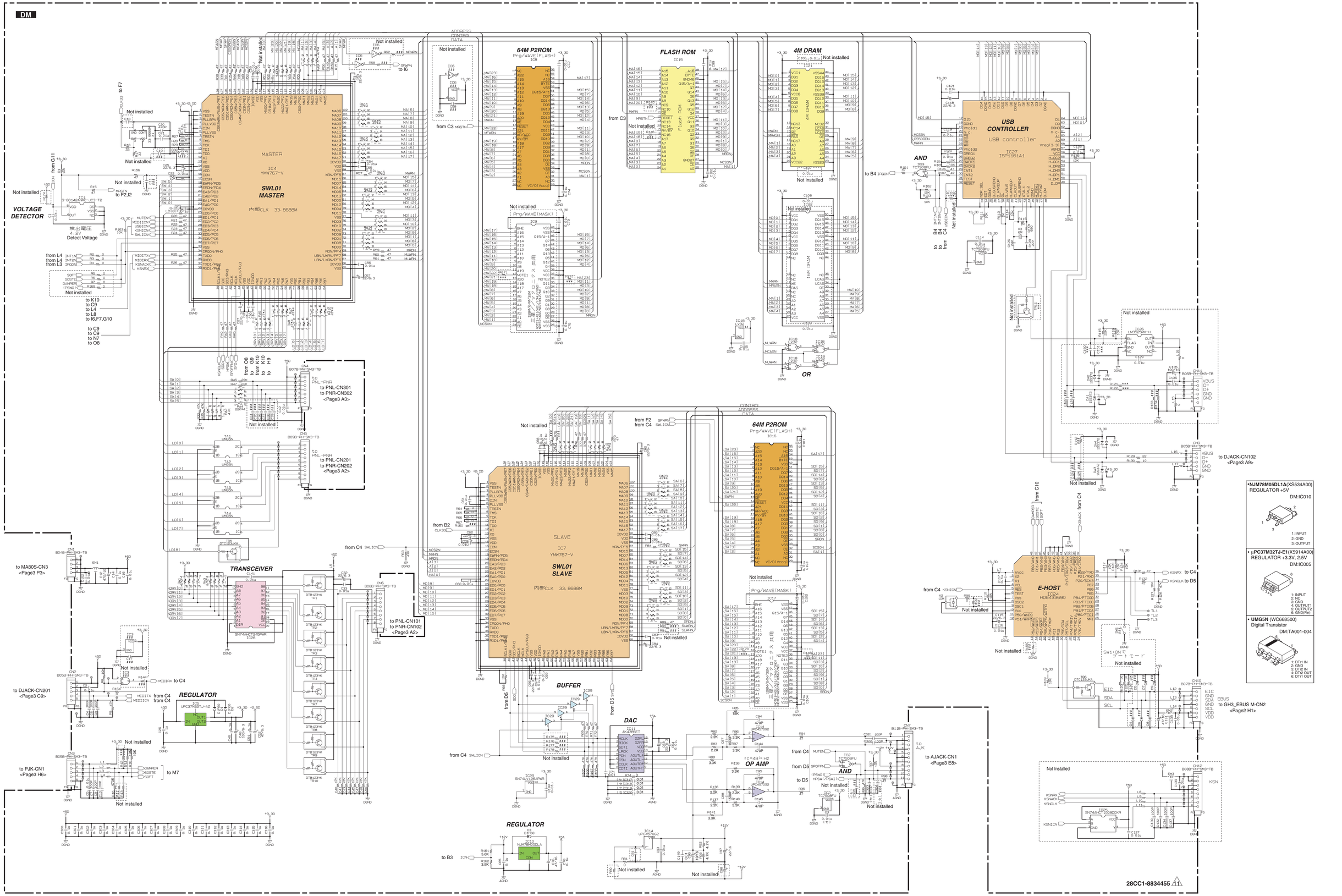

（セ）： Ceramic capacitor
セラミックコンデンサー

Note: See Parts list for details of circuit board component parts.
注）シートの部品詳細はパーツリストを御参照ください。

■ CLP-265GP OVERALL CIRCUIT DIAGRAM 2/3 (GH3_EBUS L, GH3_EBUS M, GH3_EBUS H)

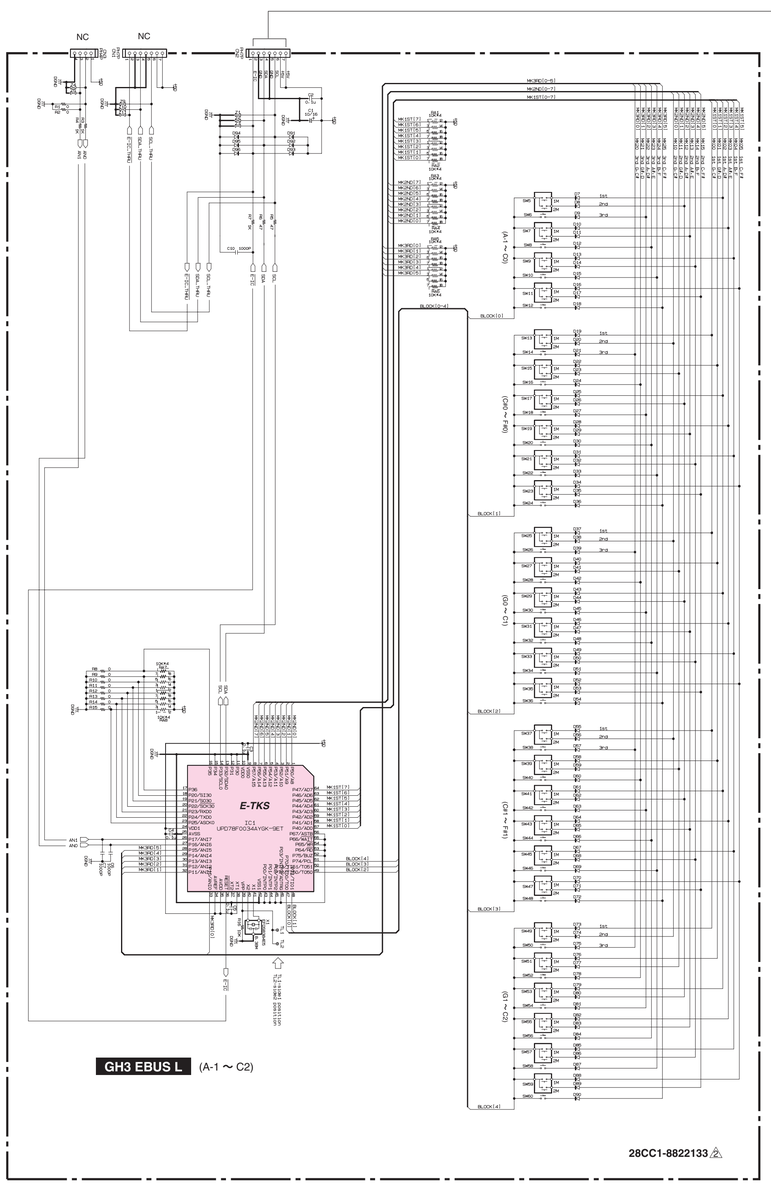

GH3 EBUS L (A-1 ～ C2)

28CC1-8822133 ⚠2

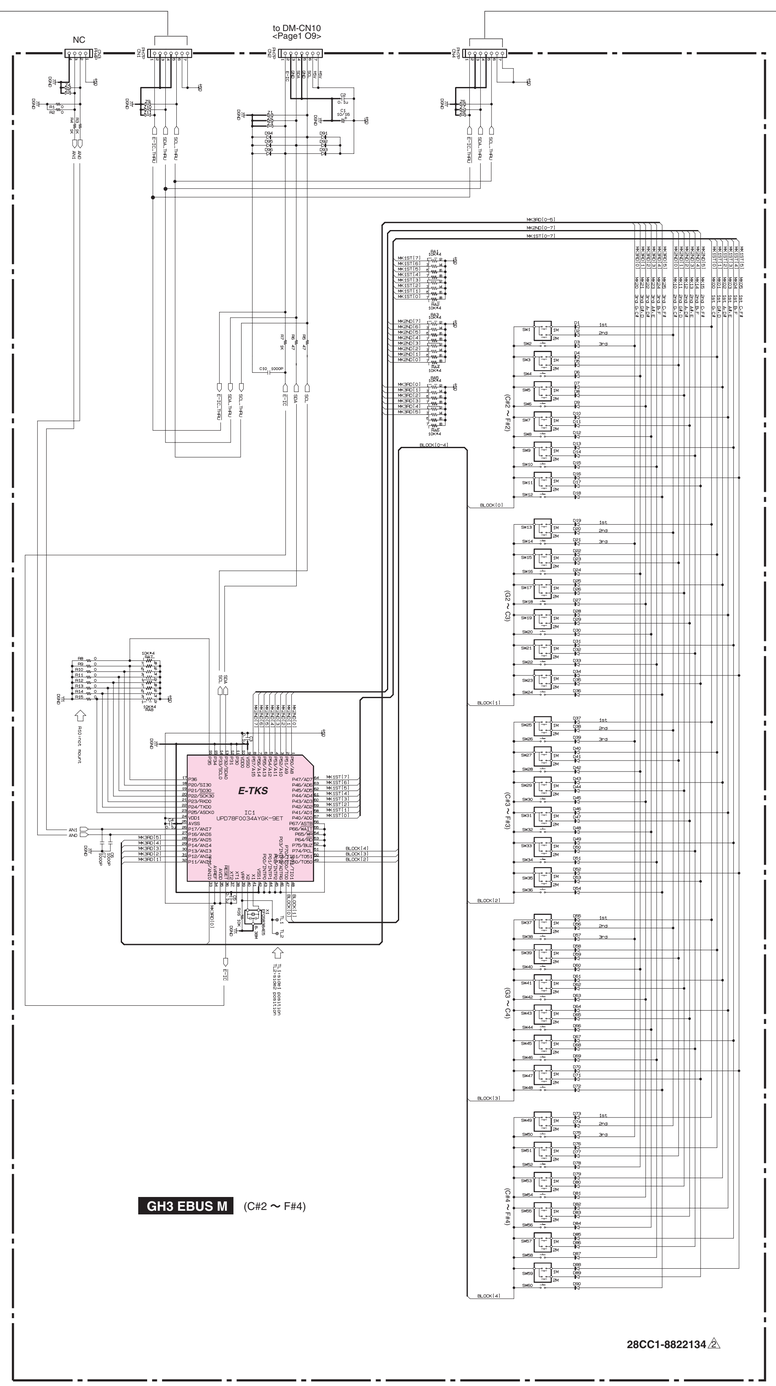

GH3 EBUS M (C#2 ～ F#4)

28CC1-8822134 ⚠2

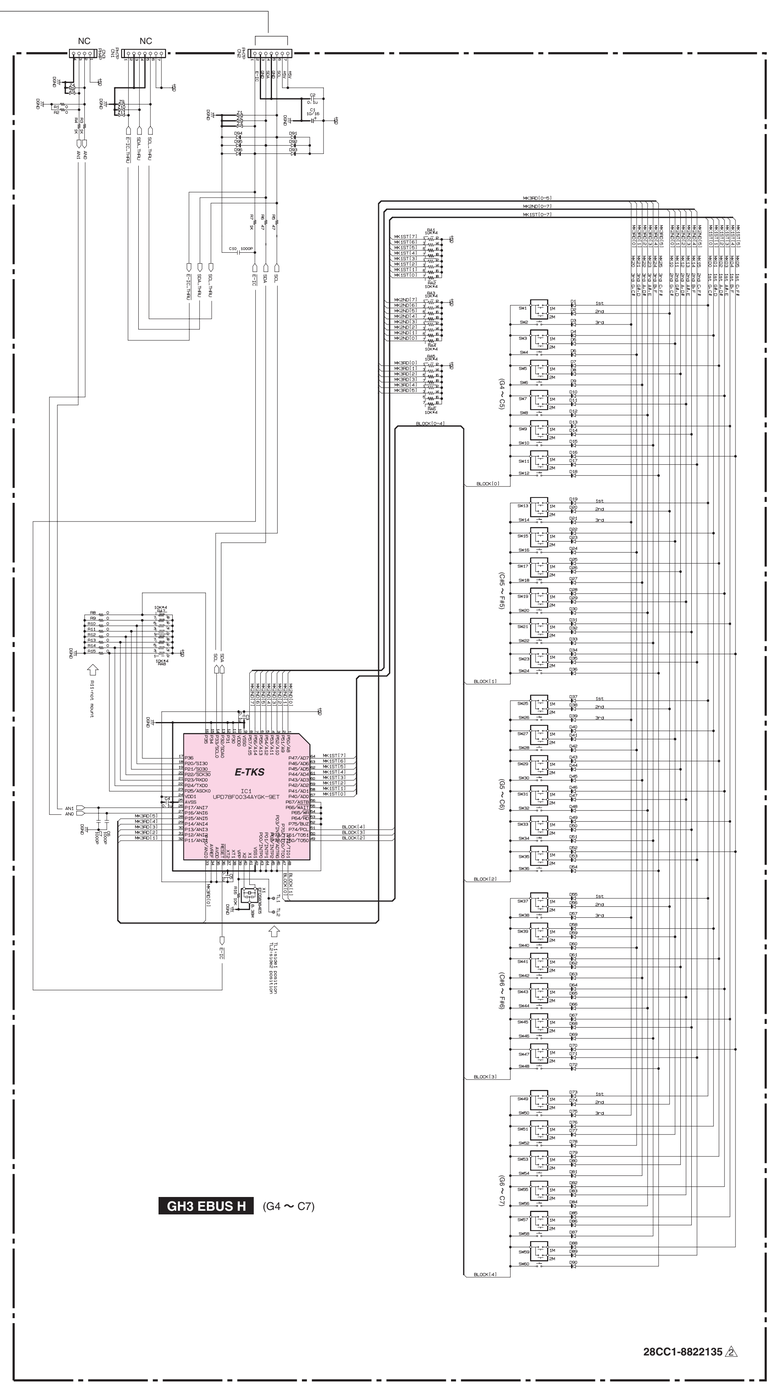

GH3 EBUS H (G4 ～ C7)

28CC1-8822135 ⚠2

Note: See Parts list for details of circuit board component parts.
注）シートの部品詳細はパーツリストを御参照ください。

CLP-265GP

<Page3>

■ CLP-265GP OVERALL CIRCUIT DIAGRAM 3/3 (AJACK, DJACK, EQ, FU60, HP, MA80S, MV, NET1, PJK, PNL, PNR, PEDAL, PEDAL-VR, PL)

SW MATRIX

	SW[0]	SW[1]	SW[2]	SW[3]	SW[4]	SW[5]	
DRV[0]	DEMO	PLAY/ PAUSE	-/NO	METRONOME			PNL
DRV[1]	TRANSPOSE	SONG SELECT	+/YES	TEMPO UP			
DRV[2]	REC		LEFT	TEMPO DOWN			
DRV[3]	STOP	TEMPO/ FUNCTION#	RIGHT				
DRV[4]	GRAND PIANO1	CHURCH ORGAN1	HARPSICHORD1	STRINGS2	BRILLIANCE		PNR
DRV[5]	GRAND PIANO2	CHURCH ORGAN2	HARPSICHORD2	CHOIR	REVERB		
DRV[6]	E.PIANO1	JAZZ ORGAN	VIBRAPHONE	GUITAR	EFFECT		
DRV[7]	E.PIANO2	STRINGS1			TOUCH		

LED MATRIX

	LD[0]	LD[1]	LD[2]	LD[3]	LD[4]	LD[5]	LD[6]	LD[7]	LD[8]	
DRV[0]	7seg_a1	7seg_b1	7seg_c1	7seg_d1	7seg_e1	7seg_f1	7seg_g1	7seg_Dp1	PLAY/PAUSE	PNL
DRV[1]	7seg_a2	7seg_b2	7seg_c2	7seg_d2	7seg_e2	7seg_f2	7seg_g2	7seg_Dp2	PRESET	
DRV[2]	7seg_a3	7seg_b3	7seg_c3	7seg_d3	7seg_e3	7seg_f3	7seg_g3	7seg_Dp3		
DRV[3]	LEFT(Red)	TRANSPOSE	REC		USER		TEMPO	FUNCTION#		
DRV[4]	LEFT(Green)	GRAND PIANO1	CHURCH ORGAN1	HARPSICHORD1	STRINGS2		BRIGHT	NORMAL	MELLOW	PNR
DRV[5]	RIGHT(Red)	GRAND PIANO2	CHURCH ORGAN2	HARPSICHORD2	CHOIR	ROOM	HALL1	HALL2	STAGE	
DRV[6]	RIGHT(Green)	E.PIANO1	JAZZ ORGAN	VIBRAPHONE	GUITAR	CHORUS	PHASER	TREMOLO	ROTARY SP	
DRV[7]		E.PIANO2	STRINGS1				HARD	MEDIUM	SOFT	

PNL

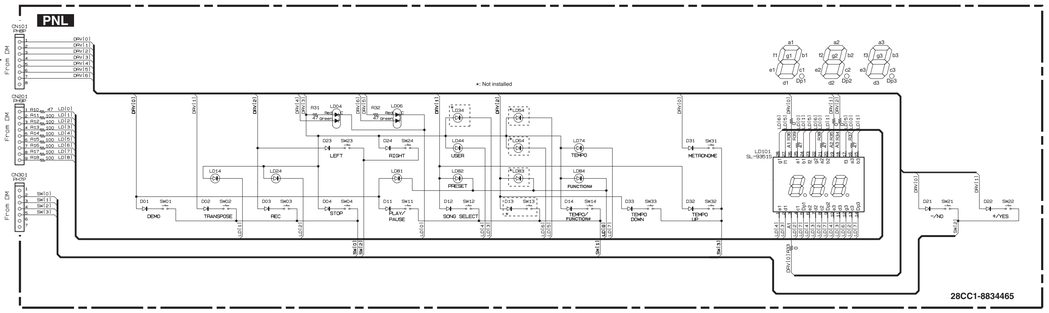

PNR

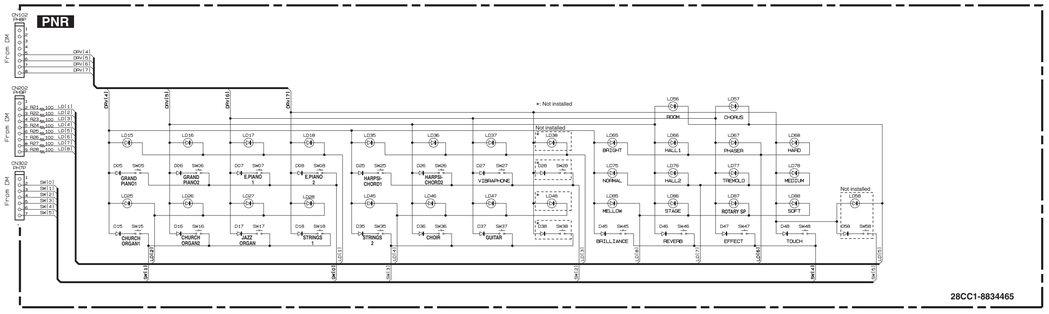

POWER SUPPLY

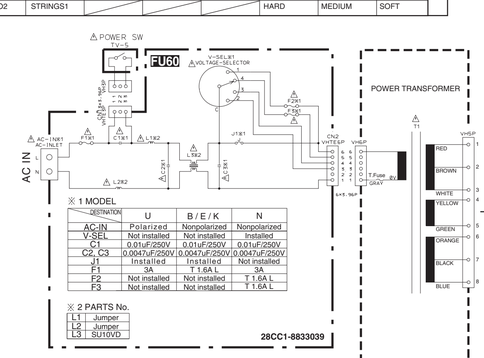

PRIMARY SPECIFICATION

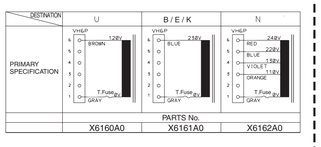

PJK

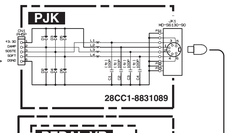

PEDAL-VR

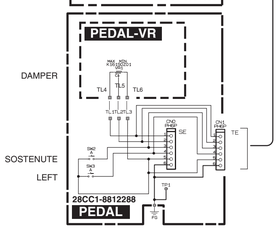

MV

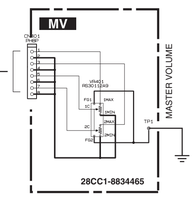

DJACK

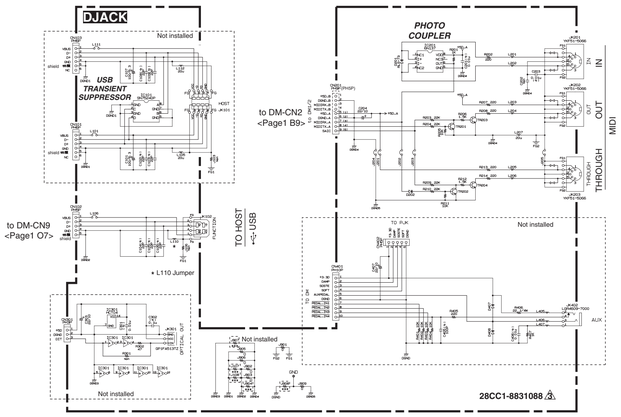

AJACK

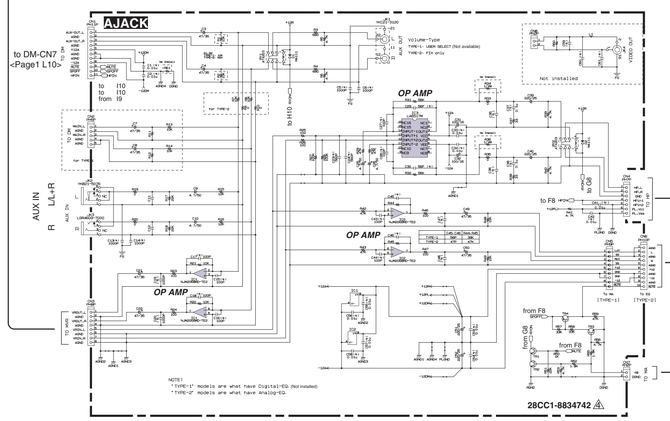

PL



HP

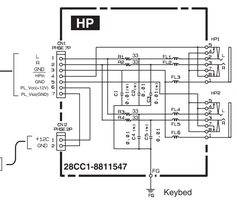

NET1

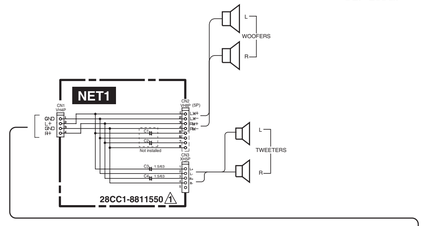

MA80S

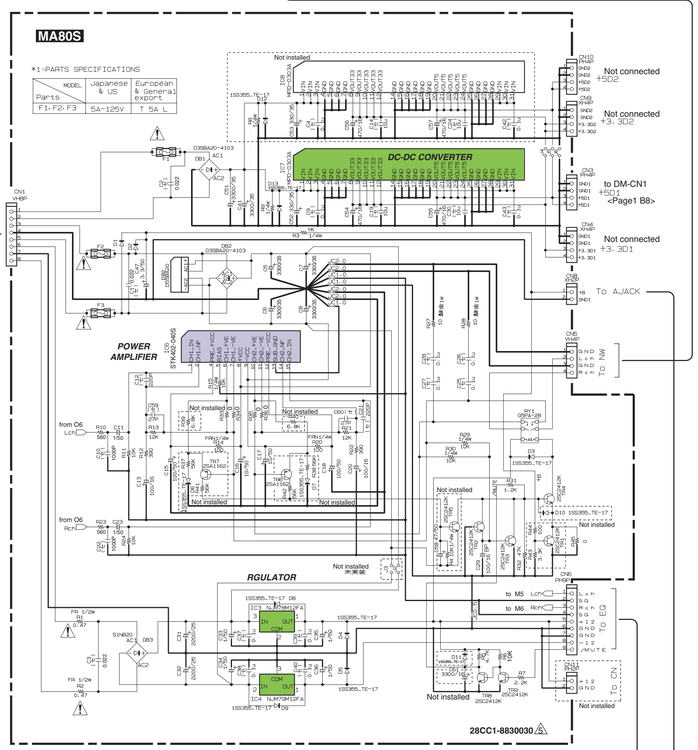

EQ

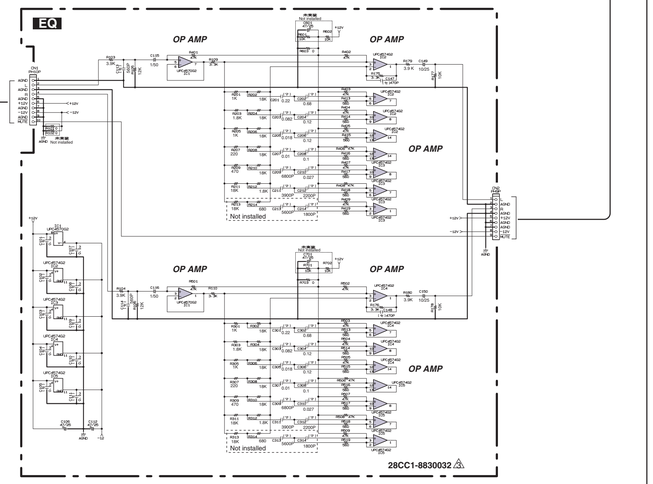

- **NJM78M12FA** (XJ602A00) REGULATOR +12V — MA80S:IC3 — 1: OUTPUT 2: COMMON 3: INPUT
- **NJM79M12FA** (XD343A00) REGULATOR -12V — MA80S:IC4 — 1: OUTPUT 2: INPUT 3: COMMON
- **1SS355 TE-17** (VT332900) DIODE — MA80S:D3-5,8,9 GH3_EBUS L:D007-096 GH3_EBUS M:D001-096 GH3_EBUS H:D007-096 — 1 : ANODE 2 : CATHODE
- **10EDB40-TA2B5** (WB520600) **10EDB40-TA1B2** (WD009700) DIODE — MA80S: D1,2 — 1: ANODE 2: CATHODE
- **D3SBA20-4103** (VQ111500) DIODE STACK 4.0A — MA80S:DB001,002
- **S1NB20 1.0A 200V** (VR253700) DIODE STACK — MA80S:DB003

（セ）： Ceramic Capacitor セラミックコンデンサ
（マ）： Mylar Capacitor マイラーコンデンサ
酸金： Metal Oxide Film Resistor サンキン抵抗
FR： Fuse Resistor ヒューズ抵抗

■ WARNING
Components having special characteristics are marked ⚠ and must be replaced with parts having specification equal to those originally installed.

Note: See Parts list for details of circuit board component parts.
注）シートの部品詳細はパーツリストを御参照ください。

CLP-265GP

■ CLP-265GP BLOCK DIAGRAM

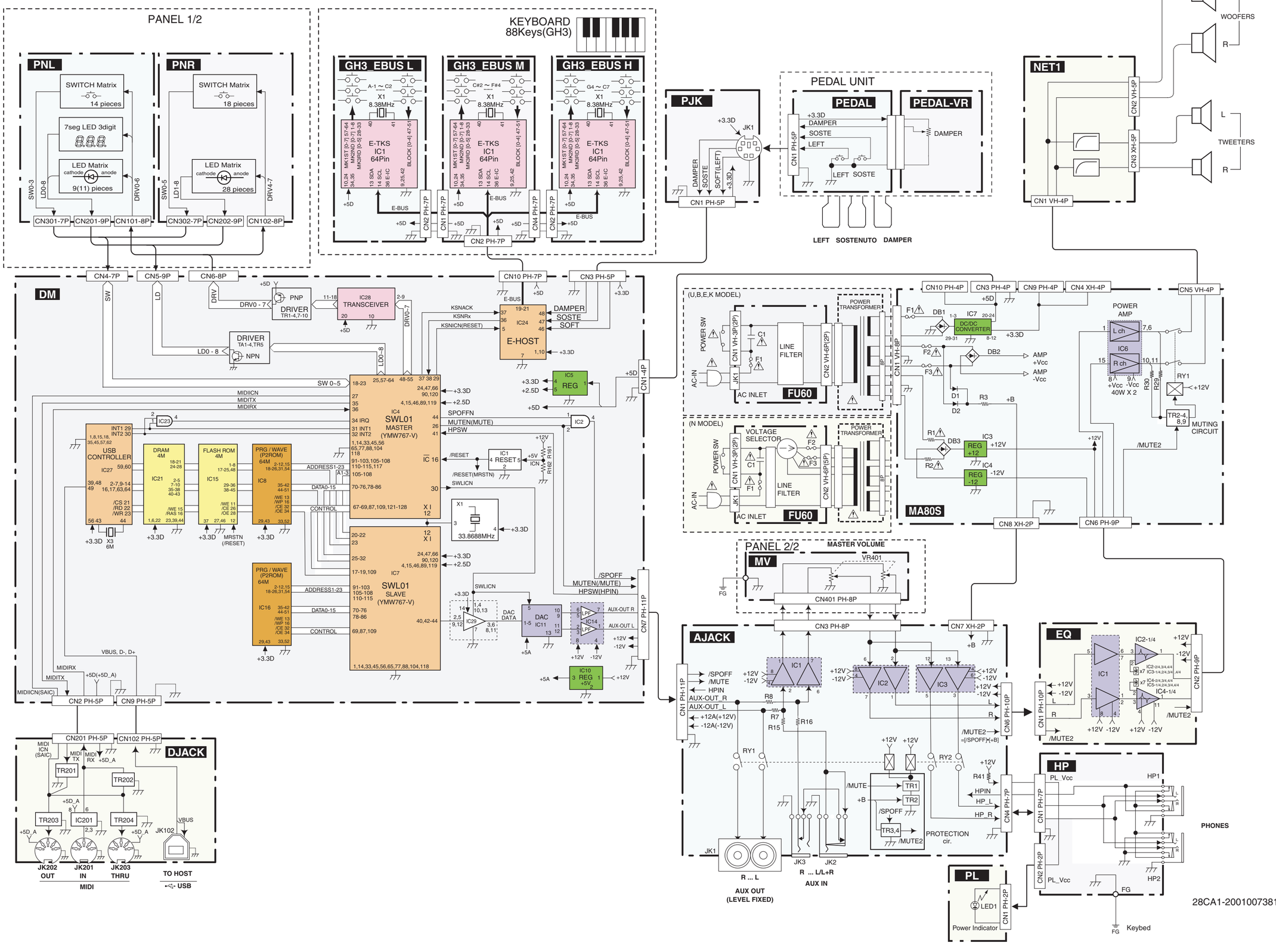

■ CLP-265GP CIRCUIT BOARD LAYOUT & WIRING

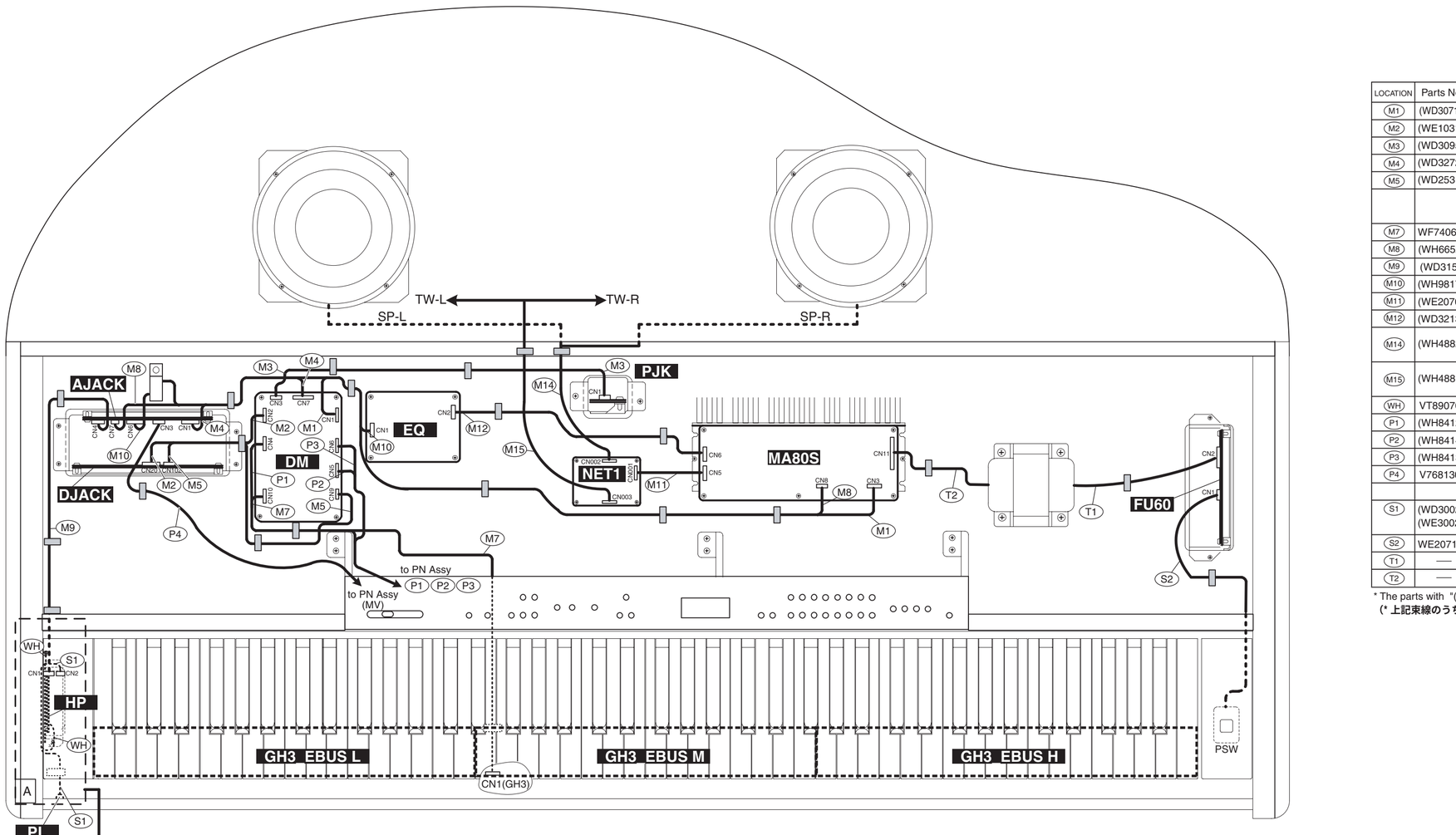

Panel Assembly (Back View)

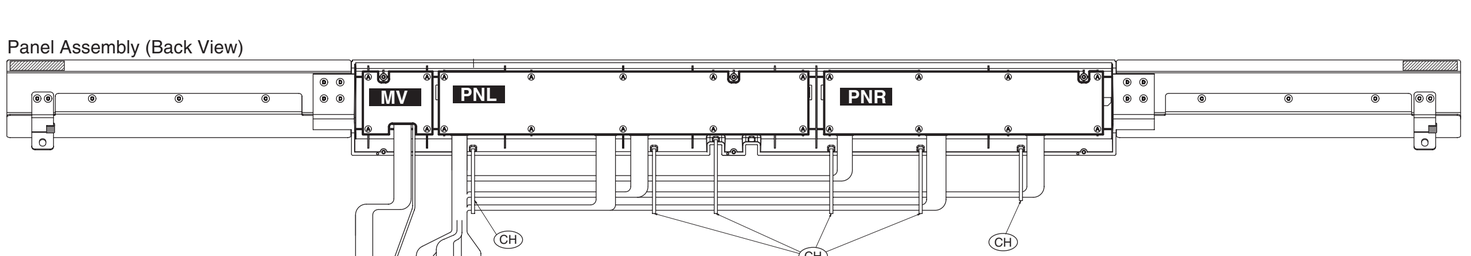

LOCATION	Parts No.	PARTS NAME	DESTINATON		NOTE
M1	(WD30710)	Wire Harness (PH) Ass'y	DM CN1	MA CN3	
M2	(WE10310)	Wire Harness (MIDI) Ass'y	DM CN2	DJACK CN201	
M3	(WD30950)	Wire Harness (PH) Ass'y	DM CN3	PJK CN1	
M4	(WD32720)	Wire Harness (PH) Ass'y	DM CN7	AJACK CN1	
M5	(WD25310)	USB Wire Harness Ass'y	DM CN9	DJACK CN102	
M7	WF740600	Wire Harness (KB) Ass'y	DM CN10	KEYBOARD	
M8	(WH66520)	Wiring (+B) Ass'y	AJACK CN7	MA CN8	
M9	(WD31570)	Wire Harness (PH) Ass'y	AJACK CN4	HP CN1	
M10	(WH98170)	Wire Harness (EQ) Ass'y	AJACK CN6	EQ CN1	
M11	(WE20700)	Wire Harness (NW) Ass'y	MA CN5	NET1 CN001	
M12	(WD32130)	Wire Harness (PH) Ass'y	MA CN6	EQ CN2	
M14	(WH48820)	Wire Harness (SP) Ass'y	NET1 CN002	SPEAKER R SPEAKER L	
M15	(WH48810)	Wire Harness (TW) Ass'y	NET1 CN003	TWEETER R TWEETER L	
WH	VT890700	Wire Harness (Ground) Ass'y	HP	KEYBED	
P1	(WH84120)	Wire Harness (PN7P) Ass'y	DM CN4	PNL CN301 - PNR CN302	Panel Assy
P2	(WH84140)	Wire Harness (PN9P) Ass'y	DM CN5	PNL CN201 - PNR CN202	
P3	(WH84130)	Wire Harness (PN8P) Ass'y	DM CN6	PNL CN101 - PNR CN102	
P4	V7681300	Wire Harness (VOL) Ass'y	AJACK CN3	MV CN401	
S1	(WD30020) (WE30020)	Wire Harness (PH) Ass'y	HP CN2	PL	Front Rail Assy
S2	WE207100	Wire Harness (PSW) Ass'y	FU CN1	POWER SWITCH	Key Block Assy(R)
T1	—	—	FU CN2	POWER TRANSFORMER	
T2	—	—	MA CN1	POWER TRANSFORMER	

* The parts with "( )" in "Parts Number" are not available as service parts.
(* 上記束線のうち、部品番号に"( )"がついている部品は、サービス部品として準備されていません。)

Note 1 :
The symbol sign of union parts. **(結束部品のシンボル記号)**

: Filament Tape **(フィラメントテープ)**
: Cord Binder **(ビニタイ)**
: Ferrite core **(データーラインフィルター)**
(CH) : Cable Holder **(束線止め)**

Note 2 :MA and FU cover is used for U destination only.
(MAとFUカバーはU仕向けのみに使用します)

Note 3 :
Wire harness (S1) is.fixed to Side Arm with FIlament tape.
((S1) を腕木にフィラメントテープで固定します)

Note 4 :
Wire harness (WH) (S1) should be passed on the side of Side Arm Assembly.
((WH) (S1) はHPシートの腕木側を通る事)

Note 5 :
Reference for Assembly Wireing only. **(束線処理のみ参照の事)**

Note 6 :
(M14) (M15) is careful so that a key cove rod may not be hit.
((M14) (M15) は連動棒に当たらない様に注意する事)

Note 7 :
(M12) (T2) is careful so that heatsink on PCB Assay may not be touch.
((M12) (T2) はMAシートの放熱板に当たらない様に注意する事)

CLP-265GP