Clavinova®

CLP-175

SERVICE MANUAL



■ CONTENTS

SPECIFICATIONS **3**
PANEL LAYOUT **4**
DISASSEMBLY PROCEDURE **6**
LSI PIN DESCRIPTION **21**
IC BLOCK DIAGRAM **28**
CIRCUIT BOARDS **29**
KEYBOARD ADJUSTMENT **42**
TEST PROGRAM **47**
MESSAGE LIST **52**
FACTORY SET **58**
MIDI IMPLEMENTATION CHART **59**
MIDI DATA FORMAT **60**
PARTS LIST
BLOCK DIAGRAM
CIRCUIT BOARD LAYOUT & WIRING
OVERALL CIRCUIT DIAGRAM

CL **001708**

YAMAHA
HAMAMATSU, JAPAN

Copyright (c) Yamaha Corporation. All rights reserved. PDF-K7691 '03.06

IMPORTANT NOTICE

This manual has been provided for the use of authorized Yamaha Retailers and their service personnel. It has been assumed that basic service procedures inherent to the industry, and more specifically Yamaha Products, are already known and understood by the users, and have therefore not been restated.

WARNING : Failure to follow appropriate service and safety procedures when servicing this product may result in personal injury, destruction of expensive components and failure of the product to perform as specified. For these reasons, we advise all Yamaha product owners that all service required should be performed by an authorized Yamaha Retailer or the appointed service representative.

IMPORTANT : This presentation or sale of this manual to any individual or firm does not constitute authorization, certification, recognition of any applicable technical capabilities, or establish a principal-agent relationship of any form.

The data provided is believed to be accurate and applicable to the unit (s) indicated on the cover. The research engineering, and service departments of Yamaha are continually striving to improve Yamaha products. Modifications are, therefore, inevitable and changes in specification are subject to change without notice or obligation to retrofit. Should any discrepancy appear to exist, please contact the distributor's Service Division.

WARNING : Static discharges can destroy expensive components. Discharge any static electricity your body may have accumulated by grounding yourself to the ground bus in the unit (heavy gauge black wires connect to this bus).

IMPORTANT : Turn the unit OFF during disassembly and parts replacement. Recheck all work before you apply power to the unit.

WARNING : CHEMICAL CONTENT NOTICE !

The solder used in the production of this product contains LEAD. In addition, other electrical/electronic and/or plastic (where applicable) components may also contain traces of chemicals found by the California Health and Welfare Agency (and possibly other entities) to cause cancer and/or birth defects or other reproductive harm.

DO NOT PLACE SOLDER, ELECTRICAL/ELECTRONIC OR PLASTIC COMPONENTS IN YOUR MOUTH FOR ANY REASON WHAT SO EVER!

Avoid prolonged, unprotected contact between solder and your skin! When soldering, do not inhale solder fumes or expose eyes to solder/flux vapor!

If you come in contact with solder or components located inside the enclosure of this product, wash your hands before handling food.

IMPORTANT NOTICE FOR THE UNITED KINGDOM

Connecting the Plug and Cord

IMPORTANT . The wires in this mains lead are coloured in accordance with the following code:

BLUE: NEUTRAL
BROWN: LIVE

As the colours of the wires in the mains lead of this apparatus may not correspond with the coloured markings identifying the terminals in your plug proceed as follows:

The wire which is coloured BLUE must be connected to the terminal which is marked with the letter N or coloured BLACK.

The wire which is coloured BROWN must be connected to the terminal which is marked with the letter L or coloured RED.

Making sure that neither core is connected to the earth terminal of the three pin plug.

■ WARNING

Components having special characteristics are marked ⚠ and must be replaced with parts having specification equal to those originally installed.

■ SPECIFICATIONS

Keyboard	88 keys (A-1–C7)
Sound Source	AWM Dynamic Stereo Sampling
Polyphony	max. 128 voices
Voice Selection	Panel preset for manual performance: 38 voices, XG voices: 480 voices + 12 drum kits
Effect	Reverb, Chorus, Brilliance, Variation effect, Insertion effect x 3, iAFC
Controls	Dual, Split
Display	LCD
Recording/Playback	16-track recording/playback, tempo adjustment
Disk Drive	3.5-inch floppy diskdrive (2DD and 2HD compatible)
Pedal	Damper, Sostenuto, Soft
Demo Songs	16 voice demo songs, 50 preset songs
Jacks/Connectors	AUX IN(L/L+R,R), AUX OUT(L/L+R,R), AUX OUT (LEVEL FIXED)(L,R), MIDI (IN/OUT/THRU), PHONES X2, TO HOST, USB, AUX PEDAL
Main Amplifiers	60W x 2 + 20W x 2
Speakers	16cm x 2, 10cm x 2, 3cm (DOME) x 2, 5cm x 2
Dimensions (W x D x H) **Top Board (lid) down** **(Top Board (lid) up)**	 1435mm x 1147mm x 933mm [56-1/2" x 45-1/8" x 36-3/4"] (1435mm x 1147mm x 1390mm [56-1/2" x 45-1/8" x 54-7/16"])
Weight	118 kg (260lbs., 2oz)
Output Impedance	PHONES: 33 ohm, AUX OUT: 600 ohm
Consumption Electricity	190W
Accessories	Owner’s Manual, Reference Booklet, “50 Greats for the Piano” Score Collection, Recording Disk

■ PANEL LAYOUT

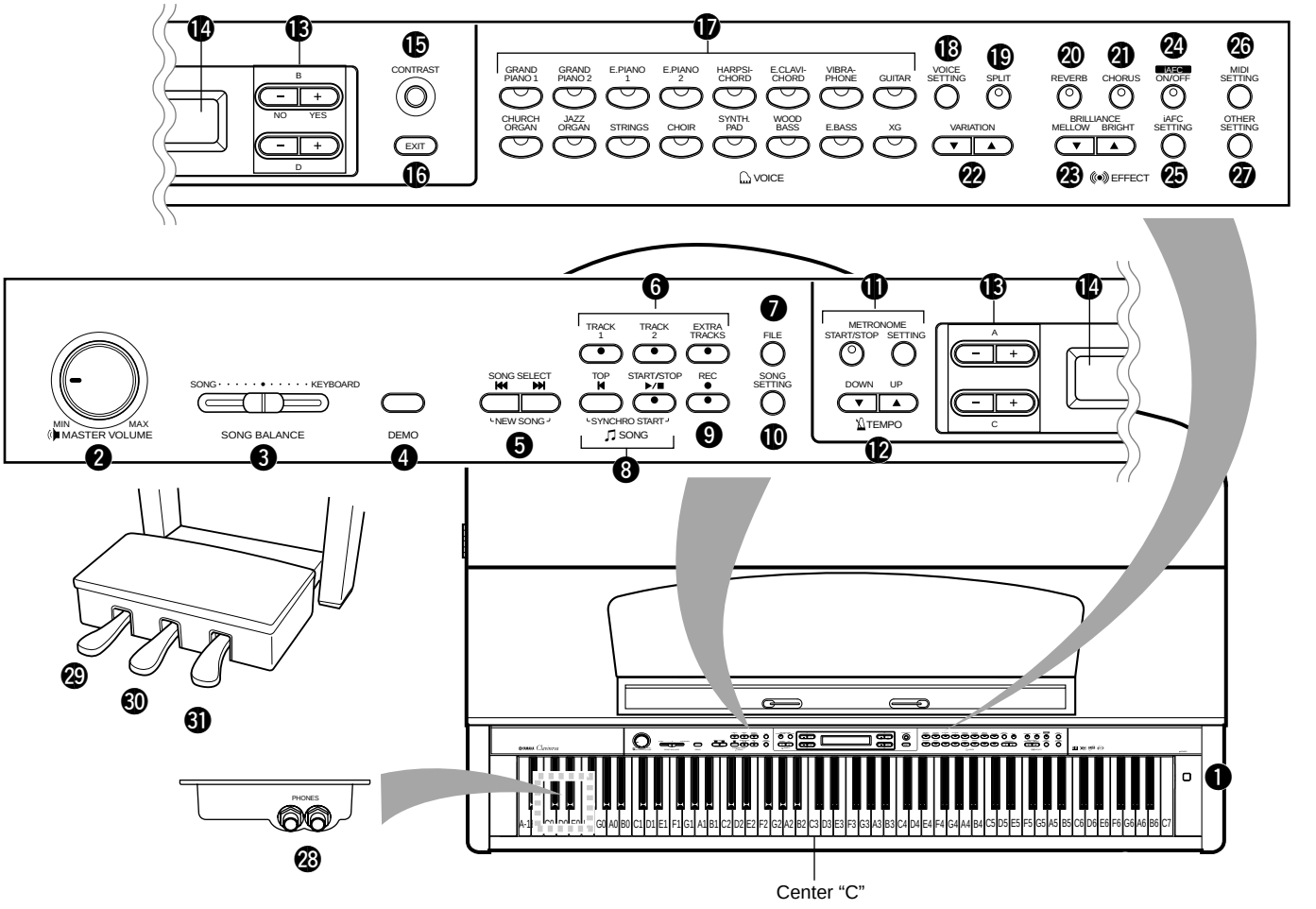

❶ [POWER] switch
❷ [MASTER VOLUME] knob
❸ [SONG BALANCE] knob
❹ [DEMO] button
❺ SONG SELECT [⏮] [⏭] buttons
❻ [TRACK1] [TRACK2] [EXTRA TRACKS] buttons
❼ [FILE] button
❽ SONG [TOP]/[START/STOP] buttons
❾ [REC] button
❿ [SONG SETTING] button
⓫ METRONOME [START/STOP]/[SETTING] buttons
⓬ TEMPO [DOWN] [UP] buttons
⓭ LCD buttons
A [–] [+]/B [– (NO)] [+ (YES)]/C [–] [+]/D [–] [+]
⓮ LCD screen
⓯ [CONTRAST] knob
⓰ [EXIT] button
⓱ Voice group buttons
⓲ [VOICE SETTING] button
⓳ [SPLIT] button
⓴ [REVERB] button
㉑ [CHORUS] button
㉒ VARIATION [▼] [▲] buttons
㉓ BRILLIANCE [MELLOW] [BRIGHT] buttons
㉔ iAFC [ON/OFF] button
㉕ [iAFC SETTING] button
㉖ [MIDI SETTING] button
㉗ [OTHER SETTING] button
㉘ [PHONES] jacks
㉙ Soft pedal
㉚ Sostenuto pedal
㉛ Damper pedal

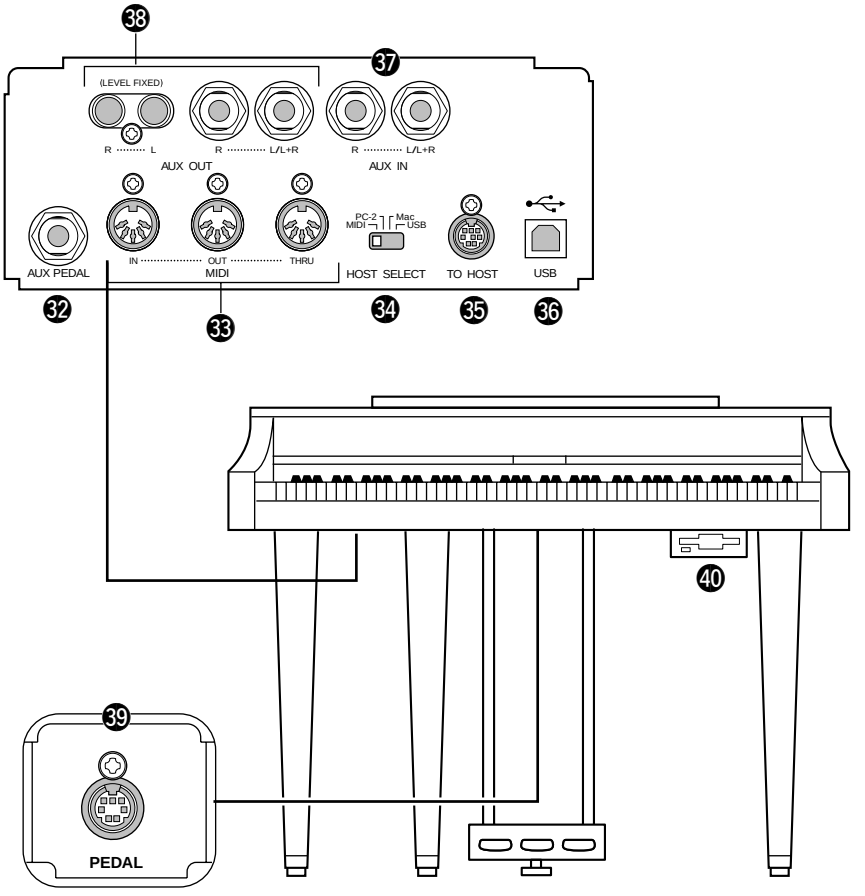

32 [AUX PEDAL] jack
33 MIDI [IN] [OUT] [THRU] connectors
34 [HOST SELECT] switch
35 [TO HOST] connector
36 [USB] connector
37 AUX IN [L/L+R] [R] jacks
38 AUX OUT [L/L+R] [R]/ (LEVEL FIXED) [L] [R] jacks
39 [PEDAL] connector
40 Flopy disk drive

■ DISASSEMBLY PROCEDURE

1. Music Rest Assembly

(Time required : About 1 minute)

Remove the four (4) screws marked [66]. The music rest assembly can then be removed. (Fig. 1)

2. Top Board (L) Assembly (Lid)

(Time required : About 3 minutes)

Remove the two (2) hinge shafts. The top board (L) assembly (lid) can then be removed. (Fig. 1)

• Removal of the hinge shaft



Remove the two (2) hinge shafts one by one.



3. Top Board (Lid) Stay L & S

(Time required : About 4 minutes)

3-1. Remove the top board (L) assembly (lid). (See procedure 2)

3-2. Remove the screw marked [79]. The top board (lid) stay L and S can then be removed. (Fig. 1)

4. Speaker Grille Assembly, Inner Board Assembly (Time required : About 5 minutes)

4-1. Remove the top board (L) assembly (lid). (See procedure 2)

4-2. Remove the speaker grille assembly. (Fig. 1)

*** The speaker grille assembly is fixed by means of the dual lock fastener.**

4-3. Remove the ten (10) screws marked [70]. The inner board assembly can then be removed. (Fig. 1)

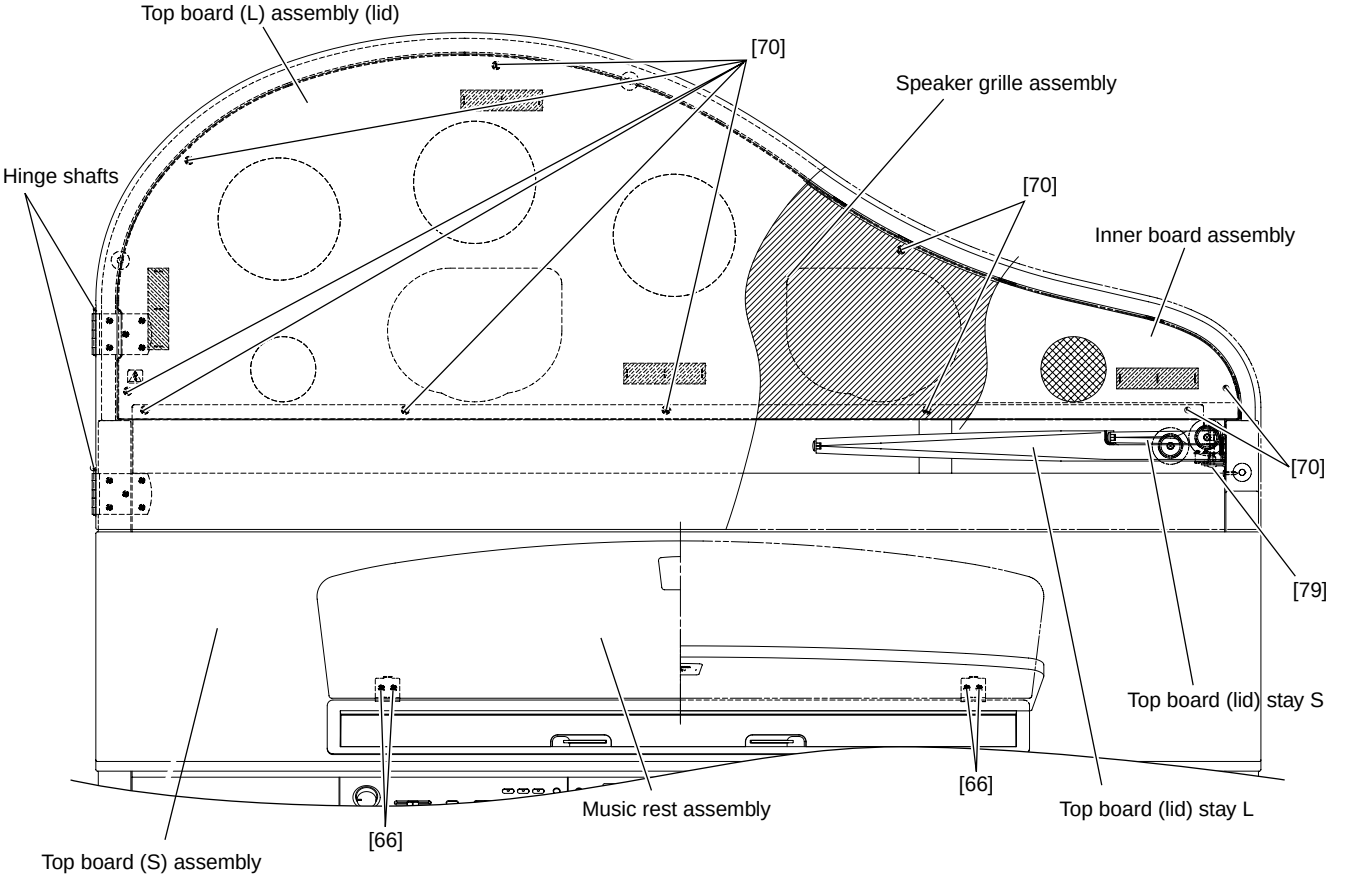

[66]: Bind Head Tapping Screw-1 3.0x16 MFZN2BL (EP030310)
[70]: Truss Head Screw 4.0x16 MFZN2BL (V6207400)
[79]: Bind Head Screw 5.0x50 MFZN2Y (WB272400)

Fig. 1

5. Circuit Boards & Assemblies (Main Unit-Part 1) (Time required : About 7 minutes each)

5-1. Remove the top board (L) assembly (lid). (See procedure 2)

5-2. Remove the speaker grille assembly and the inner board assembly. (See procedure 4)

5-3. Each circuit board and assembly can be removed by removing its fixing screws as listed below.

Circuit board and Assembly	Ref. No.	Screw	QTY	Fig.
MA120B assembly	61A	Bind Head Tapping Screw-1 3.5x16 MFZN2Y (EP030190)	2	2
FU120LB assembly	61B	Bind Head Tapping Screw-1 3.5x16 MFZN2Y (EP030190)	2	2
Jack assembly	61C	Bind Head Tapping Screw-1 3.5x16 MFZN2Y (EP030190)	4	2
MAF assembly	61D	Bind Head Tapping Screw-1 3.5x16 MFZN2Y (EP030190)	2	2
NET1	60A	Bind Head Tapping Screw-1 3.5x20 MFZN2Y (EP030470)	4	2
NETWORK	60B	Bind Head Tapping Screw-1 3.5x20 MFZN2Y (EP030470)	4	2
MIC	60C	Bind Head Tapping Screw-1 3.5x20 MFZN2Y (EP030470)	3	2
Power transformer	67	Bind Head Screw 4.0x30 MFZN2BL (VVT229100)	4	2
Woofer (*1)	6A	Bind Head Tapping Screw-1 4.0x16 MFZN2BL (EP040250)	4	2
Tweeter (*2)	6B	Bind Head Tapping Screw-1 4.0x16 MFZN2BL (EP040250)	4	2
AFC capacitor mic. (*3)	106	Bind Head Tapping Screw-1 3.5x12 MFZN2BL (EP030340)	2	2
	Ae	Plastic rivet P3065B (V9240700)	2	2

*1 The left and right woofer each can then be removed in the same manner.

*2 The left and right tweeter each can then be removed in the same manner.

*3 The left and right AFC capacitor mic each can then be removed in the same manner.
For removal of the AFC capacitor mic in the top board (S) assembly, refer to procedure 13.

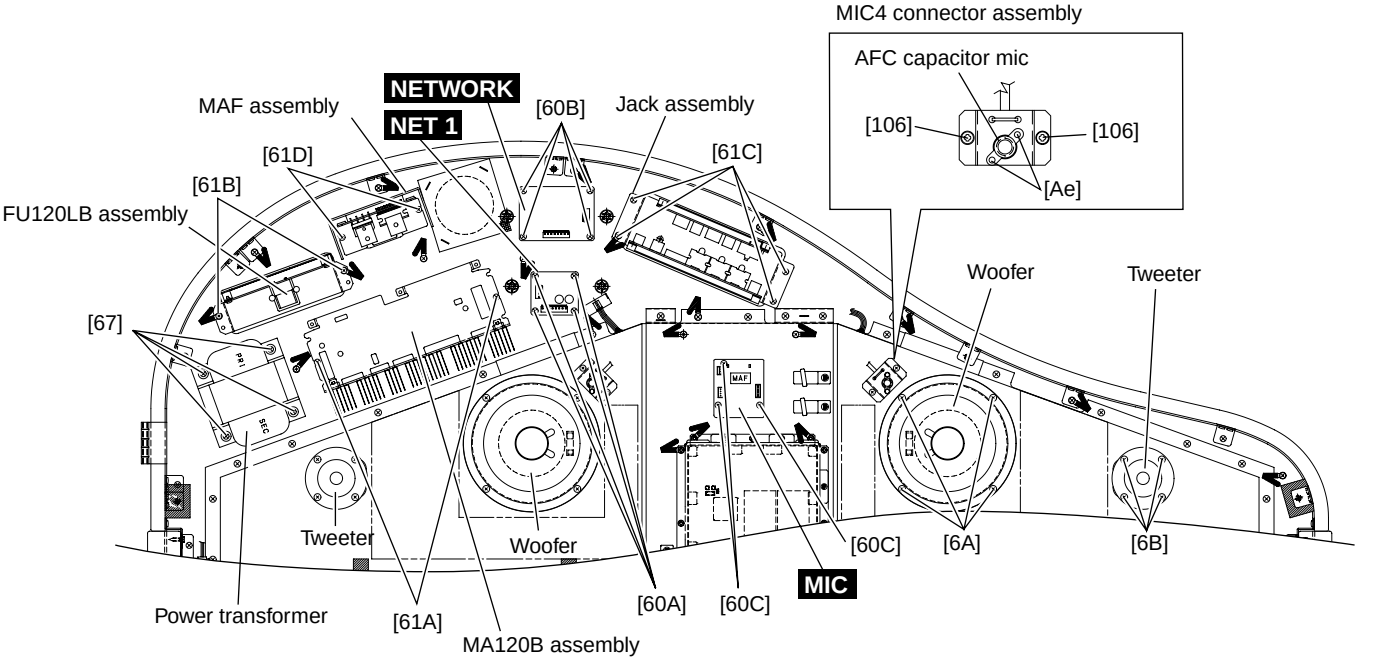

Fig. 2

6. DJK Circuit Board, AJK Circuit Board (Time required : About 10 minutes each)

6-1. Remove the top board (L) assembly (lid). (See procedure 2)

6-2. Remove the speaker grille assembly and the inner board assembly. (See procedure 4)

6-3. Remove the jack assembly. (See procedure 5)

6-4. Remove the six (6) screws marked [4A]. The DJK circuit board can then be removed. (Fig. 3)

6-5. Remove the five (5) screws marked [4B], the four (4) hexagonal nuts marked [6C] and the four (4) washer marked [5A]. The AJK circuit board can then be removed. (Fig. 3)

• Jack assembly

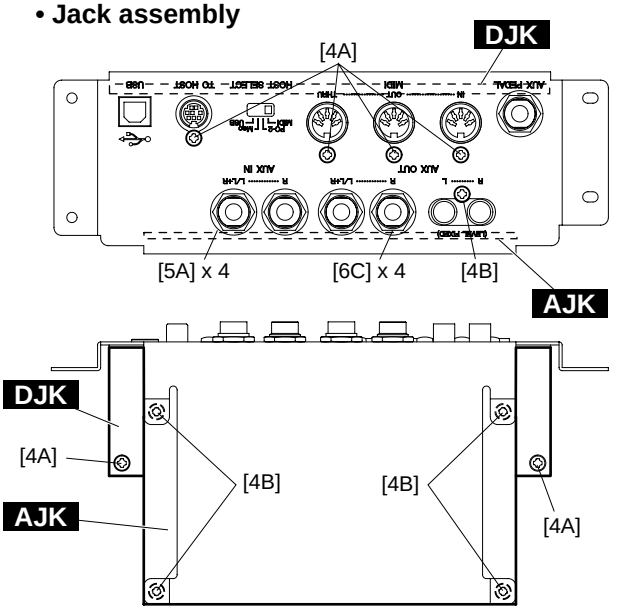

[4]: Bind Head Tapping Screw-B 3.0x8 MFZN2BL (EP600190)
[5A]: Washer (VJ869400)
[6C]: Hexagonal Nut 12.0 14x2 MFZN2BL (VB508600)

Fig. 3

7. MA120B Circuit Board

(Time required : About 10 minutes)

7-1. Remove the top board (L) assembly (lid). (See procedure 2)

7-2. Remove the speaker grille assembly and the inner board assembly. (See procedure 4)

7-3. Remove the MA120B assembly. (See procedure 5)

7-4. Remove the five (5) screws marked [1A], the four (4) screws marked [2A] and the screw marked [3A]. The MA120B circuit board can then be removed. (Fig. 4)

• MA120B assembly

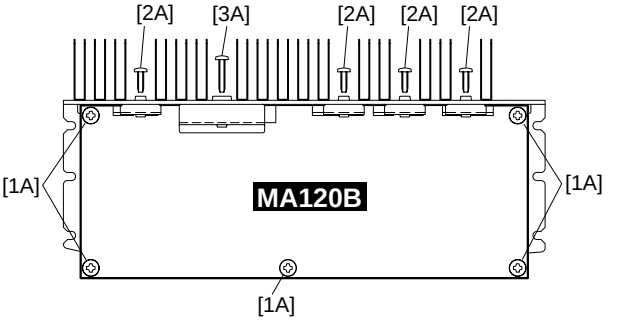

[1A]: Bind Head Tapping Screw-B 4.0x8 MFZN2Y (EP640410)
[2A]: Bind Head Tapping Screw-B 3.0x10 MFZN2Y (EP600220)
[3A]: Bind Head Tapping Screw-B 3.0x16 MFZN2Y (EP600390)

Fig. 4

8. FU120BL, FU120B (L) Circuit Board

(Time required : About 8 minutes)

8-1. Remove the top board (L) assembly (lid). (See procedure 2)

8-2. Remove the speaker grille assembly and the inner board assembly. (See procedure 4)

8-3. Remove the FU120LB assembly. (See procedure 5)

8-4. Remove the four (4) screws marked [1B]. The FU120BL , FU120B (L) circuit board can then be removed. (Fig. 5)

• FU120LB assembly

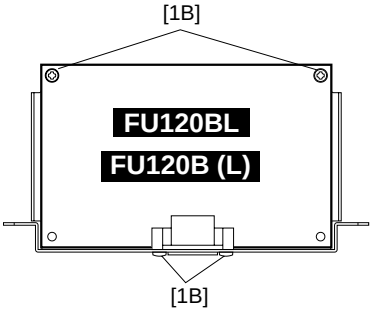

[1B]: Bind Head Tapping Screw-B 3.0x8 MFZN2BL (EP600190)

Fig. 5

9. MAF Circuit Board

(Time required : About 8 minutes)

9-1. Remove the top board (L) assembly (lid). (See procedure 2)

9-2. Remove the speaker grille assembly and the inner board assembly. (See procedure 4)

9-3 Remove the MAF assembly. (See procedure 5)

9-4 Remove the four (4) screws marked [1C], the screw marked [2B] and the screw marked [3B]. The MAF circuit board can then be removed. (Fig. 6)

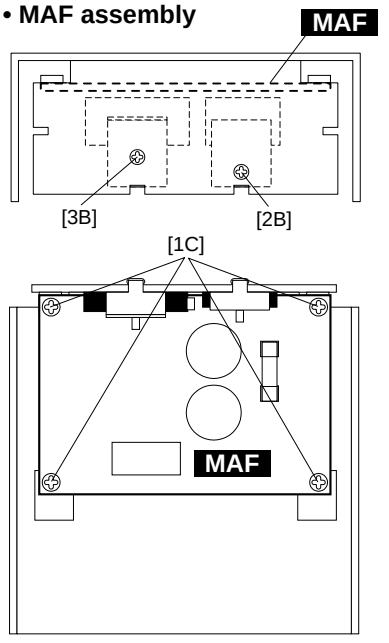

[1C]: Bind Head Tapping Screw-B 4.0x8 MFZN2Y (EP640410)
[2B]: Bind Head Tapping Screw-B 3.0x10 MFZN2Y (EP600220)
[3B]: Bind Head Tapping Screw-B 3.0x16 MFZN2Y (EP600390)

Fig. 6

10. Top Board (S) Assembly

(Time required : About 5 minutes)

10-1. Close the key cover.

10-2. Remove the music rest assembly. (See procedure 1)

10-3. Remove the top board (L) assembly (lid). (See procedure 2)

10-4. Remove the speaker grille assembly and the inner board assembly. (See procedure 4)

10-5. Raise top board (lid) stay L.

10-6. Move the top board (S) assembly forward, lift it. (Fig. 7)

* **When reinstalling the top board (S) assembly, be sure not to make scratches on the arm assembly L/R.**

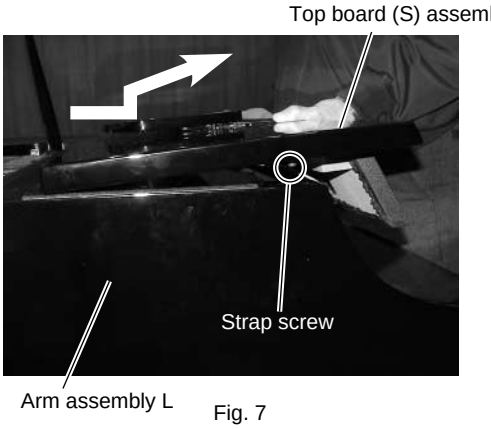

Fig. 7

Precautions for assembly

Note that there is a roof switch to turn ON/OFF the iAFC on the top board (lid) stay side. Depending on installation, the support bar receiver angle of the top board (S) assembly may contact and break the lever of the roof switch. To ensure proper installation, use care for the following points during assembly.

- Lift the top board (lid) stay a little first. (Fig. 8) If lifted as much as 90°, it may cause the lever of the roof switch to move close to the support bar receiver angle.
- With the left side face of the top board (S) assembly and the left side face of the arm assembly L aligned accurately, slide them rearward as they are.
  Also, when sliding these assemblies rearward, be careful not to cause damage to the front surface of the arm assembly L/R with the strap screw of the top board (S) assembly. (Fig. 7)

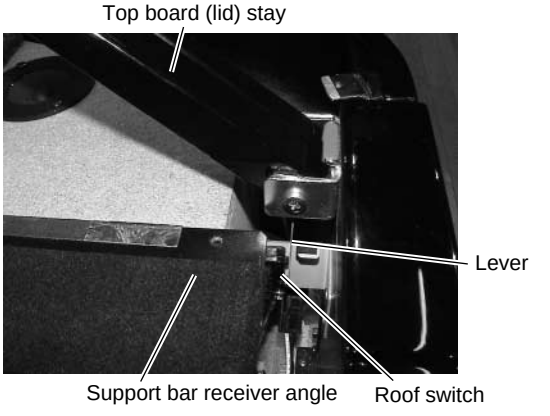

Fig. 8

11. DM Assembly

(Time required : About 7 minutes each)

11-1. Remove the music rest assembly. (See procedure 1)
11-2. Remove the top board (L) assembly (lid). (See procedure 2)
11-3. Remove the speaker grille assembly and the inner board assembly. (See procedure 4)
11-4. Remove the top board (S) assembly. (See procedure 10)
11-5. Remove the six (6) screws marked [65A]. The DM shield cover assembly can then be removed. (Fig. 9) (U.S.A. model only)
11-6. Remove the twelve (12) screws marked [65B]. The DM assembly can then be removed. (Fig. 9)

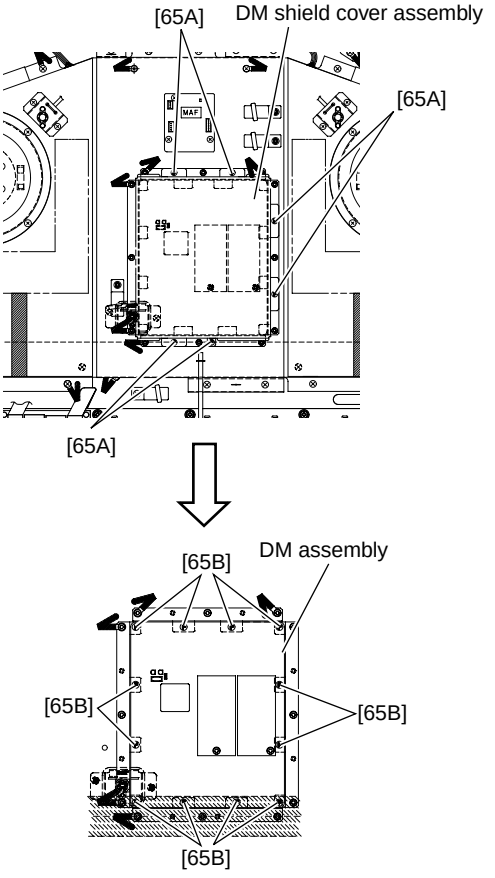

[65]: Bind Head Tapping Screw-B 3.0x8 MFZN2Y (EP600250)

Fig. 9

12. Monitor Speaker (L, R)

(Time required : About 7 minutes each)

12-1. Remove the music rest assembly. (See procedure 1)
12-2. Remove the top board (L) assembly (lid). (See procedure 2)
12-3. Remove the speaker grille assembly and the inner board assembly. (See procedure 4)
12-4. Remove the top board (S) assembly. (See procedure 10)
12-5. Remove the two (2) screws marked [14c]. The monitor speaker can then be removed from the top board (S) assembly. (Fig. 10)

* **The left and right monitor speaker each can then be removed in the same manner.**

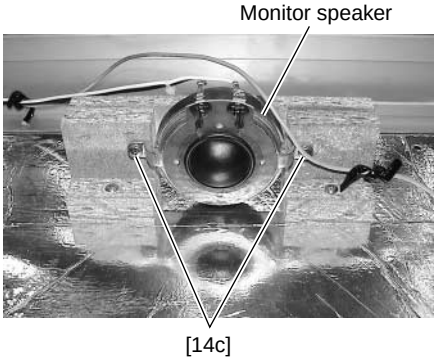

[14c]: Bind Head Tapping Screw-1 4.0x16 MFZN2Y (EP040170)

Fig. 10

13. AFC Capacitor Mic (in the top board (S) assembly)

(Time required : About 7 minutes each)

13-1. Remove the music rest assembly. (See procedure 1)
13-2. Remove the top board (L) assembly (lid). (See procedure 2)
13-3. Remove the speaker grille assembly and the inner board assembly. (See procedure 4)
13-4. Remove the top board (S) assembly. (See procedure 10)
13-5. Remove the two (2) screws marked [3b]. The MIC3 connector assembly can then be removed from the top board (S) assembly. (Fig. 11)

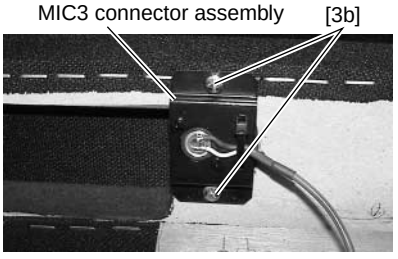

[3b]: Bind Head Tapping Screw-1 3.5x12 MFZN2Y (EP030240)

Fig. 11

13-6. Remove the two (2) plastic rivets marked [3ad]. The AFC capacitor mic can then be removed. (Fig. 12)

* **The left and right AFC capacitor mic each can then be removed in the same manner.**
* **For removal of the AFC capacitor mic on the speaker box assembly, refer to procedure 5.**

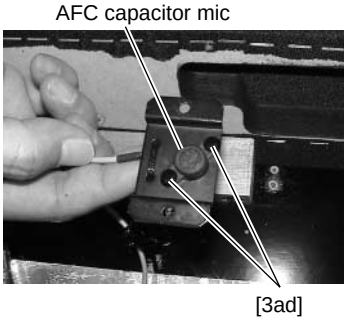

[3ad]: Plastic rivet P3065B (V9240700)

Fig. 12

14. Key Cover Assembly

(Time required : About 10 minutes)

14-1. Close the key cover.
14-2. Remove the music rest assembly. (See procedure 1)
14-3. Remove the top board (L) assembly (lid). (See procedure 2)
14-4. Remove the speaker grille assembly and the inner board assembly. (See procedure 4)
14-5. Remove the top board (S) assembly. (See procedure 10)
14-6. Remove the screw marked [65C]. The rack cover assembly L can then be removed. (Fig. 13)

* **The rack cover R can then be removed in the same manner.**

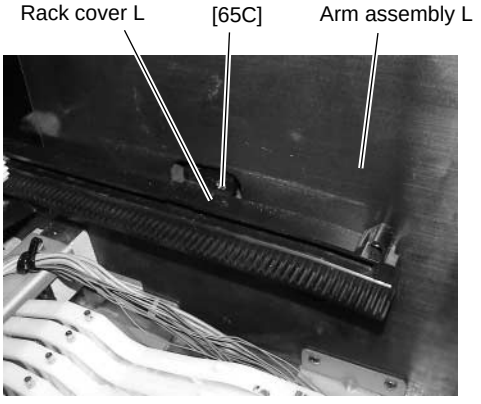

[65C]: Bind Head Tapping Screw-B 3.0x8 MFZN2Y (EP600250)

Fig. 13

14-7. Set the left end and the right end of the rod at the slits of the rack assembly and then lift the rear of the key cover assembly. (Fig. 14)
14-8. Lean slightly the key cover assembly so that the guide pin can be removed from the guide rail. (Fig. 15)

* **When removing, be sure not to make scratches on the side cover.**
* **When reinstalling the key cover assembly, apply a masking shield tape around the guide rail to prevent from making scratches on the assembly.**

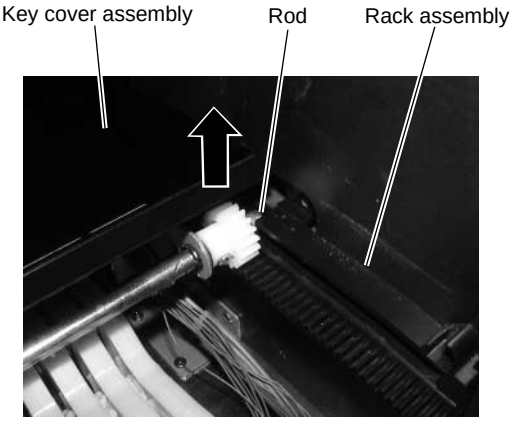

Fig. 14

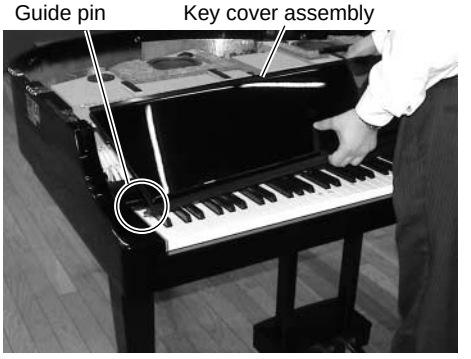

Fig. 15

15. Roof Switch

(Time required : About 8 minutes)

15-1. Remove the music rest assembly. (See procedure 1)
15-2. Remove the top board (L) assembly (lid). (See procedure 2)
15-3. Remove the top board (lid) stay L and S. (See procedure 3)
15-4. Remove the speaker grille assembly and the inner board assembly. (See procedure 4)
15-5. Remove the top board (S) assembly. (See procedure 10)
15-6. Remove the tow (2) screws marked [22c]. The roof switch can then be removed. (Fig. 16)

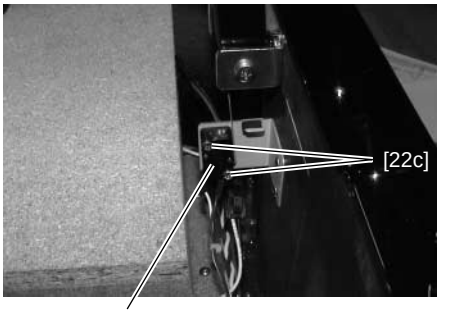

[22c]: Bind Head Screw 3.0x14 MFZN2Y (EG330260)

Fig. 16

16. Panel Assembly

(Time required : About 15 minutes)

16-1. Remove the music rest assembly. (See procedure 1)
16-2. Remove the top board (L) assembly (lid). (See procedure 2)
16-3. Remove the speaker grille assembly and the inner board assembly. (See procedure 4)
16-4. Remove the top board (S) assembly. (See procedure 10)
16-5. Remove the key cover assembly. (See procedure 14)
16-6. Remove the ten (10) screws marked [93A] and the two (2) screws marked [68]. The panel assembly can then be removed. (Fig. 17)
16-7. Install the inner board assembly.
16-8. Gradually turn over the panel assembly until it lies on the inner board.

17. End Block Assembly (L, R)

(Time required : About 15 minutes each)

17-1. Remove the music rest assembly. (See procedure 1)
17-2. Remove the top board (L) assembly (lid). (See procedure 2)
17-3. Remove the speaker grille assembly and the inner board assembly. (See procedure 4)
17-4. Remove the top board (S) assembly. (See procedure 10)
17-5. Remove the key cover assembly. (See procedure 14)
17-6. Remove the panel assembly. (See procedure 16)
17-7. Remove the screw marked [62A]. The end block assembly L can then be removed. (Fig. 17)

* **The left and right end block assembly each can then be removed in the same manner.**

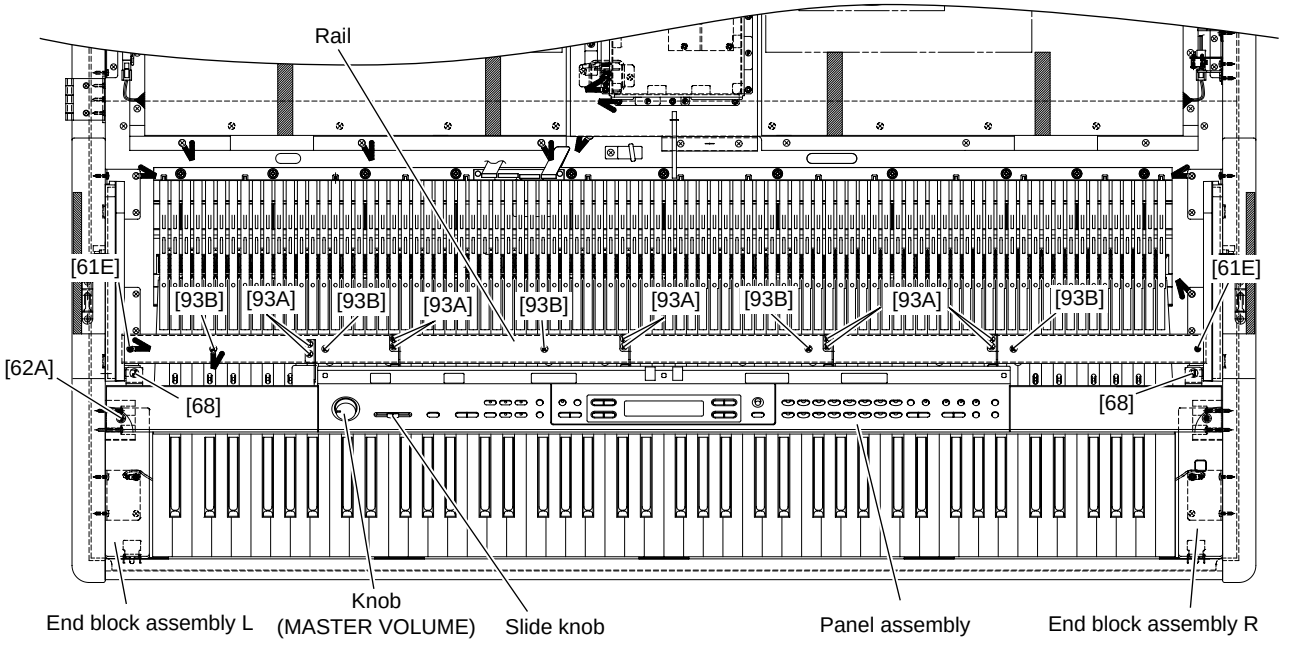

[61E]: Bind Head Tapping Screw-1 3.5x16 MFZN2Y (EP030190)
[62A]: Truss Head Tapping Screw-1 3.5x30 MFZN2Y (VA076400)
[68]: Bind Head Tapping Screw-B 4.0x10 MFZN2BL (EP600240)
[93]: Bind Head Screw 4.0x8 MFZN2Y (EG340080)

Fig. 17

18. Circuit Boards & Assemblies (Panel Assembly)

(Time required : About 20 minutes each)

18-1. Remove the music rest assembly. (See procedure 1)
18-2. Remove the top board (L) assembly (lid). (See procedure 2)
18-3. Remove the speaker grille assembly and the inner board assembly. (See procedure 4)
18-4. Remove the top board (S) assembly. (See procedure 10)
18-5. Remove the key cover assembly. (See procedure 14)
18-6. Remove the panel assembly. (See procedure 16)
18-7. Each circuit board and assembly can be removed by removing its fixing screws as listed below.

19. Power Switch Assembly

(Time required : About 15 minutes each)

19-1. Remove the music rest assembly. (See procedure 1)
19-2. Remove the top board (L) assembly (lid). (See procedure 2)
19-3. Remove the speaker grille assembly and the inner board assembly. (See procedure 4)
19-4. Remove the top board (S) assembly. (See procedure 10)
19-5. Remove the key cover assembly. (See procedure 14)
19-6. Remove the panel assembly. (See procedure 16)
19-7. Remove the end block assembly R. (See procedure 17)
19-7. Remove the tow (2) screws marked [8A]. The power switch assembly can then be removed from the end block assembly R. (Fig. 19)

Circuit board and Assembly	Ref. No.	Screw	QTY	Fig.
LCD Assembly	34A	Bind Head Tapping Screw-B 3.0x8 MFZN2Y (EP600250)	2	18
	35	Bind Head Tapping Screw-B 2.6x10 MFZN2Y (VD791000)	3	18
PNL Circuit Board		Slide knob (SONG BALANCE)	1	17
	34B	Bind Head Tapping Screw-B 3.0x8 MFZN2Y (EP600250)	16	18
PNR Circuit Board	34C	Bind Head Tapping Screw-B 3.0x8 MFZN2Y (EP600250)	21	18
MV1 Circuit Board		Knob (MASTER VOLUME)	1	17
	34D	Bind Head Tapping Screw-B 3.0x8 MFZN2Y (EP600250)	3	18
	B	Hexagonal Nut	1	18

• Panel assembly (Bottom view)

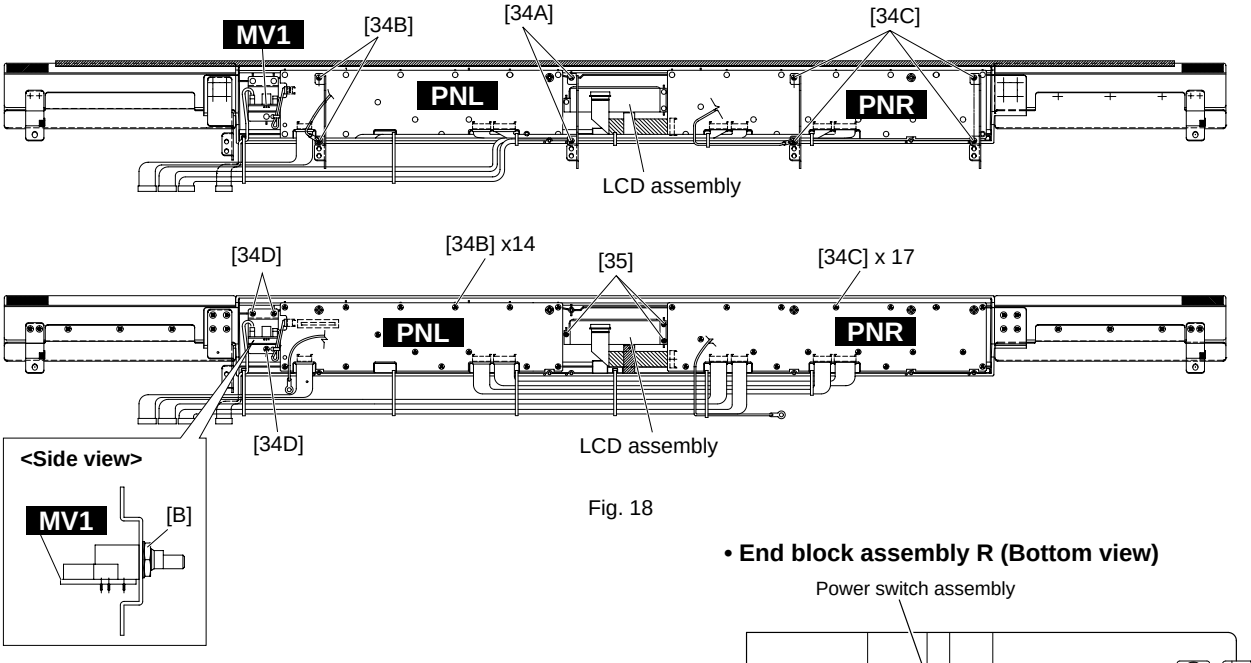

Fig. 18

• End block assembly R (Bottom view)

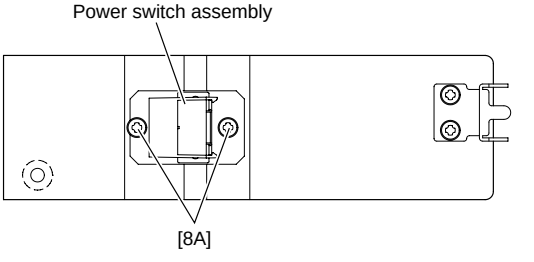

[8A]: Bind Head Tapping Screw-1 3.5x10 MFZN2BL (EP030320)

Fig. 19

20. Rack Assembly (L, R)

(Time required : About 20 minutes each)

20-1. Remove the music rest assembly. (See procedure 1)
20-2. Remove the top board (L) assembly (lid). (See procedure 2)
20-3. Remove the speaker grille assembly and the inner board assembly. (See procedure 4)
20-4. Remove the top board (S) assembly. (See procedure 10)
20-5. Remove the key cover assembly. (See procedure 14)
20-6. Remove the panel assembly. (See procedure 16)
20-7. Remove the tow (2) screws marked [61E] and the five (5) screws marked [93B]. The rail can then be removed. (Fig. 17)
20-8. Remove the four (4) screws marked [12]. The rack assembly L can then be removed. (Fig. 20)

* **The rack assembly R can then be removed in the same manner.**

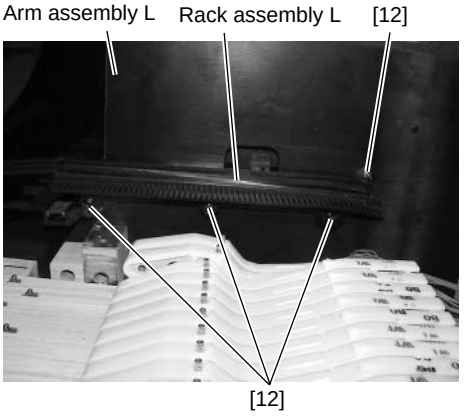

[12]: Bind Head Tapping Screw-1 3.5x20 MFZN2Y (EP030470)

Fig. 20

21. Back Top Board Assembly

(Time required : About 10 minutes)

21-1. Remove the music rest assembly. (See procedure 1)
21-2. Remove the top board (L) assembly (lid). (See procedure 2)
21-3. Remove the speaker grille assembly and the inner board assembly. (See procedure 4)
21-4. Remove the top board (S) assembly. (See procedure 10)
21-5. Remove the three (3) screws marked [78] respectively from both sides. (Fig. 21)
21-6. Remove the nine (9) screws marked [60D]. The back top board assembly can then be removed. (Fig. 22)

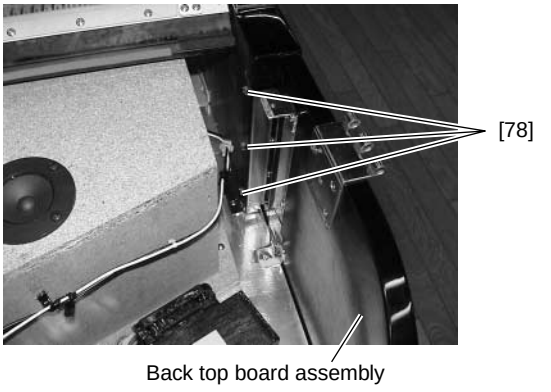

[78]: Hex. Head Tapping Screw-1 4.0x16 MFZN2Y (WA051000)

Fig. 21

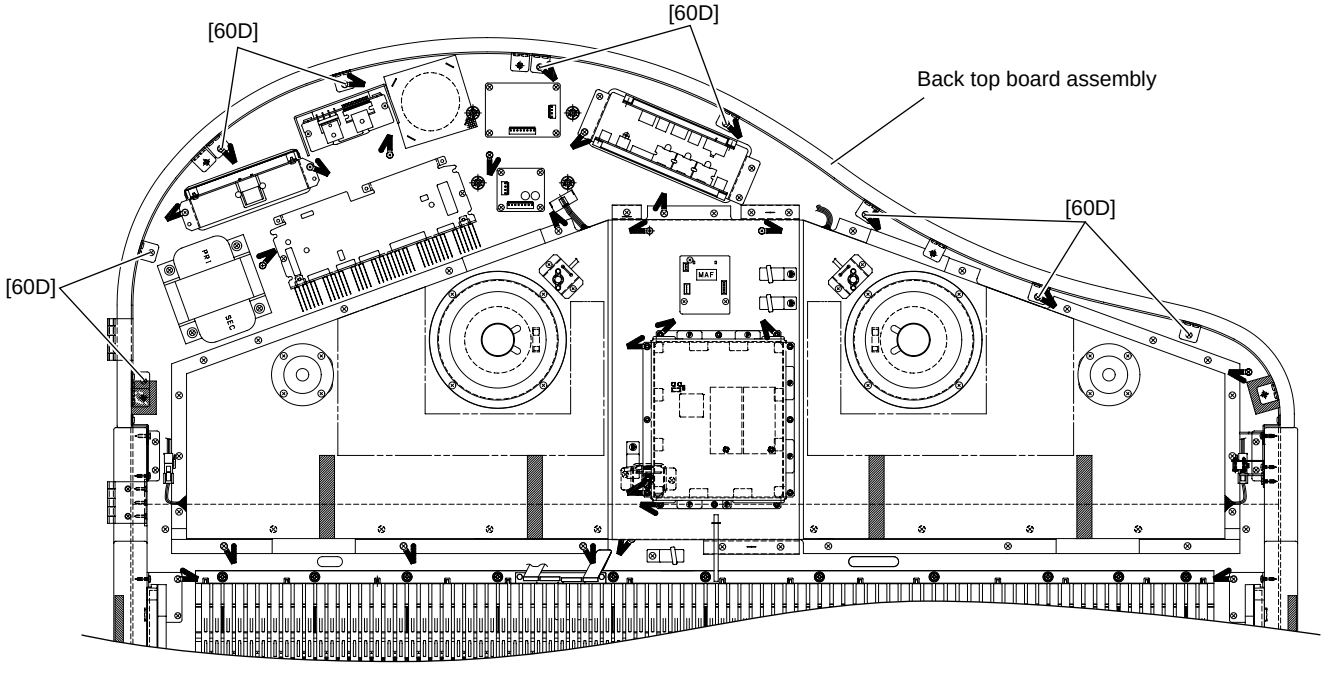

[60D]: Bind Head Tapping Screw-1 3.5x20 MFZN2Y (EP030470)

Fig. 22

22. Arm Assembly (L, R)

(Time required : About 25 minutes each)

22-1. Remove the music rest assembly. (See procedure 1)
22-2. Remove the top board (L) assembly (lid). (See procedure 2)
22-3. Remove the speaker grille assembly and the inner board assembly. (See procedure 4)
22-4. Remove the top board (S) assembly. (See procedure 10)
22-5. Remove the key cover assembly. (See procedure 14)
22-6. Remove the panel assembly. (See procedure 16)
22-7. Remove the rail. (See procedure 20-7)
22-8. Remove the end block assembly L. (See procedure 17)
22-9. Remove the eight (8) screws marked [60E] and the three (3) screws marked [78]. The arm assembly L can then be removed. (Fig21, Fig. 23)

*** The arm assembly R can then be removed in the same manner.**

*** Befor removing the arm assembly R, remove the top board (lid) stay L and S. (See procedure 3)**

23. Front Rail Assembly

(Time required : About 25 minutes each)

23-1. Remove the music rest assembly. (See procedure 1)
23-2. Remove the top board (L) assembly (lid). (See procedure 2)
23-3. Remove the speaker grille assembly and the inner board assembly. (See procedure 4)
23-4. Remove the top board (S) assembly. (See procedure 10)
23-5. Remove the key cover assembly. (See procedure 14)
23-6. Remove the panel assembly. (See procedure 16)
23-7. Remove the rail. (See procedure 20-7)
23-8. Remove the end block assembly L and R. (See procedure 17)
23-9. Lift and remove the white keys numbered as 1, 15, 16, 18, 42, 44, 45, 47, 66, 68, 69, 88. (Fig. 23)
23-10. Remove the ten (10) screws marked [64A]. The front rail assembly can then be removed. (Fig. 23)

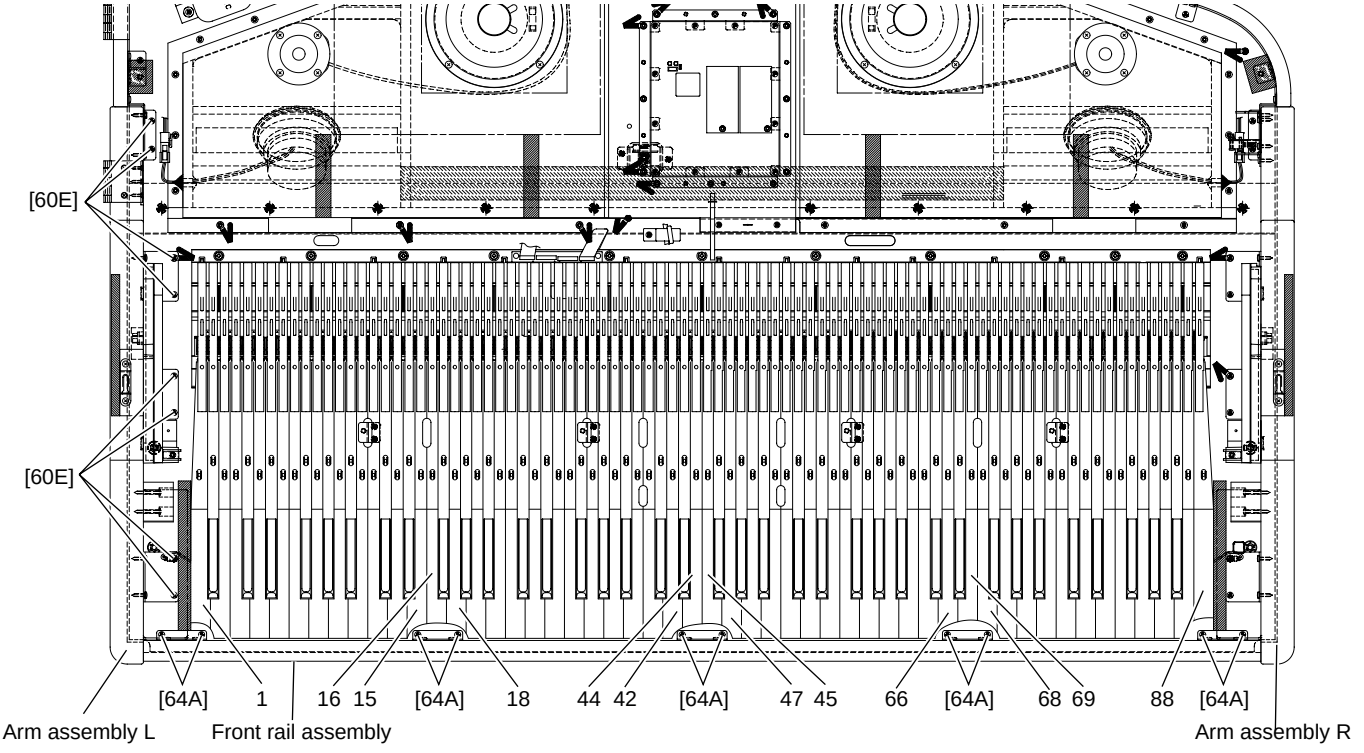

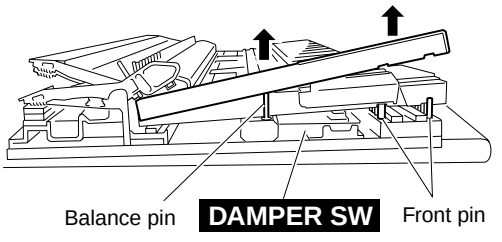

[60E]: Bind Head Tapping Screw-1 3.5x20 MFZN2Y (EP030470)
[64A]: Bind Head Tapping Screw-1 3.5x16 MFZN2BL (EP030260)

Fig. 23

24. Headphones Jack Unit, HP Circuit Board

(Time required : About 3 minutes)

24-1. Remove the four (4) screws marked [64B]. The headphones jack unit can then be removed. (Fig. 24)

24-2. Remove the tow (2) hexagonal nuts marked [30] and the tow (2) washers marked [40]. The HP circuit board can then be removed. (Fig. 24)

25. Floppy Disk Drive

(Time required : About 3 minutes)

25-1. Remove the four (4) screws marked [64C]. The FDD unit can then be removed. (Fig. 24)

25-2. Remove the four (4) screws marked [8B]. The FDD cover can then be removed. (Fig. 24)

25-3. Remove the screw marked [3C]. The GND wire can then be removed. (Fig. 24)

25-4. Remove the three (3) screws marked [3D]. The FDD holder can then be removed from the floppy disk drive. (Fig. 24)

26. AFC Speaker

(Time required : About 5 minutes)

26-1. Remove the thirteen (13) screws marked [9f]. The metal net can then be removed. (Fig. 24)

26-2. Remove the four (4) screws marked [7]. The AFC speaker can then be removed. (Fig. 25)

* **The left and right AFC speaker each can then be removed in the same manner.**

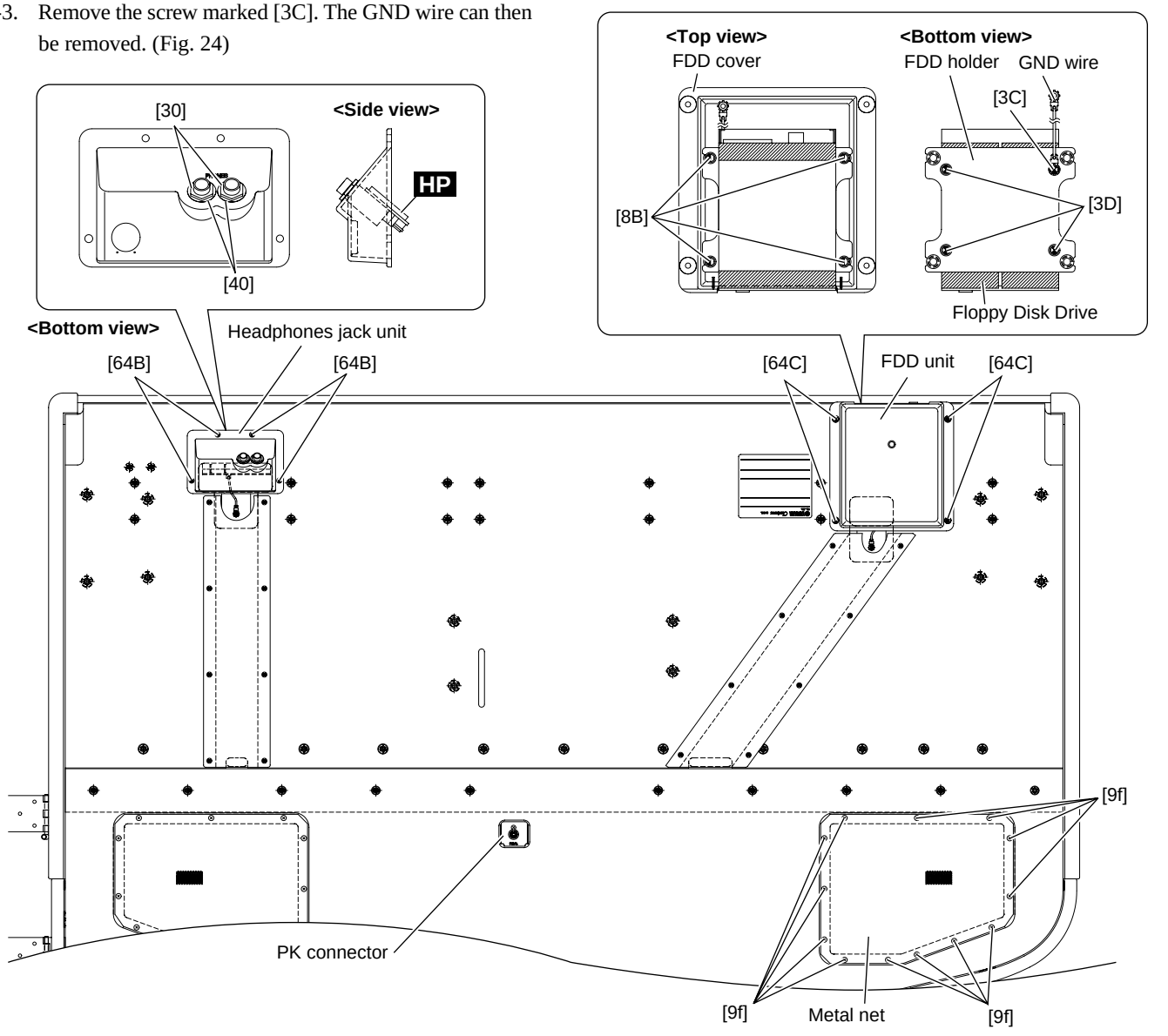

[3]: Bind Head Screw 3.0x5 MFZN2Y (EG330150)

[8B]: PW Head Tapping Screw-B 3.0x8-8 MFZN2BL (V2276900)

[9f]: Truss Head Tapping Screw 3.5x12 MFZN2BL (VV452700)

[30]: Hexagonal Nut 12.0 14x2 MFZN2BL (VB508600)

[40]: Washer (VJ869400)

[64]: Bind Head Tapping Screw-1 3.5x16 MFZN2BL (EP030260)

Fig. 24

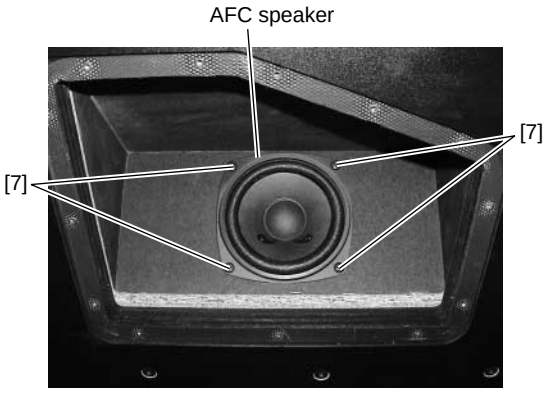

[7]: Bind Head Tapping Screw-1 4.0x16 MFZN2BL (EP040250)
Fig. 25

27. Pedal Box Unit, Pedal Assembly

(Time required : About 5 minutes)

27-1. Rotate the adjuster until it comes off the floor surface.
27-2. Disconnect the PK-LF cable. (Fig. 26)
27-3. Remove the four (4) screws marked [S1A]. The pedal box unit can then be removed. (Fig. 26)
27-4. Remove the nine (9) screws marked [5B]. The pedal assembly can then be removed. (Fig. 27)

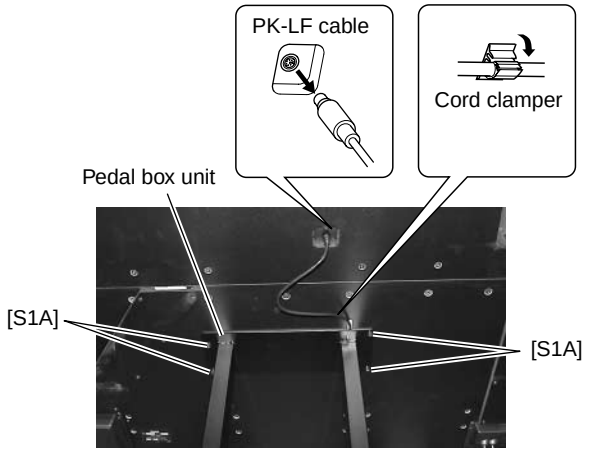

[S1A]: Pan Head Screw SW 6.0x25 MFZN2BL (VP158800)
Fig. 26

• Bottom view

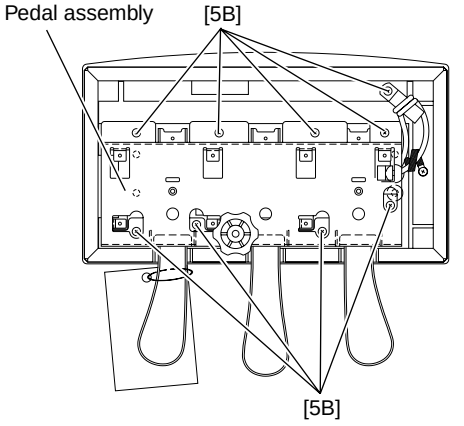

[5B]: Bind Head Tapping Screw-1 4.0x14 MFZN2Y (EP040230)
Fig. 27

28. Leg Assembly

(Time required : About 10 minutes)

*** For safety, this work should be done by two persons.**

28-1. Lay the unit on the floor as shown in the figure 28.
28-2. Remove the four (4) screws marked [S1B]. The leg assembly can then be removed. (Fig. 29)

*** The front left, front right and rear leg assembly each can then be removed in the same manner.**

How to position the main unit

Spread a large soft cloth, such as a blanket, on the floor. Place the unit on the cloth with the key cover closed and the keyboard side on the bottom and lean the unit against the wall so that the unit will not fall or slip.
Place a soft cloth against the wall to protect the instrument and the wall from scratches.

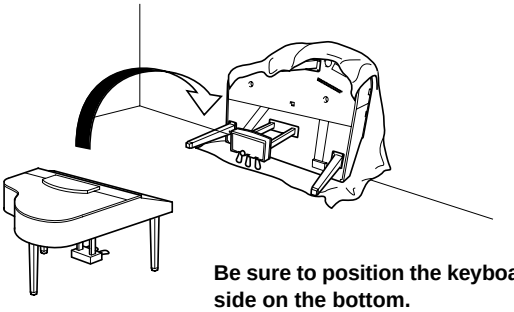

Be sure to position the keyboard side on the bottom.

Fig. 28

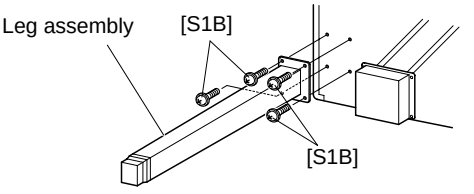

[S1B]: Pan Head Screw SW 6.0x25 MFZN2BL (VP158800)
Fig. 29

Refer to the diagram below to verify the orientation of the legs.

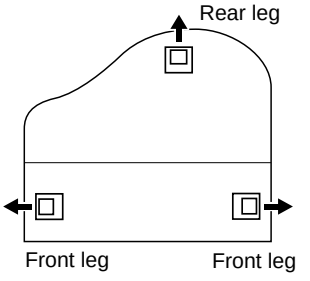

29. Speaker Box Assembly

(Time required : About 10 minutes each)

29-1. Remove the music rest assembly. (See procedure 1)
29-2. Remove the top board (L) assembly (lid). (See procedure 2)
29-3. Remove the speaker grille assembly and the inner board assembly. (See procedure 4)
29-4. Remove the MIC circuit board and the MIC4 connector assembly. (See procedure 5)
29-5. Remove the top board (S) assembly. (See procedure 10)
29-6. Remove the DM assembly. (See procedure 11)
29-7. Remove the twenty four (24) screws marked [62B] and the five (5) screws marked [63]. The speaker box assembly can then be removed. (Fig. 30)

30. PEDAL (DJK) Circuit Board

(Time required : About 10 minutes)

30-1. Disconnect the PK-LF cable. (Fig. 26)
30-2. Remove the music rest assembly. (See procedure 1)
30-3. Remove the top board (L) assembly (lid). (See procedure 2)
30-4. Remove the speaker grille assembly and the inner board assembly. (See procedure 4)
30-5. Remove the top board (S) assembly. (See procedure 10)
30-6. Remove the speaker box assembly. (See procedure 28)
30-7. Remove the two (2) screws marked [61F]. The PK connector can then be removed. (Fig. 30)
30-8. Remove the two (2) screws marked [88c]. The PK connector angle can then be removed from the PEDAL (DJK) circuit board. (Fig. 30)

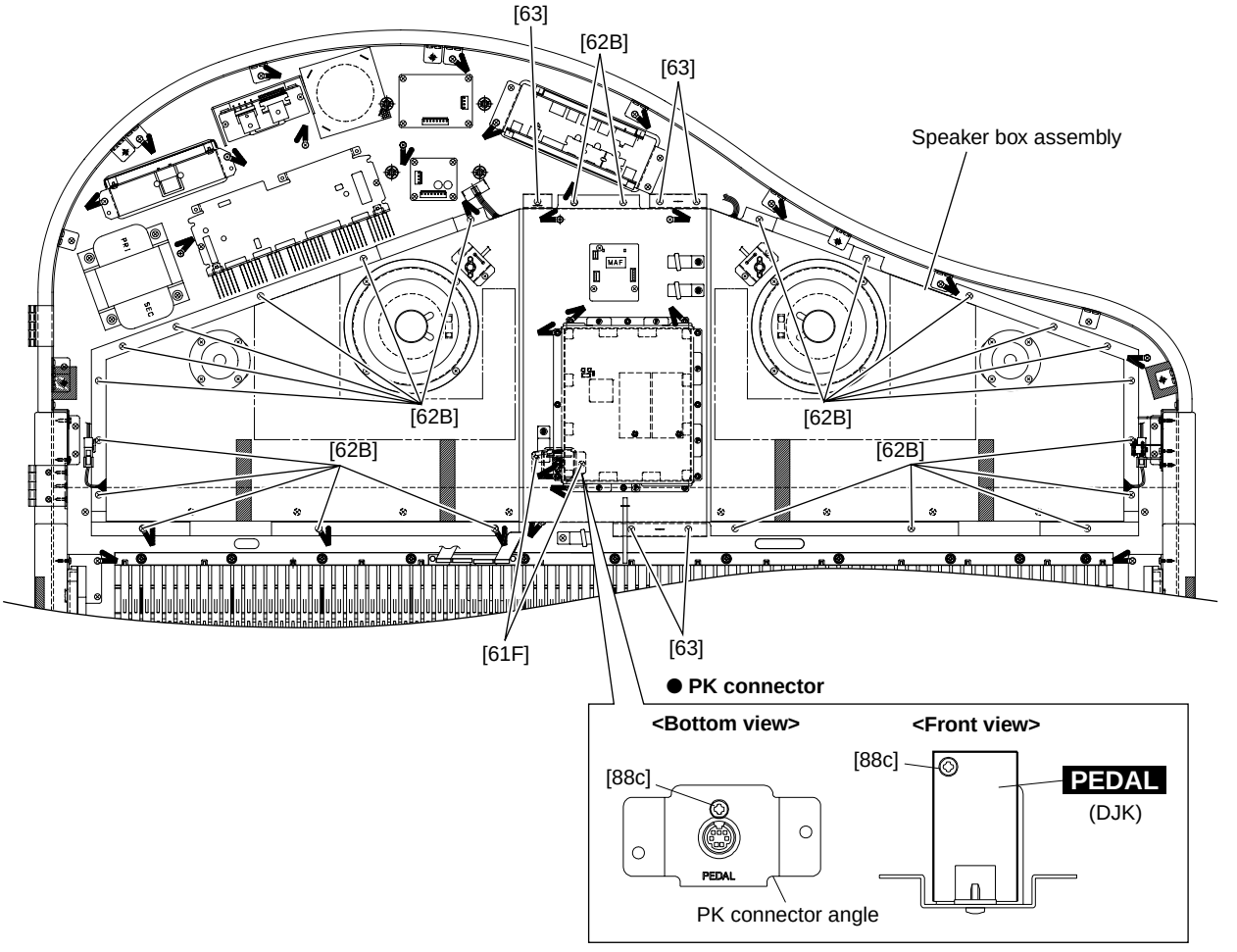

[61F]: Bind Head Tapping Screw-1 3.5x16 MFZN2Y (EP030190)
[62B]: Truss Head Tapping Screw-1 3.5x30 MFZN2Y (VA076400)
[63]: Truss Head Tapping Screw-1 3.5x14 MFZN2Y (EN630230)
[88c]: Bind Head Tapping Screw-B 3.0x8 MFZN2BL (EP600190)

Fig. 30

31. Keyboard Assembly

(Time required : About 30 minutes)

31-1. Remove the music rest assembly. (See procedure 1)
31-2. Remove the top board (L) assembly (lid). (See procedure 2)
31-3. Remove the speaker grille assembly and the inner board assembly. (See procedure 4)
31-4. Remove the top board (S) assembly. (See procedure 10)
31-5. Remove the key cover assembly. (See procedure 14)
31-6. Remove the panel assembly. (See procedure 16)
31-7. Remove the rail. (See procedure 20-7)
31-8. Remove the end block assembly L. (See procedure 17)

31-9. **White keys and black keys**

Lift each white key or black key and remove it from the front pin and balance pin. (Fig. 31)
When removing white keys numbered as 15, 57, 75 and black keys 34, remove the required number of screws marked [61G] to remove the panel stay G and then they can be removed. (Fig. 32)

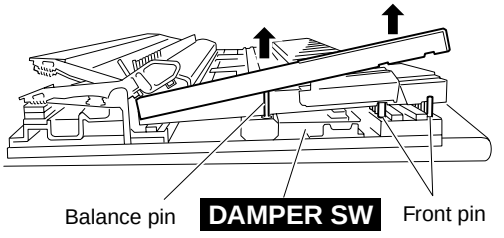

Fig. 31

31-10. **Hammer**

Remove the white key or black key. (See procedure 31-9)
There are twelve kinds of hammers that differ in weight. (See the table below.)
Paying attention to the type difference, remove each hammer as shown in the figure.

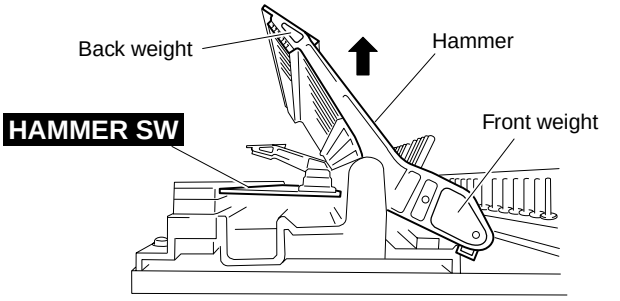

Fig. 33

Part Name	Range for Applicable Tone Name	Key No.
Hammer, W1	A-1–G0	1–11
Hammer, W2	A0–F1	13–21
Hammer, W3	G1–F2	23–33
Hammer, W4	G2–E3	35–44
Hammer, W5	F3–D5	45–66
Hammer, W6	E5–C7	68–88
Hammer, B0	A#-1–E#0	2–10
Hammer, B1	G#1–F#1	12–22
Hammer, B2	G#1–D#2	24–31
Hammer, B3	F#2–D#3	34–43
Hammer, B4	F#3–C#5	46–65
Hammer, B5	D#5–A#6	67–86

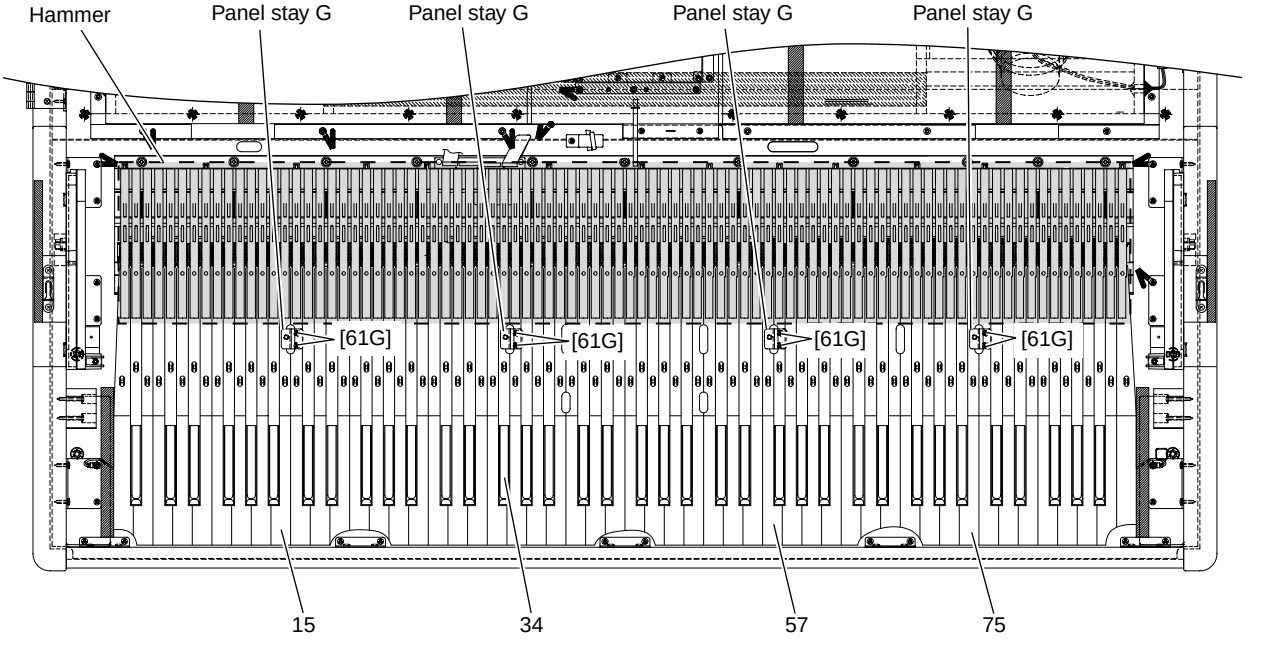

[61G]: Bind Head Tapping Screw-1 3.5x16 MFZN2Y (EP030190)

Fig. 32

31-11. **DAMPER SW Circuit Board**
(Time required : About 20 minutes each)

31-11-1. Remove the white key, black key.
(See procedure 31-9)

31-11-2. Remove the fourteen (14) screws marked [19A]. The DAMPER SW-L circuit board can then be removed. (Fig. 34)

31-11-3. Remove the twenty-one (21) screws marked [19B]. The DAMPER SW-H circuit board can then be removed. (Fig. 34)

31-12. **HAMMER SW Circuit Board**
(Time required : About 30 minutes each)

31-12-1. Remove the white key, black key.
(See procedure 31-9)

31-12-2. Remove the hammer. (See procedure 31-10)

31-12-3. Remove the seven (7) screws marked [27A]. (Fig. 34)
Lift the lower part of the HAMMER SW-L circuit board and then pull out the sheet. (Fig. 35)

31-12-4. Remove the ten (10) screws marked [27B]. (Fig. 34)
Lift the lower part of the HAMMER SW-H circuit board and then pull out the sheet. (Fig. 35)

31-13. **RELAY Circuit Board**
(Time required : About 5 min.)
Remove the tow (2) screws marked [27C]. The RELAY circuit board can then be removed. (Fig. 34)

31-14. **Fitting the Rubber Contact**
(DAMPER SW circuit board & HAMMER SW circuit board)
Using a clip or the like as shown in the figure 36, fit the rubber contact to the circuit board securely.

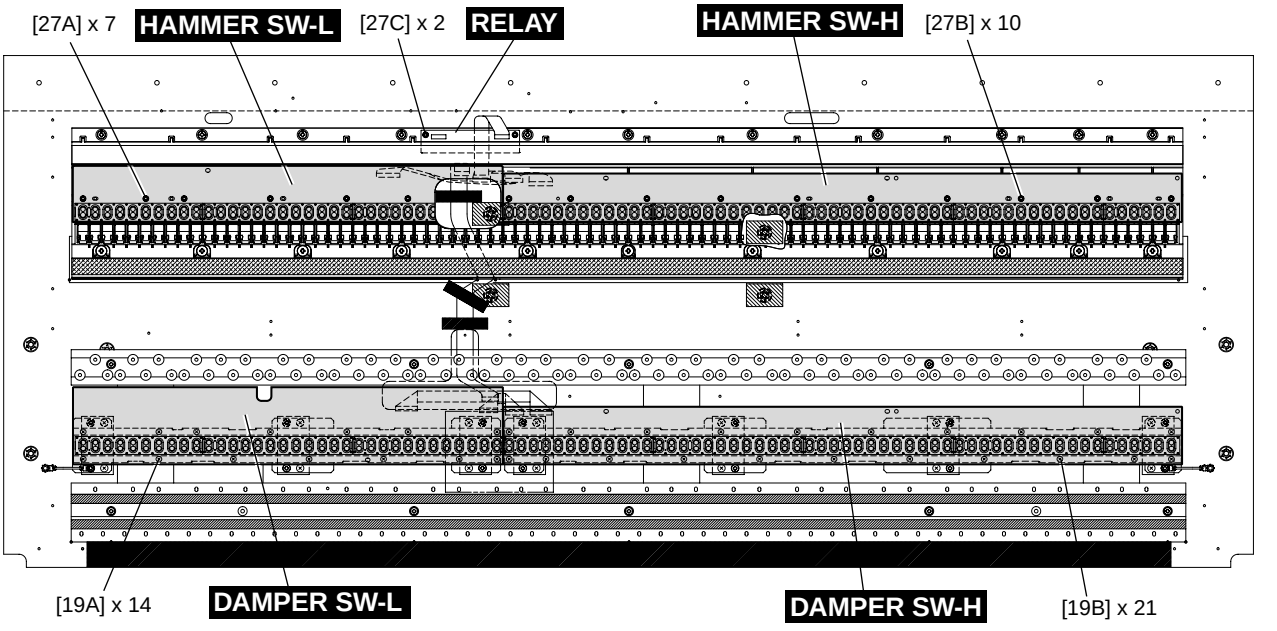

[19]: Bind Head Tapping Screw-B 3.0x6 MFZN2Y (EP600130)
[27]: Bind Head Tapping Screw-B 3.0x10 MFZN2Y (EP600220)

Fig. 34

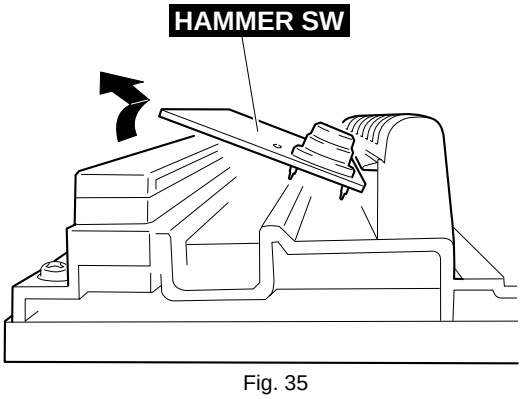

Fig. 35

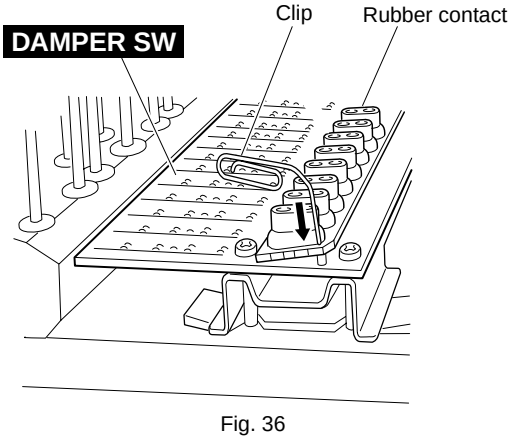

Fig. 36

■ LSI PIN DESCRIPTION

AK4393-VF-E2 (XW029A00) **DAC** (Digital to Analog Converter) 25

HD63266F (XI939A00) **FDC** (Floppy Disk Controller) 21

HD6417709SHF200B (X2687A00) **CPU** (SH3) 24

HD64F3694 (X3703A00) **LKS** 27

M66291GP (X2156A00) **USB Controller** 25

PCM1730E-1/2K (X2077A00) **DAC** (Digital to Analog Converter) 25

PCM1800E/2K (XU770A00) **ADC** (Analog to Digital Converter) 26

T8F02TB-0102 (X0060A00) **SWP50** (Tone Generator) 22

μ**PD780031AYGK-N01-9ET** (XZ916100) **LED DRIVER/SWITCH SCAN E-PNS2a** 26

μ**PD78F9026AGB-8FL** (X3704A00) **LKS** 27

● **HD63266F** (XI939A00) **FDC** (Floppy Disk Controller)

DM: IC001

PIN NO.	NAME	I/O	FUNCTION	PIN NO.	NAME	I/O	FUNCTION
1	8"//5"	I	Data transmission speed	33	/TRKO	I	Track 00 signal
2	XTALSET	I	Clock select	34	/INDEX	I	Index signal
3	/RESET	I	Rest	35	/RDATA	I	Read data input from FDD
4	E//RD	I	Enable/Read	36	XTAL2		Clock
5	RW//WR	I	Read/write/Write	37	EXTAL2		
6	/CS	I	Chip select	38	NC		
7	/DACK	I	DMA acknowledge	39	XTAL1		Clock
8	RS0	I	Register select	40	EXTAL1		
9	RS1	I		41	VSS4		Ground
10	VSS1		Ground	42	VSS5		
11	VSS2			43	NC		
12	D0	I/O	Data bus	44	VCC2		Power supply
13	D1	I/O		45	VCC3		
14	D2	I/O		46	VCC4		
15	D3	I/O		47	/WGATE	O	Write control
16	D4	I/O		48	/WDATA	O	Writ data to FDD
17	D5	I/O		49	VSS6		Ground
18	D6	I/O		50	/STEP	O	Step signal to control head of FDD
19	D7	I/O		51	/HDIR	O	Direction
20	/DREQ	O	DMA request	52	/HLOAD	O	Head load
21	/IRQ	O	Interrupt request	53	/HSEL	O	Head select
22	/DEND	I	Data end	54	VSS7		Ground
23	VSS3		Ground	55	/DS0	O	Drive select
24	1/2 EX1			56	/DS1	O	
25	VCC1		Power supply	57	/DS2	O	
26	NUM1	I		58	/DS3	O	
27	NUM3	I		59	VSS8		Ground
28	IFS	I	Host interface select	60	/MON0	O	Motor on
29	SFORM	I	Format data	61	/MON1	O	
30	/INP	I	Index pulse	62	/MON2	O	
31	/READY	I	Ready from FDD	63	/MON3	O	
32	/WPRT	I	Write control signal	64	VSS9		Ground

● **T8F02TB-0102** (X0060A00) **SWP50** (Tone Generator)

DM: IC012

PIN NO.	OUTER NO.	NAME	I/O	FUNCTION	PIN NO.	OUTER NO.	NAME	I/O	FUNCTION
1	E5	VSS2	-	Ground	106	E22	VSS2	-	Ground
2	D4	VDDC	-	Power supply +1.5 V	107	D23	VDDC	-	Power supply +1.5 V
3	C3	CD15	I/O	Data bus of internal register	108	C24	HMA15	O	Wave memory address bus
4	B2	CD13	I/O		109	B25	HMA16	O	
5	A1	CD14	I/O		110	A26	HMA22	O	
6	D5	CD6	I/O		111	E23	HMA25	O	
7	E6	CD2	I/O		112	F22	VDDS	-	Power supply +3 V
8	C4	CD9	I/O		113	D24	HMA27	O	Wave memory address bus
9	B3	CD11	I/O		114	C25	HMA0	O	
10	A2	CD12	I/O		115	B26	HMA23	O	
11	A3	CD10	I/O		116	C26	HMA24	O	
12	D6	CD1	I/O		117	F23	VDDS	-	Power supply +3 V
13	E7	VSS	-	Ground	118	G22	HMA26	O	Wave memory address bus
14	C5	CD5	I/O	Data bus of internal register	119	E24	HMA30	O	
15	B4	CD8	I/O		120	D25	HMA28	O	
16	A4	CD7	I/O		121	D26	HMA29	O	
17	D7	VSS2	-	Ground	122	G23	LMA17	O	Wave memory address bus (Lower data memory)
18	C6	CD0	I/O	Data bus of internal register	123	F24	LMA19	O	
19	E8	VSS	-	Ground	124	H22	VSS	-	Ground
20	D8	VDDS	-	Power supply +3 V	125	H23	VDDS	-	Power supply +3 V
21	B5	CD4	I/O	Data bus of internal register	126	E25	LMA20	O	Wave memory address bus (Lower data memory)
22	A5	CD3	I/O		127	E26	LMA21	O	
23	C7	CA2	I	Address bus of internal regisuter	128	G24	LMA9	O	
24	B6	CA0	I		129	F25	LMA18	O	
25	E9	CA8	I		130	J22	LMA12	O	
26	D9	CA9	I		131	J23	LMA4	O	
27	C8	CA5	I		132	H24	LMA6	O	
28	A6	CA1	I		133	F26	LMA8	O	
29	B7	CA3	I		134	G25	LMA7	O	
30	A7	CA4	I		135	G26	LMA10	O	
31	E10	VSS2	-	Ground	136	K22	VSS2	-	Ground
32	D10	VDDC	-	Power supply +1.5 V	137	K23	VDDC	-	Power supply +1.5 V
33	C9	CA10	I	Address bus of internal regisuter	138	J24	LMA13	O	Wave memory address bus (Lower data memory)
34	B8	CA6	I		139	H25	LMA11	O	
35	A8	CA7	I		140	H26	LMA5	O	
36	B9	CA11	I		141	J25	LMA3	O	
37	E11	CA14	I		142	L22	LMA16	O	
38	D11	CA15	I		143	L23	LMA0	O	
39	C10	CA13	I		144	K24	LMA2	O	
40	A9	CA12	I		145	J26	LMA14	O	
41	B10	CSN0	I	Chip select	146	K25	LMA15	O	
42	A10	CSN1	I		147	K26	LMA1	O	
43	E12	VSS	-	Ground	148	M22	VSS	-	Ground
44	D12	VDDS	-	Power supply +3 V	149	M23	VDDS	-	Power supply +3 V
45	C11	WRN	I	Write strobe	150	L24	LMA22	O	Wave memory address bus (Lower data memory)
46	B11	RDN	I	Read strobe	151	L25	LMA23	O	
47	A11	WAIT0	O	Hardware wait request	152	L26	LMA24	O	
48	C12	IRQ0	O	Interrupt request	153	M24	LMA27	O	
49	B12	DREQ0	O		154	M25	LMA28	O	
50	E13	TCK	I	Test pin	155	N22	LMA25	O	
51	D13	TRST	I		156	N23	LMA26	O	
52	C13	VSS	-	Ground	157	N24	LMA30	O	
53	A12	XO	O	Crystal osc. output	158	M26	LMA29	O	
54	B13	XI	I	Crystal osc. input	159	N25	MOEN	O	Wave memory output enable
55	A13	VDDS	-	Power supply +3 V	160	N26	MWEN	O	Wave memory write enable
56	A14	SLAVE	I	Master/Slave select	161	P26	LMD15	I/O	Wave memory data bus (Lower 16 bit)
57	E14	TMS	I	Test pin	162	P22	VSS	-	Ground
58	D14	TDO	O		163	P23	VDDS	-	Power supply +3 V
59	C14	ICN	I	Initial clear	164	P24	LMD13	I/O	Wave memory data bus (Lower 16 bit)
60	B14	RFCLK0	O	PLL Clock	165	P25	LMD14	I/O	
61	B15	PLL_TSTN	I	Power supply	166	R25	LMD11	I/O	
62	C15	PLL_BP	I		167	R24	LMD10	I/O	
63	D15	VDDS	-	Power supply +3 V	168	R23	VDDS	-	Power supply +3 V
64	E15	VSS	-	Ground	169	R22	VSS	-	Ground
65	A15	RFCLK1	I	PLL Clock	170	R26	LMD12	I/O	Wave memory data bus (Lower 16 bit)
66	A16	VDDC	-	Power supply +1.5 V	171	T26	LMD9	I/O	
67	B16	TMODE	I	Test pin	172	T25	LMD8	I/O	
68	C16	PLL_AVD	-	Power supply (PLL)	173	T24	LMD7	I/O	
69	D16	NC	-	Not used	174	T23	VSS2	-	Ground
70	E16	NC	-	Not used	175	T22	VSS	-	Ground
71	A17	PLL_AVS	-	Power supply (PLL)	176	U26	LMD6	I/O	Wave memory data bus (Lower 16 bit)
72	B17	TEST1	I	Test pin	177	U25	LMD5	I/O	
73	A18	VSS	-	Ground	178	V26	LMD3	I/O	
74	C17	SY1	I	Sync. clock	179	U24	LMD4	I/O	
75	D17	VDDC	-	Power supply +1.5 V	180	U23	VDDC	-	Power supply +3 V
76	E17	VSS2	-	Ground	181	U22	VSS2	-	Ground
77	B18	KONTRG0	O	Key on data	182	V25	LMD2	I/O	Wave memory data bus (Lower 16 bit)
78	A19	KONTRG1	I		183	W26	LMD0	I/O	
79	C18	CK512	O		184	V24	LMD1	I/O	
80	B19	CK128	O	Master clock (256 Fs)	185	W25	DCSL0	O	
81	D18	BCLK	O	Master clock (64 Fs)	186	V23	VDDS	-	Power supply +3 V
82	E18	SY0	O	Sync. clock	187	V22	VDDC	-	Power supply +1.5 V
83	C19	HMA20	O	Wave memory address bus	188	W24	DCSL1	O	
84	A20	HMA21	O		189	Y26	DQML3	O	MASK signal
85	B20	HMA19	O		190	Y25	DQML1	O	
86	C20	HMA18	O		191	Y24	DMAL14	O	Address bus (DIMM, SDRAM)
87	D19	VDDS	-	Power supply +1.5 V	192	W23	VDDS	-	Power supply +3 V
88	E19	VSS	-	Ground	193	W22	VSS	-	Ground
89	A21	HMA9	O	Wave memory address bus	194	AA26	DMAL13	O	Address bus (DIMM, SDRAM)
90	B21	HMA7	O		195	AA25	DMAL12	O	
91	A22	HMA6	O		196	AB26	DMAL9	O	
92	D20	HMA8	O		197	Y23	VSS	-	Ground
93	C21	HMA10	O		198	AA24	DMAL11	O	Address bus (DIMM, SDRAM)
94	E20	HMA17	O		199	Y22	VSS	-	Ground
95	D21	VDDS	-	Power supply +1.5 V	200	AA23	DMAL10	O	Address bus (DIMM, SDRAM)
96	B22	HMA11	O	Wave memory address bus	201	AB25	DMAL8	O	
97	A23	HMA4	O		202	AC26	DMAL6	O	
98	C22	HMA5	O		203	AB24	DMAL7	O	
99	B23	HMA13	O		204	AC25	DMAL5	O	
100	E21	VSS	-	Ground	205	AA22	VSS2	-	Ground
101	D22	HMA12	O	Wave memory address bus	206	AB23	VSS	-	Ground
102	C23	HMA3	O		207	AC24	DMAL4	O	Address bus (DIMM, SDRAM)
103	A24	HMA14	O		208	AD26	DMAL3	O	
104	B24	HMA2	O		209	AD25	DMAL2	O	
105	A25	HMA1	O		210	AE26	DMAL0	O	

PIN NO.	OUTER NO.	NAME	I/O	FUNCTION
211	AB22	VSS2	-	Ground
212	AC23	VDDC	-	Power supply +1.5 V
213	AD24	DMAL1	O	Address bus (DIMM, SDRAM)
214	AE25	DCSL2	O	
215	AF26	DRAS0	O	
216	AC22	DCAS0	O	
217	AB21	VDDS	-	Power supply +3 V
218	AD23	DCLKIN	I	
219	AE24	DQML2	O	MASK signal
220	AF25	DCSL3	O	
221	AF24	DQML0	O	MASK signal
222	AC21	VDDS	-	Power supply +3 V
223	AB20	VSS	-	Ground
224	AD22	DWEN0	O	
225	AE23	DCLK0	O	
226	AF23	DCLK1	O	
227	AC20	DCLKE	O	
228	AD21	HMD13	I/O	Wave memory data bus (Upper data memory)
229	AB19	VSS	-	Ground
230	AC19	VDDS	-	Power supply +3 V
231	AE22	HMD15	I/O	Wave memory data bus (Upper data memory)
232	AF22	HMD14	I/O	
233	AD20	HMD10	I/O	
234	AE21	HMD12	I/O	
235	AB18	VDDC	-	Power supply +1.5 V
236	AC18	VDDS	-	Power supply +3 V
237	AD19	HMD7	I/O	Wave memory data bus (Upper data memory)
238	AF21	HMD11	I/O	
239	AE20	HMD9	I/O	
240	AF20	HMD8	I/O	
241	AB17	VSS2	-	Ground
242	AC17	VDDC	-	Power supply +1.5 V
243	AD18	HMD4	I/O	Wave memory data bus (Upper data memory)
244	AE19	HMD6	I/O	
245	AF19	HMD5	I/O	
246	AE18	HMD3	I/O	
247	AB16	VSS	-	Ground
248	AC16	VSS2	-	Ground
249	AD17	HMD1	I/O	Wave memory data bus (Upper data memory)
250	AF18	HMD2	I/O	
251	AE17	HMD0	I/O	
252	AF17	DCSH0	O	
253	AB15	VSS	-	Ground
254	AC15	VDDS	-	Power supply +3 V
255	AD16	DCSH1	O	
256	AE16	DQMH3	O	MASK signal
257	AF16	DQMH1	O	
258	AD15	DMAH14	O	Address bus (DIMM, SDRAM)
259	AE15	DMAH13	O	
260	AB14	VSS	-	Ground
261	AC14	VSS2	-	Ground
262	AD14	DMAH11	O	Address bus (DIMM, SDRAM)
263	AF15	DMAH12	O	
264	AE14	DMAH10	O	
265	AF14	DMAH9	O	
266	AF13	DMAH8	O	
267	AB13	VDDS	-	Power supply +3 V
268	AC13	VDDS	-	Power supply +3 V
269	AD13	DMAH6	O	Address bus (DIMM, SDRAM)
270	AE13	DMAH7	O	
271	AE12	DMAH4	O	
272	AD12	DMAH3	O	
273	AC12	VDDS	-	Power supply +1.5 V
274	AB12	VSS	-	Ground
275	AF12	DMAH5	O	Address bus (DIMM, SDRAM)
276	AF11	DMAH2	O	
277	AE11	DMAH1	O	
278	AD11	DMAH0	O	
279	AC11	VSS	-	Ground
280	AB11	VSS	-	Ground
281	AF10	DRAS1	O	
282	AE10	DCSH2	O	
283	AF9	DQMH2	O	MASK signal
284	AD10	DCSH3	O	
285	AC10	VDDC	-	Power supply +1.5 V
286	AB10	VSS2	-	Ground
287	AE9	DQMH0	O	MASK signal
288	AF8	DWEN1	O	
289	AD9	DCAS1	O	
290	AE8	DCLK2	O	
291	AC9	VDDS	-	Power supply +3 V
292	AB9	VDDC	-	Power supply +1.5 V
293	AD8	DCLK3	O	
294	AF7	MELO0	O	MEL wave data output
295	AE7	MELO1	O	
296	AD7	MELO2	O	
297	AC8	VDDS	-	
298	AB8	VSS	-	Ground
299	AF6	MELO3	O	MEL wave data output
300	AE6	MELO4	O	
301	AF5	MELO5	O	
302	AC7	MELO6	O	
303	AD6	MELO7	O	
304	AB7	WCLK0	O	For DAC LR clock
305	AC6	WCLK1	O	
306	AE5	EIRQ	O	
307	AF4	EICN	O	
308	AD5	ESDA	I/O	
309	AE4	ESCL	I/O	
310	AB6	MELI0	I	MEL wave data input
311	AC5	MELI1	I	
312	AD4	MELI2	I	
303	AF3	MELI3	I	
314	AE3	MELI4	I	
315	AF2	MELI5	I	
316	AB5	VSS2	-	Ground
317	AC4	VDDC	-	Power supply +1.5 V
318	AD3	MELI6	I	MEL wave data input
319	AE2	MELI7	I	
320	AF1	ADLR	O	Power supply +3 V
321	AB4	DITO	O	
322	AA5	VSS	-	Ground
323	AC3	AFRM	I/O	
324	AD2	ACLK	I/O	
325	AE1	ADIR	O	
326	AD1	ADAT0	I/O	Data bus (ABUS)
327	AA4	VDDS	-	Power supply +3 V
328	Y5	ADAT9	I/O	Data bus (ABUS)
329	AB3	ADAT3	I/O	
330	AC2	ADAT1	I/O	
331	AC1	ADAT2	I/O	
332	Y4	ADAT10	I/O	
333	AA3	ADAT6	I/O	
334	W5	VSS	-	Ground
335	W4	VDDS	-	Power supply +3 V
336	AB2	ADAT4	I/O	Data bus (ABUS)
337	AB1	ADAT5	I/O	
338	Y3	ADAT11	I/O	
339	AA2	ADAT7	I/O	
340	V5	ADAT14	I/O	
341	V4	ADAT15	I/O	
342	W3	ADAT13	I/O	
343	AA1	ADAT8	I/O	
344	Y2	ADAT12	I/O	
345	Y1	TDI	I	
346	U5	VSS2	-	Ground
347	U4	VDDC	-	Power supply +1.5 V
348	V3	HRD13	I/O	DRAM data bus
349	W2	HRD15	I/O	
350	W1	HRD14	I/O	
351	V2	HRD12	I/O	
352	T5	HRD7	I/O	
353	T4	HRD6	I/O	
354	U3	HRD10	I/O	
355	V1	HRD11	I/O	
356	U2	HRD9	I/O	
357	U1	HRD8	I/O	
358	R5	VSS	-	Ground
359	R4	VDDS	-	Power supply +3 V
360	T3	HRD5	I/O	DRAM data bus
361	T2	HRD4	I/O	
362	T1	HRD3	I/O	
363	R3	HRD2	I/O	
364	R2	HRD1	I/O	
365	P5	VDDS	-	Power supply +3 V
366	P4	HRD0	I/O	DRAM data bus
367	P3	RWEN	O	DRAM write enable
368	R1	RQML	O	
369	P2	RCAS	O	DRAM column address strobe (RAS signal)
370	P1	RRAS	O	DRAM row address strobe (RAS signal)
371	N1	RA13	O	DRAM address bus
372	N5	VDDS	-	Power supply +3 V
373	N4	VDDS	-	Power supply +3 V
374	N3	RA10	O	DRAM address bus
375	N2	RA12	O	
376	M2	RA1	O	
377	M3	RA2	O	
378	M4	VDDS	-	Power supply +3 V
379	M5	VSS	-	Ground
380	M1	RA0	O	DRAM address bus
381	L1	RA3	O	
382	L2	RA4	O	
383	L3	RA5	O	
384	L4	VSS2	-	Ground
385	L5	VSS	-	Ground
386	K1	RA6	O	DRAM address bus
387	K2	RA7	O	
388	J1	RA9	O	
389	K3	RA8	O	
390	K4	VDDC	-	Power supply +1.5 V
391	K5	VSS2	-	Ground
392	J2	RA11	O	DRAM address bus
393	H1	RCLK	O	
394	J3	RCLKE	O	
395	H2	RCLKIN	I	
396	J4	VDDS	-	Power supply +3 V
397	J5	VDDC	-	Power supply +1.5 V
398	H3	RQMH	O	
399	G1	LRD15	I/O	DRAM data bus (Lower data)
400	G2	LRD14	I/O	
401	G3	LRD13	I/O	
402	H4	VDDS	-	Power supply +3 V
403	H5	VSS	-	Ground
404	F1	LRD12	I/O	DRAM data bus (Lower data)
405	F2	LRD11	I/O	
406	E1	LRD8	I/O	
407	G4	VDDS	-	Ground
408	F3	LRD10	I/O	DRAM data bus (Lower data)
409	G5	VDDS	-	Ground
410	F4	LRD9	I/O	DRAM data bus (Lower data)
411	E2	LRD7	I/O	
412	D1	LRD5	I/O	
413	E3	LRD6	I/O	
414	D2	LRD4	I/O	
415	F5	VSS2	-	Ground
416	E4	VSS	-	Ground
417	D3	LRD3	I/O	DRAM data bus (Lower data)
418	C1	LRD2	I/O	
419	C2	LRD1	I/O	
420	B1	LRD0	I/O	

● **HD6417709SHF200B** (X2687A00) **CPU** (SH3)

DM: IC014

PIN NO.	NAME	I/O	FUNCTION	PIN NO.	NAME	I/O	FUNCTION
1	MD1	I	Mode control	105	CKE/PTK5	I/O	CK enable / Port K
2	MD2	I		106	RAS3L/PTJ0	I/O	RAS address bus / Port J
3	Vcc(RTC)	-	Power supply +1.8 V	107	PTJ1	I/O	Port J
4	XTAL2	O	Crystal oscillator	108	CASL/PTJ2	I/O	CAS address bus / Port J
5	EXTAL2	I		109	VssQ	-	Ground
6	Vss(RTC)	-	Ground	110	CASU/PTJ3	I/O	CAS address bus / Port J
7	NMI	I	Non-maskable interrupt request	111	VccQ	-	Power supply +3.3 V
8	IRQ0/IRL0/PTH0	I	Interrupt request / Port H	112	PTJ4	I/O	Port J
9	IRQ1/IRL1/PTH1	I		113	PTJ5	I/O	
10	IRQ2/IRL2/PTH2	I		114	DACK0/PTD5	I/O	DMA acknowledge / Port D
11	IRQ3/IRL3/PTH3	I		115	DACK1/PTD7	I/O	
12	IRQ4/PTH4	I		116	PTE6	I/O	Port E
13	D31/PTB7	I/O	Data bus / Port B	117	PTE3	I/O	
14	D30/PTB6	I/O		118	RAS3U/PTE2	I/O	RAS address bus / Port E
15	D29/PTB5	I/O		119	PTE1	I/O	Port E
16	D28/PTB4	I/O		120	TDO/PTE0	I/O	Test data / Port E
17	D27/PTB3	I/O		121	BACK	O	Bus acknowledge
18	D26/PTB2	I/O		122	BREQ	I	Bus request
19	VssQ	-	Ground	123	WAIT	I	Hardware wait request
20	D25/PTB1	I/O	Data bus / Port B	124	RESETM	I	Manual reset
21	VccQ	-	Power supply +3.3 V	125	ADTRG/PTH5	I	Analog trigger / Port H
22	D24/PTB0	I/O	Data bus / Port B	126	IOIS16/PTG7	I	Write protect / Port G
23	D23/PTA7	I/O	Data bus / Port A	127	ASEMD0/PTG6	I	ASE mode / Port G
24	D22/PTA6	I/O		128	ASEBRKAK/PTG5	I/O	ASE break acknowledge / Port G
25	D21/PTA5	I/O		129	PTG4/CKIO2	I/O	Port G / Clock output
26	D20/PTA4	I/O		130	AUDATA3/PTG3	I/O	AUD data / Port G
27	Vss	-	Ground	131	AUDATA2/PTG2	I/O	
28	D19/PTA3	I/O	Data bus / Port A	132	Vss	-	Ground
29	Vcc	-	Power supply +1.8 V	133	AUDATA1/PTG1	I/O	AUD data / Port G
30	D18/PTA2	I/O	Data bus / Port A	134	Vcc	-	Power supply +1.8 V
31	D17/PTA1	I/O		135	AUDATA0/PTG0	I/O	AUD data / Port G
32	D16/PTA0	I/O		136	TRST/PTF7/PINT15	I	Test reset / Port F / Port interruption
33	VssQ	-	Ground	137	TMS/PTF6/PINT14	I	Test mode switch / Port F / Port interruption
34	D15	I/O	Data bus	138	TDI/PTF5/PINT13	I	Test data / Port F / Port interruption
35	VccQ	-	Power supply +3.3 V	139	TCK/PTF4/PINT12	I	Test clock / Port F / Port interruption
36	D14	I/O	Data bus	140	IRLS3/PTF3/PINT11	I	Interrupt request / Port F / Port interruption
37	D13	I/O		141	IRL2/PTF2/PINT10	I	
38	D12	I/O		142	IRLS1/PTF1/PINT9	I	
39	D11	I/O		143	IRLS0/PTF0/PINT8	I	
40	D10	I/O		144	MD0	I	Mode control
41	D9	I/O		145	Vcc(PLL1)	-	Power supply +1.8 V
42	D8	I/O		146	CAP1	-	Capacitor
43	D7	I/O		147	Vss(PLL1)	-	Ground
44	D6	I/O		148	Vss(PLL2)	-	Ground
45	VssQ	-	Ground	149	CAP2	-	Capacitor
46	D5	I/O	Data bus	150	VCC(PLL2)	-	Power supply +1.8 V
47	VccQ	-	Power supply +3.3 V	151	AUDCK/PTH6	I	AUD clock / Port H
48	D4	I/O	Data bus	152	Vss	-	Ground
49	D3	I/O		153	Vss	-	
50	D2	I/O		154	Vcc	-	Power supply +1.8 V
51	D1	I/O		155	XTAL1	O	Crystal oscillator
52	D0	I/O		156	EXTAL1	I	
53	A0	O	Address bus	157	STATUS0/PTJ6	I/O	Processor status / Port J
54	A1	O		158	STATUS1/PTJ7	I/O	
55	A2	O		159	TCLK/PTH7	I/O	Timer clock / Port H
56	A3	O		160	/IRQOUT	O	Interrupt request output
57	VssQ	-	Ground	161	VssQ	-	Ground
58	A4	O	Address bus	162	CKIO	I/O	System clock input / output
59	VccQ	-	Power supply +3.3 V	163	VccQ	-	Power supply +3.3 V
60	A5	O	Address bus	164	TXD0/SCPT0	O	Data transmission / SCI port
61	A6	O		165	SCK0/SCPT1	I/O	Serial clock / SCI port
62	A7	O		166	TXD1/SCPT2	O	Data transmission / SCI port
63	A8	O		167	SCK1/SCPT3	I/O	Serial clock / SCI port
64	A9	O		168	TXD2/SCPT4	O	Data transmission / SCI port
65	A10	O		169	SCK2/SCPT5	I/O	Serial clock / SCI port
66	A11	O		170	RTS2/SCPT6	I/O	Transmit request / SCI port
67	A12	O		171	RXD0/SCPT0	I	Data reception / SCI port
68	A13	O		172	RXD1/SCPT2	I	
69	VssQ	-	Ground	173	Vss	-	Ground
70	A14	O	Address bus	174	RXD2/SCPT4	I	Data reception / SCI port
71	VccQ	-	Power supply +3.3 V	175	Vcc	-	Power supply +1.8 V
72	A15	O	Address bus	176	CTS2/IRQ5/SCPT7	I	Transmit clear / Interrupt request / SCI port
73	A16	O		177	MCS7/PTC7/PINT7	I/O	Mask ROM chip select / Port C / Port interruption
74	A17	O		178	MCS6/PTC6/PINT6	I/O	
75	A18	O		179	MCS5/PTC5/PINT5	I/O	
76	A19	O		180	MCS4/PTC4/PINT4	I/O	
77	A20	O		181	VssQ	-	Ground
78	A21	O		182	WAKEUP/PTD3	I/O	Standby mode Interrupt request output / Port D
79	Vss	-	Ground	183	VccQ	-	Power supply +3.3 V
80	A22	O	Address bus	184	RESETOUT/PTD2	I/O	Reset output / Port D
81	Vcc	-	Power supply +1.8 V	185	MCS3/PTC3/PINT3	I/O	Mask ROM chip select / Port C / Port interruption
82	A23	O	Address bus	186	MCS2/PTC2/PINT2	I/O	
83	VssQ	-	Ground	187	MCS1/PTC1/PINT1	I/O	
84	A24	O	Address bus	188	MCS0/PTC0/PINT0	I/O	
85	VccQ	-	Power supply +3.3 V	189	DRAK0/PTD1	I/O	DMA acknowledge / Port D
86	A25	O	Address bus	190	DRAK1/PTD0	I/O	
87	BS/PTK4	I/O	Bus cycle / Port K	191	DREQ0/PTD4	I	DMA request / Port D
88	RD	O	Read strobe	192	DREQ1/PTD6	I	
89	WE0/DQMLL	O	Select signal (D7-D0) / D QM (SDRAM)	193	RESETP	I	Power on reset
90	WE1/DQMLU/WE	O	Select signal (D15-D8) / D QM (SDRAM) / Write enable	194	CA	I	Chip active
91	WE2/DQMUU/ICIORD/PTK6	I/O	Select signal (D23-D16) / D QM (SDRAM) / I/O read / Port K	195	MD3	I	Mode control
92	WE3/DQMUU/ISIOWR/PTK7	I/O	Select signal (D31-D24) / D QM (SDRAM) / I/O write / Port K	196	MD4	I	
93	RD/WR	O	Read / Write	197	MD5	I	
94	AUDSYNC/PTE7	I/O	AUD cycle / Port E	198	AVss	-	Analog ground
95	VssQ	-	Ground	199	AN0/PTL0	I	Analog input / Port L
96	CS0/MCS0	O	Chip select / Mask ROM chip select	200	AN1/PTL1	I	
97	VccQ	-	Power supply +3.3V	201	AN2/PTL2	I	
98	CS2/PTK0	I/O	Chip select / Port K	202	AN3/PTL3	I	
99	CS3/PTK1	I/O		203	AN4/PTL4	I	
100	CS4/PTK2	I/O		204	AN5/PTL5	I	
101	CS5/CE1A/PTK3	I/O	Chip select / Chip enable / Port K	205	AVcc	-	Analog power supply +3.3 V
102	CS6/CE1B	O	Chip select / Chip enable	206	AN6/DA1/PTL6	I/O	Analog input / Analog output / Port L
103	CE2A/PTE4	I/O	Chip enable / Port E	207	AN7/DA0/PTL7	I/O	
104	CE2B/PTE5	I/O		208	AVss	-	Analog ground

● **M66291GP** (X2156A00) **USB Controller**

DM: IC002

PIN NO.	NAME	I/O	FUNCTION	PIN NO.	NAME	I/O	FUNCTION
1	Core Vcc		Core power supply	25	D2	I/O	Data bus
2	GND		Ground	26	D3	I/O	
3	D-	I/O	USB data (-)	27	D4	I/O	
4	D+	I/O	USB data (+)	28	D5	I/O	
5	Vbus	I	V bus input	29	D6	I/O	
6	Tr ON	O	Tr ON output	30	D7	I/O	
7	TEST	I	TEST input	31	D8/P0	I/O	
8	/Dack1	I	DMA reception signal 1	32	D9/P1	I/O	
9	/Dreq1	O	DMA request 1	33	D10/P2	I/O	
10	/TC1	I	TC input	34	D11/P3	I/O	
11	/INT1//SOF	O	Interrupt 1/SOF output	35	IOVcc		I/O power supply
12	IOVcc		I/O power supply	36	GND		Ground
13	Xout	O	Output for oscillation	37	D12/P4	I/O	Data bus
14	Xin	I	Input for oscillation	38	D13/P5	I/O	
15	GND		Ground	39	D14/P6	I/O	
16	Core Vcc		Core power supply	40	D15/A0	I/O	
17	A1	I	Address bus	41	/HWR//BYTE	I	Highlight strobe/bus width select
18	A2	I		42	/INT0	O	Interrupt 0
19	A3	I		43	/RD	I	Read strobe
20	A4	I		44	/LWR	I	Low write strobe
21	A5	I		45	/CS	I	Chip select
22	A6	I		46	/RST	I	Reset signal
23	D0	I/O	Data bus	47	/Dreq0	O	DMA request 0
24	D1	I/O		48	/Dack0	I	DMA reception signal 0

● **AK4393-VF-E2** (XW029A00) **DAC** (Digital to Analog Converter)

DM: IC027

PIN NO.	NAME	I/O	FUNCTION	PIN NO.	NAME	I/O	FUNCTION
1	DVSS	-	Digital ground	15	BVSS	-	Substrate ground
2	DVDD	-	Digital power supply	16	VREFL	I	Low level voltage reference
3	MCLK	I	Master clock	17	VREFH	I	High level voltage reference
4	/PD	I	Power down mode	18	AVDD	-	Analog power supply +5 V
5	BICK	I	Audio serial data clock	19	AVSS	-	Analog ground
6	SDATA	I	Audio serial data input	20	AOUTR-	O	Rch negative analog output
7	LRCK	I	L/R clock	21	AOUTR+	O	Rch positive analog output
8	SMUTE//CS	I	Soft mute	22	AOUTL-	O	Lch negative analog output
9	DFS	I	Double speed sampling mode	23	AOUTL+	O	Lch positive analog output
10	DEM0/CCLK	I	De-emphasis enable	24	VCOM	O	Common voltage output
11	DEM1/CDTI	I		25	P//S	I	Parallel/serial select
12	DIF0	I	Digital input format	26	CKS0	I	Master clock select
13	DIF1	I		27	CKS1	I	
14	DIF2	I		28	CKS2	I	

● **PCM1730E-1/2K** (X2077A00) **DAC** (Digital to Analog Converter)

DM: IC029

PIN NO.	NAME	I/O	FUNCTION	PIN NO.	NAME	I/O	FUNCTION
1	/RST	I	Reset	15	MUTE	I	Analog output mute control
2	ZEROL	O	Zero flag for L-channel	16	IOUTR-	O	R-channel analog current output -
3	ZEROR	O	Zero flag for R-channel	17	IOUTR+	O	R-channel analog current output +
4	LRCK	I	Left and right clock	18	AGND1	-	Analog ground
5	DATA	I	Serial audio data input	19	VCOM1	-	Internal bias de-coupling pin
6	BCK	I	Bit clock input	20	VCOM2	-	Common voltage for I/V
7	SCKI	I	System clock input	21	IREF	-	Output current reference bias pin
8	DGND	-	Digital ground	22	VCOM3	-	Internal bias de-coupling pin
9	VDD	-	Digital supply, +3.3V	23	VCC1	-	Analog supply, +5 V
10	DEPMP0	I	De-emphasis control	24	VCC2	-	Analog supply, +5 V
11	DEMP1	I		25	IOUTL+	O	L-channel analog current output +
12	FMT0	I	Audio data format select	26	IOUTL-	O	L-channel analog current output -
13	FMT1	I		27	AGND2	I	Analog ground
14	FMT2	I		28	VCC3	I	Analog power supply, +5 V

● **PCM1800E/2K** (XU770A00) **ADC** (Analog to Digital Converter)

DM: IC028

PIN NO.	NAME	I/O	FUNCTION	PIN NO.	NAME	I/O	FUNCTION
1	VINL	I	Analog input (L ch.)	13	LRCK	I/O	Sampling clock input/output
2	VREF1		Reference 1 decoupling cap.	14	BCK	I/O	Bit clock input/output
3	REFCOM		Reference decoupling common	15	DOUT	O	Audio data output
4	VREF2		Reference 2 decoupling cap.	16	SYSCK	I	System clock input
5	VINR	I	Analog input (R ch.)	17	DGND		Digital ground
6	RSTB	I	Reset input active "L"	18	Vdd		Power supply +5V
7	BYPAS	I	LCF bypass control	19	CINNR		Anti-aliasing filter cap. (-) R ch.
8	FMT0	I	Audio data format 0	20	CINPR		Anti-aliasing filter cap. (+) R ch.
9	FMT1	I	Audio data format 1	21	CINNL		Anti-aliasing filter cap. (-) L ch.
10	MODE0	I	Master/Slave mode selection 0	22	CINPL		Anti-aliasing filter cap. (+) L ch.
11	MODE1	I	Master/Slave mode selection 1	23	Vcc		Analog power supply
12	FSYNC	I/O	Frame sync. input/output	24	AGND		Anaiog ground

● μ**PD780031AYGK-N01-9ET** (XZ916100) **LED DRIVER/SWITCH SCAN E-PNS2a**

PNL: IC010

PIN NO.	NAME	I/O	FUNCTION	PIN NO.	NAME	I/O	FUNCTION
1	P50/A8	I/O	Port 5 / Higher address bus	33	P10/ANI0	I	Port 1 / A/D converter analog input
2	P51/A9	I/O		34	AV_{REF}	I	A/D converter reference voltage input
3	P51/A10	I/O		35	AV_{DD}	-	Analog power supply
4	P53/A11	I/O		36	$\overline{RESET}$	I	System reset input
5	P54/A12	I/O		37	XT2	-	Subsystem clock oscillation
6	P55/A13	I/O		38	XT1	I	
7	P56/A14	I/O		39	IC	-	Internally connected
8	P57/A15	I/O		40	X2	-	Main system clock oscillation
9	Vss0	-	Ground	41	X1	I	
10	$V_{DD}0$	-	Power supply	42	Vss1	-	Ground
11	P30	I/O	Port 3	43	P00/INTP0	I/O	Port 0 / External interrupt request input
12	P31	I/O		44	P01/INTP1	I/O	
13	P32/SDA0	I/O	Port 3 / Serial data input/output	45	P02/INTP2	I/O	
14	P33/SCL0	I/O	Port 3 / Serial clock input/output	46	P03/INTP3/ADTRG	I/O	Port 0 / External interrupt request input / Trigger signai input
15	P34	I/O	Port 3	47	P70/TI00/TO0	I/O	Port 7 / External count clock input / 16-bit timer/event counter 0 output
16	P35	I/O		48	P71/TI01	I/O	Port 7 / Capture trigger input
17	P36	I/O		49	P72/TI50/TO50	I/O	Port 7 / External count clock input / 8-bit timer/event counter 50 output
18	P20/SI30	I/O	Port 2 / Serial data input	50	P73/TI51/TO51	I/O	Port 7 / External count clock input / 8-bit timer/event counter 51 output
19	P21/SO30	I/O	Port 2 / Serial data output	51	P74/PCL	I/O	Port 7 / Clock output
20	P22/$\overline{SCK30}$	I/O	Port 2 / Serial clock input/output	52	P75/BUZ	I/O	Port 7 / Buzzer output
21	P23RxD0	I/O	Port 2 / Serial data input	53	P64/$\overline{RD}$	I/O	Port 6 / Strobe signal output for reading
22	P24/TxD0	I/O	Port 2 / Serial data output	54	P65/$\overline{WR}$	I/O	Port 6 / Strobe signal output for writing
23	P25/ASCK0	I/O	Port 2 / Serial clock input/output	55	P66/$\overline{WAIT}$	I/O	Port 6 / Wait insertion
24	$V_{DD}1$	-	Power supply	56	P67/ASTB	I/O	Port 6 / Strobe output
25	AVss	-	Ground	57	P40/AD0	I/O	Port 4 / Lower address/data bus
26	P17/ANI7	I	Port 1 / A/D converter analog input	58	P41/AD1	I/O	
27	P16/ANI6	I		59	P42/AD2	I/O	
28	P15/ANI5	I		60	P43/AD3	I/O	
29	P14/ANI4	I		61	P44/AD4	I/O	
30	P13/ANI3	I		62	P45/AD5	I/O	
31	P12/ANI2	I		63	P46/AD6	I/O	
32	P11/ANI1	I		64	A47/AD7	I/O	

● HD64F3694 (X3703A00) LKS

HAMMER SW-L: IC001

PIN NO.	NAME	I/O	FUNCTION	PIN NO.	NAME	I/O	FUNCTION
1	NC	-	Not used	33	NC	-	Not used
2	NC	-		34	NC	-	
3	AVcc	-	Power supply (Analog), +5V	35	NMI	I	Non-maskable interrupt request
4	X2	O	Subsystem clock oscillation	36	BK03	O	Key block
5	X1	I		37	BK04	O	
6	VCL	-	Internal step-down power supply (to capacitor)	38	BK05	O	
7	RES	I	Reset (E-Bus)	39	BK06	O	
8	TEST	I	Test terminal	40	BK07	O	
9	Vss	-	Ground	41	BK08/P85	O	
10	OSC2	O	System clock oscillation (16MHz)	42	BK09	O	
11	OSC1	I		43	BK10	O	
12	Vcc	-	Power supply, +5V	44	SCK3	I	Clock (from Damper CPU)
13	MK35	I	4th make contact	45	RXD	I	Data (from Damper CPU)
14	MK34	I		46	P22	I/O	Acknowledge (to Damper CPU)
15	NC	-	Not used	47	NC	-	Not used
16	NC	-		48	NC	-	
17	NC	-		49	NC	-	
18	NC	-		50	NC	-	
19	MK33	I	4th make contact	51	BK11	O	Key block
20	MK32	I		52	BK12	O	
21	MK31	I		53	BK13	O	
22	MK30	I		54	BK14	O	
23	P10/TMOW	I	Device ID	55	P84/AN4	I	A/D (Reserve)
24	P11	I		56	P85/AN5	I	Device ID
25	P12	O	Damper reset	57	MK45	I	3rd make contact
26	P56/SDA	I/O	DATA (E-Bus)	58	MK44	I	
27	P57/SCL	I/O	CLOCK (E-Bus)	59	MK43	I	
28	BK00	O	Key block	60	MK42	I	
29	BK01	O		61	MK41	I	
30	BK02	O		62	MK40	I	
31	NC	-	Not used	63	NC	-	Not used
32	NC	-		64	NC	-	

● μPD78F9026AGB-8FL (X3704A00) LKS

DAMPER SW-L: IC001

PIN NO.	NAME	I/O	FUNCTION	PIN NO.	NAME	I/O	FUNCTION
1	MK12	I	First make contact (Reserve)	23	BK11	O	Key block
2	MK11	I		24	BK12	O	
3	MK10	I		25	BK13	O	
4	BK00	O	Key block	26	BK14	O	
5	BK01	O		27	TXD	O	Serial data (to Hammer CPU)
6	BK02	O		28	SCK	O	Clock (to Hammer CPU)
7	BK03	O		29	P07	I	to GND
8	BK04	O		30	P06	I	
9	BK05	O		31	MK25	I	Second make contact
10	BK06	O		32	MK24	I	
11	BK07	O		33	MK23	I	
12	NC		Not used	34	MK22	I	
13	Vpp		GND	35	MK21	I	
14	X2		Crystal osc. (5 MHz)	36	MK20	I	
15	X1		Crystal osc. (5 MHz)	37	NC		Not used
16	VSS0		GND	38	VDD1		Power supply, +5V
17	VDD0		Power supply, +5V	39	VSS1		GND
18	RESET	I	Reset (to Hammer CPU)	40	P17	I	to GND
19	BK08	O	Key block	41	P16	I	
20	BK09	O		42	MK15	I	First make contact (Reserve)
21	BK10	O		43	MK14	I	
22	TI0	I	Acknowledge (to Hammer CPU)	44	MK13	I	

■ IC BLOCK DIAGRAM

- **HD74LS09FPEL** (XP642A00)
  Quad 2 Input AND
  DM: IC004

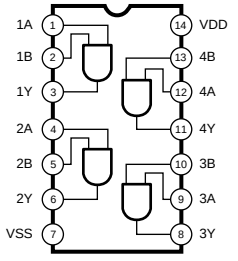

- **TC74VHC14FT** (XV890A00)
  Hex Inverter
  DM: IC006

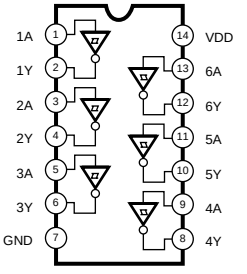

- **TC74VHC32FT** (XY945A00)
  74VHC32MTCX (X0299A00)
  Quad 2 Input OR
  DM: IC007

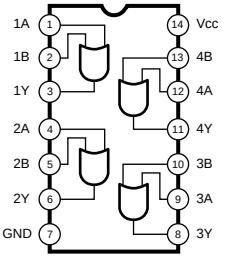

- **HD74LVC245ATELL** (XW148A00)
  74LVC245APW (XZ286A00)
  SN74LVC245APWR (XZ287A00)
  TC74VHCT245AFT (XT744A00)
  74VHCT245AMTCX (X0295A00)
  Octal 3-State Bus Transceiver
  DM: IC005, 009, 010, 011

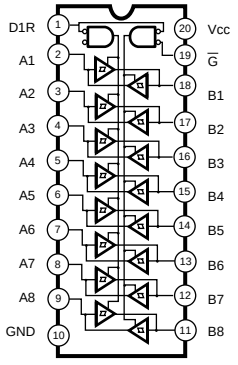

- **SN75C1168NSR** (XU073A00)
  Line Driver / Receiver
  DJK: IC002

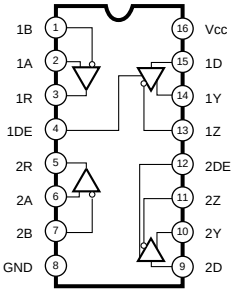

- **SC7SU04FEL** (XI348A00)
  TC7SU04F (XY447A00)
  Inverter Gate
  DJK: IC001

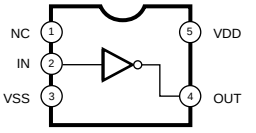

- **M5229FP** (XY487A00)
  7 Band Graphic Equalizer
  AJK: IC300, 400

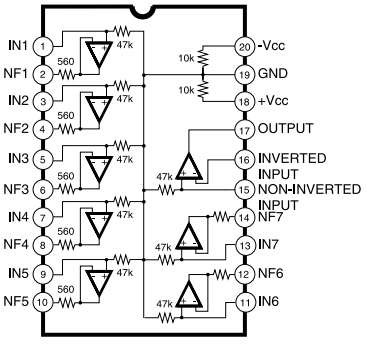

- **LA6517M-TE-R** (XT131A00)
  Dual Power Operational Amplifier
  AJK: IC200

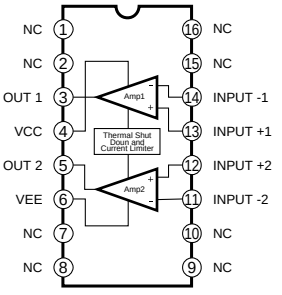

- **μPC4570G2** (XF291A00)
  Dual Operational Amplifier
  DM: IC017, 33-35
  AJK: IC100
  MAF: IC10-13
  PNL: IC073

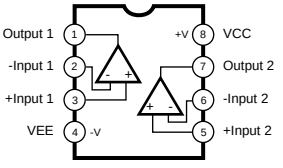

■ CIRCUIT BOARDS

AJK (X2246B0) 32
DJK (X2245C0) 33
DM (XZ592I0) 30/31
FU120BL, FU120B(L) (XS882A0) 39
HP (XQ795A0) 37
MA120B (XZ588D0) 40
MAF (X2247D0) 38
MIC (X2247D0) 38
MV1 (X2244B0) 36
NET1 (XT123B0) 39
NETWORK (XV011A0) 39
PEDAL (X0193A0) 41
PEDAL (DJK) (X2245C0) 33
PNL (X2243D0) 34/35
PNR (X2244B0) 36/37
RELAY (XZ363B0) 41
WMH (X2248A0) 29
WML (X2248A0) 29

Note : See parts list for details of circuit board conponent parts.

- WML Circuit Board
- WMH Circuit Board

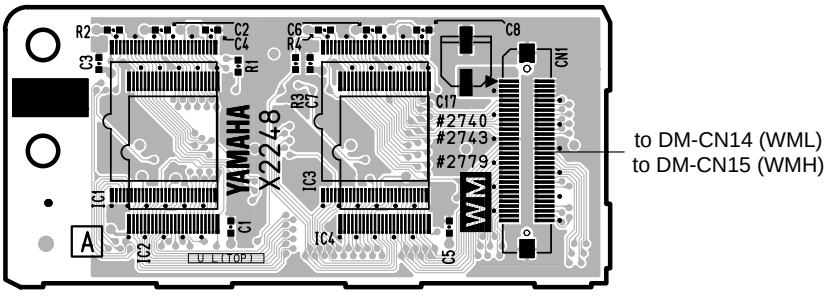

Component side

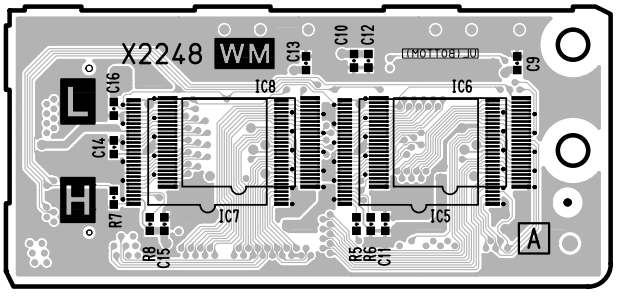

Pattern side

● DM Circuit Board

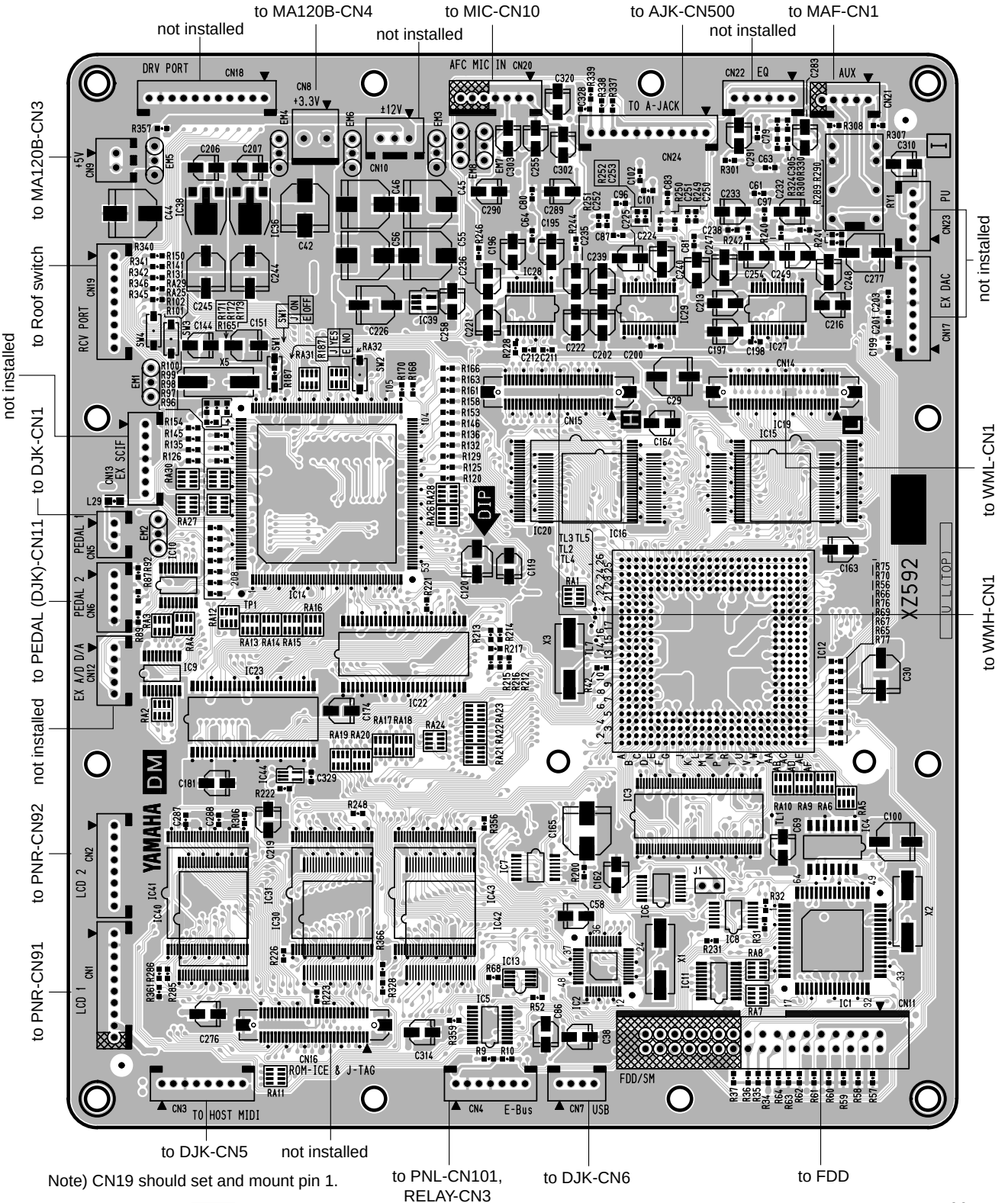

Note) CN19 should set and mount pin 1.

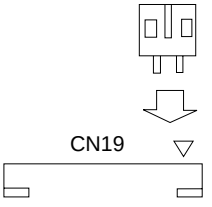

Component side

2NA-V755310 2

● DM Circuit Board

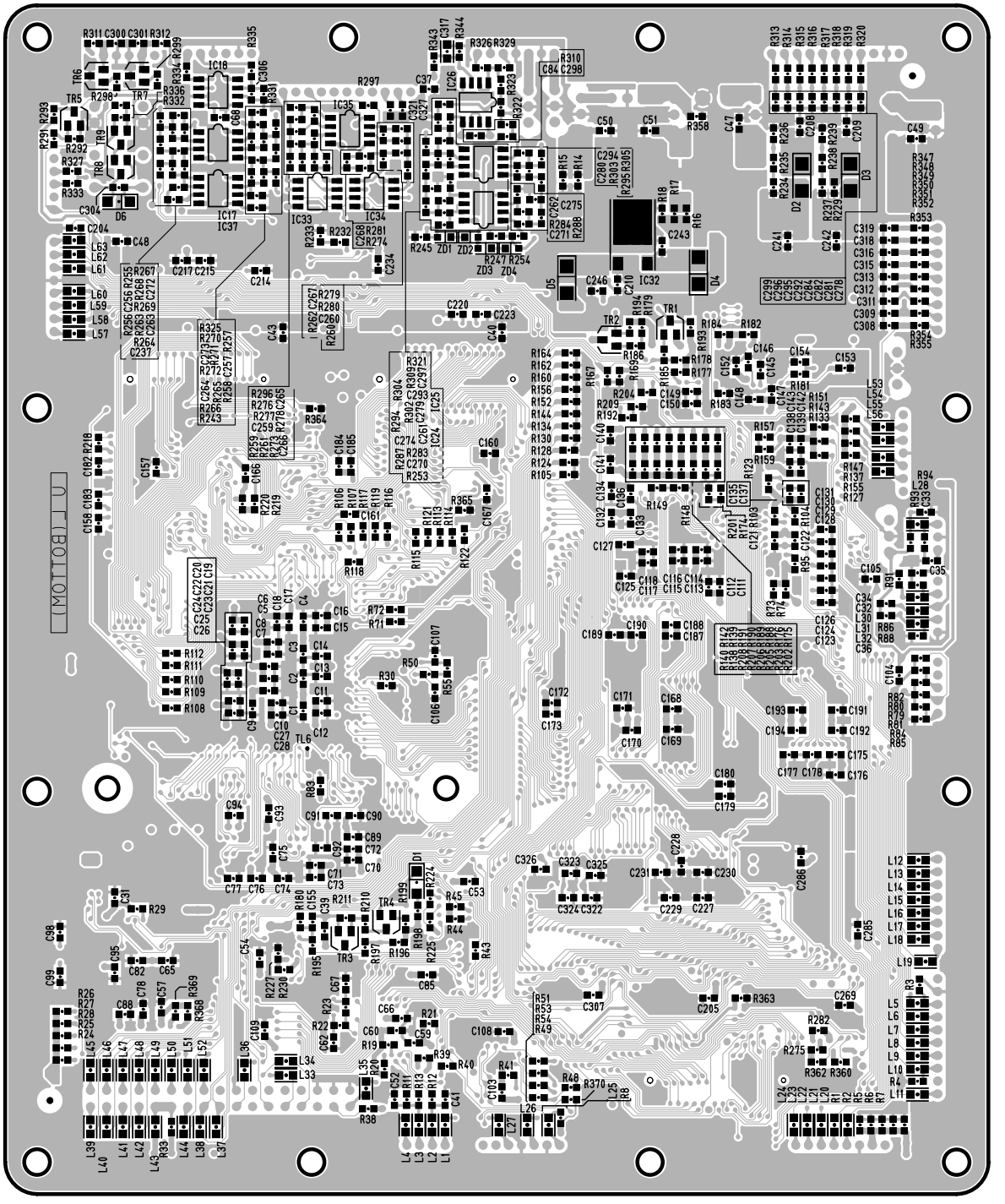

Pattern side

● AJK Circuit Board

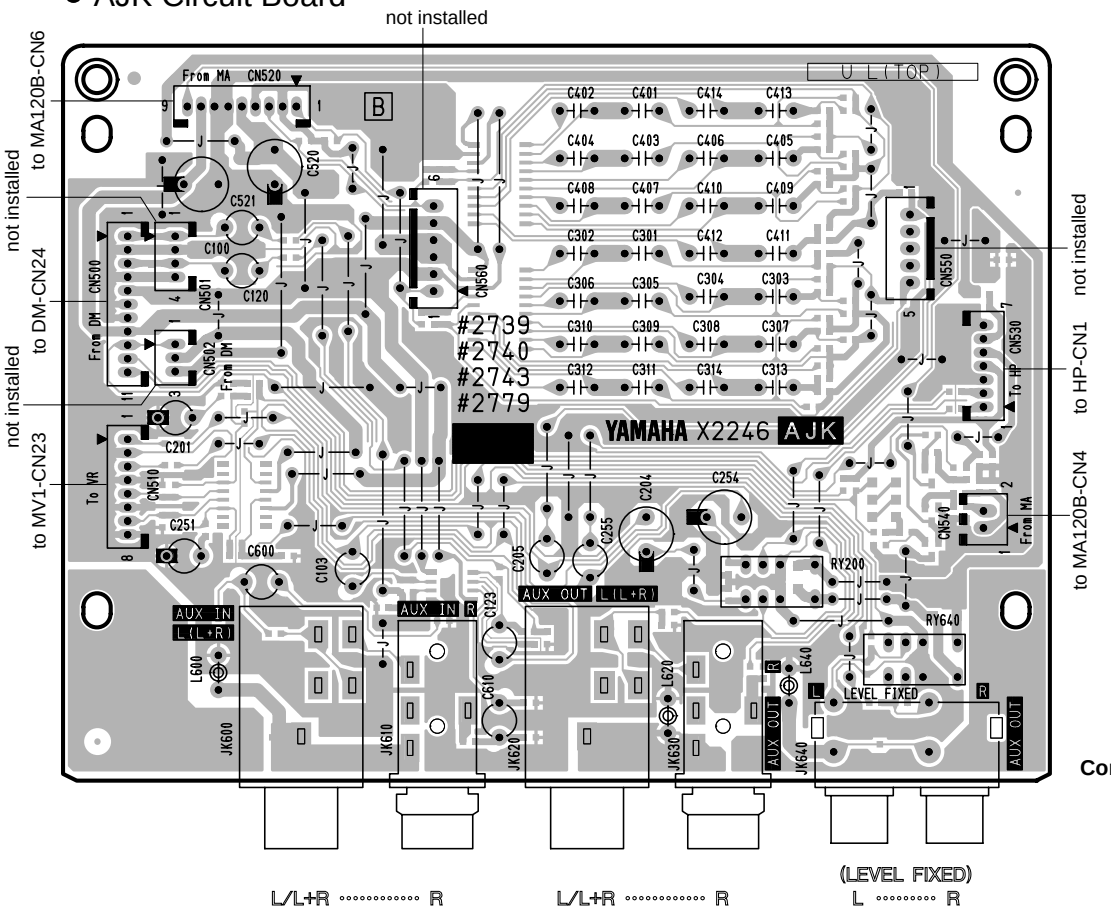

Component side

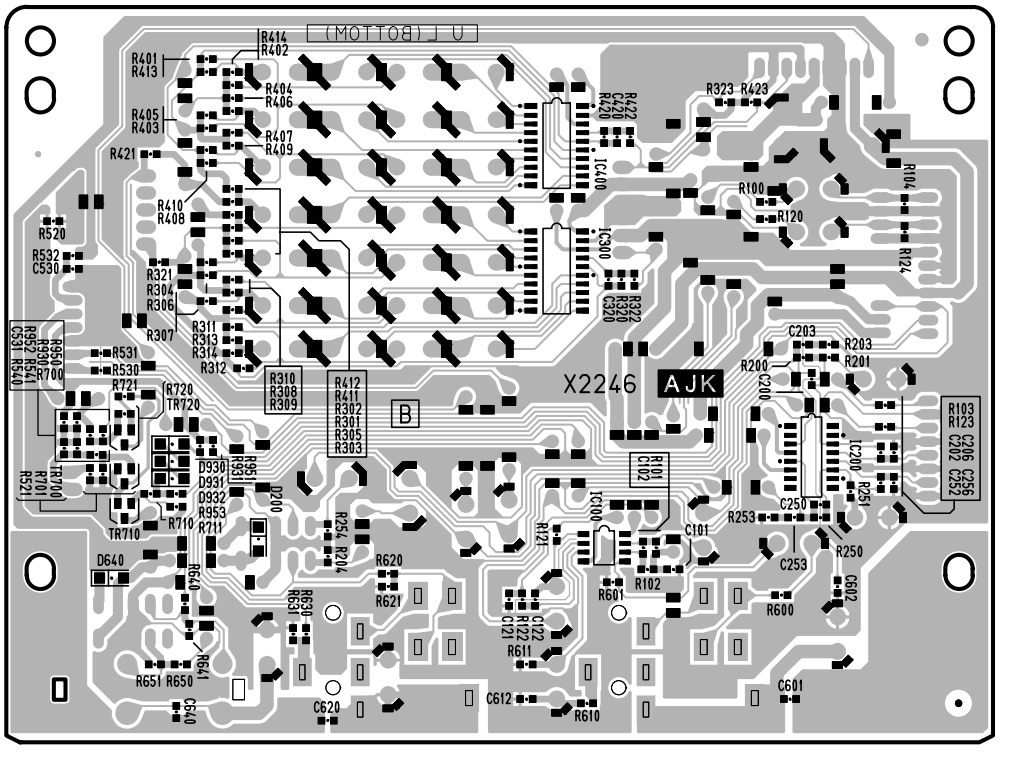

Pattern side

2NA-V849970 2

● DJK Circuit Board

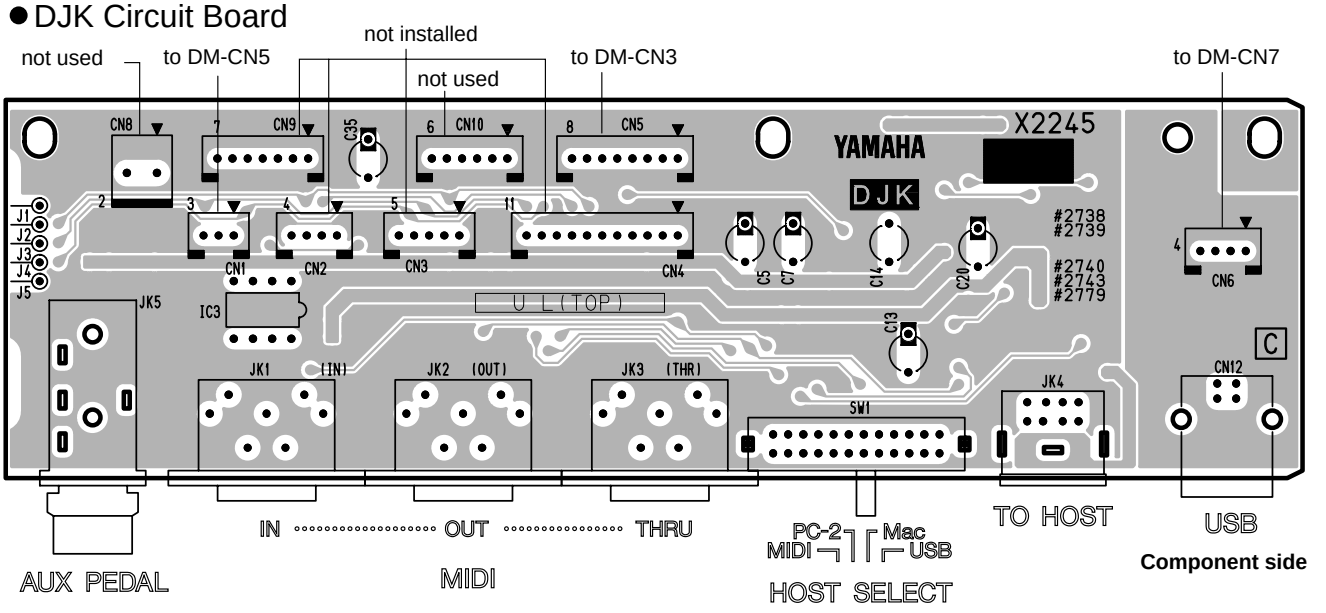

Component side

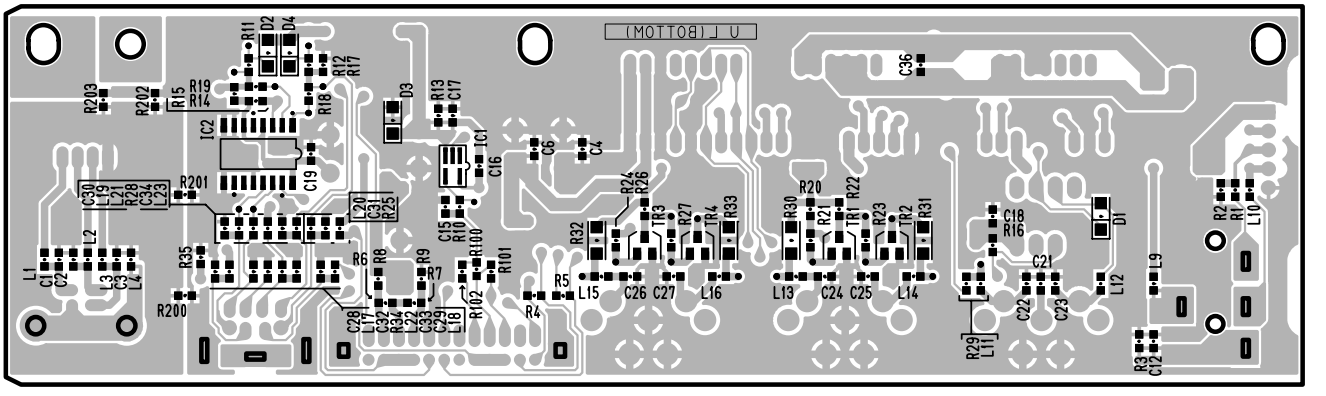

Pattern side

● PEDAL (DJK) Circuit Board

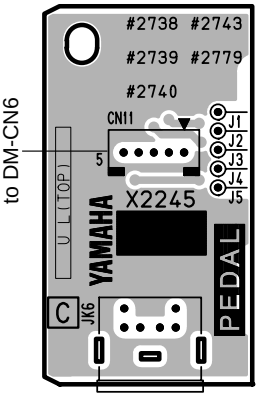

Component side

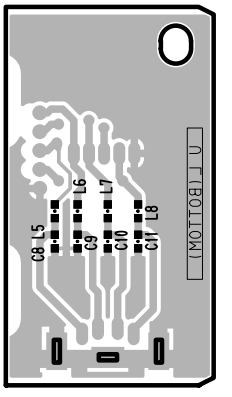

Pattern side

to PEDAL-CN1

DJK: 2NA-V849640 ⚠4

PEDAL (DJK): 2NA-V849640 ⚠4

● PNL Circuit Board

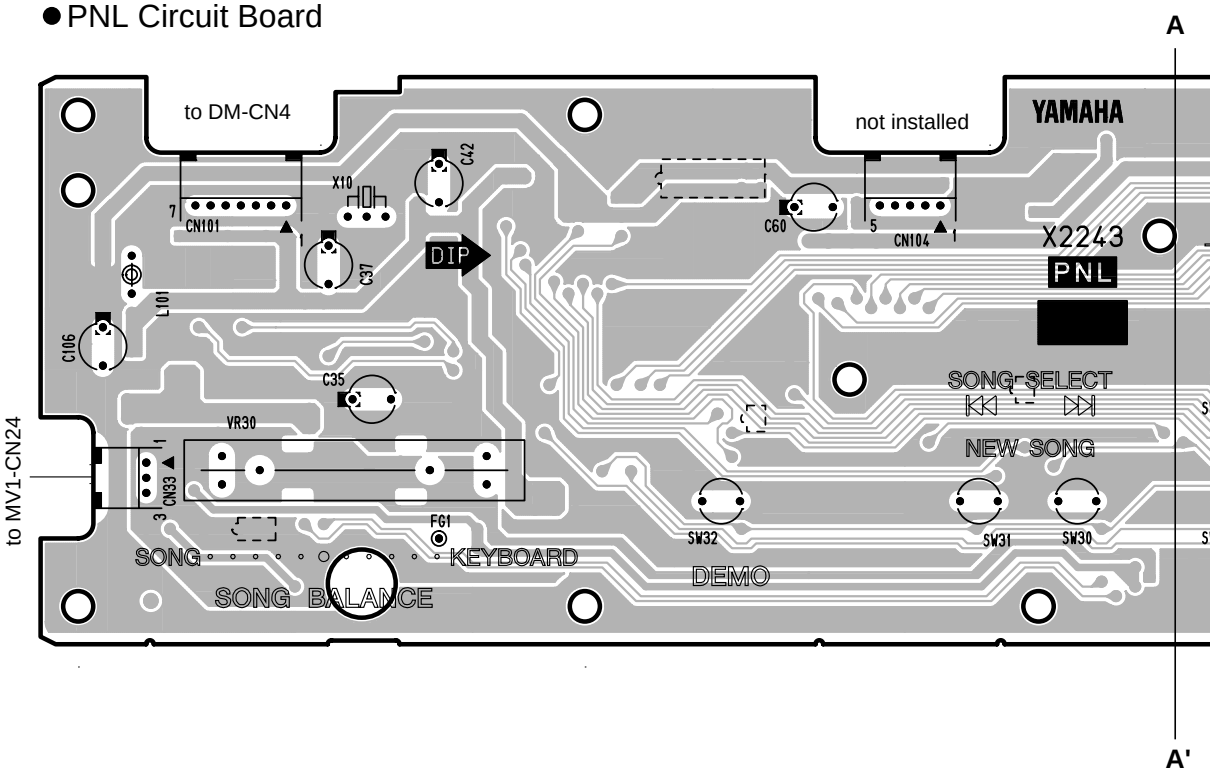

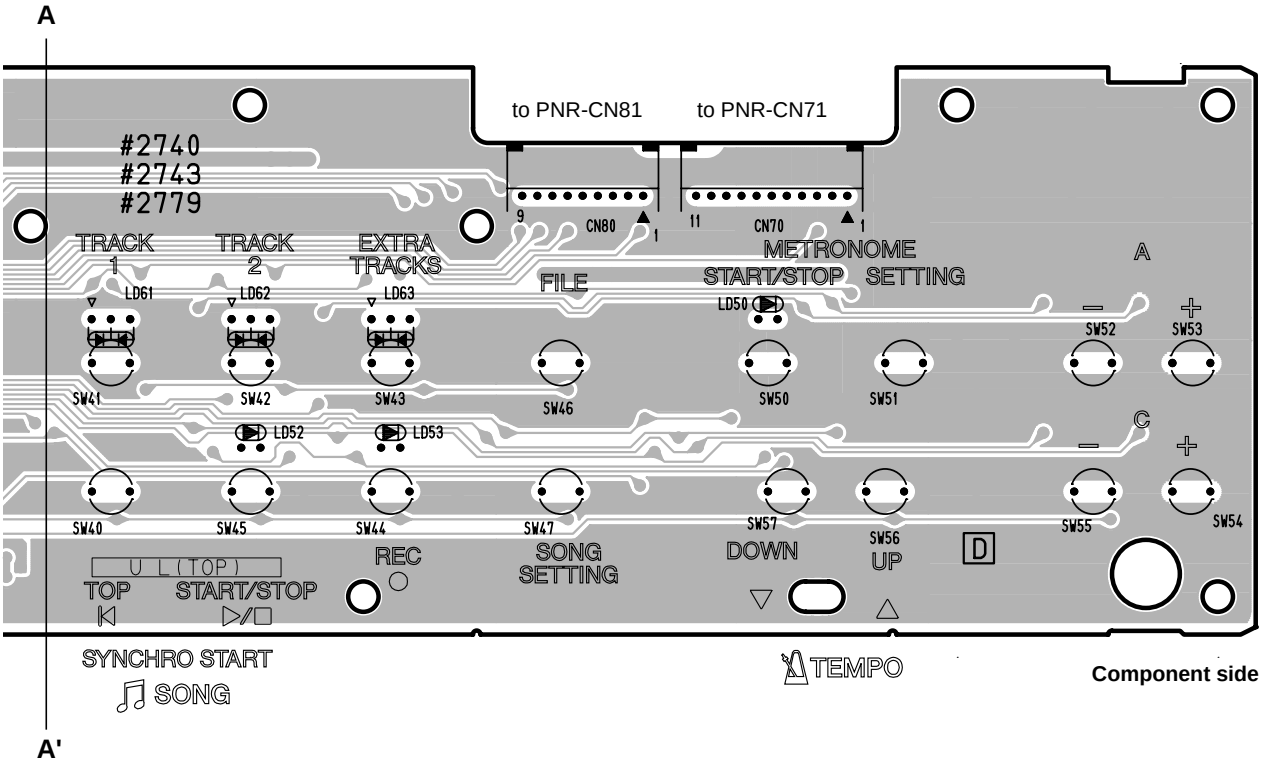

2NA-V845480 1

● PNL Circuit Board

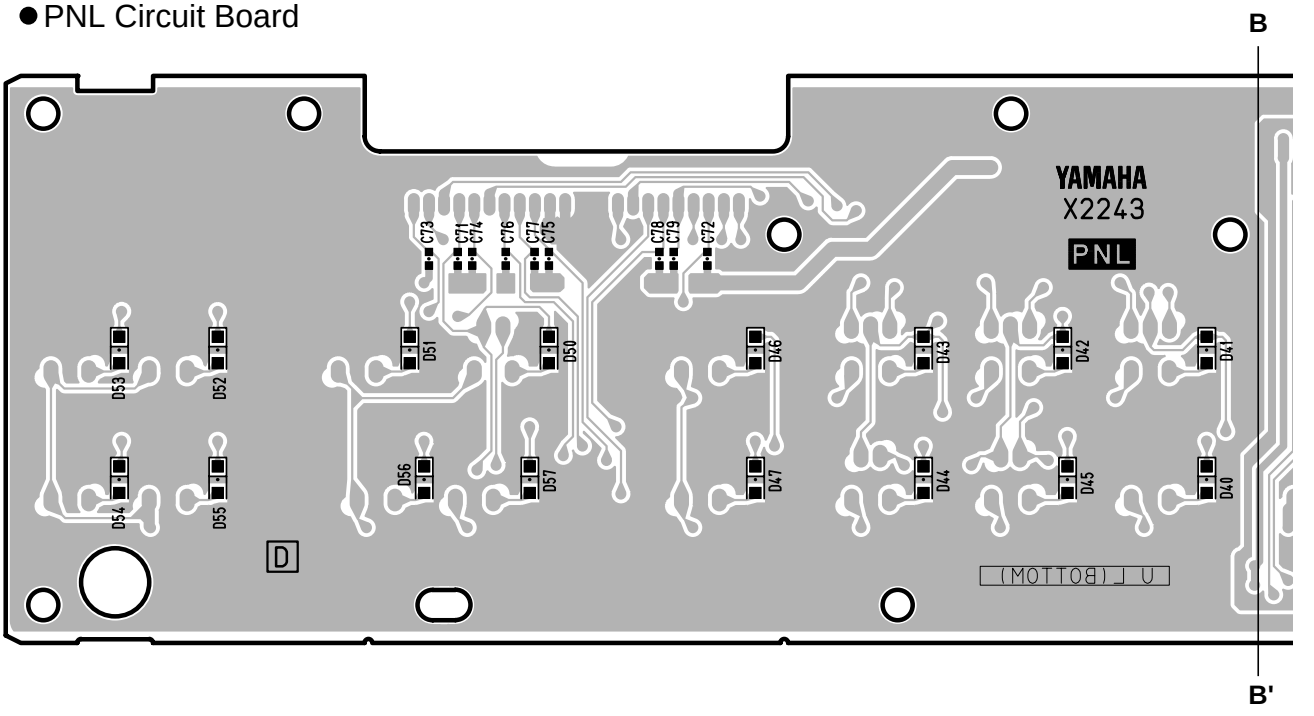

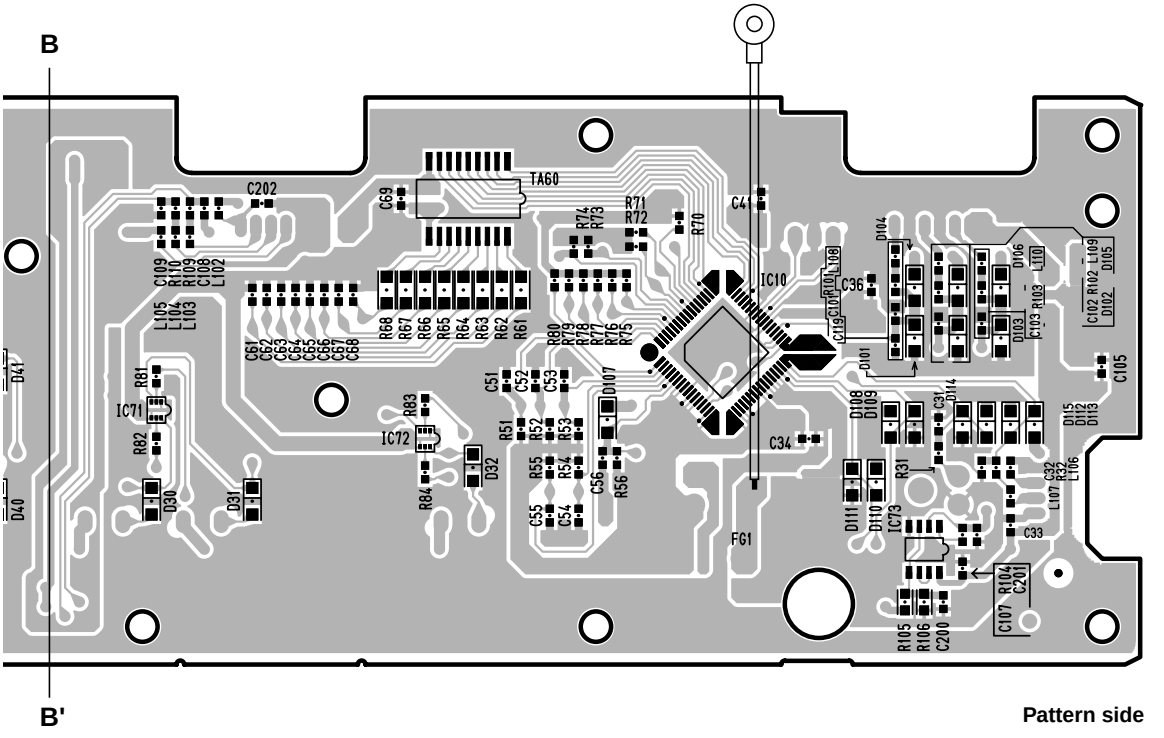

Pattern side

● PNR Circuit Board

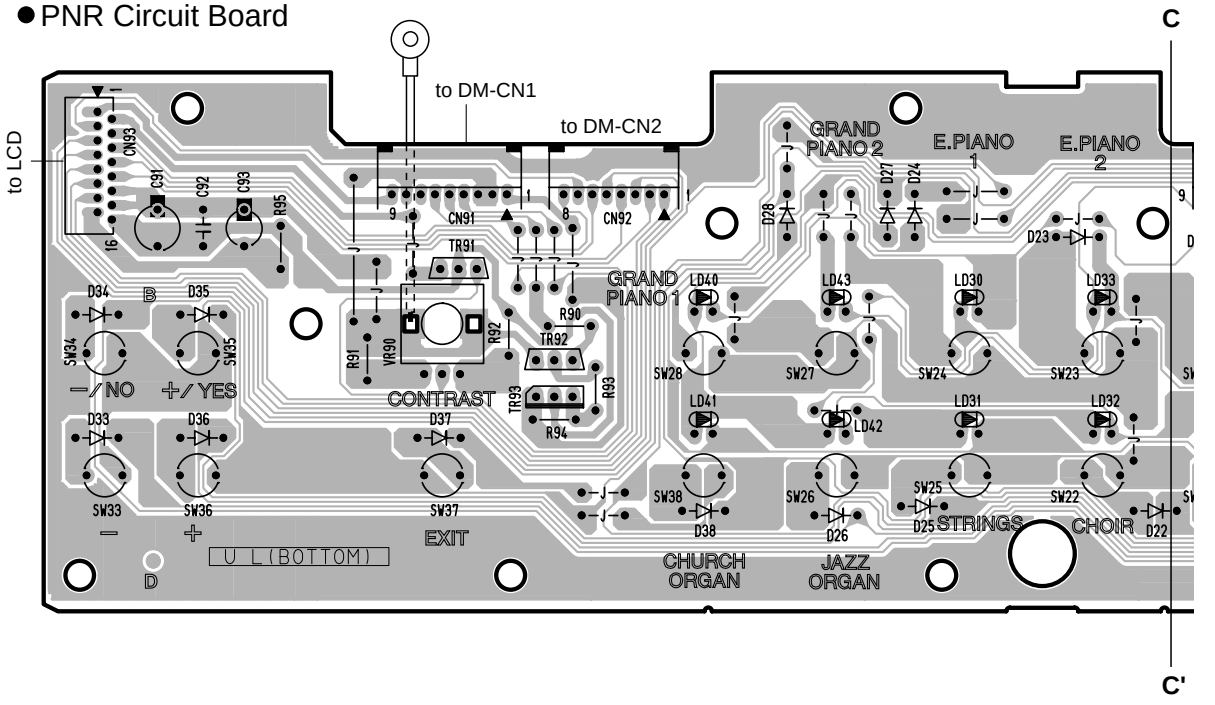

● MV1 Circuit Board

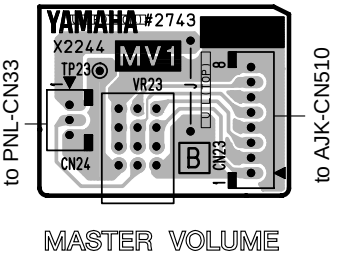

Component side

PNR: 2NA-V845520 △4
MV1: 2NA-V845520 △4

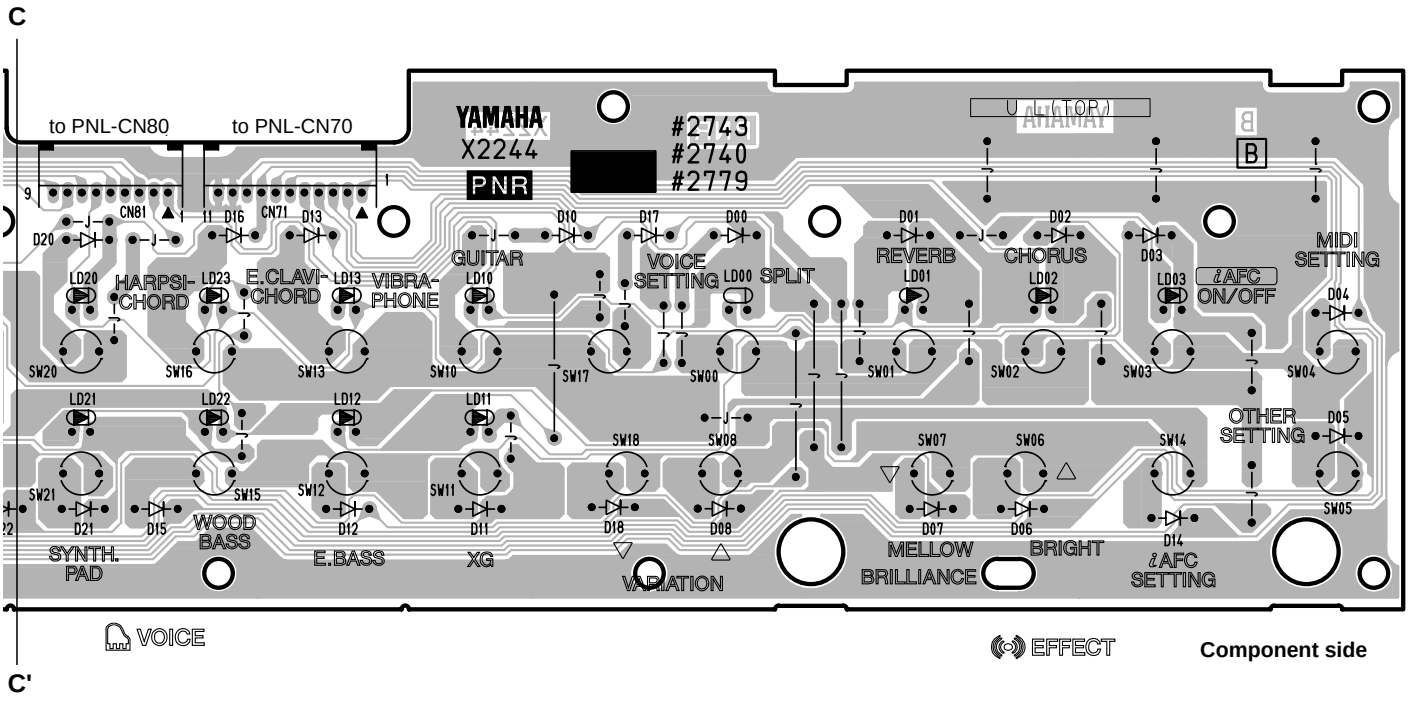

● HP Circuit Board

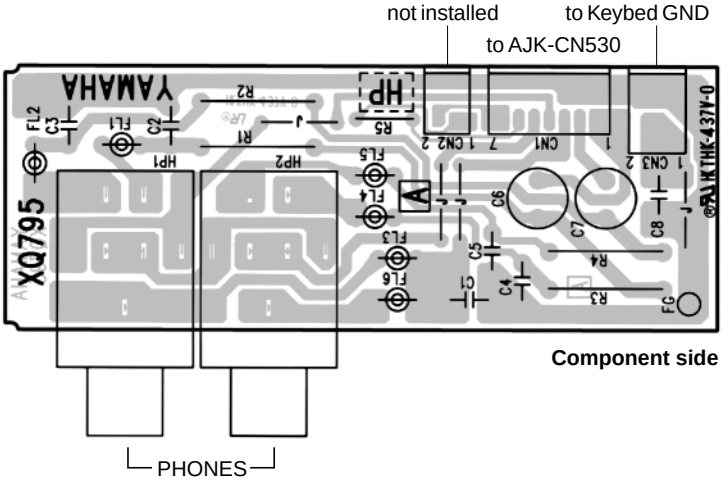

PNR: 2NA-V845520 ⚠4
HP: 2NA-VY66380 ⚠2

● MAF Circuit Board

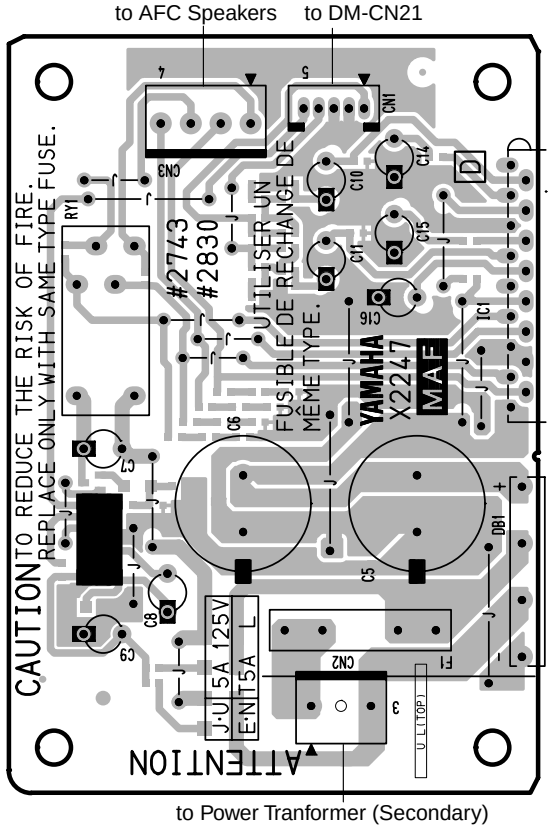

Component side

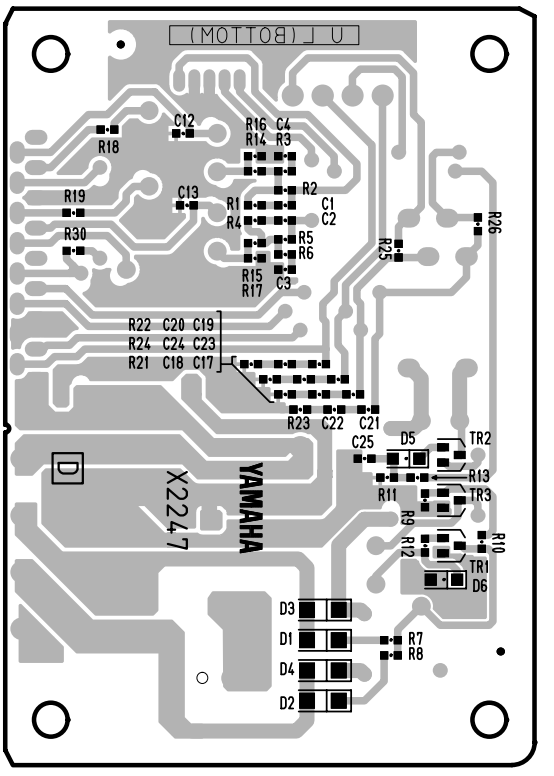

Pattern side

● MIC Circuit Board

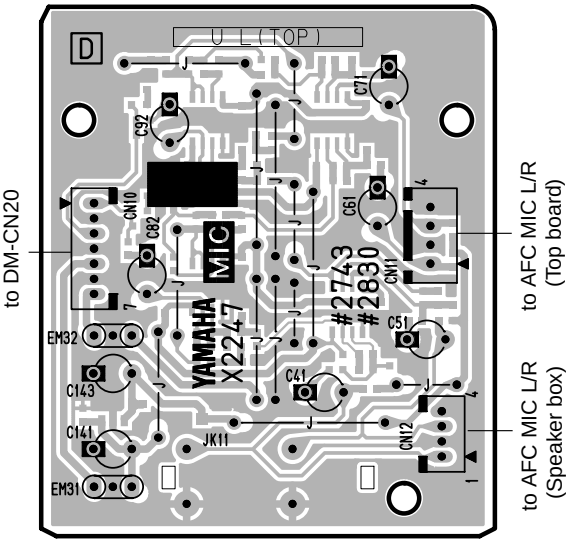

Component side

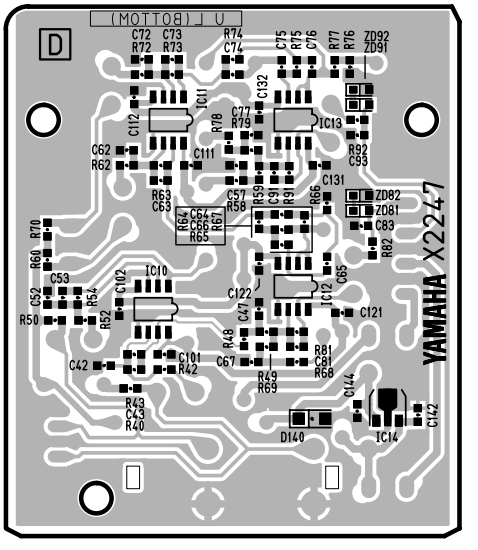

Pattern side

MAF: 2NA-V880430 △3

MIC: 2NA-V880430 △3

● NETWORK Circuit Board

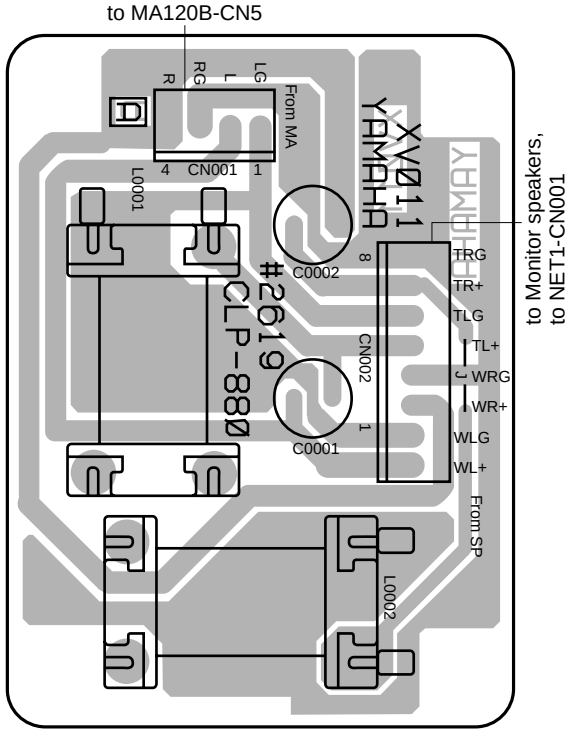

Component side

● NET1 Circuit Board

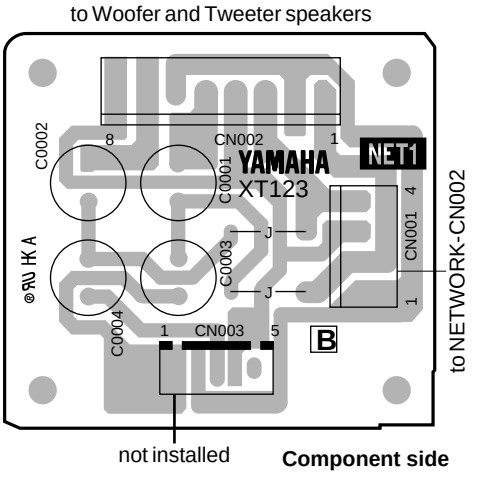

Component side

● FU120BL, FU120B(L) Circuit Board

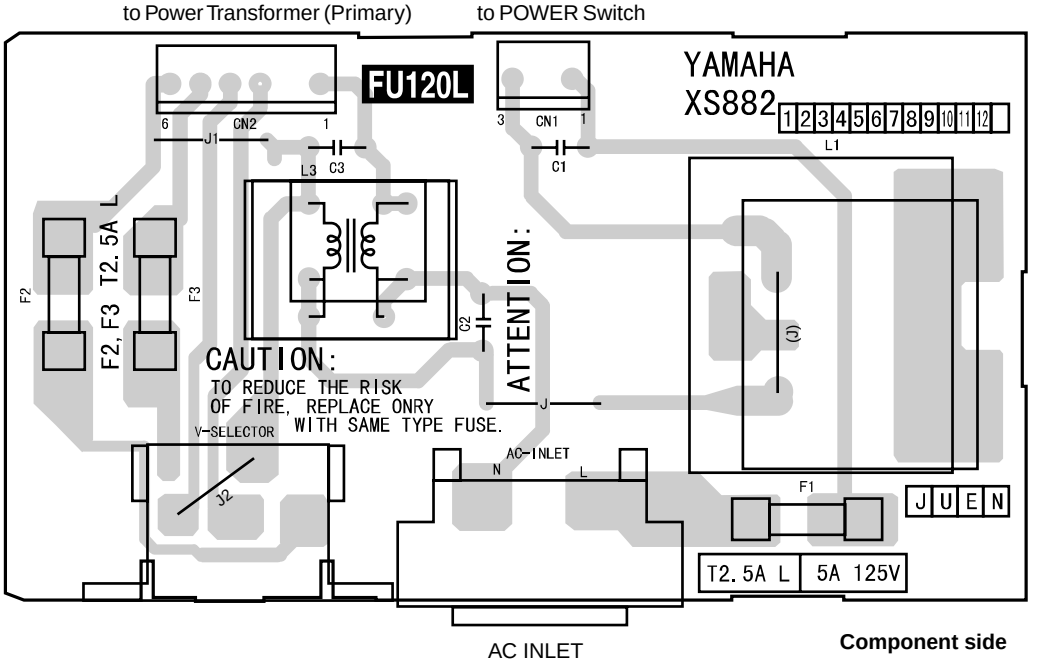

Component side

PARTS SPECIFICATIONS

Parts \ MODEL	US model	European
AC-INLET	Polarized	Non Pola
V-SELECTOR	×	×
J1	×	○
J2	○	×
L1	JW	JW
F1	5A	T2.5A L
F2	×	×
F3	×	×

○: installed ×: not installed
JW: Jumper Wire

FU120BL, FU120B(L): 2NA-V782550 (1)
NETWORK: 2NA-V245500 (1)
NET1: 2NA-VY64290 (1)

● MA120B Circuit Board

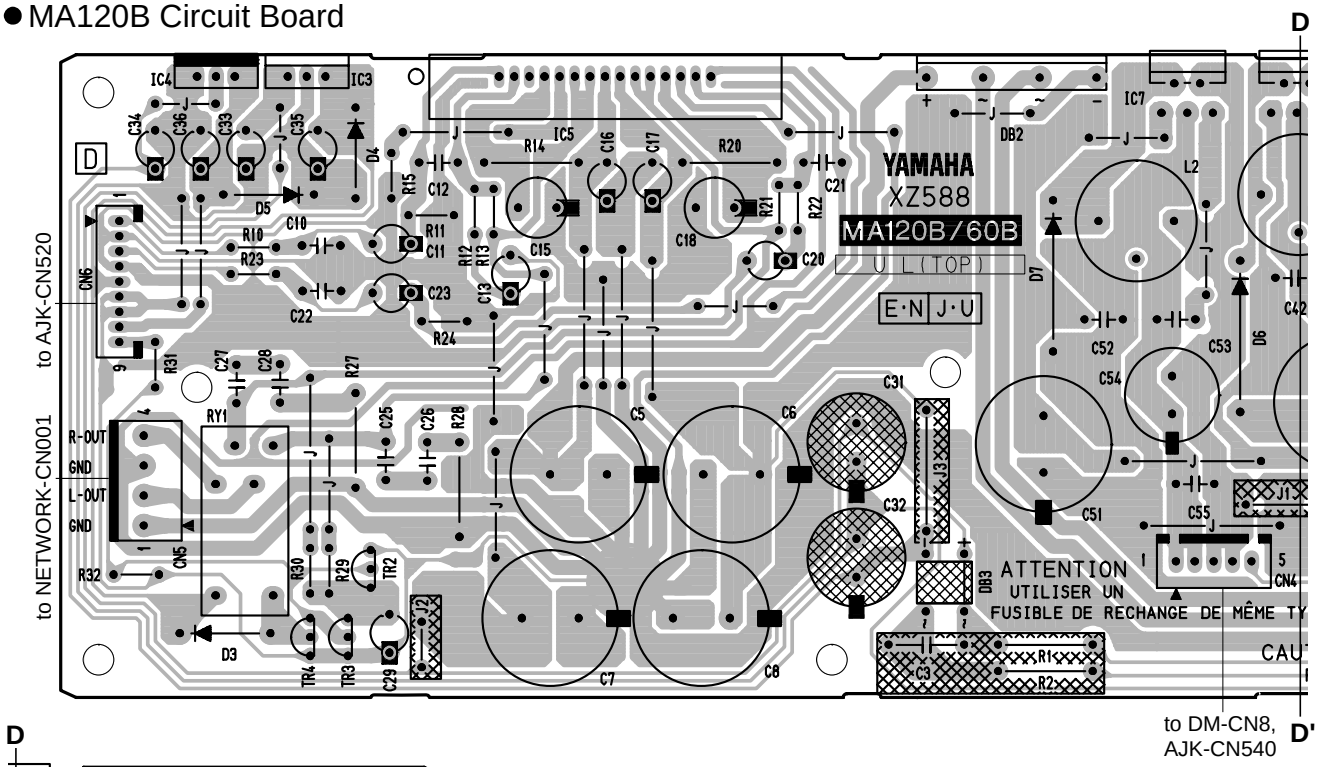

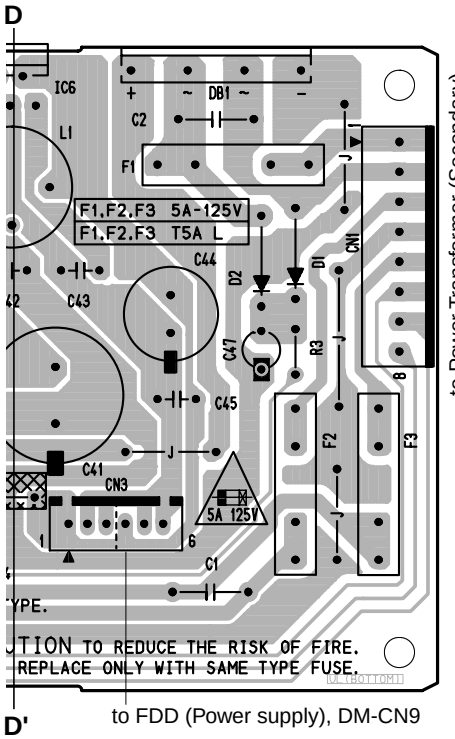

Component side

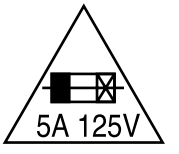

CAUTION: REPLACE WITH SAME TYPE 5A 125V FUSE.

ATTENTION: UTILISER UN FUSIBLE DE RECHANGE DE M ME TYPE DE 5A 125V.

NOTE : The symbol (▬▩▬) shows Slow operating fuse.

2NA-V675390 6

● PEDAL Circuit Board

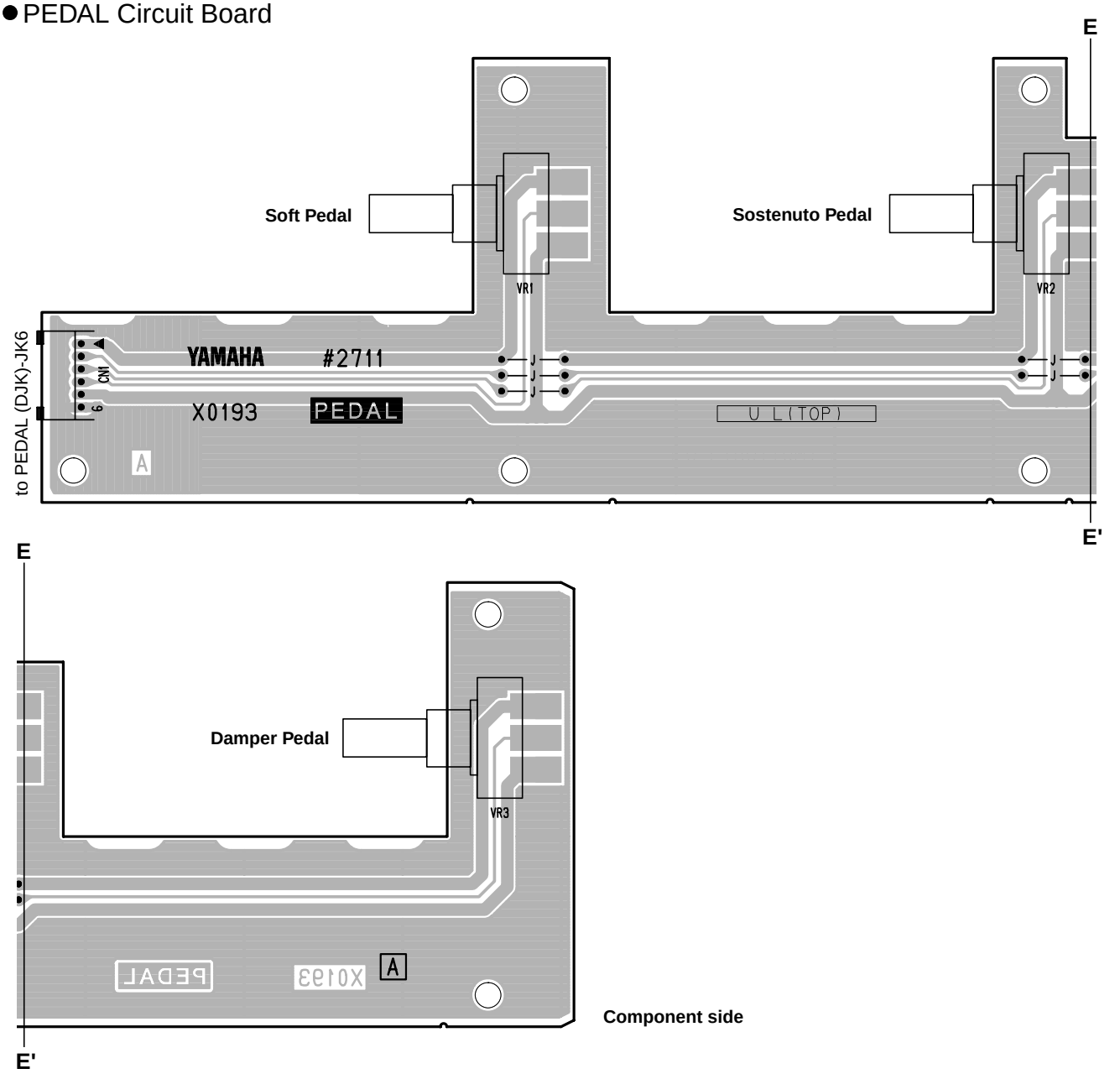

● RELAY Circuit Board

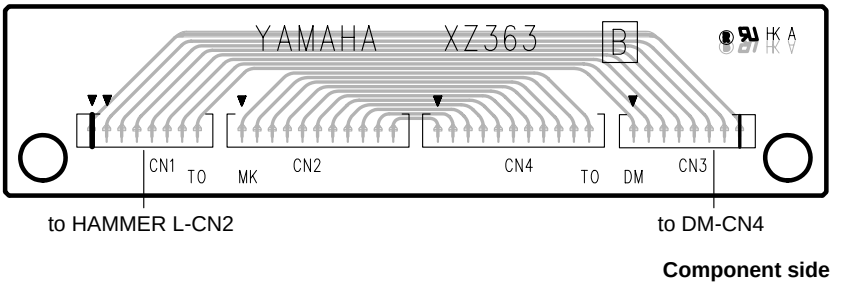

PEDAL: 2NA-V767550

RELAY: 2NAKZ-V643390 △2

■ KEYBOARD ADJUSTMENT

1. Adjustment of flounder

Use the capstan screw for adjustment. (See Fig. 1.)

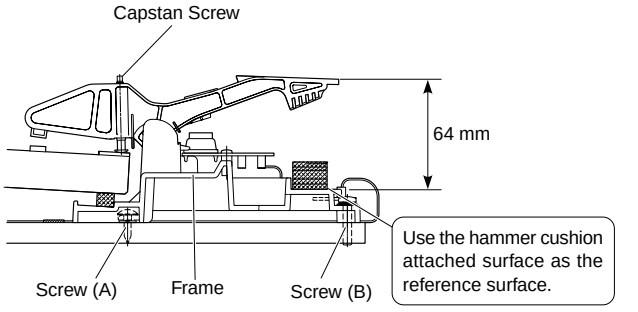

(Fig. 1)

2. Adjustment of key height

[A] To raise the key

Insert a paper punching (t=0.03mm to 0.45mm) under the balance punching cloth (t=1.35mm).

[B] To lower the key

Replace the balance punching cloth with a 1.0mm-thick one.

3. Adjustment of gap between keys

Bend the front pin to adjust the gap.

4. List of countermeasures for individual services

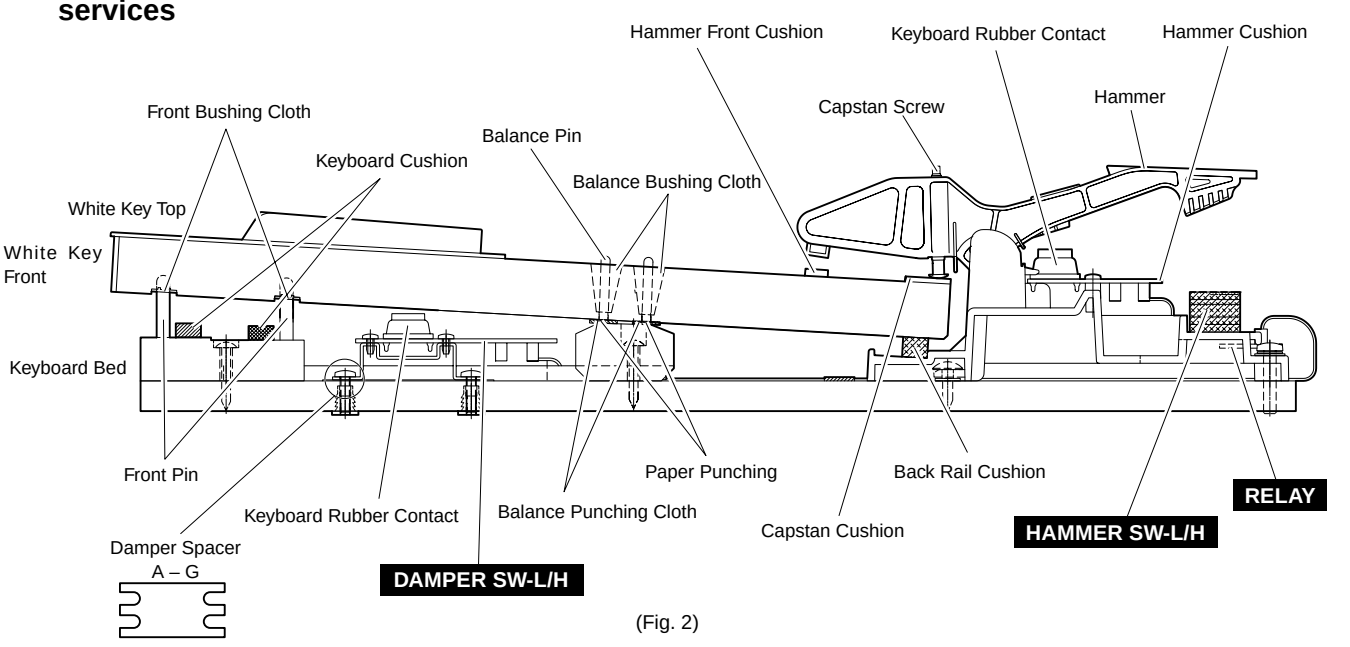

(Fig. 2)

✻ KEYBOARD CANNOT BE MAINTAINED WITH THE PANEL ATTACHED TO IT. IT IS BASICALLY NECESSARY TO REMOVE THE PANEL FIRST.

✻ WHEN REPLACING THE KEY, CHECK EVERYTHING INCLUDING APPEARANCE AND OPERATION.

SYMPTOM	CAUSE	ACTION	PROCEDURE	PART	TOOL	REMARKS
UNEVEN WHITE KEY TOPS.	KEY IS LOOSENED.	PRESS THE KEY.	PRESS THE KEY FROM THE TOP AROUND ITS BALANCE PIN.			PANEL NEEDS NOT BE REMOVED FOR THIS CORRECTION.
	VARIATION IN AGE-BASED CHANGE	ADJUST TOP ALIGNMENT.	**<LOWER THAN SURROUNDING>** ADD PAPER PUNCHING	PAPER PUNCHING	RULER	APPLY A RULER TO THE TOP FACE TO CHECK ALIGNMENT.
			<HIGHER THAN SURROUNDING> AFTER REPLACING THE BALANCE PUNCHING CLOTH WITH A 1.0mm THICK ONE, ADD PAPER PUNCHING AS REQUIRED.	BALANCE PUNCHING CLOTH (V7817600)	RULER	

SYMPTOM	CAUSE	ACTION	PROCEDURE	PART	TOOL	REMARKS
	WARPAGE OF KEY ITSELF	REPLACE THE KEY.	1. REPLACE WITH A NEW KEY.	PAPER PUNCHING	RULER	
			2. PERFORM PRELIMINARY KEY-PRESSING 50 TIMES.			
			3. ADJUST THE CAPTSTAN SCREW TO MAKE THE HAMMER INITIAL POSITION MATCH WITH THE SURROUNDING.		CAPSTAN SCREWDRIVER (AAX24950) OVAL PIN CORRECTER	
			4. ADJUST CLEARANCE WITH ADJACENT KEYS AND INCLINATION PROPERLY. 5. ADJUST TOP ALIGNMENT (WHITE KEYS). * REFER TO "**VARIATION IN TIME-BASED CHANGE**". 6. ADJUST FLOUNDER * REFER TO "**1. ADJUSTMENT OF FLOUNDER**".			
INCORRECT CLEARANCE AT EITHER SIDE OF WHITE KEY	FRONT PIN IS BENT.	ADJUST THE FRONT PIN.	1. REMOVE THE KEY.			
			2. BEND THE FRONT PIN AT ITS ROOT.		OVAL PIN CORRECTER	
	WARPAGE OF KEY ITSELF	REPLACE THE KEY.	* REFER TO "**UNEVEN WHITE KEY TOPS**."	←	←	
INCLINATION OF WHITE KEY	BALANCE PIN IS BENT.	ADJUST THE BALANCE PIN.	BEND THE BALANCE PIN TIP BY PUSHING IT WITH SOMETHING HARD.		SHANK OF SCREWDRIVER OR THE LIKE	
	WARPAGE OF KEY ITSELF.	REPLACE THE KEY.	* REFER TO "**UNEVEN WHITE KEY TOPS**."	←	←	
EXCESSIVE FLOUNDER (DANGLING FEELING)	MALFUNCTION OF CAPSTAN CUSHION.	<AT SMALL DEGREE> ADJUST THE CAPSTAN SCREW.	READJUST THE INVOLVED KEY OR ALL KEYS SO THAT THE HAMMER REAR END IS "64mm" HIGH FROM THE SURFACE WHERE THE HAMMER CUSHION IS ATTACHED.		CAPSTAN SCREWDRIVER (AAX24950)	
		<AT EXCESSIVE DEGREE> REPLACE THE CAPSTAN CUSHION.	1. REMOVE THE KEY. 2. REPLACE THE CAPSTAN CUSHION FOR THE INVOLVED KEY OR ALL KEYS WITH A NEW ONE. 3. PERFORM PRELIMINARY KEY-PRESSING 50 TIMES. 4. READJUST THE INVOLVED KEY OR ALL KEYS SO THAT THE HAMMER REAR END IS "64mm" HIGH FROM THE SURFACE WHERE THE HAMMER CUSHION IS ATTACHED.	CAPSTAN CUSHION		
	MALFUNCTION OF HAMMER CUSHION.	REPLACE THE CUSHION.	1. REMOVE ALL KEYS ONCE. 2. REPLACE THE HAMMER CUSHION WITH A NEW ONE.	HAMMER CUSHION		

SYMPTOM	CAUSE	ACTION	PROCEDURE	PART	TOOL	REMARKS
	MALFUNCTION OF BACK RAIL CUSHION.	REPLACE THE CUSHION.	1. REMOVE ALL KEYS ONCE. 2. FIX THE HAMMER TO THE FRAME WITH A STRING OR REMOVE ALL. (SEE FIG. 3) 3. REPLACE THE BACK RAIL CUSHION WITH A NEW ONE.	BACK RAIL CUSHION STRING		
NOISE PRODUCED WHEN KEY IS PRESSED.	HAMMER SHAFT IS LOOSE.	ADD GREASE.	APPLY GREASE TO THE INSIDE AND BOTH SIDES OF THE HAMMER SHAFT.	GREASE	THIN ROD	GREASE (TX920310)
		REPLACE WITH ANOTHER CABINET HAMMER.	REPLACE THE HAMMER WITH THE ONE OF THE SAME KIND AND DIFFERENT CABINET No. (SEE FIG. 4)			
	FOREIGN MATERIAL IS MIXED.	REMOVE FOREIGN MATERIAL.	CHECK THE KEY AND HAMMER SECTION AND REMOVE FOREIGN MATERIAL, IF ANY.			
	CHARACTERISTIC OF RUBBER CONTACT (HAMMER SIDE ONLY)	REPLACE THE RUBBER CONTACT.	REPLACE THE RUBBER CONTACT WITH A NEW ONE.	RUBBER CONTACT	CLIP PHILLIPS SCREWDRIVER	
	FRAME FIXING SCREW IS LOOSE.	RETIGHTEN THE SCREW.	RETIGHTEN THE SCREW NEAR THE KEY WHICH PRODUCES NOISE.		PHILLIPS SCREWDRIVER	NOTE THAT SCREWS ARE OF 2 TYPES, "A" AND "B" (FRONT, REAR). (FIG. 1)
TOO LITTLE CLEARANCE FOR END BLOCK.	KEYBOARD MISALIGNMENT	ADJUST THE RIGHT AND LEFT POSITIONS OF THE KEYBOARD.	LOOSEN THE SCREWS FOR THE FITTINGS ON THE KEYBOARD PLANE ONCE AND THEN ADJUST THE RIGHT AND LEFT POSITIONS OF THE KEYBOARD.		PHILLIPS SCREWDRIVER	
KEY NOT RETURNING.	STICKING DUE TO WARPAGE OF THE KEY ITSELF	REPLACE THE KEY.	REFER TO "**UNEVEN WHITE KEY TOPS**."	←	←	←
	KEY CONTACTS THE FRONT RAIL	ADJUST THE FRONT AND REAR POSITIONS OF THE KEYBOARD.	LOOSEN THE SCREWS FOR THE FITTINGS ON THE KEYBOARD PLANE ONCE AND THEN ADJUST THE FRONT AND REAR POSITIONS OF THE KEYBOARD.		PHILLIPS SCREWDRIVER	
	KEY CONTACTS THE END BLOCK.	ADJUST THE RIGHT AND LEFT POSITIONS OF THE KEYBOARD.	LOOSEN THE SCREWS FOR THE FITTINGS ON THE KEYBOARD PLANE ONCE AND THEN ADJUST THE RIGHT AND LEFT POSITIONS OF THE KEYBOARD.		PHILLIPS SCREWDRIVER	
	FOREIGN MATERIAL IS MIXED.	REMOVE FOREIGN MATERIAL.	CHECK THE KEY AND HAMMER SECTION AND REMOVE FOREIGN MATERIAL, IF ANY.			
UNSMOOTH KEY MOVEMENT.	FRONT BUSHING CLOTH IS SWOLLEN.	ADJUST THE BUSHING.	1. REMOVE THE KEY. 2. EXPAND BALANCE BUSHING CLOTH WITH KEY SPACER.		KEY SPACER	
	BALANCE BUSHING CLOTH IS SWOLLEN.	ADJUST THE BUSHING.	1. REMOVE THE KEY. 2. EXPAND BALANCE BUSHING CLOTH WITH KEY SPACER.		KEY SPACER	

SYMPTOM	CAUSE	ACTION	PROCEDURE	PART	TOOL	REMARKS
CLICK IMPACT WHEN KEY IS PRESSED.	BALANCE HOLE IS NARROW.	ADJUST THE BALANCE HOLE.	1. REMOVE THE KEY. 2. ADJUST THE HOLE WITH KEY SPACER		KEY SPACER	DO NOT EXPAND THE HOLE TOO MUCH.
NO SOUND PRODUCED.	RELAY CIRCUIT BOARD CONNECTOR IS DISCONNECTED.	CONNECT THE WIRE HARNESS.	CONNECT THE WIRE HARNESS.			
	HAMMER WIRE HARNESS IS DISCONNECTED.	CONNECT THE WIRE HARNESS.	1. REMOVE THE KEY AND LIFT THE HAMMER.		PHILLIPS SCREWDRIVER	
			2. REMOVE THE CIRCUIT BOARD AND RECONNECT THE WIRE HARNESS.			
	HAMMER RELAY WIRE HARNESS IS DISCONNECTED.	CONNECT THE WIRE HARNESS.	1. REMOVE THE KEY AND LIFT THE HAMMER.		PHILLIPS SCREWDRIVER	
			2. REMOVE THE CIRCUIT BOARD AND RECONNECT THE WIRE HARNESS.			
	KSN2 ON THE HAMMER SIDE IS BROKEN.	REPLACE THE CIRCUIT BOARD.	1. REMOVE THE KEY AND LIFT THE HAMMER.	HAMMER CIRCUIT BOARD	CLIP	ALSO INSTALLABLE BY HAND.
			2. REPLACE THE CIRCUIT BOARD WITH A NEW ONE.		PHILLIPS SCREWDRIVER	
	HAMMER RUBBER CONTACT IS DEFECTIVE.	REPLACE THE RUBBER.	1. REMOVE THE KEY AND LIFT THE HAMMER.	RUBBER CONACT	CLIP	ALSO INSTALLABLE BY HAND.
			2. REMOVE THE CIRCUIT BOARD.		PHILLIPS SCREWDRIVER	
			3. REPLACE THE RUBBER CONTACT WITH A NEW ONE.			
KEY-OFF POSITION DEEP.	RELAY CIRCUIT BOARD CONNECTOR IS DISCONNECTED.	CONNECT THE WIRE HARNESS.	CONNECT THE WIRE HARNESS.			
	DAMPER WIRE HARNESS IS DISCONNECTED.	CONNECT THE WIRE HARNESS.	1. REMOVE THE KEY.		PHILLIPS SCREWDRIVER	
			2. REMOVE THE CIRCUIT BOARD AND RECONNECT THE WIRE HARNESS.			
	DAMPER RELAY WIRE HARNESS IS DISCONNECTED.	CONNECT THE WIRE HARNESS.	1. REMOVE THE KEY.		PHILLIPS SCREWDRIVER	
			2. REMOVE THE CIRCUIT BOARD AND RECONNECT THE WIRE HARNESS.			
	KSNE2 ON DAMPER SIDE IS BROKEN.	REPLACE THE CIRCUIT BOARD OR KSNE2.	1. REMOVE THE KEY.	DAMPER CIRCUIT BOARD	CLIP	ALSO INSTALLABLE BY HAND.
			2. REPLACE THE CIRCUIT BOARD WITH A NEW ONE.		PHILLIPS SCREWDRIVER	
	DAMPER RUBBER CONTACT IS DEFECTIVE.	REPLACE THE RUBBER.FIXTURE.	1. REMOVE THE KEY.	RUBBER CONTACT	CLIP	IF THERE IS NO CLIP, THE CIRCUIT BOARD HAS TO BE REMOVED.
			2. REPLACE THE RUBBER CONTACT WITH A NEW ONE.		PHILLIPS SCREWDRIVER	

SYMPTOM	CAUSE	ACTION	PROCEDURE	PART	TOOL	REMARKS
SOUNDS NOT CUT OFF.	* REFER TO "**KEY-OFF POSITION IS DEEP**".	←	←	←	←	←
	DAMPER CIRCUIT BOARD OR ITS FIXTURE IS LOOSE.	RETIGHTEN THE SCREW FOR PCB FIXTURE .	1. REMOVE THE KEY. 2. REMOVE THE CIRCUIT BOARD. 3. RETIGHTEN THE FIXING SCREW FOR PCB FIXTURE.		PHILLIPS SCREWDRIVER	

● MALFUNCTION OF BACK RAIL CUSHION

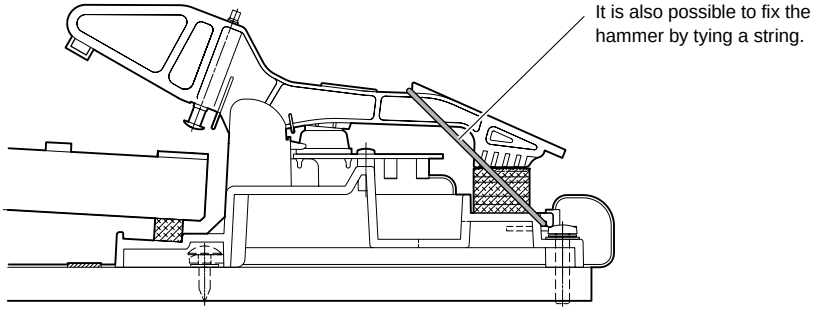

(Fig. 3)

● REPLACE WITH ANOTHER CABINET MATERIAL

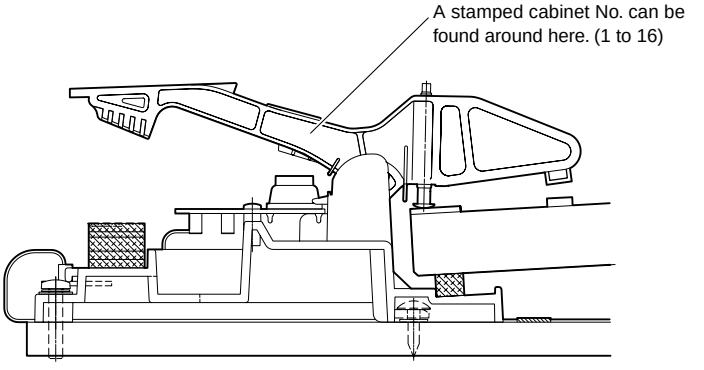

(Fig. 4)

■ TEST PROGRAM

1. Preparation

1) Measuring instruments: Frequency counter, level meter (with JIS-C filter)
Note) [PHONES] jack: 33Ω load, [AUX OUT] jack: 10kΩ load
2) Jigs: Foot volume (FC-7), MIDI cable, Floppy disks (2HD & 2DD, one each), USB cable
3) Personal computer: DOS/V type

Note: In advance, install a MIDI-USB driver in the PC. Set to the Thru On position on the PC side.



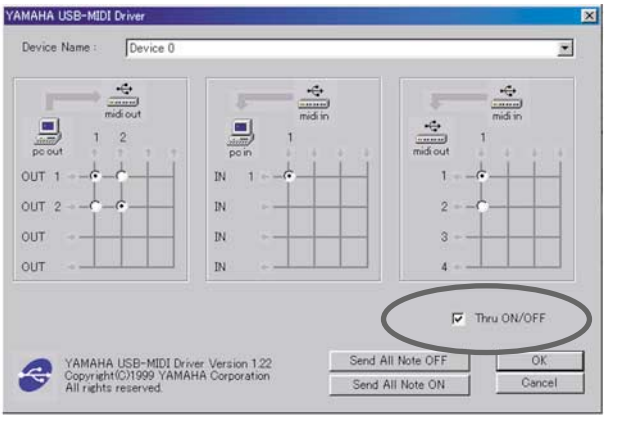

* ***Download the MIDI-USB driver from the YSISS Home Page.***
(YSISS URL >>http://plaza.yamaha.co.jp/ysiss/exindex.nsf)

2. How to enter the Test Program

While pressing the [C#2], [F2] and [G#2] keys, turn on the [POWER] switch.

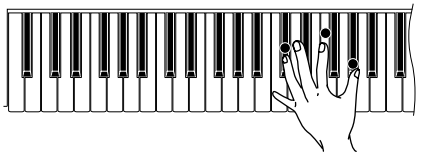

3. Proceeding through the Test Program

When the test program is activated, the sign “TEST CLP 175” appears on the LCD display.
Select the test program item by pressing the [UP] or [DOWN] button of [TEMPO].
Press the [START/STOP] button of [METRONOME] to execute testing.

When the test result is OK, press the [START/STOP] button of [METRONOME] to return to the screen of test items for selection. Select the next test item by pressing the [UP] or [DOWN] button of [TEMPO]. When the test result is OK, an asterisk (*) is added in front of its item name on display.

When the test result is NG, press the [DEMO] button to return to the screen of test items for selection and then turn off the [POWER] switch to end the test program.

4. Test program list

No.	LCD	Function and judgment criteria
1	001: Main Version	Displays the Main ROM version. The ROM (Program) version is displayed.
2	002: Wave Version	Displays the Wave ROM version. The Wave ROM version is displayed.
3	003: Main Rom Chk1	Checks ROMs that are connected to the CPU bus. Outputs the C4 sine wave when the check result is OK and “Main Rom Chk1 OK” is displayed on the LCD display.
4	004: Main Ram Chk1	Checks RAMs that are connected to the CPU bus. Outputs the C4 sine wave when the check result is OK and “Main Ram Chk1 OK” is displayed on the LCD display.
5	005: FlashRom Chk1	Checks Flash Memories that are connected to the CPU bus. Outputs the C4 sine wave when the check result is OK and “Flash Chk1 OK” is displayed on the LCD display. It takes about 10 seconds.
6	006: WaveRom Chk1	Checks Wave ROMs. Outputs the C4 sine wave when the check result is OK and “WaveRom Chk1 OK” is displayed on the LCD display.
7	007: FDD Chk	Checks the floppy disk drive unit. Insert 2HD and 2DD floppy disks one by one into the floppy disk drive unit. The test will be executed immediately if a floppy disk is loaded in the drive unit. Make sure to check both 2DD and 2HD types by replacing one with the other. Displays “FDD TEST OK” when the test result is OK. Displays “NO FD” and stands by for a floppy disk loading if the inserted floppy disk is removed before completion of the test. Displays “PROTECT” when a write-protected floppy disk is inserted. A floppy disk in such state cannot be used for testing. Displays “UNFORMAT” when a non-formatatted floppy disk is inserted. Such a floppy disk cannot be used for testing.
8	008: EffectRam Chk	Checks the effect RAM. Outputs the sine wave (C4) when the check result is OK and displays “EffectRam Chk OK” is displayed on the LCD display.
9	009: TG Chk	Checks the Sound Source (Autoscale). Sequentially outputs the sine wave by changing the tone of the sound source from the low keys (from C2 to G4). Check by hearing that the produced sound is free from noise and abnormal sound.
10	010: Pitch Chk	Checks the pitch. Connect the frequency counter to the [PHONES] jack. Outputs the sine wave at 440.5 ± 0.2Hz (PAN = Center) when the test is executed. Connect the level meter (with a JIS-C filter) to the [PHONES] jack. Set the [MASTER VOLUME] at the MIN. position and check the output level. PHONES L, R: -90.0dBm or less
11	011: Output R	Checks the R channel output. Connect the level meter (with a JIS-C filter) to each output terminal. Set the [MASTER VOLUME] at the MAX. position and check the output level of the R channel. (1kHz sine wave, PAN = R) PHONES L: -38.0dBm or less PHONES R: +2.0dBm ± 2dB AUX OUT L/L+R: -51.5dBm or less AUX OUT R: -1.5dBm ± 2dB AUX OUT (LEVEL FIXED)L: -52.0dBm or less AUX OUT (LEVEL FIXED)R: -2.0dBm ± 2dB

No.	LCD	Function and judgment criteria
12	012: Output L	Checks the L channel output. Connect the level meter (with a JIS-C filter) to each terminal. Set the [MASTER VOLUME] at the MAX. position and check the output level of the L channel. (1kHz sine wave, PAN = R) PHONES L: +2.0dBm ± 2dB PHONES R: -38.0dBm or less AUX OUT L/L+R: -1.5dBm ± 2dB AUX OUT R: -51.5dBm or less AUX OUT (LEVEL FIXED)L: -2.0dBm ± 2dB AUX OUT (LEVEL FIXED)R: -52.0dBm or less
13	013: EQ Low	Checks the EQ-LOW frequency. Measured value: - 2.0 dBm ±2 dB Check that 65.4Hz (C1) sine wave is output. (PAN = Center)
14	014: EQ Mid	Checks the EQ-MID frequency. Measured value: - 9.0 dBm ±2 dB Check that 523Hz (C4) sine wave is output. (PAN = Center)
15	015: EQ High	Checks the EQ-HIGH frequency. Measured value: - 2.5 dBm ± 2 dB Check that 4186Hz (C7) sine wave is output. (PAN = Center)
		Measurement terminal MA120B-CN6 1 pin : L ch 3 pin : R ch 2, 4 pin : GND
16	016: D/A Noise	This test item is included in the factory inspection.
17	017: SW, LED Chk	Checks the switches and LEDs on the panel. Press the switches as their names are indicated on the LCD. When each switch is pressed, its pre-assigned note is output. (See Table 1 on p. 51.) When the switch with LED is pressed, that LED will light up at the same time. Upon completion of checking all switches, “SW. LED Chk OK” is displayed on the LED display.
18	018: All LED On	Check that all LEDs light up.
19	019: Red LED On	Check that all red LEDs light up.
20	020: Green LED On	Check that all green LEDs light up.
21	021: All LCD On	Check that all LCD dots light up.
22	022: All LCD Off	Check that all LCD dots go off.
23	023: SoftPedal Chk	Checks the soft pedal. Check that the C3 note is output when the test is executed and the soft pedal is depressed and the C4 note is output when it is released. For the check result, check that “Soft Test OK” is displayed on the LCD display.
24	024: SostenutoPedalChk	Checks the sostenute pedal. Check that the C3 note is output when the test is executed and the sostenute pedal is depressed and the C4 note is output when it is released. For the check result, check that “Sostenute Test OK” is displayed on the LCD display.
25	025: DamperPedalChk	Checks the damper pedal. Check that the C3 note is output when the damper pedal is depressed and the C4 note is output when it is released. For the check result, check that “Damper Test OK” is displayed on the LCD display.
26	026: ExpPedalChk	Connect the foot volume (FC-7) to the [AUX PEDAL] jack. Check that the C3 note is output when the pedal is depressed fully to the back (DOWN) and the C4 note is output when it is depressed fully to the front (UP). For the check result, check that “Aux Pedal OK” is displayed on the LCD display.
27	027: Song Balance Chk	Checks the SONG BALANCE controller. When the [SONG BALANCE] control is set to the “SONG” position, the C3 note is output and “SONG BAL MIN” is displayed on the LCD display, when it is set to the “KEYBOARD” position, the G3 note is output and “SONG BAL MAX” is displayed and when it is set back to the “CENTER” position, the C4 note is output and the check result is displayed on the LCD display. Check that “SONG BAL OK” is displayed.
28	028: Main Vol Chk	Checks the MASTER VOLUME. When the [MASTER VOLUME] control is set to the “MIN” position, “MAIN VOL MIN” is displayed on the LCD display and when it is set to the “MAX” position, the check result is displayed. Check that “MAIN VOL OK” is displayed.

No.	LCD	Function and judgment criteria
29	029: Midi Chk	After connecting the [MIDI IN] jack and the [MIDI OUT] jack with a MIDI cable, execute the test. (Keep the [HOST SELECT] switch at the MIDI position.) Then the C4 tone is output and the check result is displayed on the LCD display. Check that “Midi Chk OK” is displayed.
30	030: To Host Chk	Short-circuit between pins 3 and 5, pins 6 and 8 of the [TO HOST] terminal and execute the test. Change the [HOST SELECT] switch position according to the LCD indication and check that the following tone is output at each postiion. (C3 at USB, C4 at PC and C5 at MAC). For the check result, check that “To Host Chk OK” is displayed on the LCD display.
31	031: USB Chk	Checks the USB jack. Connect the [USB] jack and the personal computer with a USB cable and set the [HOST SELECT] switch to the USB position. ***Note: In advance, install a MIDI-USB driver in the PC. Set to the Thru On position on the PC side.*** When the test is executed, “USB Chk In” is displayed on the LCD display. When the cable is disconnected, “USB Chk Out” is displayed on the LCD display. For the check result, check that the C4 tone is output and “USB Chk OK” is displayed. (Set to the Thru On position on the computer side.)
32	032: Keyboard Type Chk	Checks the keyboard type. When the test is executed, the C4 tone is output and check result is displayed on the LCD display. Check that “KeyType OK (WOOD)” is displayed.
33	033: MakePosition Chk	Execute the test and press the key. The corresponding note is output and the note No. and the No. being made are displayed on the LCD display. For the check result, check that “Make Position Chk OK” is displayed on the LCD display.
34	034: Keyboard Chk1	Execute the test and press the key. The corresponding note is output and the note No. and the velocity being 1-2 made are displayed on the LCD display. For the check result, check that “Keyboard Chk1 OK” is displayed on the LCD display.
35	035: Keyboard Chk2	Execute the test and press the key. The corresponding note is output and the note No. and the velocity being 2-3 made are displayed on the LCD display. For the check result, check that “Keyboard Chk2 OK” is displayed on the LCD display.
36	036: Afc Chk	With the AFC function, the sounds from the main unit and inside of the Clavinova collected by the built-in microphone are processed as signals and output through the speaker located at the underside, thus providing a three-dimensional effect with depth feeling. Clap your hands close to the built-in microphone and check that reverberation is output through the AFC speaker located at the underside of the main unit. Sound should be outputted from the AFC speaker of the channel of the direction put close to the microphone. (L/R check) The LCD display remains unchanged as “Afc Chk”.
37	037: Lid Open/Close Chk	The following operation performs a lid Open/Close check. If the state of a lid is closed now. Open → Close If the state of a lid is open now. Close → Open Judgment OK: It is displayed as “Lid Open/Close Chk OK”, the C4 tone is output. NG: With “Open/Close Chk — ” displays.
38	038: Main Rom Chk2	Checks all the ROMs that are connected to the CPU bus. For the check result, check that “Main Rom Chk2 OK” is displayed on the LCD display.
39	039: Main Ram Chk2	Checks all the RAMs that are connected to the CPU bus. For the check result, check that “Main Ram Chk2 OK” is displayed on the LCD display.
40	040: FlashRom Chk2	Checks all the flash memories that are connected to the CPU bus. For the check result, check that “Flash Chk2 OK” is displayed on the LCD display. It takes about 55 seconds.
41	041: WaveRom Chk2	Checks the WAVE ROMs. For the check result, check that “Wave Rom Chk2 OK” is displayed on the LCD display. It takes about 30 seconds.

No.	LCD	Function and judgment criteria
42	042: EffectRam Chk2	Checks the Effect RAMs. For the check result, check that “Effect Ram Chk2 OK” is displayed on the LCD display. It takes about 10 seconds.
43	043: Factory Set	When this test is executed, the factory preset data will be set in the Flash ROMs when the power is turned on the next time. Check that “Factory Set OK” is displayed on the LCD display. It takes about 20 seconds.
44	044: Test Exit	When the test is executed, the test program will exit and the play mode will be set.

* 0 dBm = 0.775 V

Table 1

Order	Switch Name	Note	Order	Switch Name	Note
1	DEMO	G1	31	VIBRAPHONE	C#4
2	SONG SELECT ⏮	G#1	32	GUITAR	D4
3	SONG SELECT ⏭	A1	33	CHURCH ORGAN	D#4
4	SONG TRACK 1	A#1	34	JAZZ ORGAN	E4
5	SONG TRACK 2	B1	35	STRINGS	F4
6	SONG EXTRA TRACKS	C2	36	CHOIR	F#4
7	SONG TOP	C#2	37	SYNTH. PAD	G4
8	SONG START/STOP	D2	38	WOOD BASS	G#4
9	SONG REC	D#2	39	E. BASS	A4
10	FILE	E2	40	XG	A#4
11	SONG SETTING	F2	41	VOICE SETTING	B4
12	METRONOME START/STOP	F#2	42	SPLIT	C5
13	METRONOME SETTING	G2	43	REVERB	C#5
14	TEMPO DOWN	G#2	44	CHORUS	D5
15	TEMPO UP	A2	45	VARIATION DOWN (▼)	D#5
16	LCD A -	A#2	46	VARIATION UP (▲)	E5
17	LCD A +	B2	47	BRILLIANCE MELLOW	F5
18	LCD C -	C3	48	BRILLIANCE BRIGHT	F#5
19	LCD C +	C#3	49	iAFC ON/OFF	G5
20	LCD B -	D3	50	iAFC SETTING	G#5
21	LCD B +	D#3	51	MIDI SETTING	A5
22	LCD D -	E3	52	OTHER SETTING	A#5
23	LCD D +	F3			
24	EXIT	F#3			
25	GRAND PIANO1	G3			
26	GRAND PIANO2	G#3			
27	E.PIANO1	A3			
28	E.PIANO2	A#3			
29	HARPSICHORD	B3			
30	E.CLAVICHORD	C4			

● Initialization

The system will be initialized and the factory preset state will be restored when the [POWER] switch is pressed while pressing the highest (rightmost) white key on the keyboard.

■ MESSAGE LIST

The messages are listed in alphabetical order.

Message	Meaning
BulkDataReceiving Completed	This will be displayed following the “BulkDataReceiving Voice” message. This indicates that the Clavinova finished receiving the bulk data. Once you have verified this message, you may proceed to the next step.
BulkDataReceiving Error	Receiving bulk data has failed. Check the parameter settings and try again.
BulkDataReceiving Voice	The Clavinova is receiving the voice setting bulk data while this message is displayed. Wait until the message disappears, then proceed to the next step.
Calibration Error DefaultReset	This message will appear if a sound is audible in the vicinity of the Clavinova during automatic adjustment. The automatic adjustment may abort, and the settings reset to their default values. In this case, perform the automatic adjustment once again.
Calibration Headphones are connected	This message means that when the “Speaker” setting is set to Normal and headphones are connected, no sound is output from the speaker on the bottom face, and therefore automatic adjustment of iAFC is not possible. In this case, unplug the headphones.
Calibration Lid is closed. Open lid.	This message means that automatic adjustment of iAFC is not possible because the lid is closed or open with the shorter stay. In this case, open the lid with the longer stay using the inner recess.
Calibration Speaker sound is off	This message means that automatic adjustment of iAFC is not possible because no sound is output from the speaker on the bottom face. In this case if the “Speaker” setting is Off, turn “Speaker” On. If “Speaker” is set to Normal and headphones are connected, unplug the headphones.
Canceled	This message confirms that in the “VoiceBulkDump” operation of the owner’s manual, you pressed the B [– (NO)] button to cancel while data was being transmitted.
Completed	This message is displayed following the message “Executing.” The Clavinova’s internal processing is complete. You may proceed to the next step.
DeleteFile?-->	When you delete a folder, this message asks you whether you want to delete all of the files in that folder. To delete all files in the folder, press the D [+ (YES)] button. To cancel, press the D [– (NO)] button.
DiskError	Writing or reading data from the disk has failed. Try again. If you still see this message, the disk may be damaged or the disk drive may have malfunction. If you see this message while using a brand new disk, it is more likely that the disk drive is malfunctioning. Ask your Yamaha dealer for repair.

Message	Meaning
	The floppy disk space is full and can no longer record data. Use a new disk or delete unnecessary files from the disk to make room for new data.
	You attempted to eject a floppy disk from the disk drive while the drive was writing or reading. The writing or reading operation is not complete yet. Try it again.
	When you attempted to rename a song and save it, this message will appear if an identically-named song already exists in the save memory / floppy disk that contains that song. Three seconds after this message is displayed, you will return to the previous screen. Please specify a different name.
	This message prompts you to execute a file-related operation. Press the B [+ (YES)] button to proceed, or press the [EXIT] button to cancel.
	The Clavinova is processing the data internally. Wait until the message disappears, then proceed to the next step.
	The normal (factory default) settings (except for the memory song setting) have been restored. This message also appears if you press and hold down the C7 key and turn on the power to the Clavinova .
	The normal (factory default) settings (including the memory song setting) have been restored. This message also appears if you press and hold down the C7 and B♭6 keys and turn on the power to the Clavinova.
	The Clavinova's flash memory (storage memory) has expired. Consult your Yamaha dealer. If this message appears, the Clavinova will not back up the songs and settings in memory. Press the [EXIT] button to return to the previous screen.
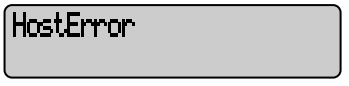	There is a problem with the TO HOST/USB connector **When using the CLP-175 connected to your personal computer ...** The driver or MIDI application on your computer is not functioning correctly, perhaps because the computer is turned off, the cable is not connected correctly, or the HOST SELECT switch is not set correctly. In this case, turn off the power of the CLP-175 and your computer, and check the cable connections and HOST SELECT switch setting. Then turn on the power in the order of your computer → CLP-175, and check that the driver and MIDI application on your computer are functioning correctly. **When using the CLP-175 by itself ...** This message may appear if a cable is left connected to the [TO HOST] or [USB] jack of the CLP-175. In this case, turn off the power of the CLP-175, disconnect the cable, and then turn on the power again. If the cable is left connected, the CLP-175 may not function correctly.

Message	Meaning
	You tried to make the copy disk, the copy source disk has not been inserted to the disk drive. Insert the disk.
	You tried to make the copy disk, the copy destination disk has not been inserted into the disk drive. Insert the disk.
	You turned off the power to the Clavinova while it was writing a song to storage memory. This message appears next time you turn on the power. The Clavinova checks if the contents of storage memory can be recovered.
	This message appears following the message “LastPowerOffIllegalMemorySongChecking,” indicating that the Clavinova recovered data in the storage memory as much as possible.
	This message appears following the message “LastPowerOffIllegalMemorySongChecking,” indicating that the Clavinova could not recover data in the storage memory and that all memory songs were deleted.
	While a preset song was being read, the Clavinova detected defects in memory. Reset the Clavinova to its normal (factory default) settings with “MemorySongIncluded” (refer to the owner’s manual) after you back up all song data.
	This message indicates that there may be a problem with the memory. If the message appears repeatedly when you continue using the Clavinova, back up the song data, then restore the default setting by using “FactorySet” with “MemorySongIncluded” selected (refer to the owner’s manual).
	There is not enough memory space left and you cannot save any more songs. Save songs to a floppy disk or delete some songs in the storage memory, then save new data to memory.
	A floppy disk has not been inserted into the disk drive for a diskrelated operation. Insert the disk and continue.
	This message will appear if there is no song for memory or disk to save. In this case, no song will be saved.
	You tried to delete a song that does not exist in the storage memory or on disk. You cannot delete the song.

Message	Meaning
OverWrite?	This message prompts you to select whether you wish to overwrite the existing data with new data when you add recordings to a song. Press the B [+ (YES)] button to allow overwriting. Press the B [– (NO)] button to cancel.
PleaseWait	You tried to start playing a song or perform another operation right after you select the song. Wait until the message disappears.
ProtectedDisk	1. You tried to write, copy, or delete data on a disk that has its "write protect" tab on, or a disk that is internally protected against writing. Set the protect tab to off (unprotected) and try again. If you still see this message, the disk is internally protected (such as commercially available music data). You cannot write or copy to such a disk. 2. This message also appears when you try to copy data on an internally-protected disk onto another disk. You cannot duplicate such a disk.
ProtectedFile	You tried to copy or delete data in internally-protected files (such as commercially available music data). You cannot write to, copy, or delete such files.
ProtectedSong	After you load an internally-protected song into the Clavinova's Current memory or storage memory, you tried to save the song to a floppy disk. You cannot save such a song to another disk. You cannot write or copy to such a disk.
Set?-->	This message prompts you to select whether you wish to save the edited settings. Press the B [+ (YES)] button to save the settings. Press the [EXIT] button to cancel.
SongChanged Save?	You tried to perform another operation before saving the recorded song to storage memory or a floppy disk. If you continue the operation, the recorded song will be lost. To delete the new recording, press the B [– (NO)] button. To keep the recording, press the B [+ (YES)] button. The Clavinova displays the "SaveToMemory" or "SaveToDisk" (refer to the owner's manual) parameter screen. If necessary, select "SaveToMemory" or "SaveToDisk" accordingly and save the recorded song, then proceed to another operation.

Message	Meaning
	1. This message will appear if a problem is found with the song data when you select a song or while the song is playing. In this case, reselect the song, and try once again to play it back. If the message still appears, the song data may have been damaged. 2. This message will appear if a different “CharacterCode” (refer to the owner’s manual) is selected than when you assigned the song name. In this case, switch the “CharacterCode”, re-select the song, and play back.
	1. This message will be displayed if current memory fills up during recording. Recording will stop automatically at this point. The data that had been recorded up to that point will remain. This message will also be displayed when you attempt to enter Record mode for additional recording if that song already occupies all of current memory. In this case, additional recording will not be possible. If there is an already-recorded track that you do not need to keep, you can use “ChannelClear” (refer to the owner’s manual) to delete the unneeded track, so that you will then be able to record the equivalent amount of additional material. 2. This message will be displayed when you select a song if that song is larger than the capacity of the current memory. This song cannot be loaded into the CLP-175, and cannot be played back. Please select a different song.
	This message will be displayed when you edit a song if that song is larger than the capacity of the current memory. This song cannot be edited on the CLP-175.
	This message prompts you to start the operation. To start, press the B [+ (YES)] button. Press the [EXIT] button to cancel the operation.
	This message prompts you to confirm the execution. Press the B [+ (YES)] button to continue. Press the B [– (NO)] button to cancel.
	You tried to perform a file- or disk-related operation using an unformatted disk. Eject the disk, format it using the “FormatDisk” parameter (refer to the owner’s manual), and try again.
	You tried to perform a file- or disk-related operation using an unformatted disk. To cancel the operation, press the B [– (NO)] button. To format the disk and try again, press the B [+ (YES)] button.

Message	Meaning
	This message means that the Clavinova was unable to transmit voice bulk data. If this message appears, make sure that the power of your computer is not turned off, that the cable is connected correctly, that the HOST SELECT switch is set correctly, and that the driver on your computer is functioning correctly. Then try transmitting the data once again.
	You tried to copy data to a different type of disk (e.x.: 2DD → 2HD, 2HD → 2DD). Eject the disk and insert an appropriate disk.
	You used a period or space at the beginning of a song name or you tried to change a song name that includes a character (or characters) not supported by the CLP-175, and the CLP-175 could not process the name. The Clavinova displays the previous screen in three seconds. Rename the song correctly.

■ FACTORY SET

Restoring the normal (default) settings [FactorySet]

You can reset the CLP-175 to its normal (factory default) settings.

- The CharacterCode parameter setting in the File menu does not change.
- The MemoryBackUp parameter setting (On/Off) (left column) is reset to the normal setting.
- You can specify whether the memory songs are erased or kept.

Procedure

Press the [OTHER SETTING] button repeatedly as required to access the "FactorySet" menu.



Reset the Clavinova.

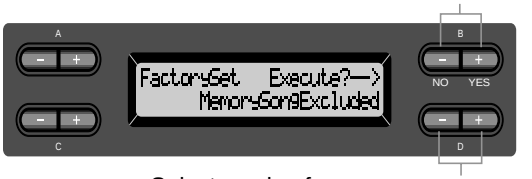

Select a value for memory songs.

Selecting for "MemorySong":

MemorySongExcluded ..... Memory songs are kept.
MemorySongIncluded ..... Memory songs are erased.

Other method for restoring the normal settings

Press and hold down the white key on the right end (C7) and press the [POWER] switch to turn on the power to the CLP-175. In this case, the Memory songs saved in the storage memory are not erased.

If you wish to erase Memory songs at this time, press and hold down the right-most white key (C7) and black key (B♭6) and press the [POWER] switch to turn on the power to the CLP-175.

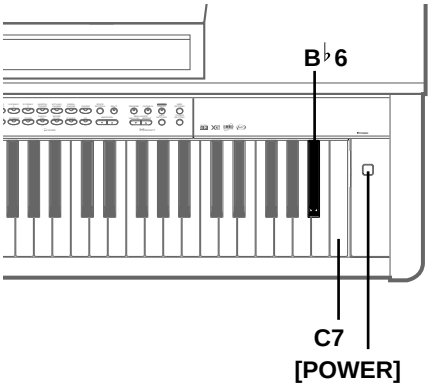

■ MIDI IMPLEMENTATION CHART

YAMAHA [Clavinova] MIDI Implementation Chart Date : 15 Nov 2002
Model: CLP-175 Version : 1.0

Function		Transmitted	Recognized	Remarks
Basic	Default	1–16	1–16	
Channel	Changed	1–16	1–16	
Mode	Default	3	3	
	Messages	x	x	
	Altered	**********	x	
Note		0–127	0–127	
Number:	True voice	**********	0–127	
Velocity	Note ON	o 9nH , v = 1–127	o 9nH , v = 1–127	
	Note OFF	x 9nH , v = 0	x	
After Touch	Key's	x	x	
	Ch's	x	o	
Pitch Bend		o	o 0–24 semi	
Control	0, 32	o	o	Bank Select
Change	1	x	o	Modulation
	5	x	o	Portament Time
	7, 10, 11	o	o	
	6, 38	o	o	Data Entry
	64, 66, 67	o	o	
	65	x	o	Portament
	71 , 74	o	o	Sound Controller
	72 , 73	x	o	Sound Controller
	84	x	o	Portament Control
	91, 93	o	o	Effect Depth
	94	x	o	Effect Depth
	96–97	x	o	RPN Inc,Dec
	98–99	x	o	NRPN LSB,MSB
	100–101	o	o	RPN LSB,MSB
	120	x	o	All Sound Off
Prog		o 0–127	o 0–127	
Change:	True #	**********		
System Exclusive		o	o	
Common :	Song Pos.	x	x	
:	Song Sel.	x	x	
:	Tune	x	x	
System :	Clock	o	x	
Real Time :	Commands	o	o	
Aux :	All Sound Off	x	o (120, 126–127)	
:	Reset All Cntrls	x	o (121)	
:	Local ON/OF	x	x	
:	All Notes OFF	x	o	
Messages :	Active Sense	o	o	
:	Reset	x	x	
Notes:				

Mode 1 : OMNI ON , POLY Mode 2 : OMNI ON ,MONO o : Yes
Mode 3 : OMNI OFF, POLY Mode 4 : OMNI OFF,MONO x : No

■ MIDI DATA FORMAT

Many MIDI messages listed in the MIDI Data Format are expressed in decimal numbers, binary numbers and hexadecimal numbers. Hexadecimal numbers may include the letter “H” as a suffix.

Also, “n” can freely be defined as any whole number. To enter data/values, refer to the table below.

decimal	hexadecimal	binary
0	00	0000 0000
1	01	0000 0001
2	02	0000 0010
3	03	0000 0011
4	04	0000 0100
5	05	0000 0101
6	06	0000 0110
7	07	0000 0111
8	08	0000 1000
9	09	0000 1001
10	0A	0000 1010
11	0B	0000 1011
12	0C	0000 1100
13	0D	0000 1101
14	0E	0000 1110
15	0F	0000 1111
16	10	0001 0000
17	11	0001 0001
18	12	0001 0010
19	13	0001 0011
20	14	0001 0100
21	15	0001 0101
22	16	0001 0110
23	17	0001 0111
24	18	0001 1000
25	19	0001 1001
26	1A	0001 1010
27	1B	0001 1011
28	1C	0001 1100
29	1D	0001 1101
30	1E	0001 1110
31	1F	0001 1111

decimal	hexadecimal	binary
32	20	0010 0000
33	21	0010 0001
34	22	0010 0010
35	23	0010 0011
36	24	0010 0100
37	25	0010 0101
38	26	0010 0110
39	27	0010 0111
40	28	0010 1000
41	29	0010 1001
42	2A	0010 1010
43	2B	0010 1011
44	2C	0010 1100
45	2D	0010 1101
46	2E	0010 1110
47	2F	0010 1111
48	30	0011 0000
49	31	0011 0001
50	32	0011 0010
51	33	0011 0011
52	34	0011 0100
53	35	0011 0101
54	36	0011 0110
55	37	0011 0111
56	38	0011 1000
57	39	0011 1001
58	3A	0011 1010
59	3B	0011 1011
60	3C	0011 1100
61	3D	0011 1101
62	3E	0011 1110
63	3F	0011 1111

decimal	hexadecimal	binary
64	40	0100 0000
65	41	0100 0001
66	42	0100 0010
67	43	0100 0011
68	44	0100 0100
69	45	0100 0101
70	46	0100 0110
71	47	0100 0111
72	48	0100 1000
73	49	0100 1001
74	4A	0100 1010
75	4B	0100 1011
76	4C	0100 1100
77	4D	0100 1101
78	4E	0100 1110
79	4F	0100 1111
80	50	0101 0000
81	51	0101 0001
82	52	0101 0010
83	53	0101 0011
84	54	0101 0100
85	55	0101 0101
86	56	0101 0110
87	57	0101 0111
88	58	0101 1000
89	59	0101 1001
90	5A	0101 1010
91	5B	0101 1011
92	5C	0101 1100
93	5D	0101 1101
94	5E	0101 1110
95	5F	0101 1111

decimal	hexadecimal	binary
96	60	0110 0000
97	61	0110 0001
98	62	0110 0010
99	63	0110 0011
100	64	0110 0100
101	65	0110 0101
102	66	0110 0110
103	67	0110 0111
104	68	0110 1000
105	69	0110 1001
106	6A	0110 1010
107	6B	0110 1011
108	6C	0110 1100
109	6D	0110 1101
110	6E	0110 1110
111	6F	0110 1111
112	70	0111 0000
113	71	0111 0001
114	72	0111 0010
115	73	0111 0011
116	74	0111 0100
117	75	0111 0101
118	76	0111 0110
119	77	0111 0111
120	78	0111 1000
121	79	0111 1001
122	7A	0111 1010
123	7B	0111 1011
124	7C	0111 1100
125	7D	0111 1101
126	7E	0111 1110
127	7F	0111 1111

- Except the table above, for example 144-159(decimal)/9nH/1001 0000-1001 1111(binary) denotes the Note On Message for each channel (1-16). 176-191/BnH/1011 0000-1011 1111 denotes the Control Change Message for each channel (1-16). 192-207/CnH/1100 0000-1100 1111 denotes the Program Change Message for each channel (1-16). 240/FOH/1111 0000 denotes the start of a System Exclusive Message. 247/F7H/1111 0111 denotes the end of a System Exclusive Message.
- aaH (hexidecimal)/0aaaaaaa (binary) denotes the data address. The address contains High, Mid, and Low.
- bbH/0bbbbbbb denotes the byte count.
- ccH/0ccccccc denotes the check sum.
- ddH/0ddddddd denotes the data/value.

Preset Voice List

- When you specify a program change as a number in the range of 0-127, specify a number that is one less than the program number listed below. For example, to specify program number 128, you would specify program change 127.

Voice group	Voice name	Bank MSB	Bank LSB	Program Change (1-128)
GRANDPIANO1	GrandPiano1	0	122	1
	MellowPiano	0	123	1
	RockPiano	0	122	3
	HonkyTonkPiano	0	122	4
GRANDPIANO2	GrandPiano2	0	112	1
	BrightPiano	0	112	2
E.PIANO1	E.Piano1	0	122	6
	SynthPiano	0	122	89
E.PIANO2	E.Piano2	0	122	5
	Vintage E.Piano	0	123	5
HARPSICHORD	Harpsichord8'	0	122	7
	Harpsichord8'+4'	0	123	7
E.CLAVICHORD	E.Clavichord	0	122	8
	Wah Clavi.	0	123	8
VIBRAPHONE	Vibraphone	0	122	12
	Marimba	0	122	13
	Celesta	0	122	9
GUITAR	NylonGuitar	0	122	25
	SteelGuitar	0	122	26

Voice group	Voice name	Bank MSB	Bank LSB	Program Change (1-128)
CHURCHORGAN	PipeOrganPrincipal	0	123	20
	PipeOrganTutti	0	122	20
	PipeOrganFlute1	0	124	20
	PipeOrganFlute2	0	125	20
JAZZORGAN	JazzOrgan	0	122	17
	RotaryOrgan	0	124	17
	MellowOrgan	0	125	17
STRINGS	Strings	0	122	49
	SynthStrings	0	122	51
	SlowStrings	0	122	50
CHOIR	Choir	0	122	53
	SlowChoir	0	123	53
	Scat	0	122	54
SYNTH.PAD	SynthPad1	0	122	90
	SynthPad2	0	123	89
WOOD BASS	WoodBass	0	122	33
	Bass&Cymbal	0	124	33
E.BASS	ElectricBass	0	122	34
	FretlessBass	0	122	36

MIDI CHANNEL MESSAGE (1)

○: available

MIDI Events	Status byte		1st Data byte			2nd Data byte			MIDI Reception (respond/ignore)			MIDI Transmission (generated data)			PLAY		REC
	Status		Data	(HEX)	Parameter	Data	(HEX)	Parameter	Song	Main Layer Left Left-Layer	Keyboard	Panel (main generation method)	Song	Midi	PLAY	REW	Recorded from panel
Key Off	8nH	(n:Channel Number)	kk		Key no. (0–127)	vv		Velocity(0–127)	○	○	○	×	○	×	○	×	×
Key On	9nH	(n:Channel Number)	kk		Key no. (0–127)	vv		Key On :vv=1–127 Key Off :vv=0	○	○	○	○ (Keyboard)	○	×	○	×	○
Control Change	BnH		0	(00H)	Bank Select MSB**	0 64 126 127	(00H) (40H) (7EH) (7FH)	Normal SFX voice SFX kit Drum kit	○	○	×	○ (Voice)	○	×	○	○	○
			1	(01H)	Modulation	0–127	(00H...7FH)	Data	○	○	○ (All manually played parts)	×	○	×	○	○	×
			5	(05H)	Portamento Time	0–127	(00H...7FH)	Data	○	○	○ (All manually played parts)	×	○	×	○	○	×
			6	(06H)	Data Entry MSB	0–127	(00H...7FH)	Data	○	○	○ (All manually played parts)	○ (Voice Setting)	○	×	○	○	○
			7	(07H)	Main Volume	0–127	(00H...7FH)	Data	○	○	○ (All manually played parts)	○ (Voice Setting)	○	×	○	○	○
			10	(0AH)	Panpot	0–127	(00H...7FH)	L64	○	○	○ (All manually played parts)	○ (Voice Setting)	○	×	○	○	○
			11	(0BH)	Expression	0–127	(00H...7FH)	Data	○	○	○ (All manually played parts)	○ (Pedal)	○	×	○	○	○
			32	(20H)	Bank Select LSB**	0–127	(00H...7FH)	Data	○	○	×	○ (Voice)	○	×	○	○	○
			38	(26H)	Data Entry LSB	0–127	(00H...7FH)	Data	○	○	○ (All manually played parts)	○ (Voice Setting)	○	×	○	×	○
			64	(40H)	Sustain(Damper)	0–127	(00H...7FH)	Data	○	○	○ (All manually played parts)	○ (Pedal)	○	×	○	○	○
			65	(41H)	Portamento	0–127	(00H...7FH)	0...63, 64...127 (OFF, ON)	○	○	○ (All manually played parts)	×	○	×	○	○	×
			66	(42H)	Sostenuto	0–127	(00H...7FH)	0...63, 64...127 (OFF, ON)	○	○	○ (All manually played parts)	○ (Pedal)	○	×	○	○	○
			67	(43H)	Soft Pedal	0–127	(00H...7FH)	0...63, 64...127 (OFF, ON)	○	○	○ (All manually played parts)	○ (Pedal)	○	×	○	○	○
			71	(47H)	Harmonic Content	0–127	(00H...7FH)	-64...0...+63	○	○	○ (All manually played parts)	○ (Voice Setting)	○	×	○	○	○
			72	(48H)	Release Time	0–127	(00H...7FH)	-64...0...+63	○	○	○ (All manually played parts)	×	○	×	○	○	×
			73	(49H)	Attack Time	0–127	(00H...7FH)	-64...0...+63	○	○	○ (All manually played parts)	×	○	×	○	○	×
			74	(4AH)	Brightness	0–127	(00H...7FH)	-64...0...+63	○	○	○ (All manually played parts)	○ (Voice Setting)	○	×	○	○	○
			84	(54H)	Portamento Control	0–127	(00H...7FH)	Key no. (0–127)	○	○	×	×	○	×	○	×	×
			91	(5BH)	Effect1 Depth (Reverb Send Level)	0–127	(00H...7FH)	Data	○	○	○ (All manually played parts)	○ (Voice Setting)	○	×	○	○	○
			93	(5DH)	Effect3 Depth (Chorus Send Level)	0–127	(00H...7FH)	Data	○	○	○ (All manually played parts)	○ (Voice Setting)	○	×	○	○	○
			94	(5EH)	Effect4 Depth (Variation Send Level)	0–127	(00H...7FH)	Data	○	○	○ (All manually played parts)	×	○	×	○	○	×
			96	(60H)	RPN Increment	–	–	*	○	○	×	×	○	×	○	×	×
			97	(61H)	RPN Decrement	–	–	*	○	○	×	×	○	×	○	×	×
			98	(62H)	NRPN LSB	0–127	(00H...7FH)	Data	○	○	×	×	○	×	○	○	×
			99	(63H)	NRPN MSB	0–127	(00H...7FH)	Data	○	○	×	×	○	×	○	○	×
			100	(64H)	RPN LSB	0–127	(00H...7FH)	Data	○	○	○ (All manually played parts)	○ (Voice Setting)	○	×	○	○	○
			101	(65H)	RPN MSB	0–127	(00H...7FH)	Data	○	○	○ (All manually played parts)	○ (Voice Setting)	○	×	○	○	○
Mode Message	BnH	(n:Channel Number)	120	(78H)	All Sound Off	0	(00H)	Data	○	○	○ (All manually played parts)	×	○	×	○	×	×
			121	(79H)	Reset All Controllers	0	(00H)	Data	○	×	×	×	○	×	○	×	×
			123	(7BH)	All Note Off	0	(00H)	Data	○	○	○ (All manually played parts)	×	○	×	○	×	×
			124	(7CH)	Omni Off	0	(00H)	Data	○	×	×	×	×	×	×	×	×
			125	(7DH)	Omni On	0	(00H)	Data	○	×	×	×	×	×	×	×	×
			126	(7EH)	Mono	0–16	(00H...10H)	Data	○	×	×	×	○	×	○	×	×
			127	(7FH)	Poly	0	(00H)	Data	○	×	×	×	○	×	○	×	×
Program Change**	CnH	(n:Channel Number)	pp	(00H...7FH)	Voice number (0–127)	–	–	–	○	○	×	○ (Voice)	○	×	○	○	○
Channel After Touch	DnH	(n:Channel Number)	vv	(00H...7FH)	Data	–	–	–	○	○	○ (All manually played parts)	×	○	×	○	×	×
Polyphonic After Touch	AnH	(n:Channel Number)	kk	(00H...7FH)	Key no. (0–127)	vv	(00H...7FH)	Data	○	×	×	×	○	×	○	×	×
Pitch Bend Change	EnH	(n:Channel Number)	cc	(00H...7FH)	LSB	dd	(00H...7FH)	MSB	○	○	○ (All manually played parts)	○ (Pedal)	○	×	○	○	○
Realtime Message	F8H	MIDI Clock	–		–	–		–	×			○			—	—	×
	FAH	Start	–		–	–		–	○			○			—	—	×
	FBH	Continue	–		–	–		–	×			×			—	—	×
	FCH	Stop	–		–	–		–	○			○			—	—	×
	FEH	Active Sens	–		–	–		–	○			○			—	—	×
	FFH	System Reset	–		–	–		–	×			×			—	—	×

* The data byte is ignored.

** For the Bank Select MSB, Bank Select LSB and Program Change numbers of the preset voices.

MIDI CHANNEL MESSAGE (2)

Parameters controlled by NRPN (Non-Registered Parameter Numbers)

NRPN		Data Entry		Parameter	Data Range	MIDI Reception (respond/ignore)			MIDI Transmission (generated data)			PLAY		REC
MSB	LSB	MSB	LSB			Song	Main Layer Left Left-Layer	Keyboard	Panel (main generation method)	Song	Midi	PLAY	REW	Recorded from panel
01H	08H	mmH	--	Vibrato Rate	mm : 00H-40H-7FH (-64...0...+63)	○	○	×	×	○	×	○	○	×
01H	09H	mmH	--	Vibrato Depth	mm : 00H-40H-7FH (-64...0...+63)	○	○	×	×	○	×	○	○	×
01H	0AH	mmH	--	Vibrato Delay	mm : 00H-40H-7FH (-64...0...+63)	○	○	×	×	○	×	○	○	×
01H	20H	mmH	--	Low Pass Filter Cutoff Frequency	mm : 00H-40H-7FH (-64...0...+63)	○	×	×	×	○	×	○	○	×
01H	21H	mmH	--	Low Pass Filter Resonance	mm : 00H-40H-7FH (-64...0...+63)	○	×	×	×	○	×	○	○	×
01H	30H	mmH	--	EQ BASS	mm : 00H-40H-7FH (-64...0...+63)	○	×	×	×	○	×	○	○	×
01H	31H	mmH	--	EQ TREBLE	mm : 00H-40H-7FH (-64...0...+63)	○	×	×	×	○	×	○	○	×
01H	34H	mmH	--	EQ BASS Frequency	mm : 04H-28H (32...2.0k [Hz])	○	×	×	×	○	×	○	○	×
01H	35H	mmH	--	EQ TREBLE Frequency	mm : 1CH-3AH (500...16.0k [Hz])	○	×	×	×	○	×	○	○	×
01H	63H	mmH	--	EG Attack Time	mm : 00H-40H-7FH (-64...0...+63)	○	×	×	×	○	×	○	○	×
01H	64H	mmH	--	EG Decay Time	mm : 00H-40H-7FH (-64...0...+63)	○	○	×	×	○	×	○	○	×
01H	66H	mmH	--	EG Release	mm : 00H-40H-7FH (-64...0...+63)	○	×	×	×	○	×	○	○	×
14H	rrH	mmH	--	Drum Low Pass Filter Cutoff Frequency	rr : drum instrument note number mm : 00H-40H-7FH (-64...0...+63)	○	×	×	×	○	×	○	×	×
15H	rrH	mmH	--	Drum Low Pass Filter Resonance	rr : drum instrument note number mm : 00H-40H-7FH (-64...0...+63)	○	×	×	×	○	×	○	×	×
16H	rrH	mmH	--	Drum EG Attack Rate	rr : drum instrument note number mm : 00H-40H-7FH (-64...0...+63)	○	×	×	×	○	×	○	×	×
17H	rrH	mmH	--	Drum EG Decay Rate	rr : drum instrument note number mm : 00H-40H-7FH (-64...0...+63)	○	×	×	×	○	×	○	×	×
18H	rrH	mmH	--	Drum Pitch Coarse	rr : drum instrument note number mm : 00H-40H-7FH (-64...0...+63)	○	×	×	×	○	×	○	×	×
19H	rrH	mmH	--	Drum Pitch Fine	rr : drum instrument note number mm : 00H-40H-7FH (-64...0...+63)	○	×	×	×	○	×	○	×	×
1AH	rrH	mmH	--	Drum Level	rr : drum instrument note number mm : 00H-7FH (0...127)	○	×	×	×	○	×	○	×	×
1CH	rrH	mmH	--	Drum Pan	rr : drum instrument note number mm : 00H, 01H-40H-7FH (RND, L63...C...R63)	○	×	×	×	○	×	○	×	×
1DH	rrH	mmH	--	Drum Reverb Send Level	rr : drum instrument note number mm : 00H-7FH (0...127)	○	×	×	×	○	×	○	×	×
1EH	rrH	mmH	--	Drum Chorus Send Level	rr : drum instrument note number mm : 00H-7FH (0...127)	○	×	×	×	○	×	○	×	×
1FH	rrH	mmH	--	Drum Variation Send Level	rr : drum instrument note number mm : 00H-7FH (0...127) (Variation Connection = SYSTEM) mm : 00H, 01H-7FH (OFF, ON) (Variation Connection = INSERTION)	○	×	×	×	○	×	○	×	×

NRPN MSB: 14H-1FH (for drums) message is accepted as long as the channel is set with a drum voice.
Data Entry LSB: Ignored.

Parameters controlled by RPN (Registered Parameter Numbers)

NRPN		Data Entry		Parameter	Data Range	MIDI Reception (respond/ignore)			MIDI Transmission (generated data)			PLAY		REC
MSB	LSB	MSB	LSB			Song	Main Layer Left Left-Layer	Keyboard	Panel (main generation method)	Song	Midi	PLAY	REW	Recorded from panel
00H	00H	mmH	--	Pitch Bend Sensitivity	mm : 00H-18H (0...+24 [semitones])	○	○	○ (All manually played parts)	○ (Other Setting)	○	×	○	○	○
00H	01H	mmH	llH	Fine Tune	mm ll : 00H 00H -100 [cent] ... mm ll : 40H 00H 0 [cent] ... mm ll : 7FH 7FH 100 [cent]	○	○	○ (All manually played parts)	○ (Voice Setting)	○	×	○	○	○
00H	02H	mmH	--	Coarse Tune	mm : 28H-40H-58H (-24...0...+24 [semitones])	○	○	○ (All manually played parts)	×	○	×	○	○	×
7FH	7FH	--	--	Null	–	○	○	○ (All manually played parts)	×	○	×	○	×	×

MIDI PARAMETER CHANGE TABLE

* Not Received when Receive Parameter SysEx is set to off.
* Not transmitted when Transmit Parameter SysEx is set to on.

MIDI Parameter Change table (XG SYSTEM) ◯: available

Address (H)			Size (H)	Data (H)	Parameter	Description	XG Default (H)	MIDI Reception (effective or not for each part)			MIDI Transmission (generated data)			PLAY		REC
								Song	Main Layer Left Left-Layer	Keyboard	Panel (main generation method)	Song	Midi	PLAY	REW	Recorded from panel
00	00	00 01 02 03	4	00-0F 00-0F 00-0F 00-0F	MASTER TUNE	-102.4...0...+102.3 [cent] 1st bit3-0 → bit15-12 2nd bit3-0 → bit11-8 3rd bit3-0 → bit7-4 4th bit3-0 → bit3-0	* Panel setting value	○			×	○	×	○	×	×
		04	1	00-7F	MASTER VOLUME	0...127	7F	○	×	×	×	○	×	○	○	×
		05	1	00-7F	MASTER ATTENUATOR	0...127	00	×	×	×	×	×	×	×	×	×
		06	1	28-58	TRANSPOSE	-24...0...+24 [semitones]	40	○	×	×	×	○	×	○	○	×
		7D	1	N	DRUM SETUP RESET	N:Drum setup number	–	○	×	×	×	○	×	○	×	×
		7E	1	00	XG SYSTEM ON	00=XG system ON	–	○	×	×	×	○	×	○	×	○
		7F	1	00	ALL PARAMETER RESET	00=ON	–	○	×	×	×	○	×	○	×	×

TOTAL SIZE 07

MIDI Parameter Change table (SYSTEM INFORMATION)

Address (H)			Size (H)	Data (H)	Parameter	Description	MIDI Reception (effective or not for each part)			MIDI Transmission (generated data)			PLAY		REC
							Song	Main Layer Left Left-Layer	Keyboard	Panel (main generation method)	Song	Midi	PLAY	REW	Recorded from panel
01	00	00 ... 0D	E	20-7F ... 20-7F	Model Name 1 ... Model Name 14	32...127(ASCII CHARACTER) ... 32...127(ASCII CHARACTER)	–	–	–	×	×	○	×	×	×
		0E	1		NOT USED										
		0F	1		NOT USED										

TOTAL SIZE 10

Transmitted in response to Dump Request. Not received.

MIDI Parameter Change table (EFFECT1)

Address (H)			Size (H)	Data (H)	Parameter	Description	XG Default (H)	MIDI Reception (effective or not for each part)			MIDI Transmission (generated data)			PLAY		REC
								Song	Main Layer Left Left-Layer	Keyboard	Panel (main generation method)	Song	Midi	PLAY	REW	Recorded from panel
02	01	00	2	00-7F 00-7F	REVERB TYPE MSB REVERB TYPE LSB	Refer to Effect Parameter List "	01(=HALL1) 00	○			○(Voice Setting)	○	×	○	○	○
		02	1	00-7F	REVERB PARAMETER 1	"	Depends on Reverb Type	○ (* Depends on Reverb Type)			×	○	×	○	○	×
		03	1	00-7F	REVERB PARAMETER 2	"	Depends on Reverb Type	○ (* Depends on Reverb Type)			×	○	×	○	○	×
		04	1	00-7F	REVERB PARAMETER 3	"	Depends on Reverb Type	○ (* Depends on Reverb Type)			×	○	×	○	○	×
		05	1	00-7F	REVERB PARAMETER 4	"	Depends on Reverb Type	○ (* Depends on Reverb Type)			×	○	×	○	○	×
		06	1	00-7F	REVERB PARAMETER 5	"	Depends on Reverb Type	○ (* Depends on Reverb Type)			×	○	×	○	○	×
		07	1	00-7F	REVERB PARAMETER 6	"	Depends on Reverb Type	○ (* Depends on Reverb Type)			×	○	×	○	○	×
		08	1	00-7F	REVERB PARAMETER 7	"	Depends on Reverb Type	○ (* Depends on Reverb Type)			×	○	×	○	○	×
		09	1	00-7F	REVERB PARAMETER 8	"	Depends on Reverb Type	○ (* Depends on Reverb Type)			×	○	×	○	○	×
		0A	1	00-7F	REVERB PARAMETER 9	"	Depends on Reverb Type	○ (* Depends on Reverb Type)			×	○	×	○	○	×
		0B	1	00-7F	REVERB PARAMETER 10	"	Depends on Reverb Type	○ (* Depends on Reverb Type)			×	○	×	○	○	×
		0C	1	00-7F	REVERB RETURN	-∞dB...0dB...+6dB(0...96...127)	40	○			×	○	×	○	○	×
		0D	1	01-7F	REVERB PAN	L63...C...R63	40	○			×	○	×	○	○	×

TOTAL SIZE 0E

02	01	10	1	00-7F	REVERB PARAMETER 11	Refer to Effect Parameter List	Depends on Reverb Type	○ (* Depends on Reverb Type)			×	○	×	○	○	×
		11	1	00-7F	REVERB PARAMETER 12	"	Depends on Reverb Type	○ (* Depends on Reverb Type)			×	○	×	○	○	×
		12	1	00-7F	REVERB PARAMETER 13	"	Depends on Reverb Type	○ (* Depends on Reverb Type)			×	○	×	○	○	×
		13	1	00-7F	REVERB PARAMETER 14	"	Depends on Reverb Type	○ (* Depends on Reverb Type)			×	○	×	○	○	×
		14	1	00-7F	REVERB PARAMETER 15	"	Depends on Reverb Type	○ (* Depends on Reverb Type)			×	○	×	○	○	×
		15	1	00-7F	REVERB PARAMETER 16	"	Depends on Reverb Type	○ (* Depends on Reverb Type)			×	○	×	○	○	×

TOTAL SIZE 06

Address (H)			Size (H)	Data (H)	Parameter	Description	XG Default (H)	MIDI Reception (effective or not for each part)			MIDI Transmission (generated data)			PLAY		REC
								Song	Main Layer Left Left-Layer	Keyboard	Panel (main generation method)	Song	Midi	PLAY	REW	Recorded from panel
02	01	20	2	00-7F 00-7F	CHORUS TYPE MSB CHORUS TYPE LSB	Refer to Effect Parameter List "	41(=CHORUS1) 00	○			○ (Voice Setting)	○	×	○	○	○
		22	1	00-7F	CHORUS PARAMETER 1	"	Depends on Chorus Type	○ (* Depends on Chorus Type)			×	○	×	○	○	×
		23	1	00-7F	CHORUS PARAMETER 2	"	Depends on Chorus Type	○ (* Depends on Chorus Type)			×	○	×	○	○	×
		24	1	00-7F	CHORUS PARAMETER 3	"	Depends on Chorus Type	○ (* Depends on Chorus Type)			×	○	×	○	○	×
		25	1	00-7F	CHORUS PARAMETER 4	"	Depends on Chorus Type	○ (* Depends on Chorus Type)			×	○	×	○	○	×
		26	1	00-7F	CHORUS PARAMETER 5	"	Depends on Chorus Type	○ (* Depends on Chorus Type)			×	○	×	○	○	×
		27	1	00-7F	CHORUS PARAMETER 6	"	Depends on Chorus Type	○ (* Depends on Chorus Type)			×	○	×	○	○	×
		28	1	00-7F	CHORUS PARAMETER 7	"	Depends on Chorus Type	○ (* Depends on Chorus Type)			×	○	×	○	○	×
		29	1	00-7F	CHORUS PARAMETER 8	"	Depends on Chorus Type	○ (* Depends on Chorus Type)			×	○	×	○	○	×
		2A	1	00-7F	CHORUS PARAMETER 9	"	Depends on Chorus Type	○ (* Depends on Chorus Type)			×	○	×	○	○	×
		2B	1	00-7F	CHORUS PARAMETER 10	"	Depends on Chorus Type	○ (* Depends on Chorus Type)			×	○	×	○	○	×
		2C	1	00-7F	CHORUS RETURN	-∞dB...0dB...+6dB(0...96...127)	40	○			×	○	×	○	○	×
		2D	1	01-7F	CHORUS PAN	L63...C...R63	40	○			×	○	×	○	○	×
		2E	1	00-7F	SEND CHORUS TO REVERB	-∞dB...0dB...+6dB(0...96...127)	00	○			×	○	×	○	○	×

TOTAL SIZE 0F

02	01	30	1	00-7F	CHORUS PARAMETER 11	Refer to Effect Parameter List	Depends on Chorus Type	○ (* Depends on Chorus Type)			×	○	×	○	○	×
		31	1	00-7F	CHORUS PARAMETER 12	"	Depends on Chorus Type	○ (* Depends on Chorus Type)			×	○	×	○	○	×
		32	1	00-7F	CHORUS PARAMETER 13	"	Depends on Chorus Type	○(* Depends on Chorus Type)			×	○	×	○	○	×
		33	1	00-7F	CHORUS PARAMETER 14	"	Depends on Chorus Type	○ (* Depends on Chorus Type)			×	○	×	○	○	×
		34	1	00-7F	CHORUS PARAMETER 15	"	Depends on Chorus Type	○ (* Depends on Chorus Type)			×	○	×	○	○	×
		35	1	00-7F	CHORUS PARAMETER 16	"	Depends on Chorus Type	○ (* Depends on Chorus Type)			×	○	×	○	○	×

TOTAL SIZE 06

Address (H)			Size (H)	Data (H)	Parameter	Description	XG Default (H)	MIDI Reception (effective or not for each part)			MIDI Transmission (generated data)			PLAY		REC
								Song	Main Layer Left Left-Layer	Keyboard	Panel (main generation method)	Song	Midi	PLAY	REW	Recorded from panel
02	01	40	2	00-7F 00-7F	VARIATION TYPE MSB VARIATION TYPE LSB	Refer to Effect Parameter List "	05(=DELAY L,C,R) 00		○		×	○	×	○	○	×
		42	2	00-7F 00-7F	VARIATION PARAMETER 1 MSB VARIATION PARAMETER 1 LSB	" "	Depends on Variation Type		○ (* Depends on Variation Type)		×	○	×	○	○	×
		44	2	00-7F 00-7F	VARIATION PARAMETER 2 MSB VARIATION PARAMETER 2 LSB	" "	Depends on Variation Type		○ (* Depends on Variation Type)		×	○	×	○	○	×
		46	2	00-7F 00-7F	VARIATION PARAMETER 3 MSB VARIATION PARAMETER 3 LSB	" "	Depends on Variation Type		○ (* Depends on Variation Type)		×	○	×	○	○	×
		48	2	00-7F 00-7F	VARIATION PARAMETER 4 MSB VARIATION PARAMETER 4 LSB	" "	Depends on Variation Type		○ (* Depends on Variation Type)		×	○	×	○	○	×
		4A	2	00-7F 00-7F	VARIATION PARAMETER 5 MSB VARIATION PARAMETER 5 LSB	" "	Depends on Variation Type		○ (* Depends on Variation Type)		×	○	×	○	○	×
		4C	2	00-7F 00-7F	VARIATION PARAMETER 6 MSB VARIATION PARAMETER 6 LSB	" "	Depends on Variation Type		○ (* Depends on Variation Type)		×	○	×	○	○	×
		4E	2	00-7F 00-7F	VARIATION PARAMETER 7 MSB VARIATION PARAMETER 7 LSB	" "	Depends on Variation Type		○ (* Depends on Variation Type)		×	○	×	○	○	×
		50	2	00-7F 00-7F	VARIATION PARAMETER 8 MSB VARIATION PARAMETER 8 LSB	" "	Depends on Variation Type		○ (* Depends on Variation Type)		×	○	×	○	○	×
		52	2	00-7F 00-7F	VARIATION PARAMETER 9 MSB VARIATION PARAMETER 9 LSB	" "	Depends on Variation Type		○ (* Depends on Variation Type)		×	○	×	○	○	×
		54	2	00-7F 00-7F	VARIATION PARAMETER 10 MSB VARIATION PARAMETER 10 LSB	" "	Depends on Variation Type		○ (* Depends on Variation Type)		×	○	×	○	○	×
		56	1	00-7F	VARIATION RETURN	-∞dB...0dB...+6dB(0...96...127)	40		○		×	○	×	○	○	×
		57	1	01-7F	VARIATION PAN	L63...C...R63	40		○		×	○	×	○	○	×
		58	1	00-7F	SEND VARIATION TO REVERB	-∞dB...0dB...+6dB(0...96...127)	00		○		×	○	×	○	○	×
		59	1	00-7F	SEND VARIATION TO CHORUS	-∞dB...0dB...+6dB(0...96...127)	00		○		×	○	×	○	○	×
		5A	1	00-01	VARIATION CONNECTION	INSERTION, SYSTEM	00		○		×	○	×	○	○	×
		5B	1	00-7F	VARIATION PART NUMBER	Reception: Part1...16(0...15) Transmission: Part1...16(0...15) AD(64) OFF(127)	7F		○		×	○	×	○	○	×
		5C	1	00-7F	MW VARIATION CONTROL DEPTH	-64...0...+63	40		○		×	○	×	○	○	×
		5D	1	00-7F	BEND VARIATION CONTROL DEPTH	-64...0...+63	40		○		×	○	×	○	○	×
		5E	1	00-7F	CAT VARIATION CONTROL DEPTH	-64...0...+63	40		○		×	○	×	○	○	×
		5F	1	00-7F	AC1 VARIATION CONTROL DEPTH	-64...0...+63	40		○		×	○	×	○	○	×
		60	1	00-7F	AC2 VARIATION CONTROL DEPTH	-64...0...+63	40		○		×	○	×	○	○	×
TOTAL SIZE			21													

02	01	70	1	00-7F	VARIATION PARAMETER 11	Refer to Effect Parameter List	Depends on Variation Type		○ (* Depends on Variation Type)		×	○	×	○	○	×
		71	1	00-7F	VARIATION PARAMETER 12	"	Depends on Variation Type		○ (* Depends on Variation Type)		×	○	×	○	○	×
		72	1	00-7F	VARIATION PARAMETER 13	"	Depends on Variation Type		○ (* Depends on Variation Type)		×	○	×	○	○	×
		73	1	00-7F	VARIATION PARAMETER 14	"	Depends on Variation Type		○ (* Depends on Variation Type)		×	○	×	○	○	×
		74	1	00-7F	VARIATION PARAMETER 15	"	Depends on Variation Type		○ (* Depends on Variation Type)		×	○	×	○	○	×
		75	1	00-7F	VARIATION PARAMETER 16	"	Depends on Variation Type		○ (* Depends on Variation Type)		×	○	×	○	○	×
TOTAL SIZE			06													

MIDI Parameter Change table (EFFECT2)

Address (H)			Size (H)	Data (H)	Parameter	Description	MIDI Reception (effective or not for each part)			MIDI Transmission (generated data)			PLAY		REC
							Song	Main Layer Left Left-Layer	Keyboard	Panel (main generation method)	Song	Midi	PLAY	REW	Recorded from panel
03	n	00	2	00-7F	INSERTION EFFECT TYPE MSB	Refer to Effect Parameter List	○			○ (Voice Setting)	○	×	○	○	○
				00-7F	INSERTION EFFECT TYPE LSB	"									
		02	1	00-7F	INSERTION EFFECT PARAMETER 1	"	○ (* Depends on Insertion Type)			○ (Voice Setting)	○	×	○	○	○
		03	1	00-7F	INSERTION EFFECT PARAMETER 2	"	○ (* Depends on Insertion Type)			×	○	×	○	○	×
		04	1	00-7F	INSERTION EFFECT PARAMETER 3	"	○ (* Depends on Insertion Type)			○ (Voice Setting)	○	×	○	○	○
		05	1	00-7F	INSERTION EFFECT PARAMETER 4	"	○ (* Depends on Insertion Type)			×	○	×	○	○	×
		06	1	00-7F	INSERTION EFFECT PARAMETER 5	"	○ (* Depends on Insertion Type)			×	○	×	○	○	×
		07	1	00-7F	INSERTION EFFECT PARAMETER 6	"	○ (* Depends on Insertion Type)			×	○	×	○	○	×
		08	1	00-7F	INSERTION EFFECT PARAMETER 7	"	○ (* Depends on Insertion Type)			×	○	×	○	○	×
		09	1	00-7F	INSERTION EFFECT PARAMETER 8	"	○ (* Depends on Insertion Type)			×	○	×	○	○	×
		0A	1	00-7F	INSERTION EFFECT PARAMETER 9	"	○ (* Depends on Insertion Type)			×	○	×	○	○	×
		0B	1	00-7F	INSERTION EFFECT PARAMETER 10	"	○ (* Depends on Insertion Type)			○ (Voice Setting)	○	×	○	○	○
		0C	1	00-7F	INSERTION EFFECT PART NUMBER	Reception: Part1...16(0...15) Transmission: Part1...16(0...15) AD(64) OFF(127)	○			○ (Voice)	○	×	○	○	○
		0D	1	00-7F	MW INSERTION CONTROL DEPTH	-64...0...+63	○			×	○	×	○	○	×
		0E	1	00-7F	BEND INSERTION CONTROL DEPTH	-64...0...+63	○			×	○	×	○	○	×
		0F	1	00-7F	CAT INSERTION CONTROL DEPTH	-64...0...+63	○			×	○	×	○	○	×
		10	1	00-7F	AC1 INSERTION CONTROL DEPTH	-64...0...+63	○			×	○	×	○	○	×
		11	1	00-7F	AC2 INSERTION CONTROL DEPTH	-64...0...+63	○			×	○	×	○	○	×
TOTAL SIZE			12												
		20	1	00-7F	INSERTION EFFECT PARAMETER 11	Refer to Effect Parameter List	○ (* Depends on Insertion Type)			×	○	×	○	○	×
		21	1	00-7F	INSERTION EFFECT PARAMETER 12	"	○ (* Depends on Insertion Type)			×	○	×	○	○	×
		22	1	00-7F	INSERTION EFFECT PARAMETER 13	"	○ (* Depends on Insertion Type)			×	○	×	○	○	×
		23	1	00-7F	INSERTION EFFECT PARAMETER 14	"	○ (* Depends on Insertion Type)			×	○	×	○	○	×
		24	1	00-7F	INSERTION EFFECT PARAMETER 15	"	○ (* Depends on Insertion Type)			×	○	×	○	○	×
		25	1	00-7F	INSERTION EFFECT PARAMETER 16	"	○ (* Depends on Insertion Type)			○ (Voice Setting)	○	×	○	○	○
TOTAL SIZE			6												
		30	2	00-7F	INSERTION EFFECT PARAMETER 1 MSB	Refer to Effect Parameter List	○ (* Depends on Insertion Type)			×	○	×	○	○	×
				00-7F	INSERTION EFFECT PARAMETER 1 LSB	"									
		32	2	00-7F	INSERTION EFFECT PARAMETER 2 MSB	"	○ (* Depends on Insertion Type)			×	○	×	○	○	×
				00-7F	INSERTION EFFECT PARAMETER 2 LSB	"									
		34	2	00-7F	INSERTION EFFECT PARAMETER 3 MSB	"	○ (* Depends on Insertion Type)			×	○	×	○	○	×
				00-7F	INSERTION EFFECT PARAMETER 3 LSB	"									
		36	2	00-7F	INSERTION EFFECT PARAMETER 4 MSB	"	○ (* Depends on Insertion Type)			×	○	×	○	○	×
				00-7F	INSERTION EFFECT PARAMETER 4 LSB	"									
		38	2	00-7F	INSERTION EFFECT PARAMETER 5 MSB	"	○ (* Depends on Insertion Type)			×	○	×	○	○	×
				00-7F	INSERTION EFFECT PARAMETER 5 LSB	"									
		3A	2	00-7F	INSERTION EFFECT PARAMETER 6 MSB	"	○ (* Depends on Insertion Type)			×	○	×	○	○	×
				00-7F	INSERTION EFFECT PARAMETER 6 LSB	"									
		3C	2	00-7F	INSERTION EFFECT PARAMETER 7 MSB	"	○ (* Depends on Insertion Type)			×	○	×	○	○	×
				00-7F	INSERTION EFFECT PARAMETER 7 LSB	"									
		3E	2	00-7F	INSERTION EFFECT PARAMETER 8 MSB	"	○ (* Depends on Insertion Type)			×	○	×	○	○	×
				00-7F	INSERTION EFFECT PARAMETER 8 LSB	"									
		40	2	00-7F	INSERTION EFFECT PARAMETER 9 MSB	"	○ (* Depends on Insertion Type)			×	○	×	○	○	×
				00-7F	INSERTION EFFECT PARAMETER 9 LSB	"									
		42	2	00-7F	INSERTION EFFECT PARAMETER 10 MSB	"	○ (* Depends on Insertion Type)			○ (Voice Setting)	○	×	○	○	○
				00-7F	INSERTION EFFECT PARAMETER 10 LSB	"									
TOTAL SIZE			14												

The EFFECT2 Parameter cannot be reset to its factory setting with XG SYSTEM ON.

The second byte of the address is considered as an Insertion effect number.
n : insertion effect number

For effect types that do not require MSB, the Parameters for Address 02-0B will be received and the Parameters for Address 30-42 will not be received.
For effect types that require MSB, the Parameters for Address 30-42 will be received and the Parameters for Address 02-0B will not be received.
When Bulk Dumps that include Effect Type data are transmitted, the Parameters for Address 02-0B will always be transmitted. But, effects that require MSB, when the bulk dump is received the Parameters for Address 02-0B will not be received.

MIDI Parameter Change table (MULTI PART)

Address (H)			Size (H)	Data (H)	Parameter	Description	XG Default (H)	MIDI Reception (effective or not for each part)			MIDI Transmission (generated data)			PLAY		REC
								Song	Main Layer Left Left-Layer	Keyboard	Panel (main generation method)	Song	Midi	PLAY	REW	Recorded from panel
08	nn	00	1	00-20	NOT USED			×	×	×	×	×	×	×	×	×
		01	1	00-7F	BANK SELECT MSB	0...127	part10=7F, other parts=00	○	○	×	×	○	×	○	○	×
		02	1	00-7F	BANK SELECT LSB	0...127	00	○	○	×	×	○	×	○	○	×
		03	1	00-7F	PROGRAM NUMBER	1...128	00	○	○	×	×	○	×	○	○	×
		04	1	00-0F,7F	Rcv CHANNEL	1...16,OFF	Part No.	○	×	×	×	○	×	○	×	×
		05	1	00-01	MONO/POLY MODE	MONO, POLY	01	○	×	×	×	○	×	○	×	×
		06	1	00-02	SAME NOTE NUMBER KEY ON ASSIGN	SINGLE, MULTI, INST(for Drum)	01	○	×	×	×	○	×	○	×	×
		07	1	00-03	PART MODE	NORMAL, DRUM, DRUMS1...2	part10=02, other parts=00	○	×	×	○ (Drum Voice)	○	×	○	×	○
		08	1	28-58	NOTE SHIFT	-24...0...+24 [semitones]	40	○	○	×	×	○	×	○	○	×
		09 0A	2	00-0F 00-0F	DETUNE	-12.8...0...+12.7 [Hz] 1st bit3-0 → bit7-4 2nd bit3-0 → bit3-0	08 00	○	○	×	×	○	×	○	×	×
		0B	1	00-7F	VOLUME	0...127	64	○	○	×	×	○	×	○	○	×
		0C	1	00-7F	VELOCITY SENSE DEPTH	0...127	40	○	○	×	○(Voice Setting)	○	×	○	○	○
		0D	1	00-7F	VELOCITY SENSE OFFSET	0...127	40	○	○	×	○(Voice Setting)	○	×	○	○	○
		0E	1	00-7F	PAN	RND,L63...C...R63	40	○	○	×	×	○	×	○	○	×
		0F	1	00-7F	NOTE LIMIT LOW	C-2...G8	00	○	○	×	×	○	×	○	×	×
		10	1	00-7F	NOTE LIMIT HIGH	C-2...G8	7F	○	○	×	×	○	×	○	×	×
		11	1	00-7F	DRY LEVEL	0...127	7F	○	○	×	×	○	×	○	○	×
		12	1	00-7F	CHORUS SEND	0...127	00	○	○	×	×	○	×	○	○	×
		13	1	00-7F	REVERB SEND	0...127	28	○	○	×	×	○	×	○	○	×
		14	1	00-7F	VARIATION SEND	0...127	00	○	○	×	×	○	×	○	○	×
		15	1	00-7F	VIBRATO RATE	-64...0...+63	40	○	○	×	×	○	×	○	○	×
		16	1	00-7F	VIBRATO DEPTH	-64...0...+63	40	○	○	×	×	○	×	○	○	×
		17	1	00-7F	VIBRATO DELAY	-64...0...+63	40	○	○	×	×	○	×	○	○	×
		18	1	00-7F	FILTER CUTOFF FREQUENCY	-64...0...+63	40	○	○	×	×	○	×	○	○	×
		19	1	00-7F	FILTER RESONANCE	-64...0...+63	40	○	○	×	×	○	×	○	○	×
		1A	1	00-7F	EG ATTACK TIME	-64...0...+63	40	○	○	×	×	○	×	○	○	×
		1B	1	00-7F	EG DECAY TIME	-64...0...+63	40	○	○	×	×	○	×	○	○	×
		1C	1	00-7F	EG RELEASE TIME	-64...0...+63	40	○	○	×	×	○	×	○	○	×
		1D	1	28-58	MW PITCH CONTROL	-24...0...+24 [semitones]	40	○	○	×	×	○	×	○	×	×
		1E	1	00-7F	MW LOW PASS FILTER CONTROL	-9600...0...+9450 [cent]	40	○	○	×	×	○	×	○	×	×
		1F	1	00-7F	MW AMPLITUDE CONTROL	-100...0...+100 [%]	40	○	○	×	×	○	×	○	×	×
		20	1	00-7F	MW LFO PMOD DEPTH	0...127	0A	○	○	×	×	○	×	○	×	×
		21	1	00-7F	MW LFO FMOD DEPTH	0...127	00	○	○	×	×	○	×	○	×	×
		22	1	00-7F	MW LFO AMOD DEPTH	0...127	00	○	○	×	×	○	×	○	×	×
		23	1	28-58	BEND PITCH CONTROL	-24...0...+24 [semitones]	42	○	○	×	×	○	×	○	×	×
		24	1	00-7F	BEND LOW PASS FILTER CONTROL	-9600...0...+9450 [cent]	40	○	○	×	×	○	×	○	×	×
		25	1	00-7F	BEND AMPLITUDE CONTROL	-100...0...+100 [%]	40	○	○	×	×	○	×	○	×	×
		26	1	00-7F	BEND LFO PMOD DEPTH	0...127	00	○	○	×	×	○	×	○	×	×
		27	1	00-7F	BEND LFO FMOD DEPTH	0...127	00	○	○	×	×	○	×	○	×	×
		28	1	00-7F	BEND LFO AMOD DEPTH	0...127	00	○	○	×	×	○	×	○	×	×
TOTAL SIZE			29													
		30	1	00-01	Rcv PITCH BEND	OFF, ON	01	○	×	×	×	○	×	○	×	×
		31	1	00-01	Rcv CH AFTER TOUCH(CAT)	OFF, ON	01	○	×	×	×	○	×	○	×	×
		32	1	00-01	Rcv PROGRAM CHANGE	OFF, ON	01	○	×	×	×	○	×	○	×	×
		33	1	00-01	Rcv CONTROL CHANGE	OFF, ON	01	○	×	×	×	○	×	○	×	×
		34	1	00-01	Rcv POLY AFTER TOUCH(PAT)	OFF, ON	01	○	×	×	×	○	×	○	×	×
		35	1	00-01	Rcv NOTE MESSAGE	OFF, ON	01	○	×	×	×	○	×	○	×	×
		36	1	00-01	Rcv RPN	OFF, ON	01	○	×	×	×	○	×	○	×	×
		37	1	00-01	Rcv NRPN	OFF, ON	XGmode=01, GMmode=00	○	×	×	×	○	×	○	×	×
		38	1	00-01	Rcv MODULATION	OFF, ON	01	○	×	×	×	○	×	○	×	×
		39	1	00-01	Rcv VOLUME	OFF, ON	01	○	×	×	×	○	×	○	×	×
		3A	1	00-01	Rcv PAN	OFF, ON	01	○	×	×	×	○	×	○	×	×
		3B	1	00-01	Rcv EXPRESSION	OFF, ON	01	○	×	×	×	○	×	○	×	×
		3C	1	00-01	Rcv HOLD1	OFF, ON	01	○	×	×	×	○	×	○	×	×
		3D	1	00-01	Rcv PORTAMENTO	OFF, ON	01	○	×	×	×	○	×	○	×	×
		3E	1	00-01	Rcv SOSTENUTO	OFF, ON	01	○	×	×	×	○	×	○	×	×
		3F	1	00-01	Rcv SOFT PEDAL	OFF, ON	01	○	×	×	×	○	×	○	×	×
		40	1	00-01	Rcv BANK SELECT	OFF, ON	01	○	×	×	×	○	×	○	×	×
		41	1	00-7F	SCALE TUNING C	-63...0...+63 [cent]	40	○	○	×	○ (Other Setting)	○	×	○	×	○
		42	1	00-7F	SCALE TUNING C#	-63...0...+63 [cent]	40	○	○	×	○ (Other Setting)	○	×	○	×	○
		43	1	00-7F	SCALE TUNING D	-63...0...+63 [cent]	40	○	○	×	○ (Other Setting)	○	×	○	×	○
		44	1	00-7F	SCALE TUNING D#	-63...0...+63 [cent]	40	○	○	×	○ (Other Setting)	○	×	○	×	○
		45	1	00-7F	SCALE TUNING E	-63...0...+63 [cent]	40	○	○	×	○ (Other Setting)	○	×	○	×	○
		46	1	00-7F	SCALE TUNING F	-63...0...+63 [cent]	40	○	○	×	○ (Other Setting)	○	×	○	×	○
		47	1	00-7F	SCALE TUNING F#	-63...0...+63 [cent]	40	○	○	×	○ (Other Setting)	○	×	○	×	○
		48	1	00-7F	SCALE TUNING G	-63...0...+63 [cent]	40	○	○	×	○ (Other Setting)	○	×	○	×	○
		49	1	00-7F	SCALE TUNING G#	-63...0...+63 [cent]	40	○	○	×	○ (Other Setting)	○	×	○	×	○
		4A	1	00-7F	SCALE TUNING A	-63...0...+63 [cent]	40	○	○	×	○ (Other Setting)	○	×	○	×	○
		4B	1	00-7F	SCALE TUNING A#	-63...0...+63 [cent]	40	○	○	×	○ (Other Setting)	○	×	○	×	○
		4C	1	00-7F	SCALE TUNING B	-63...0...+63 [cent]	40	○	○	×	○ (Other Setting)	○	×	○	×	○
		4D	1	28-58	CAT PITCH CONTROL	-24...0...+24 [semitones]	40	○	○	×	×	○	×	○	×	×
		4E	1	00-7F	CAT LOW PASS FILTER CONTROL	-9600...0...+9450 [cent]	40	○	○	×	×	○	×	○	×	×
		4F	1	00-7F	CAT AMPLITUDE CONTROL	-100...0...+100 [%]	40	○	○	×	×	○	×	○	×	×
		50	1	00-7F	CAT LFO PMOD DEPTH	0...127	00	○	○	×	×	○	×	○	×	×
		51	1	00-7F	CAT LFO FMOD DEPTH	0...127	00	○	○	×	×	○	×	○	×	×
		52	1	00-7F	CAT LFO AMOD DEPTH	0...127	00	○	○	×	×	○	×	○	×	×
		53	1	28-58	PAT PITCH CONTROL	-24...0...+24 [semitones]	40	○	×	×	×	○	×	○	×	×
		54	1	00-7F	PAT LOW PASS FILTER CONTROL	-9600...0...+9450 [cent]	40	○	×	×	×	○	×	○	×	×

Address (H)			Size (H)	Data (H)	Parameter	Description	XG Default (H)	MIDI Reception (effective or not for each part)			MIDI Transmission (generated data)			PLAY		REC
								Song	Main Layer Left Left-Layer	Keyboard	Panel (main generation method)	Song	Midi	PLAY	REW	Recorded from panel
		55	1	00-7F	PAT AMPLITUDE CONTROL	-100...0...+100 [%]	40	○	×	×	×	○	×	○	×	×
		56	1	00-7F	PAT LFO PMOD DEPTH	0...127	00	○	×	×	×	○	×	○	×	×
		57	1	00-7F	PAT LFO FMOD DEPTH	0...127	00	○	×	×	×	○	×	○	×	×
		58	1	00-7F	PAT LFO AMOD DEPTH	0...127	00	○	×	×	×	○	×	○	×	×
		59	1	00-5F	AC1 CONTROLLER NUMBER	0...95	10	○	×	×	×	○	×	○	×	×
		5A	1	28-58	AC1 PITCH CONTROL	-24...0...+24 [semitones]	40	○	×	×	×	○	×	○	×	×
		5B	1	00-7F	AC1 LOW PASS FILTER CONTROL	-9600...0...+9450 [cent]	40	○	×	×	×	○	×	○	×	×
		5C	1	00-7F	AC1 AMPLITUDE CONTROL	-100...0...+100 [%]	40	○	×	×	×	○	×	○	×	×
		5D	1	00-7F	AC1 LFO PMOD DEPTH	0...127	00	○	×	×	×	○	×	○	×	×
		5E	1	00-7F	AC1 LFO FMOD DEPTH	0...127	00	○	×	×	×	○	×	○	×	×
		5F	1	00-7F	AC1 LFO AMOD DEPTH	0...127	00	○	×	×	×	○	×	○	×	×
		60	1	00-5F	AC2 CONTROLLER NUMBER	0...95	11	○	×	×	×	○	×	○	×	×
		61	1	28-58	AC2 PITCH CONTROL	-24...0...+24 [semitones]	40	○	×	×	×	○	×	○	×	×
		62	1	00-7F	AC2 LOW PASS FILTER CONTROL	-9600...0...+9450 [cent]	40	○	×	×	×	○	×	○	×	×
		63	1	00-7F	AC2 AMPLITUDE CONTROL	-100...0...+100 [%]	40	○	×	×	×	○	×	○	×	×
		64	1	00-7F	AC2 LFO PMOD DEPTH	0...127	00	○	×	×	×	○	×	○	×	×
		65	1	00-7F	AC2 LFO FMOD DEPTH	0...127	00	○	×	×	×	○	×	○	×	×
		66	1	00-7F	AC2 LFO AMOD DEPTH	0...127	00	○	×	×	×	○	×	○	×	×
		67	1	00-01	PORTAMENTO SWITCH	OFF, ON	00	○	○	×	×	○	×	○	○	×
		68	1	00-7F	PORTAMENTO TIME	0...127	00	○	○	×	×	○	×	○	○	×
		69	1	00-7F	PITCH EG INITIAL LEVEL	-64...0...+63	40	○	×	×	×	○	×	○	×	×
		6A	1	00-7F	PITCH EG ATTACK TIME	-64...0...+63	40	○	×	×	×	○	×	○	×	×
		6B	1	00-7F	PITCH EG RELEASE LEVEL	-64...0...+63	40	○	×	×	×	○	×	○	×	×
		6C	1	00-7F	PITCH EG RELEASE TIME	-64...0...+63	40	○	×	×	×	○	×	○	×	×
		6D	1	01-7F	VELOCITY LIMIT LOW	1...127	01	○	×	×	×	○	×	○	×	×
		6E	1	01-7F	VELOCITY LIMIT HIGH	1...127	7F	○	×	×	×	○	×	○	×	×
TOTAL SIZE			3F													
		70	1		NOT USED		–	–	–	–	–	–	–	–	–	–
		71	1		NOT USED		–	–	–	–	–	–	–	–	–	–
		72	1	00-7F	EQ BASS GAIN	-12dB...+12dB	40	○	○	×	○ (Voice Setting)	○	×	○	○	○
		73	1	00-7F	EQ TREBLE GAIN	-12dB...+12dB	40	○	○	×	○ (Voice Setting)	○	×	○	○	○
TOTAL SIZE			04													
		74	1		NOT USED		–	–	–	–	–	–	–	–	–	–
		75	1		NOT USED		–	–	–	–	–	–	–	–	–	–
		76	1	04-28	EQ BASS FREQUENCY	32...2.0k [Hz]	0C	○	○	×	○ (Voice Setting)	○	×	○	○	○
		77	1	1C-3A	EQ TREBLE FREQUENCY	500...16.0k [Hz]	36	○	○	×	○ (Voice Setting)	○	×	○	○	○
		78	1		NOT USED		–	–	–	–	–	–	–	–	–	–
		79	1		NOT USED		–	–	–	–	–	–	–	–	–	–
		7A	1		NOT USED		–	–	–	–	–	–	–	–	–	–
		7B	1		NOT USED		–	–	–	–	–	–	–	–	–	–
		7C	1		NOT USED		–	–	–	–	–	–	–	–	–	–
		7D	1		NOT USED		–	–	–	–	–	–	–	–	–	–
		7E	1		NOT USED		–	–	–	–	–	–	–	–	–	–
		7F	1		NOT USED		–	–	–	–	–	–	–	–	–	–
TOTAL SIZE			0C													

nn = PART NUMBER

If there is a Drum Voice assigned to the part, the following parameters are ineffective.

- BANK SELECT LSB
- MONO/POLY MODE
- SCALE TUNING
- PORTAMENTO
- PITCH EG
- FILTER MODULATION DEPTH (FMOD DEPTH)
- AMPLITUDE MODULATION DEPTH (AMOD DEPTH)

MIDI Parameter Change table (DRUM SETUP)

Address (H)			Size (H)	Data (H)	Parameter	Description	XG Default (H)	MIDI Reception (effective or not for each part)			MIDI Transmission (generated data)			PLAY		REC
								Song	Main Layer Left Left-Layer	Keyboard	Panel (main generation method)	Song	Midi	PLAY	REW	Recorded from panel
3n	rr	00	1	00-7F	PITCH COARSE	-64...0...+63	40	○	×	×	×	○	×	○	×	×
		01	1	00-7F	PITCH FINE	-64...0...+63 [cent]	40	○	×	×	×	○	×	○	×	×
		02	1	00-7F	LEVEL	0...127	Depends on the note	○	×	×	×	○	×	○	×	×
		03	1	00-7F	ALTERNATE GROUP	OFF, 1...127	Depends on the note	○	×	×	×	○	×	○	×	×
		04	1	00-7F	PAN	RND, L63...C...R63	Depends on the note	○	×	×	×	○	×	○	×	×
		05	1	00-7F	REVERB SEND	0...127	Depends on the note	○	×	×	×	○	×	○	×	×
		06	1	00-7F	CHORUS SEND	0...127	Depends on the note	○	×	×	×	○	×	○	×	×
		07	1	00-7F	VARIATION SEND	0...127	7F	○	×	×	×	○	×	○	×	×
		08	1	00-01	KEY ASSIGN	SINGLE, MULTI	00	○	×	×	×	○	×	○	×	×
		09	1	00-01	Rcv NOTE OFF	OFF, ON	Depends on the note	○	×	×	×	○	×	○	×	×
		0A	1	00-01	Rcv NOTE ON	OFF, ON	01	○	×	×	×	○	×	○	×	×
		0B	1	00-7F	LOW PASS FILTER CUTOFF FREQUENCY	-64...0...+63	40	○	×	×	×	○	×	○	×	×
		0C	1	00-7F	LOW PASS FILTER RESONANCE	-64...0...+63	40	○	×	×	×	○	×	○	×	×
		0D	1	00-7F	EG ATTACK RATE	-64...0...+63	40	○	×	×	×	○	×	○	×	×
		0E	1	00-7F	EG DECAY1 RATE	-64...0...+63	40	○	×	×	×	○	×	○	×	×
		0F	1	00-7F	EG DECAY2 RATE	-64...0...+63	40	○	×	×	×	○	×	○	×	×
TOTAL SIZE			10													
		20	1	00-7F	EQ BASS GAIN	-12...+12 [dB]	40	○	×	×	×	○	×	○	×	×
		21	1	00-7F	EQ TREBLE GAIN	-12...+12 [dB]	40	○	×	×	×	○	×	○	×	×
		22	1		NOT USED		–	–	–	–	–	–	–	–	–	–
		23	1		NOT USED		–	–	–	–	–	–	–	–	–	–
		24	1	04-28	EQ BASS FREQUENCY	32...2.0k [Hz]	0C	○	×	×	×	○	×	○	×	×
		25	1	1C-3A	EQ TREBLE FREQUENCY	500...16.0k [Hz]	36	○	×	×	×	○	×	○	×	×
		26	1		NOT USED		–	–	–	–	–	–	–	–	–	–
		27	1		NOT USED		–	–	–	–	–	–	–	–	–	–
		28	1		NOT USED		–	–	–	–	–	–	–	–	–	–
		29	1		NOT USED		–	–	–	–	–	–	–	–	–	–
		2A	1		NOT USED		–	–	–	–	–	–	–	–	–	–
		2B	1		NOT USED		–	–	–	–	–	–	–	–	–	–
		2C	1		NOT USED		–	–	–	–	–	–	–	–	–	–
		2D	1		NOT USED		–	–	–	–	–	–	–	–	–	–
TOTAL SIZE			0E													

n: Drum Setup Number (0-1)
rr: note number (0D-5B)
In the following cases, the Clavinova will initialize all Drum Setups.
XG SYSTEM ON received
GM SYSTEM ON received
DRUM SETUP RESET received (only when in XG mode)

- When a part to which a Drum Setup is assigned receives a program change, the assigned Drum Setup will be initialized.
  If the same Drum Setup is assigned to two or more parts, changes in Drum Setup parameters (including program changes) will apply to all parts to which it is assigned.

System Exclusive Messages (1)

* Not Received when Receive Parameter SysEx is set to off.
* Not transmitted when Transmit Parameter SysEx is set to on.

System Exclusive Messages (Universal Realtime messages)

○: available

MIDI Event	Data Format			MIDI Reception (effective or not for each part)			MIDI Reception (affecting the panel)	MIDI Transmission (generated data)			PLAY		REC
				Song	Main Layer Left Left-Layer	Keyboard		Panel (main generation method)	Song	Midi	PLAY	REW	Recorded from panel
Master Volume	F0 7F XN 04 01 SS TT F7			○	×	×	×	×	× (Output as XG Master Volume)	×	○	○	×
	11110000	F0	= Exclusive status										
	01111111	7F	= Universal Real Time										
	0xxxnnnn	XN	= When N is received N=0-F,whichever is received. X=ignored										
	00000100	04	= Sub-ID #1=Device Control Message										
	00000001	01	= Sub-ID #2=Master Volume										
	0sssssss	SS	= Volume LSB										
	0ttttttt	TT	= Volume MSB										
	11110111	F7	= End of Exclusive										

System Exclusive Messages (Universal Non Realtime messages)

MIDI Event	Data Format			MIDI Reception (effective or not for each part)			MIDI Reception (affecting the panel)	MIDI Transmission (generated data)			PLAY		REC
				Song	Main Layer Left Left-Layer	Keyboard		Panel (main generation method)	Song	Midi	PLAY	REW	Recorded from panel
GM1 System On	F0 7E XN 09 01 F7			○	×	×	○ (Voice Setting Reverb Type Chorus Type)	×	○	×	○	×	○
	11110000	F0	= Exclusive status										
	01111110	7E	= Universal Non-Real Time										
	0xxxnnnn	XN	= When N is received N=0-F,whichever is received. X=ignored										
	00001001	09	= Sub-ID #1=General MIDI Message										
	00000001	01	= Sub-ID #2=General MIDI On										
	11110111	F7	= End of Exclusive										

System Exclusive Messages (2)

* Not received when the Receive Parameter SysEx is set to off.
* Not transmitted when the Transmit Parameter SysEx is set to on.

System Exclusive Messages (Preset voice)

MIDI Event	Data Format	MIDI Reception (effective or not for each part)			MIDI Reception (affecting the panel)	MIDI Transmission (generated data)		
		Song	Main Layer Left Left-Layer	Keyboard		Panel (main generation method)	Song	Midi
String Resonance Depth	F0 43 73 01 50 11 0n 02 dd F7 11110000 F0 = Exclusive status 01000011 43 = YAMAHA ID 01110011 73 = Clavinova ID 00000001 01 = Model ID (Clavinova common ID) 01010000 50 = SubID 00010001 11 = SubID 0000nnnn 0n = Channel (00–0F) 00000010 02 = SubID(String Resonance Depth) 0ddddddd dd = Depth(00–48) 11110111 F7 = End of Exclusive	○	○	×	○ (Other Setting)	○ (Other Setting)	○	×
Sustain Sample Depth	F0 43 73 01 50 11 0n 03 dd F7 11110000 F0 = Exclusive status 01000011 43 = YAMAHA ID 01110011 73 = Clavinova ID 00000001 01 = Model ID (Clavinova common ID) 01010000 50 = SubID 00010001 11 = SubID 0000nnnn 0n = Channel (00–0F) 00000011 03 = SubID(Sustain Sample Depth) 0ddddddd dd = Depth(00–48) 11110111 F7 = End of Exclusive	○	○	×	○ (Other Setting)	○ (Other Setting)	○	×
Key Off Sampling Depth	F0 43 73 01 50 11 0n 04 dd F7 11110000 F0 = Exclusive status 01000011 43 = YAMAHA ID 01110011 73 = Clavinova ID 00000001 01 = Model ID (Clavinova common ID) 01010000 50 = SubID 00010001 11 = SubID 0000nnnn 0n = Channel (00–0F) 00000100 04 = SubID(Key Off Sampling Depth) 0ddddddd dd = Depth(00–50) 11110111 F7 = End of Exclusive	○	○	×	○ (Other Setting)	○ (Other Setting)	○	×
Soft Pedal Depth	F0 43 73 01 50 11 0n 05 dd F7 11110000 F0 = Exclusive status 01000011 43 = YAMAHA ID 01110011 73 = Clavinova ID 00000001 01 = Model ID (Clavinova common ID) 01010000 50 = SubID 00010001 11 = SubID 0000nnnn 0n = Channel (00–0F) 00000101 05 = SubID(Soft Pedal Depth) 0ddddddd dd = Depth(00–7F) 11110111 F7 = End of Exclusive	○	○	×	○ (Other Setting)	○ (Other Setting)	○	×

* For each Depth value, the reset value is 40H = voice parameter.

System Exclusive Messages (Others)

MIDI Event	Data Format	MIDI Reception (effective or not for each part)			MIDI Reception (affecting the panel)	MIDI Transmission (generated data)		
		Song	Main Layer Left Left-Layer	Keyboard		Panel (main generation method)	Song	Midi
MIDI Master Tuning	F0 43 1n 27 30 00 00 mm ll cc F7 11110000 F0 = Exclusive status 01000011 43 = YAMAHA ID 0001nnnn 1n n= always 0(when transmit), n=0-F(when receive) 00100111 27 = Model ID of TG100 00110000 30 = Address High 00000000 00 = Address Mid 00000000 00 = Address Low 0000mmmm 0m = Master Tune MSB 0000llll 0l = Master Tune LSB 0ccccccc cc = don't care 11110111 F7 = End of Exclusive		○		○ (Other Setting)	×	○	×

Clavinova®

CLP-175

PARTS LIST

■ CONTENTS

OVERALL ASSEMBLY **2**
MAIN UNIT **3**
PANEL ASSEMBLY **10**
MUSIC REST ASSEMBLY **13**
TOP BOARD (S) ASSEMBLY **14**
TOP BOARD (L) ASSEMBLY **16**
ARM ASSEMBLY L **17**
ARM ASSEMBLY R **18**
END BLOCK ASSEMBLY L **19**
END BLOCK ASSEMBLY R **19**
KEY COVER ASSEMBLY **20**
INNER BOARD ASSEMBLY **21**
SPEAKER BOX ASSEMBLY **22**
FDD UNIT **24**
DM ASSEMBLY **25**
HEADPHONES JACK UNIT **25**
JACK ASSEMBLY **26**
MA120B ASSEMBLY **27**
FU120LB ASSEMBLY **28**
MAF ASSEMBLY **29**
PEDAL BOX UNIT **30**
PEDAL ASSEMBLY **31**
FRONT KEYBED ASSEMBLY **32**
BENCH (BC-200PE) **36**
ELECTRICAL PARTS ..... **37 – 58**

Notes : DESTINATION ABBREVIATIONS

A : Australian model	M : South African model
B : British model	O : Chinese model
C : Canadian model	Q : South-east Asia model
D : German model	T : Taiwan model
E : European model	U : U.S.A. model
F : French model	V : General export model (110V)
H : North European model	W: General export model (220V)
I : Indonesian model	N,X: General export model
J : Japanese model	Y : Export model
K : Korean model	

■ WARNING

Components having special characteristics are marked ⚠ and must be replaced with parts having specification equal to those originally installed.

- The numbers “QTY” show quantities for each unit.
- The parts with “--” in “**PART NO.**” are not available as spare parts.
- This mark “ } ” in the REMARKS column means these parts are interchangeable.
- The second letter of the shaded ( ) part number is O, not zero.
- The second letter of the shaded ( ) part number is I, not one.

■ OVERALL ASSEMBLY

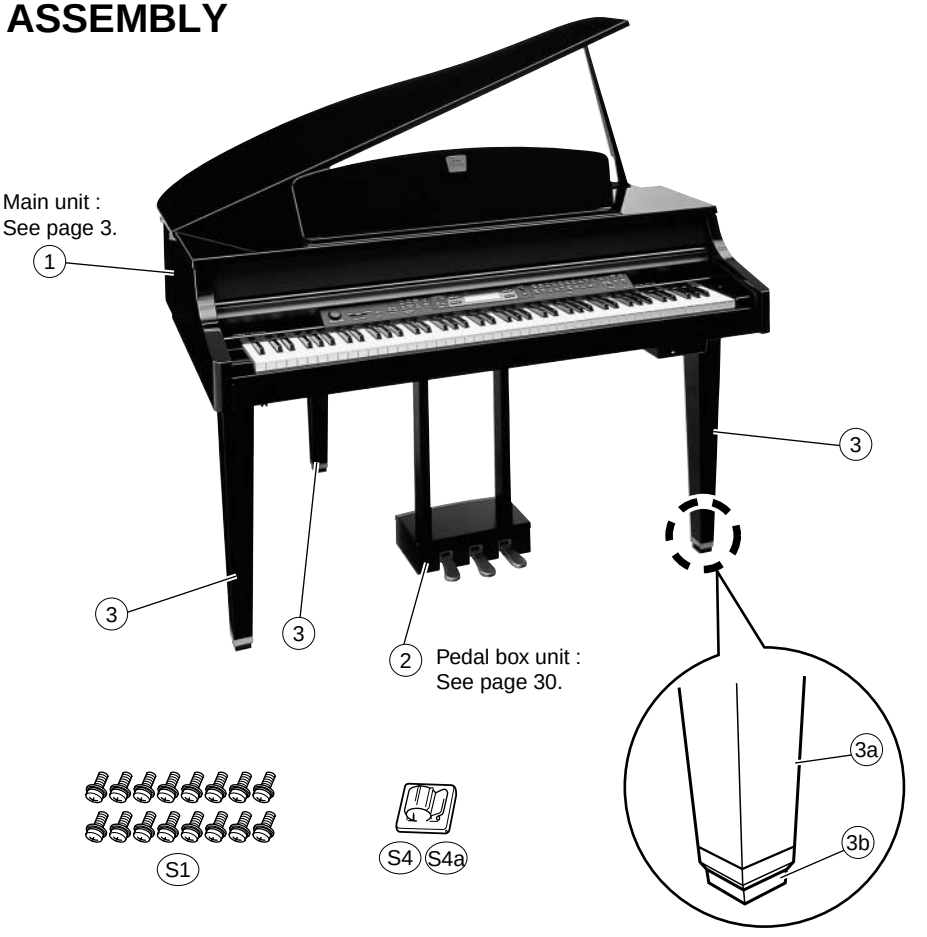

	REF NO.	PART NO.	DESCRIPTION			REMARKS	QTY	RANK
			OVERALL ASSEMBLY			CLP-175		
	1	--	Main Unit			U (WA48180)		
	1	--	Main Unit			E,B (WA48240)		
	2	--	Pedal Box Unit			(V909830)		
	3	**V9098700**	Leg Assembly				3	19
	3a	--	Leg			(V921540)	3	
	3b	**V9215800**	Leg Cap				3	08
			ACCESSORIES					
		WA298000	Screw Set	CL				
⚠		**VT015800**	AC Cord	U 2P 2.44m 7A		U		06
⚠		**V2917000**	AC Cord	UC 2P 2.44m 7A		U		06
⚠		**V3126400**	AC Cord	U 2P 2.5m 7A		U		06
⚠		**VT015900**	AC Cord	E 2P 2.5m		E		05
⚠		**V2917100**	AC Cord	E 2P 2.5m 2.5A		E		05
⚠		**V3126300**	AC Cord	E 2P 2.5m 2.5A		E		05
⚠		**VT016000**	AC Cord	B 2P 2.5m		B		08
⚠		**V3126500**	AC Cord	B 2P 2.5m		B		
		V2384100	Floppy Disk	3.50inch 2000K				03
		X2547A00	Floppy Disk	MUSIC DISK				04
		V7564400	Bench	BC-200PE		U		
*		**X4187A00**	CD-ROM	CDROM 74min 12cm				05
		V8740600	Headphone Hanger Set					07
		WA298000	Screw Set	CL				
	S1	**VP158800**	Pan Head Screw	SW 6.0X25 MFZN2BL			16	
	S4	--	Cord Clamp Set			(WA29790)		
	S4a	**VP592100**	Cord Clamper	DKN-5B (VHB)				03
			TOOLES					
		AAX24950	Capstan Screw Driver					
		TX920310	Grease	FLOIL G-92KB BLUE		100g		

*: New Parts

RANK: Japan only

■ MAIN UNIT

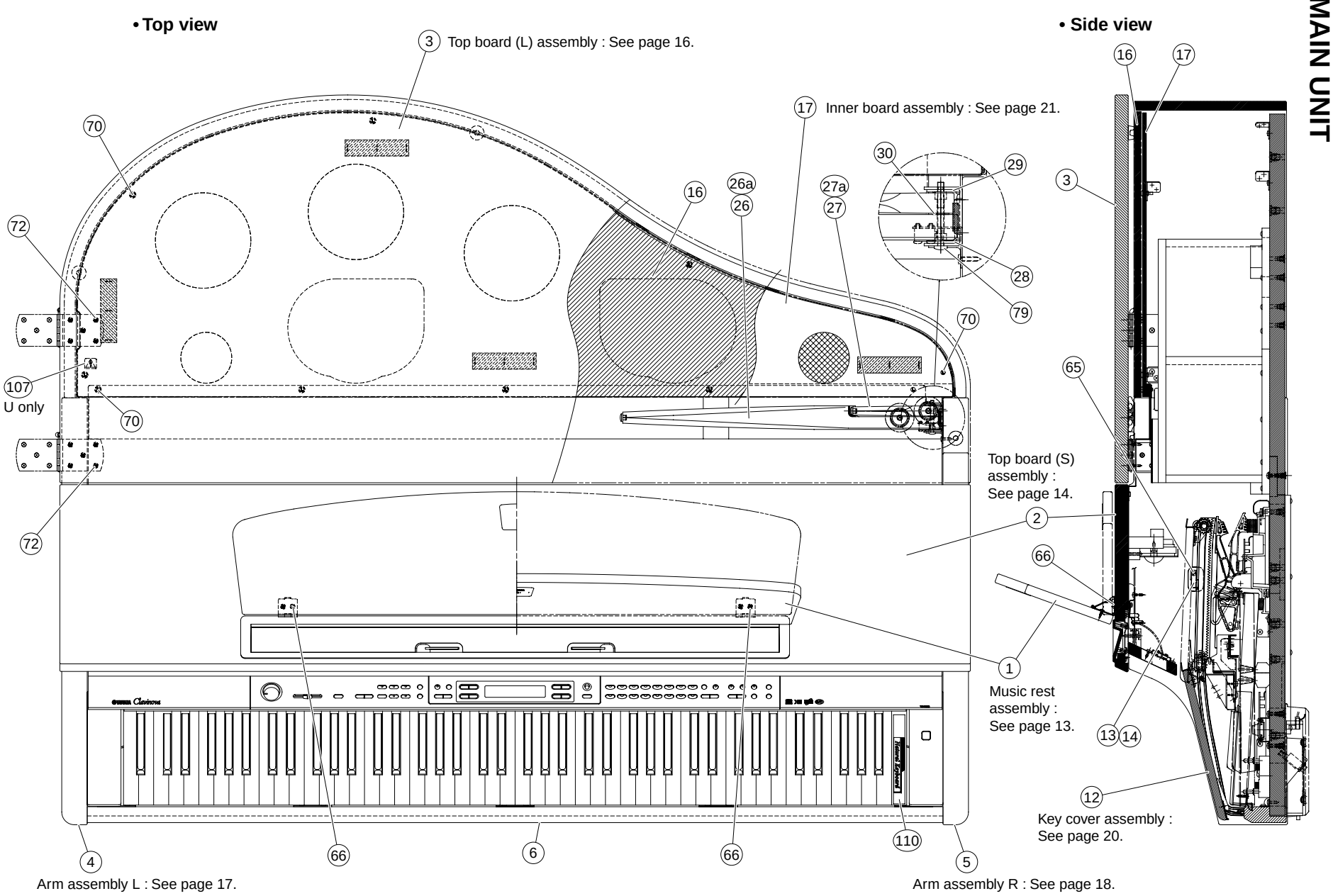
• Top view
• Side view
3 Top board (L) assembly : See page 16.
17 Inner board assembly : See page 21.
Top board (S) assembly : See page 14.
Music rest assembly : See page 13.
Key cover assembly : See page 20.
Arm assembly L : See page 17.
Arm assembly R : See page 18.
107 U only
1
2
3
4
5
6
12
13
14
16
17
26
26a
27
27a
28
29
30
65
66
70
72
79
110

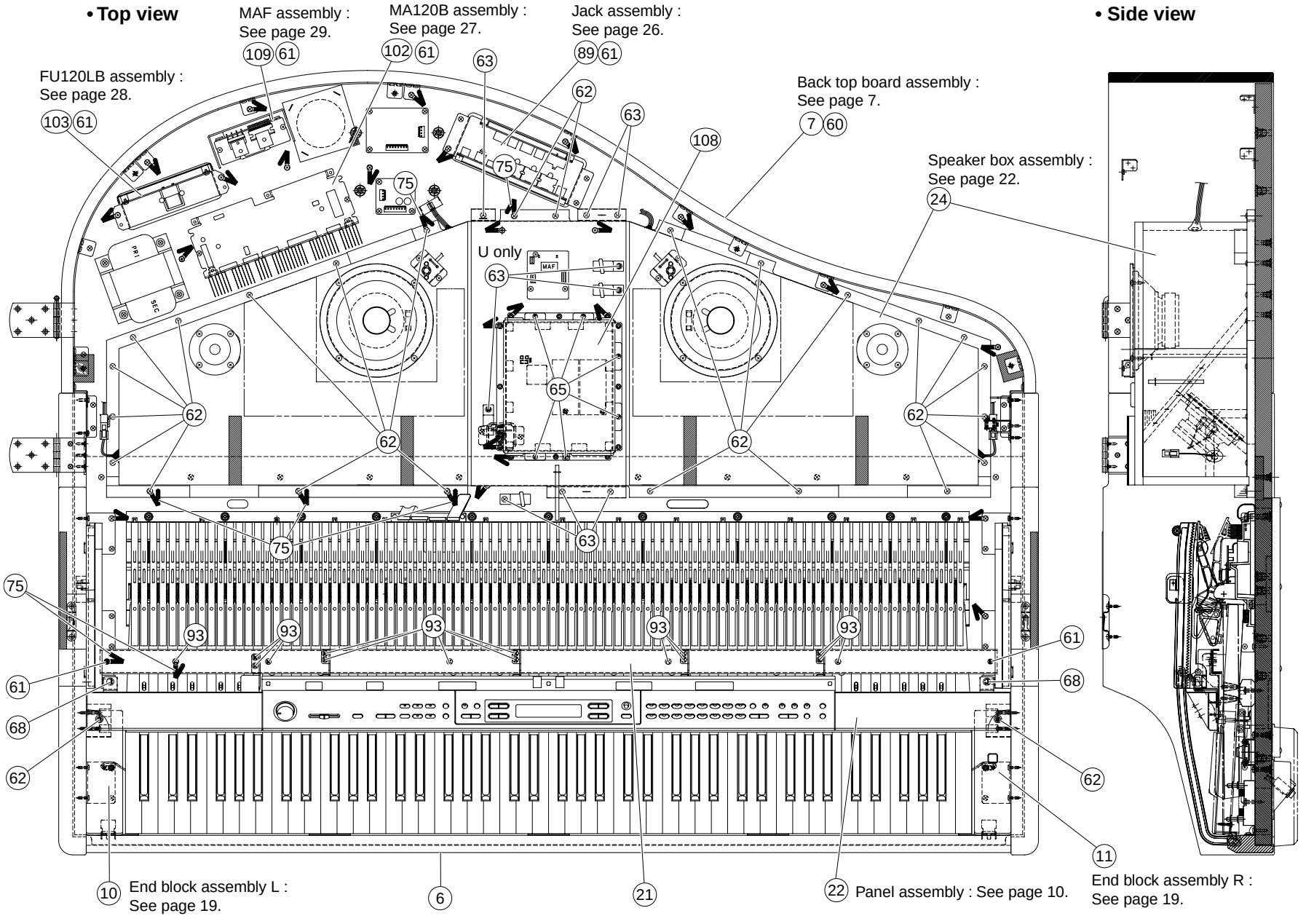
• Top view
MAF assembly : See page 29.
MA120B assembly : See page 27.
Jack assembly : See page 26.
FU120LB assembly : See page 28.
Back top board assembly : See page 7.
Speaker box assembly : See page 22.
• Side view
U only
End block assembly L : See page 19.
Panel assembly : See page 10.
End block assembly R : See page 19.

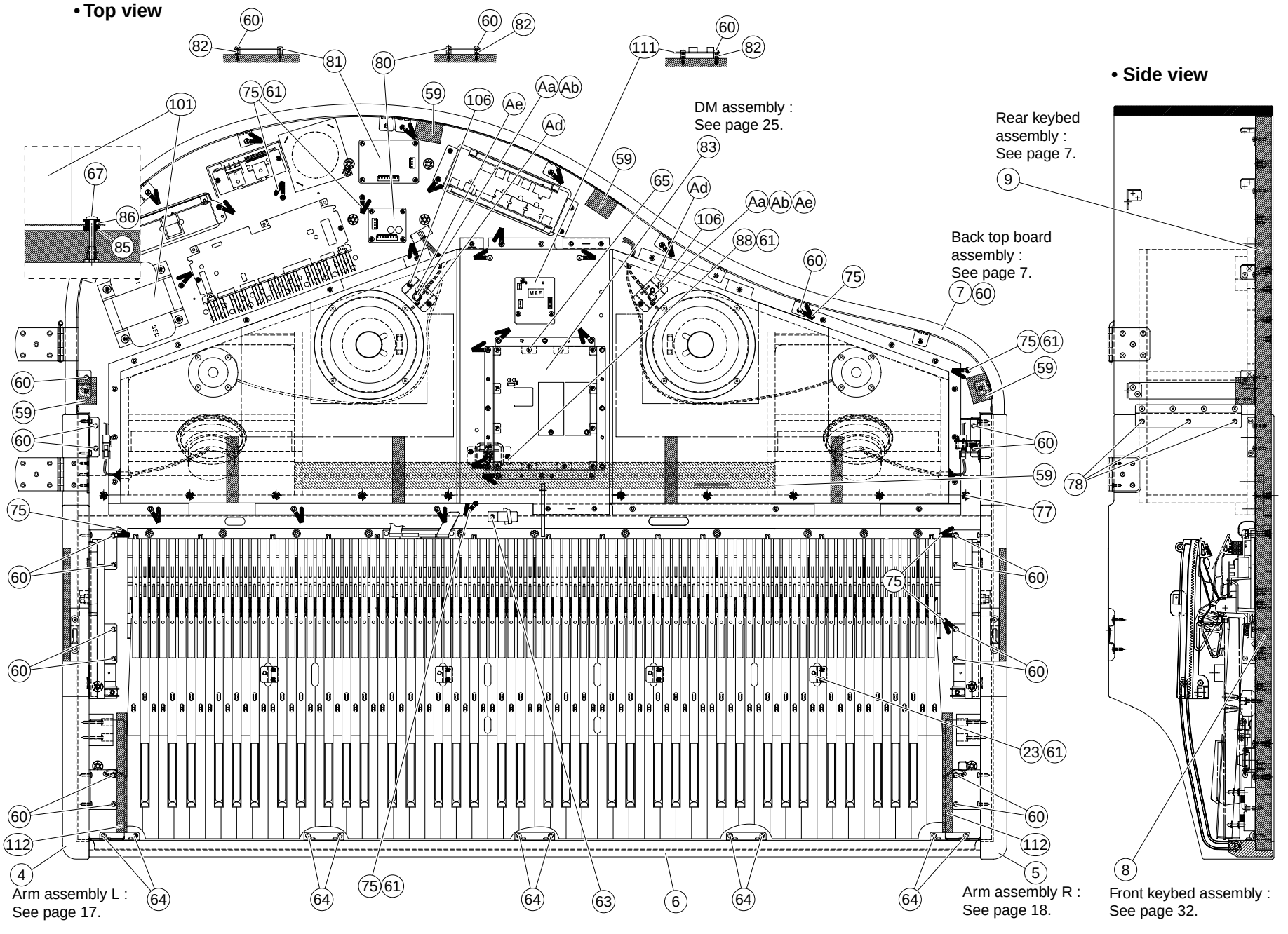
• Top view
• Side view
DM assembly :
See page 25.
Rear keybed
assembly :
See page 7.
Back top board
assembly :
See page 7.
Arm assembly L :
See page 17.
Arm assembly R :
See page 18.
Front keybed assembly :
See page 32.

• **Bottom view**

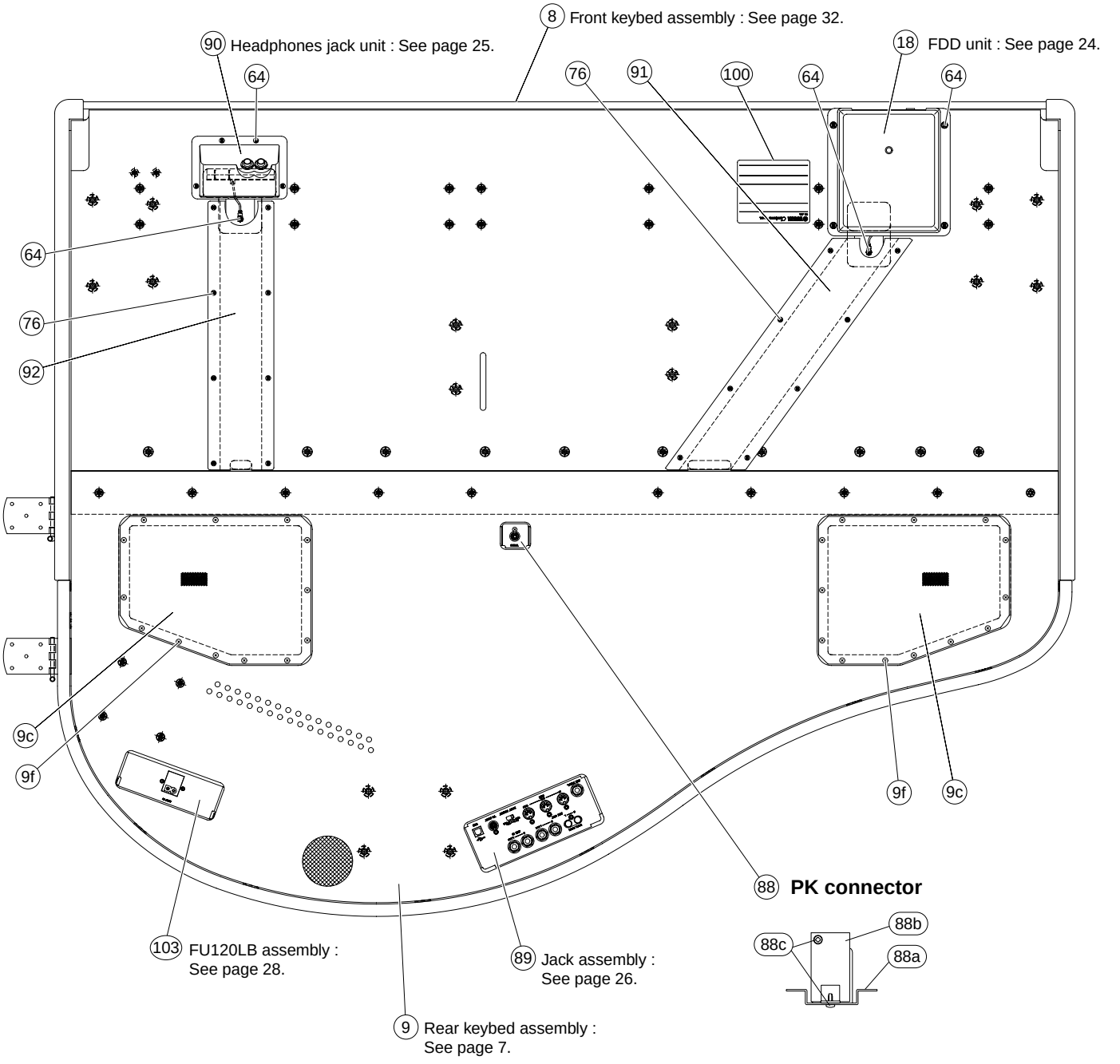
8 Front keybed assembly : See page 32.
90 Headphones jack unit : See page 25.
18 FDD unit : See page 24.
64
76
91
100
64
64
64
76
92
9c
9f
9f
9c
88 PK connector
88b
88c
88a
103 FU120LB assembly : See page 28.
89 Jack assembly : See page 26.
9 Rear keybed assembly : See page 7.

• **Back top board assembly**

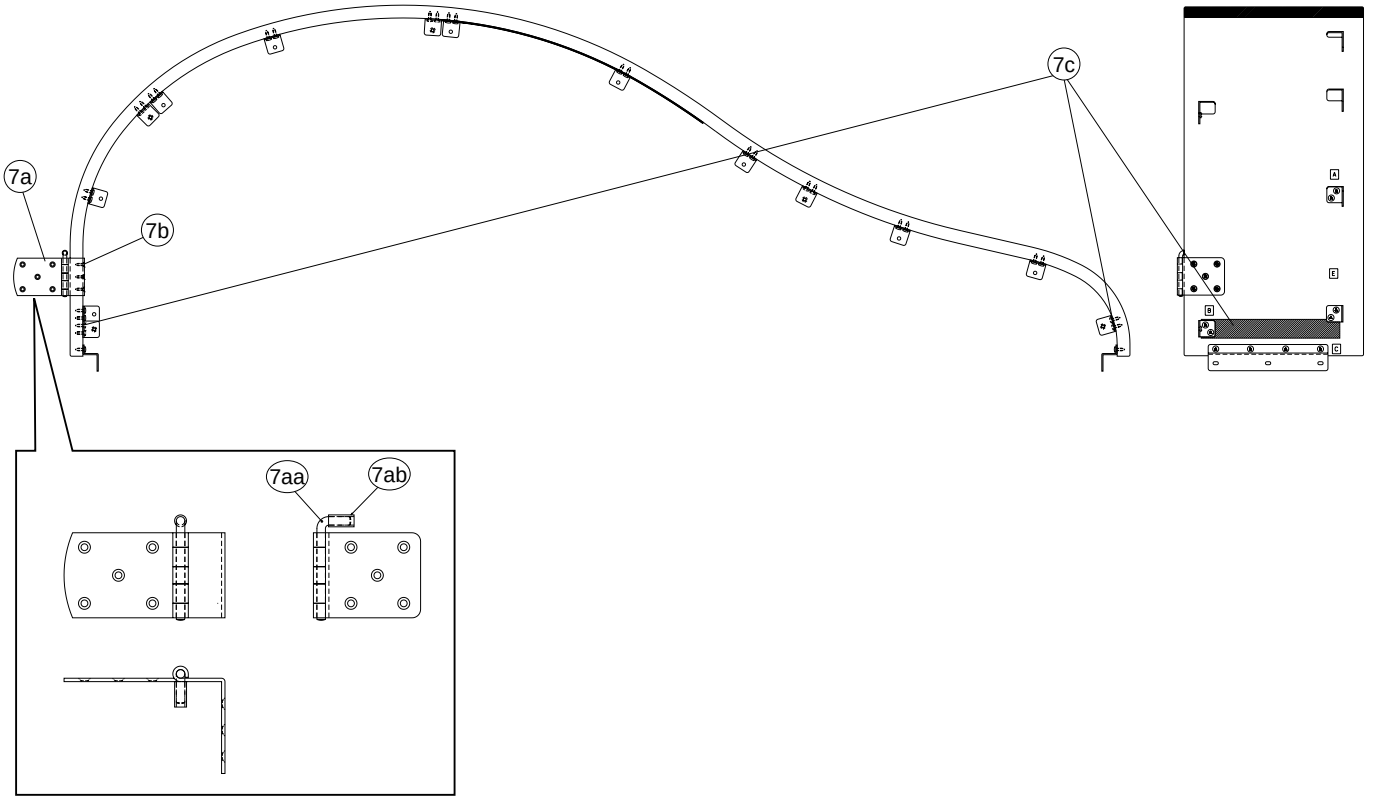

• **Rear keybed assembly**

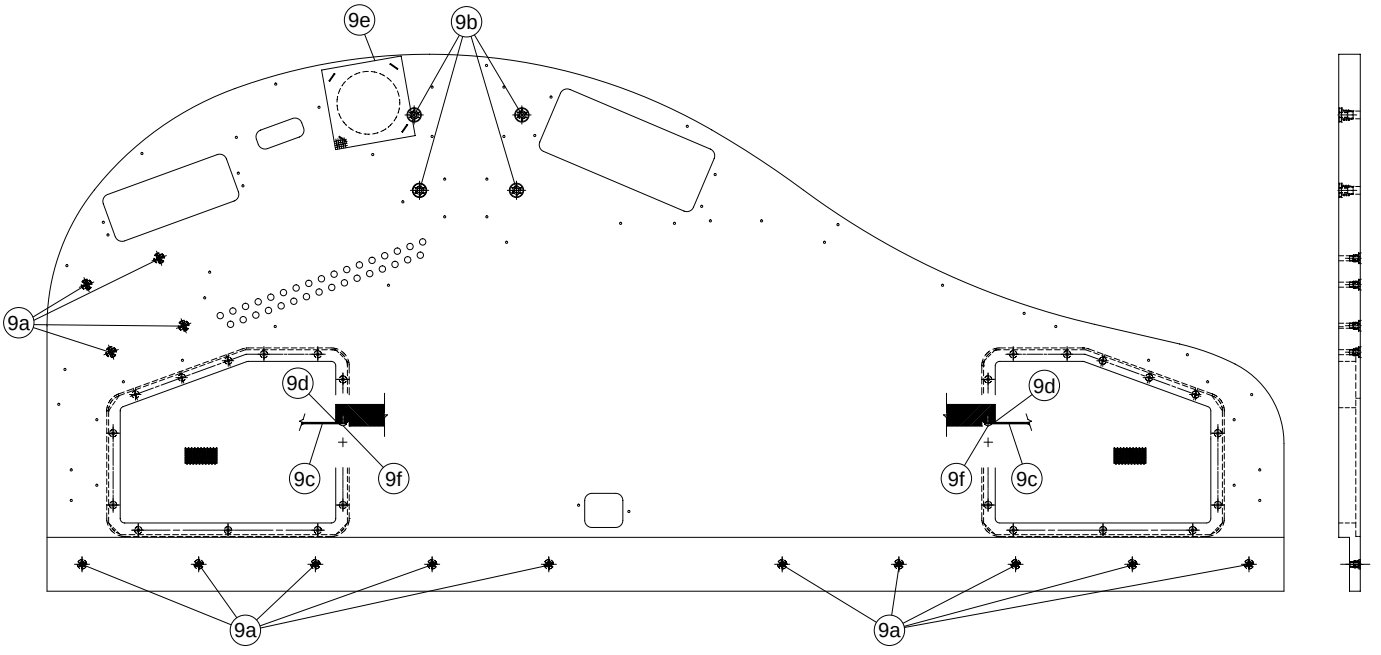

	REF NO.	PART NO.	DESCRIPTION			REMARKS		QTY	RANK
			MAIN UNIT			CLP-175			
		--	Main Unit			U	(WA48180)		
		--	Main Unit			E,B	(WA48240)		
		--	Connector Assembly	MAF-LF 5P950/7P300		U	(WB06180)		
		VD947800	Data Line Filter	ESD-R-25D-B		U			05
		--	Connector Assembly	AJK-LF 11P600		U	(WB78340)		
		VK102600	Connector Assembly	KRD-KRD 7P-200		E,B			05
		--	Connector Assembly	KRD-KRD11P-500		E,B	(VK11260)		
		--	Connector Assembly	KRD-KRD 5P-850		E,B	(VK12250)		
		--	Connector Assembly	DJK PH 8P-650		E,B	(WA69600)		
		--	Composite Common Parts				(WA48670)		
	63	EN630230	Truss Head Tapping Screw-1	3.5X14 MFZN2Y		U		9	01
	63	EN630230	Truss Head Tapping Screw-1	3.5X14 MFZN2Y		E,B		6	01
	89	--	Jack Assembly			U	(WB07050)		
	89	--	Jack Assembly			E,B	(WA75020)		
	100	--	Name Plate			U	(WA48680)		
	100	--	Name Plate			E,B	(WA48690)		
	102	V8595400	MA120B Assembly			U			19
	102	V8596000	MA120B Assembly			E,B			19
	103	V7631500	FU120LB Assembly			U			10
	103	V7631600	FU120LB Assembly			E,B			09
	107	VB951400	Graphic Mark	UL		U			03
	109	--	MAF Assembly			U	(WA74640)		
	109	--	MAF Assembly			E,B	(WA74650)		
		--	Composite Common Parts				(WA48670)		
		CB069250	Cord Holder	BK-1					01
		VP839100	Adhesive Tape	12X25				2	01
		--	Adhesive Tape	12X70			(V255510)	4	
		VK108200	Connector Assembly	KRD-KRD 9P-350					05
		VK110900	Connector Assembly	KRD-KRD 5P-450					03
		--	Connector Assembly	KRD-KRD 3P-500			(VK11200)		
		--	Connector Assembly	NW VH 4P			(V875910)		
		--	Connector Assembly	HP-GND XH 2P			(V947370)		
		--	Connector Assembly	3B POWER XH 5P-800			(WA68210)		
		--	Connector Assembly	5F POWER XH 6P1800			(WA68220)		
*		WA688100	Connector Assembly	FDD 34P FLAT L=800					
		--	Connector Assembly	HP PH 7P-1600			(WB54340)		
	A	--	Connector Assembly	MIC4 PH 4P-220/370			(WB78370)		
	Aa	JE000270	Capacitor Microphone	WM-34C		AFC		2	03
	Ab	--	Holder Rubber	YMP-CH009			(V890340)	2	
	Ac	V8903400	Cord Holder	BK-1					01
	Ad	--	Angle Bracket,Mic				(V892700)	2	
	Ae	V9240700	Plastic Rivet	P3065B				4	
	1	V9380400	Music Rest Assembly						23
	2	--	Top Board (S) Assembly	SMALL			(WA67430)		
*	3	WB122800	Top Board (L) Assembly	LARGE					
*	4	WA674900	Arm Assembly L	LEFT					
*	5	WA675000	Arm Assembly R	RIGHT					
	6	V9100100	Front Rail Assembly						18
	7	V9099400	Back Top Board Assembly						38
	7a	V9134800	Hinge B						12
	7aa	WA032600	Hinge Shaft	SWP-A M5.0					
	7ab	WA032700	Tube Clear	PVC M5.0 t=1.0					
	7b	EM030110	Flat Head Tapping Screw-1	3.0X12 MFZN2Y				5	01
	7c	--	Electrical Adhesive Tape	TC-A40E 25X20m			(V409520)		
*	8	WA693000	Front Keybed Assembly						
*	9	WA693300	Rear Keybed Assembly						
	9a	VA789400	Nut	4X11.5 B MFZN2BL				14	01
	9b	22401100	Nut	6 X15.5 B MFZN2Y				4	01
*	9c	WA792100	Metal Net					2	
	9d	--	Cushion	780X13X1			(WA80580)	2	
	9e	V9645700	Metal Net	90X90					03
	9f	VV452700	Truss Head Tapping Screw	3.5X12 MFZN2BL				26	01
*	10	WA681400	End Block Assembly L	LEFT					
*	11	WA681500	End Block Assembly R	RIGHT					
*	12	WA686700	Key Cover Assembly						
	13	VS312100	Rack Cover L	LEFT					03
	14	VS312200	Rack Cover R	RIGHT					03
	15	--	Grease	FLOIL GP-327			(VG90050)		

*: New Parts

RANK: Japan only

	REF NO.	PART NO.	DESCRIPTION			REMARKS	QTY	RANK
	16	V9100700	Speaker Grille Assembly					16
	17	V9100800	Inner Board Assembly					36
	18	--	FDD Unit			(V706210)		
	21	--	Rail			(WA68070)		
	22	--	Panel Assembly			(WA68000)		
	23	--	Panel Stay G			(WA67650)	4	
	24	--	Speaker Box Assembly			(WA67640)		
*	26	WA880100	Top Board (Lid) Stay L	LONG				
	26a	V6175800	Cap					03
*	27	WA880200	Top Board (Lid) Stay S	SHORT				
	27a	V6175800	Cap					03
	28	VY941200	Bushing F	FRONT				03
	29	VY941300	Bushing R	REAR				03
	30	--	Cloth	15X6X1.8		(WB68720)		
	59	--	Electrical Adhesive Tape	AL-40 40X20m		(WA53090)		
	60	EP030470	Bind Head Tapping Screw-1	3.5X20 MFZN2Y			36	01
	61	EP030190	Bind Head Tapping Screw-1	3.5X16 MFZN2Y			26	01
	62	VA076400	Truss Head Tapping Screw-1	3.5X30 MFZN2Y			26	01
	64	EP030260	Bind Head Tapping Screw-1	3.5X16 MFZN2BL			20	01
	65	EP600250	Bind Head Tapping Screw-B	3.0X8 MFZN2Y			20	01
	66	EP030310	Bind Head Tapping Screw-1	3.0X16 MFZN2BL			4	01
	67	VT229100	Bind Head Screw	4.0X30 MFZN2BL			4	01
	68	EP600240	Bind Head Tapping Screw-B	4.0X10 MFZN2BL			2	01
	70	V6207400	Truss Head Screw	4.0X16 MFZN2BL			10	01
	72	V6295100	Oval Head Tapping Screw-1	3.0X14 BS			10	01
	75	CB817510	Cord Binder	S-14B			21	03
	76	EN630240	Truss Head Tapping Screw-1	3.5X20 MFZN2BL			16	01
*	77	WA847100	Flat Head Screw	4.0X20 MFZN2BL			10	
	78	WA051000	Hex. Head Tapping Screw-1	4.0X16 MFZN2Y			6	01
*	79	WB272400	Bind Head Screw	5.0X50 MFZN2Y				
	80	V7708200	Circuit Board	NET1				05
	81	V2455000	Circuit Board	NETWORK				11
	82	CB040950	Spacer				11	03
	83	--	DM Assembly			(WA74700)		
	85	VK431100	FDD Spacer				4	01
	85	VA121400	Spacer				4	02
	86	VA121600	Bushing				4	01
	88	--	PK Connector			(V879350)		
	88a	V7585400	Angle, PK Connector	BEIGE				05
	88b	V8496600	Circuit Board	PEDAL (DJK)				
	88c	EP600190	Bind Head Tapping Screw-B	3.0X8 MFZN2BL			2	01
	90	--	Headphones Jack Unit			(WA74990)		
*	91	WA855800	FD Wire Cover					
*	92	WA855700	HP Wire Cover					
	93	EG340080	Bind Head Screw	4.0X8 MFZN2Y			15	01
⚠	101	X2402A00	Power Transformer	IEC/EN60691 E UL/C				17
	106	EP030340	Bind Head Tapping Screw-1	3.5X12 MFZN2BL			4	01
	108	V7878100	DM Shield Cover Assembly					07
	110	--	Label, Natural Keyboard	E		(V763130)		
*	111	WA746300	Circuit Bord	MIC				
	112	--	Nonwoven Fabric Cloth	180X15X0.55		(V945750)	2	

*: New Parts

RANK: Japan only

Note: Refer to the CIRCUIT BOARD LAYOUT & WIRING section of this manual regarding connector assemblies and adhesive tapes.

■ PANEL ASSEMBLY

• Bottom view

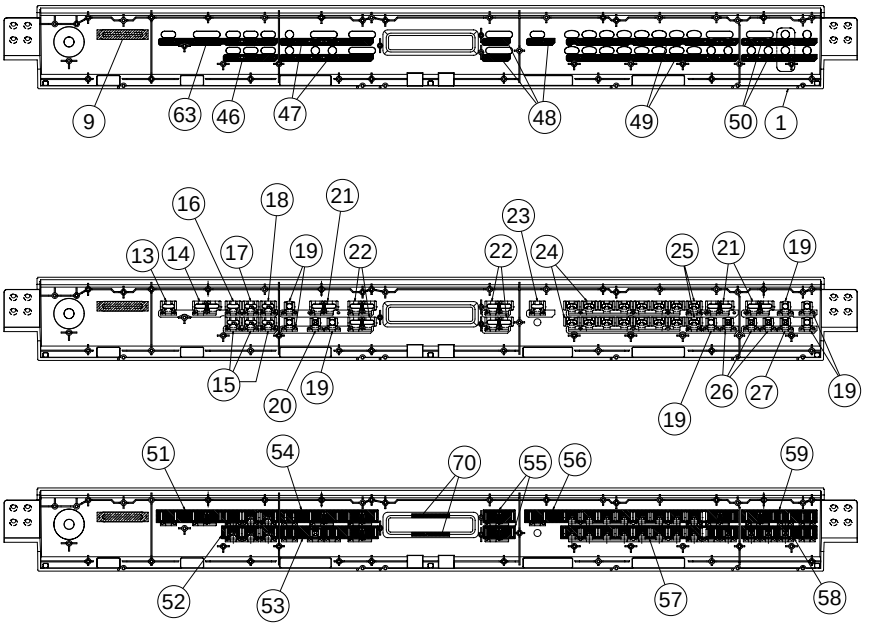

• Bottom view

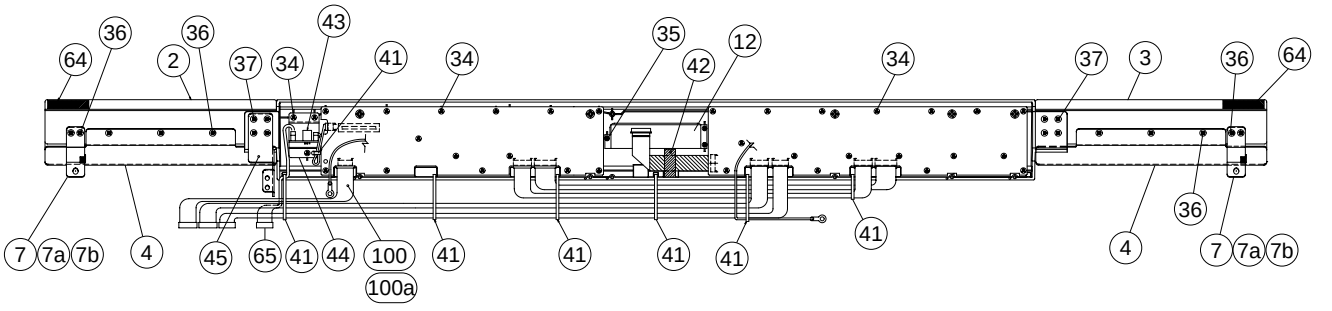

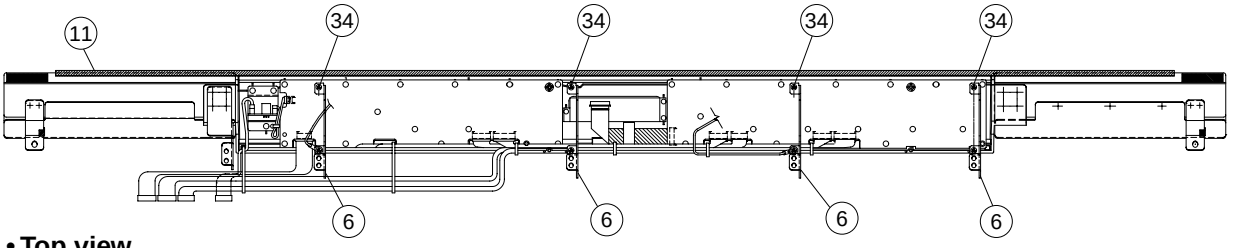

• Top view

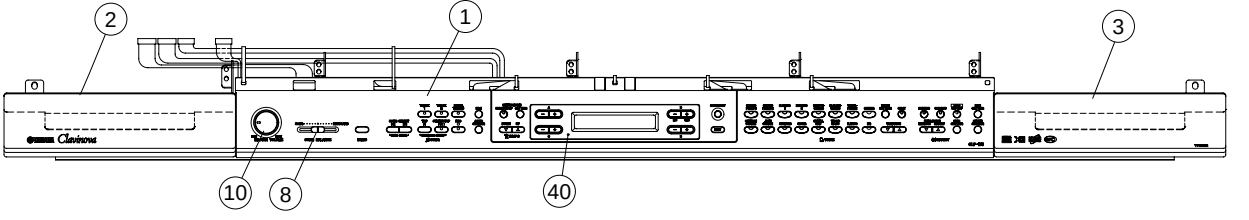

	REF NO.	PART NO.	DESCRIPTION			REMARKS	QTY	RANK
		--	PANEL ASSEMBLY			CLP-175 (WA68000)		
*	1	WA848400	Control Panel					
*	2	WB247100	Panel L	LEFT				
*	3	WB247200	Panel R	RIGHT				
*	4	WA848500	Grille				2	
*	6	WA690500	Panel Holder				4	
	7	--	Panel Holder			(V907460)	2	
	7a	V8577000	Control Panel Holder A					
	7b	V8044200	Felt Black	27X12X1				01
	8	V8085100	Slide Knob			SONG BALANCE		01
	9	V5911300	Dust Proof Cloth	54X10X0.25				01
	10	VU432400	Knob Black			MASTER VOLUME		01
	11	VU638700	Felt	MK				05
	12	V8811300	LCD	SCLCMDYAMS0049				14
	13	V8670000	Button Brown	B		DEMO		01
	14	V8064400	Button Gray	A1 x2		SONG SELECT		01
	15	V8065500	Button Dark Gray	B1 LENS		TRACK 1/2, EXTRA TRACKS	3	05
	16	V8065100	Button Dark Gray	B1		TOP		04
	17	V8670300	Button Green	B LENS(GREEN)		SONG START/STOP		01
	18	V8670200	Button Dark Gray	B LEND(RED)		REC		01
	19	V8066000	Button Dark Gray	D1		FILE, SETTING(SONG, AFC, METRONOME, MIDI, OTHER, VOICE)	7	04
	20	V8671400	Button Green	D LEND(GREEN)		METRONOME START/STOP		01
	21	V8064900	Button Gray	A1 x2		TEMPO, VARIATION	3	05
	22	V8671200	Button Gray	A1b x2		BRILLIANCE LCD A/B/C/D	4	01
	23	V8670700	Button Gray	B1a x1		EDIT		01
	24	V8065800	Button Dark Gray	C1 x7		GRAND PIANO 1/2, E.PIANO 1/2, HARPSICHORD, E.CLAVICHORD, VIBRAPHONE, CHURCH ORGAN, JAZZ ORGAN, STRINGS, CHOIR, E.BASS, WOOD BASS, SYNTH.PAD	2	06
	25	V8465000	Button Dark Gray	E x1		GUITAR, XG	2	01
	26	V8066100	Button Dark Gray	D1 LENS		SPRIT, REVERB, CHORUS	3	05
	27	V8670400	Button Blue	D LENS(BLUE)		AFC ON/OFF		01
	28	--	Connector Assembly	KRD-KRD 9P-1800		(VK13920)		
	29	--	Connector Assembly	KRD-KRD 8P-1900		(VK14060)		
	30	VK110000	Connector Assembly	KRD-KRD 11P-400				06
	31	VK109900	Connector Assembly	KRD-KRD 9P-400				03
	32	V9384800	FFC Cable	16P 110mm				03
	33	VK097200	Connector Assembly	KRD-KRD 3P-100				03
	34	EP600250	Bind Head Tapping Screw-B	3.0X8 MFZN2Y			42	01
	35	VD791000	Bind Head Tapping Screw-B	2.6X10 MFZN2Y			3	01
	36	EP030230	Bind Head Tapping Screw-1	3.5X10 MFZN2Y			10	01
	37	EP030340	Bind Head Tapping Screw-1	3.5X12 MFZN2BL			8	01
*	38	WB152200	Circuit Board	PNL				
*	39	WB151900	Circuit Board	PNR				
	40	V8345900	LCD Cover					07
	41	CB069250	Cord Holder	BK-1			7	01
	42	VP834600	Adhesive Tape	12X50				02
*	43	WB152000	Circuit Board	MV1				
	44	--	RV Stay	1.2		(V861300)		
	45	--	Control Panel Holder			(WB08490)		
	46	--	Nonwoven Fabric Cloth	11 57.4X7.5X0.5		(V889010)		
	47	--	Nonwoven Fabric Cloth	12 99X7.5X0.5		(V889020)	2	
	48	--	Nonwoven Fabric Cloth	13 30X7.5X0.5		(V889030)	3	
	49	--	Nonwoven Fabric Cloth	14 182X7.5X0.5		(V889040)	2	
	50	--	Nonwoven Fabric Cloth	15 80X7.5X0.5		(V889050)	2	
	51	--	Nonwoven Fabric Cloth	21 129.3X13.5X0.5		(V889060)		
	52	--	Nonwoven Fabric Cloth	22 60.3X13.5X0.5		(V889070)		
	53	--	Nonwoven Fabric Cloth	23 103.5X13.5X0.5		(V889080)		
	54	--	Nonwoven Fabric Cloth	24 103.5X13.5X0.5		(V889090)		
	55	--	Nonwoven Fabric Cloth	H		(V860690)	2	
	56	--	Nonwoven Fabric Cloth	25 226X13.5X0.5		(V889100)		
	57	--	Nonwoven Fabric Cloth	26 188X13.5X0.5		(V889110)		
	58	--	Nonwoven Fabric Cloth	27 80X13.5X0.5		(V889120)		
	59	--	Nonwoven Fabric Cloth	28 80X13.5X0.5		(V889130)		
	63	--	Nonwoven Fabric Cloth	16 126X7.5X0.5		(V889140)		

*: New Parts

RANK: Japan only

REF NO.	PART NO.	DESCRIPTION			REMARKS	QTY	RANK
64	--	Nonwoven Fablic Cloth	10X50X0.55		(V243310)	2	
65	--	Connector Assembly	MV PH 8P-1850		(WA69550)		
70	--	Nonwoven Fablic Cloth	30X4XT0.35		(WA04070)	2	
100	--	Connector Assembly	EBUS-LF KRD 7P		(WA68510)		
100a	**VD947800**	Data Line Filter	ESD-R-25D-B				05

∗: New Parts

RANK: Japan only

■ MUSIC REST ASSEMBLY

• **Rear view**

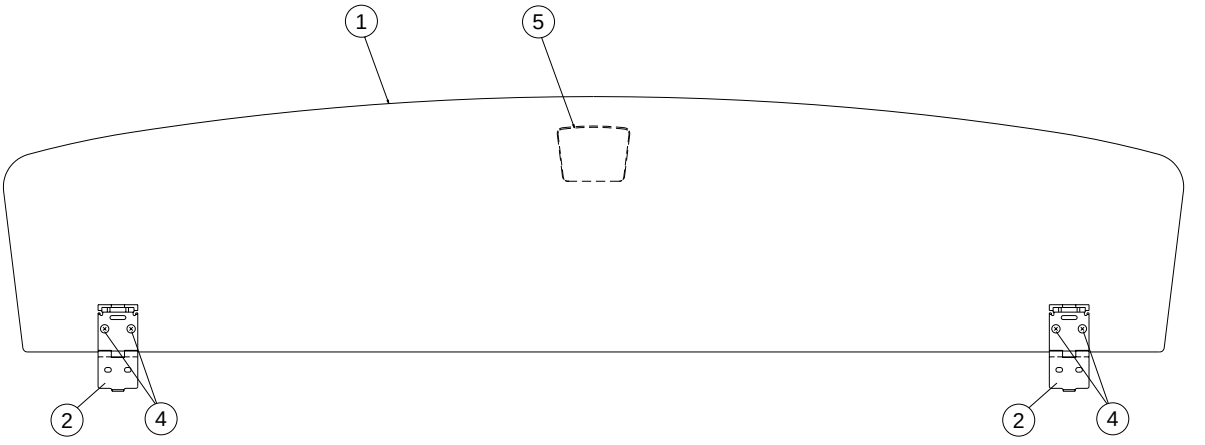

• **Side view**

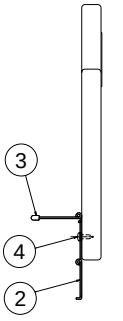

REF NO.	PART NO.	DESCRIPTION			REMARKS	QTY	RANK
	V9380400	MUSIC REST ASSEMBLY			CLP-175		23
1	**--**	Music Rest			(V938060)		
2	**V8437600**	Hinge	1STEP 1.6mm YMMA			2	05
3	**VV965900**	Cap	T=1.6mm			2	03
4	**20404200**	Bind Head Tapping Screw-1	3.0X10 MFZN2BL			4	
5	**V5782300**	Badge	BRASS				05

∗: New Parts

RANK: Japan only

■ TOP BOARD (S) ASSEMBLY

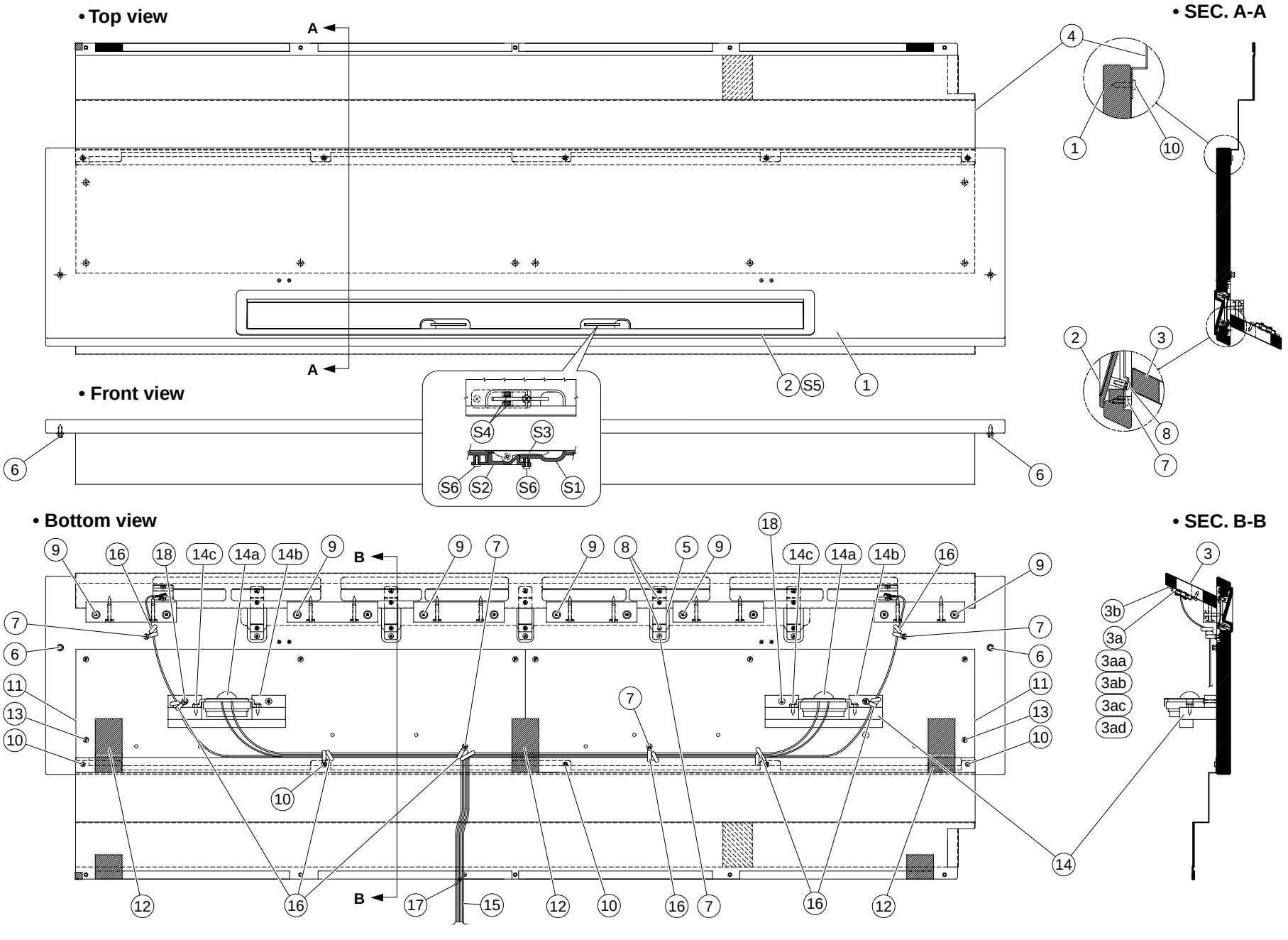

	REF NO.	PART NO.	DESCRIPTION			REMARKS	QTY	RANK
		--	TOP BOARD (S) ASSEMBLY	SMALL		CLP-175 (WA67430)		
*	1	WA675700	Top Board (S)	SMALL				
	2	V7082600	Score Support Assembly					23
*	3	WA691900	Top Front Rail					
	3a	--	Connector Assembly	MIC3 XH 4P-1350		(WA69590)		
	3aa	JE000270	Capacitor Microphone	WM-034C		AFC	2	03
	3ab	--	Holder Rubber	YMP-CH009		(V890340)	2	
	3ac	--	Angle Bracket, Mic.			(V892700)	2	
	3ad	V9240700	Plastic Rivet	P3065B			4	
	3b	EP030240	Bind Head Tapping Screw-1	3.5X12 MFZN2Y			4	01
*	4	WA849200	Support Bar Receive Angle					
	5	V7508600	Angle Bracket				5	01
	6	VV444100	Strap Screw				2	03
	7	EP030240	Bind Head Tapping Screw-1	3.5X12 MFZN2Y			14	01
	8	EP600140	Bind Head Tapping Screw-B	3.0X10 MFZN2BL			10	01
	9	03747250	Truss Head Tapping Screw-1	4.0X25 MFZN2Y			12	01
	10	EP030190	Bind Head Tapping Screw-1	3.5X16 MFZN2Y			5	01
	11	--	Shield Sheet (E)			(WA67960)	2	
	12	--	Electrical Adhesive Tape	AL-40 40X20m		(WA53090)		
	13	EN630110	Truss Head Tapping Screw-1	3.5X12 MFZN2Y			8	01
	14	--	Speaker Assembly			(WA67670)	2	
	14a	XU755A00	Speaker	3.0cm 8 ohm 60W		MONITOR	2	10
	14b	--	Holder			(WB10090)	2	
	14c	EP040170	Bind Head Tapping Screw-1	4.0X16 MFZN2Y			4	01
	15	--	Connector Assembly	MSP VH 8P-1320		(WA69540)		
	16	CB817510	Cord Binder	S-14B			8	03
	17	CB069250	Cord Holder	BK-1				01
	18	VA076400	Truss Head Tapping Screw-1	3.5X30 MFZN2Y			4	01
		V7082600	Score Support Assembly					23
	S1	--	Score Support			(V756670)		
	S2	V7113200	Case (A), Music Stopper				2	
	S3	V7113700	Music Stopper Assembly	BRASS			2	05
	S4	V7113400	Bushing				4	09
	S5	--	Skin	830X40.5XT0.5		(V711450)		
	S6	EP600250	Bind Head Tapping Screw-B	3.0X8 MFZN2Y			4	01
	S7	--	Nonwoven Fabric Cloth	415X5X0.25		(WB16870)	2	

*: New Parts

RANK: Japan only

■ TOP BOARD (L) ASSEMBLY

• **Front view**

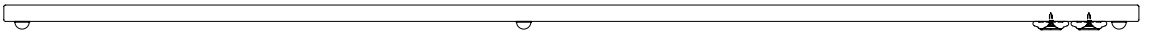

• **Bottom view**

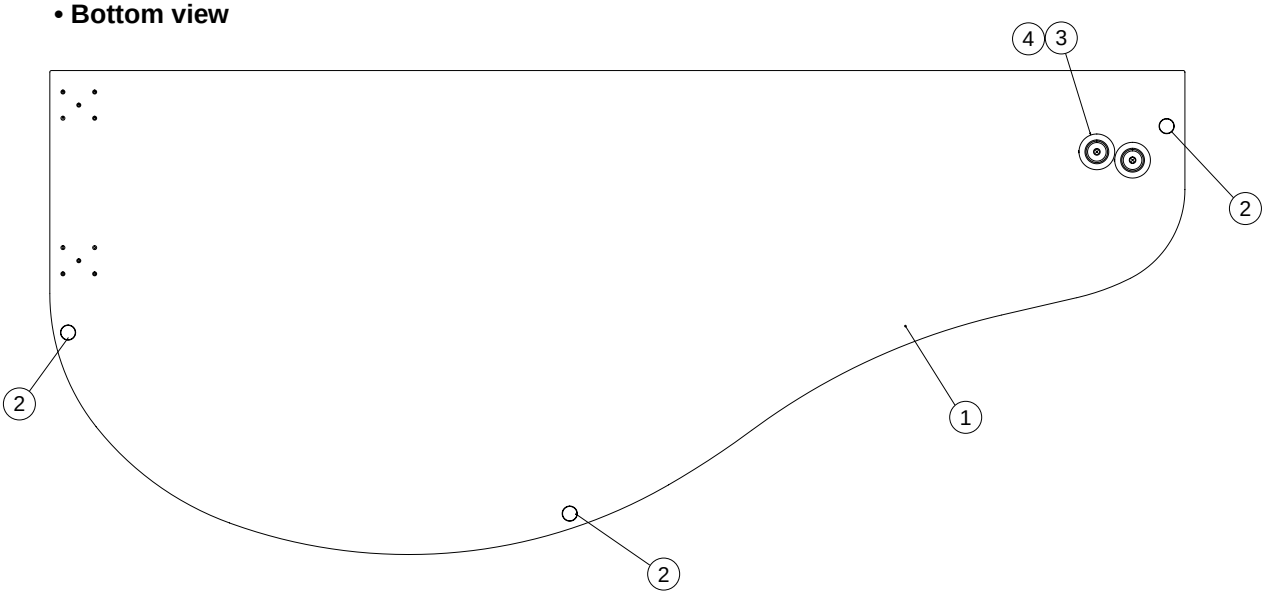

	REF NO.	PART NO.	DESCRIPTION			REMARKS	QTY	RANK
*		**WB122800**	TOP BOARD (L) ASSEMBLY	LARGE		CLP-175		
	1	**--**	Top Board L (Lid)	LARGE		(V913100)		
	2	**VS440000**	Stopper	A SJ-5017			3	04
	3	**VV773200**	Recess				2	05
	4	**03740480**	Flat Head Tapping Screw-1	3.5X16 MFZN2BL			2	01

*: New Parts

RANK: Japan only

■ ARM ASSEMBLY L

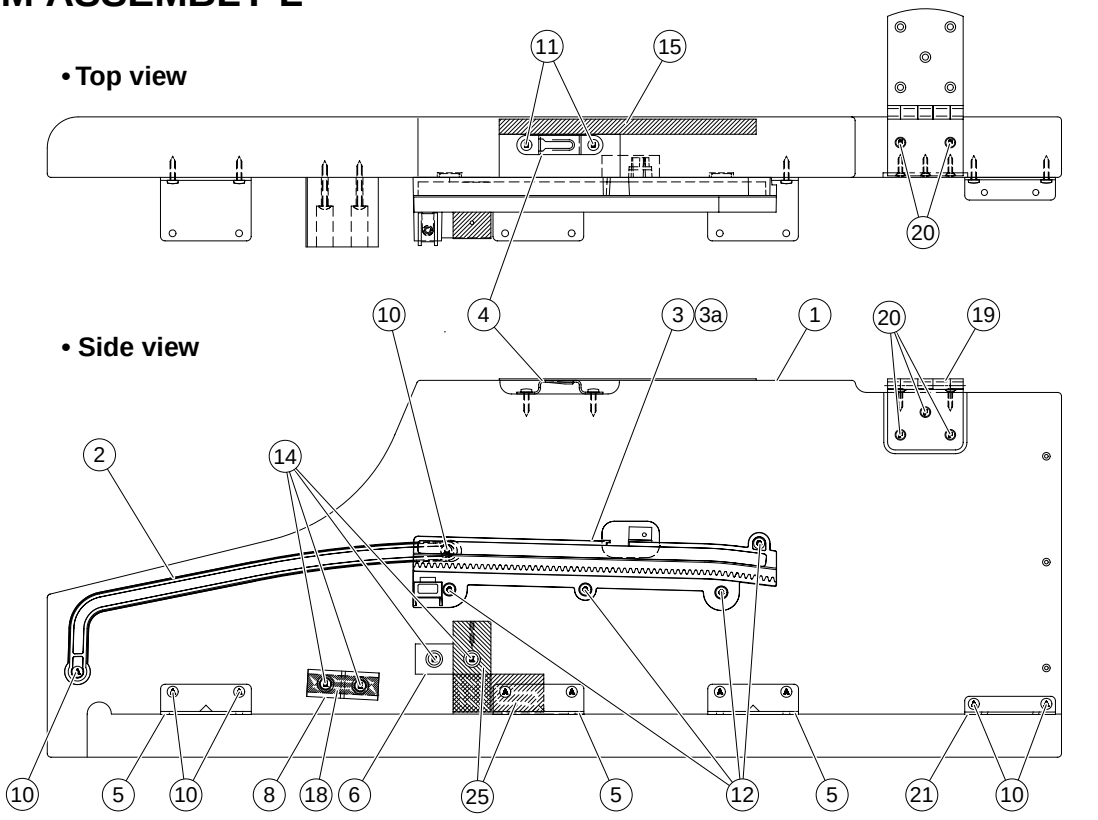

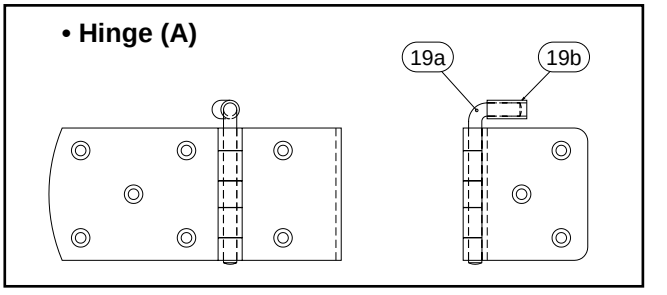

	REF NO.	PART NO.	DESCRIPTION			REMARKS	QTY	RANK
*		**WA674900**	ARM ASSEMBLY L	LEFT		CLP-175		
	1	**--**	Side Cover L	LEFT		(WA67520)		
	2	**V4949100**	Guide Rail L	LEFT				03
	3	**V8553000**	Rack Assembly L	CL LEFT				03
	3a	**VV435100**	Nut	M4 WUSN-4039				01
*	4	**WA218300**	Holder, Top Board	1.20				
	5	**--**	Holder (U), Arm			(V913710)	3	
	6	**--**	Crosspiece	UL		(WB09020)		
	8	**--**	Crosspiece			(WA68010)		
	10	**EP030190**	Bind Head Tapping Screw-1	3.5X16 MFZN2Y			10	01
	11	**EP030260**	Bind Head Tapping Screw-1	3.5X16 MFZN2BL			2	01
	12	**EP030470**	Bind Head Tapping Screw-1	3.5X20 MFZN2Y			4	01
	14	**VA076400**	Truss Head Tapping Screw-1	3.5X30 MFZN2Y			4	01
	15	**--**	Felt	170X10X1		(V938150)		
	18	**--**	Adhesive Tape	#500 W=12		(VE36310)		
	19	**V9134700**	Hinge A					12
	19a	**WA032600**	Hinge Shaft	SWP-A M5.0				
	19b	**WA032700**	Tube Clear	PVC M5.0 t=1.0				
	20	**V6295100**	Oval Head Tapping Screw-1	3.0X14 BS			5	01
	21	**--**	Holder, Rail	K		(V913700)		
	25	**--**	Electrical Adhesive Tape	AL-40 25X20m		(WA58770)		

*: New Parts

RANK: Japan only

■ ARM ASSEMBLY R

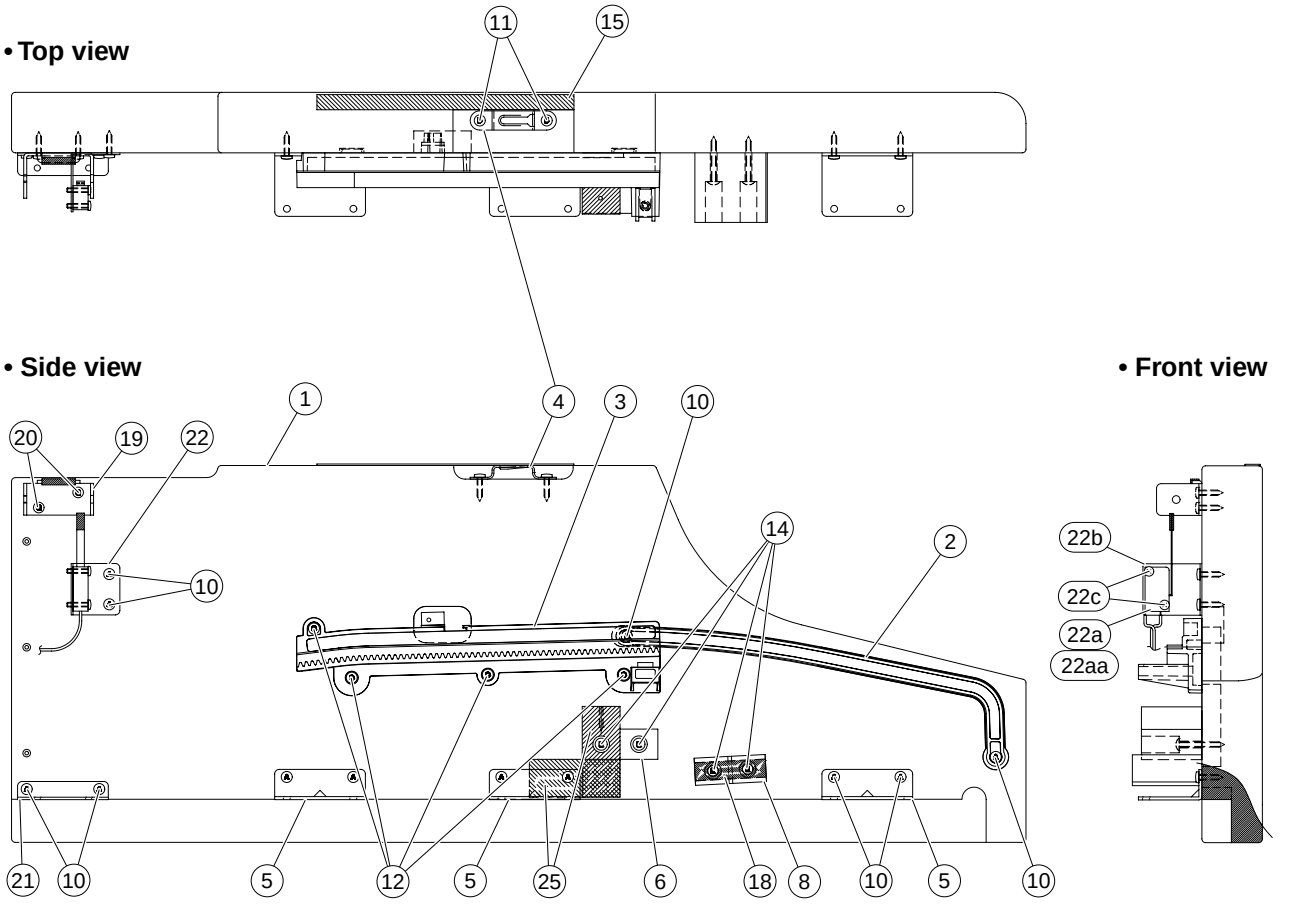

	REF NO.	PART NO.	DESCRIPTION			REMARKS	QTY	RANK
*		**WA675000**	ARM ASSEMBLY R	RIGHT		CLP-175		
	1	**--**	Side Cover R	RIGHT		(WA67530)		
	2	**V4949300**	Guide Rail R					03
	3	**V8553100**	Rack Assembly R					
*	4	**WA218300**	Holder, Top Board	1.20				
	5	**--**	Holder (U), Arm			(V913710)	3	
	6	**--**	Crosspiece	UR		(WB09030)		
	8	**--**	Crosspiece			(WA68010)		
	10	**EP030190**	Bind Head Tapping Screw-1	3.5X16 MFZN2Y			12	01
	11	**EP030260**	Bind Head Tapping Screw-1	3.5X16 MFZN2BL			2	01
	12	**EP030470**	Bind Head Tapping Screw-1	3.5X20 MFZN2Y			4	01
	14	**VA076400**	Truss Head Tapping Screw-1	3.5X30 MFZN2Y			4	01
	15	**--**	Felt	170X10X1		(V938150)		
	18	**--**	Adhesive Tape	#500 W=12		(VE36310)		
	19	**--**	Support Bar Angle Assembly			(WB23730)		
	20	**EP040170**	Bind Head Tapping Screw-1	4.0X16 MFZN2Y			2	01
	21	**--**	Holder, Rail	K		(V913700)		
	22	**--**	Connector Assembly	ROOFSW PH 2P-1050		(WB07480)		
*	22a	**WB109600**	Micro Switch Assembly					
	22aa	**VJ470400**	Micro Switch	AH75537		Roof switch		05
	22b	**--**	Holder, Micro Switch			(WB12920)		
	22c	**EG330260**	Bind Head Screw	3.0X14 MFZN2Y			2	01
	25	**--**	Electrical Adhesive Tape	AL-40 25X20m		(WA58770)		

*: New Parts

RANK: Japan only

■ END BLOCK ASSEMBLY L

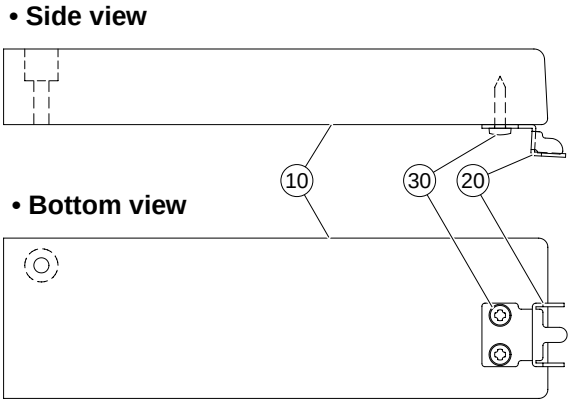

	REF NO.	PART NO.	DESCRIPTION			REMARKS	QTY	RANK
*		**WA681400**	END BLOCK ASSEMBLY L	LEFT	拍子木Ａｓｓ’ｙ（Ｌ）	CLP-175		
	10	**--**	End Block L	LEFT	拍子木（Ｌ）塗装品	(WA68160)		
	20	**--**	Angle H	1.2 L	アンダルH	(V533550)		
	30	**EP030190**	Bind Head Tapping Screw-1	3.5X16 MFZN2Y	＋バインドＴＰ１種		2	01

∗: New Parts RANK: Japan only

■ END BLOCK ASSEMBLY R

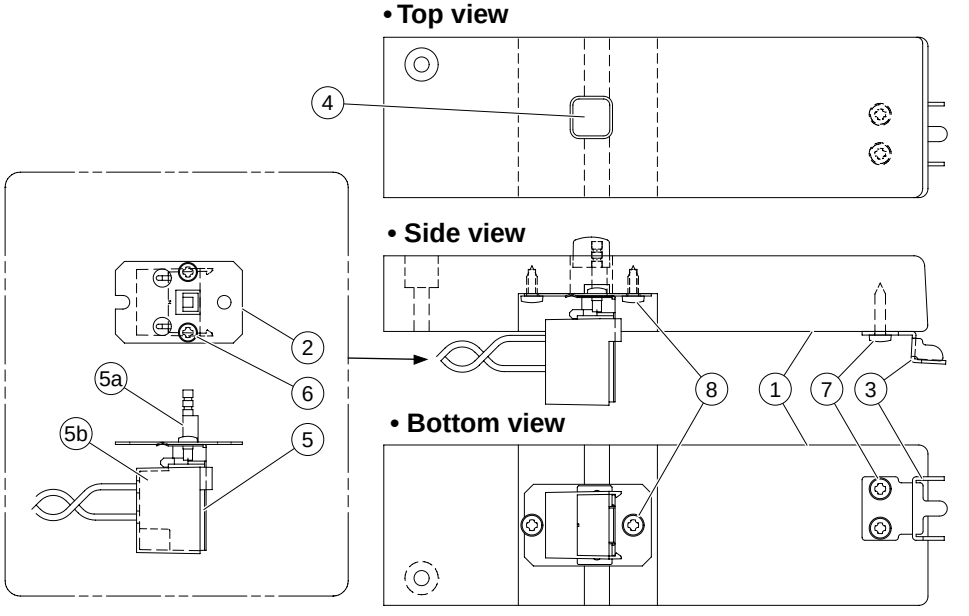

	REF NO.	PART NO.	DESCRIPTION			REMARKS	QTY	RANK
*		**WA681500**	END BLOCK ASSEMBLY R	RIGHT		CLP-175		
	1	**--**	End Block R	RIGHT		(WA68170)		
	2	**--**	Holder, Power Switch	0.8		(V862530)		
	3	**--**	Angle H	1.2 L		(V533550)		
	4	**VF663400**	Push Knob Black					02
	5	**--**	Power Switch Assembly	PSW 3P-2250		(WA69520)		
⚠	5a	**V8625100**	Push Switch	SY17-23-2(U1S1)/T		POWER		04
	5b	**V8625200**	Switch Cover					
	6	**EP600230**	Bind Head Tapping Screw-B	3.0X6 MFZN2BL			2	01
	7	**EP030190**	Bind Head Tapping Screw-1	3.5X16 MFZN2Y			2	01
	8	**EP030320**	Bind Head Tapping Screw-1	3.5X10 MFZN2BL			2	01

∗: New Parts RANK: Japan only

■ KEY COVER ASSEMBLY

• **Bottom view** • **Side view**

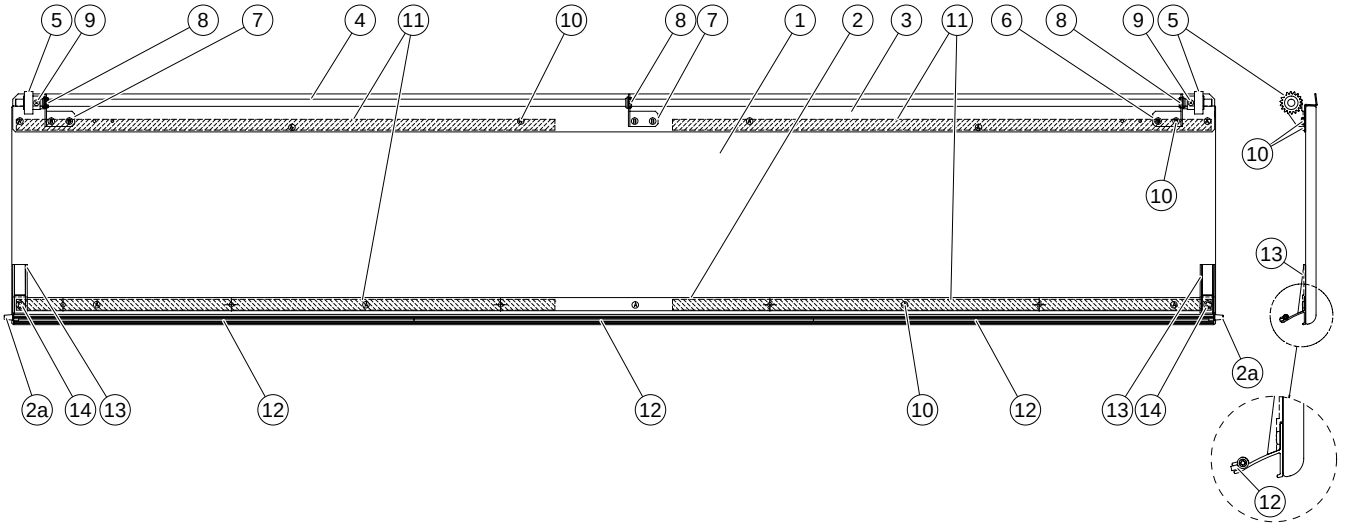

	REF NO.	PART NO.	DESCRIPTION			REMARKS	QTY	RANK
*		**WA686700**	KEY COVER ASSEMBLY			CLP-175		
	1	**--**	Key Cover			(WA68690)		
*	2	**WA687700**	Sash Assembly F	FRONT				
	2a	**V4964400**	Guide Pin				2	
	3	**--**	Sash R	REAR		(WA68040)		
	4	**--**	Rod			(WA68830)		
	5	**V9857900**	Gear	M90S			2	
	6	**VV285600**	Holder, Rod L	LEFT				03
	7	**VV285700**	Holder, Rod R	RIGHT			2	03
	8	**VS368500**	Bushing				3	03
	9	**EG330060**	Bind Head Screw	3.0X10 MFZN2Y			2	01
	10	**VN920900**	Bind Head Tapping Screw-1	3.5X8 MFZN2BL			17	01
	11	**--**	Adhesive Tape	#500 600X12		(VO02370)	4	
	12	**--**	Cushion	H-32 442X2.5XT4		(WA80650)	3	
	13	**V5902900**	Block				2	02
	14	**EP030230**	Bind Head Tapping Screw-1	3.5X10 MFZN2Y			2	01

*: New Parts

RANK: Japan only

■ INNER BOARD ASSEMBLY

• **Top view**

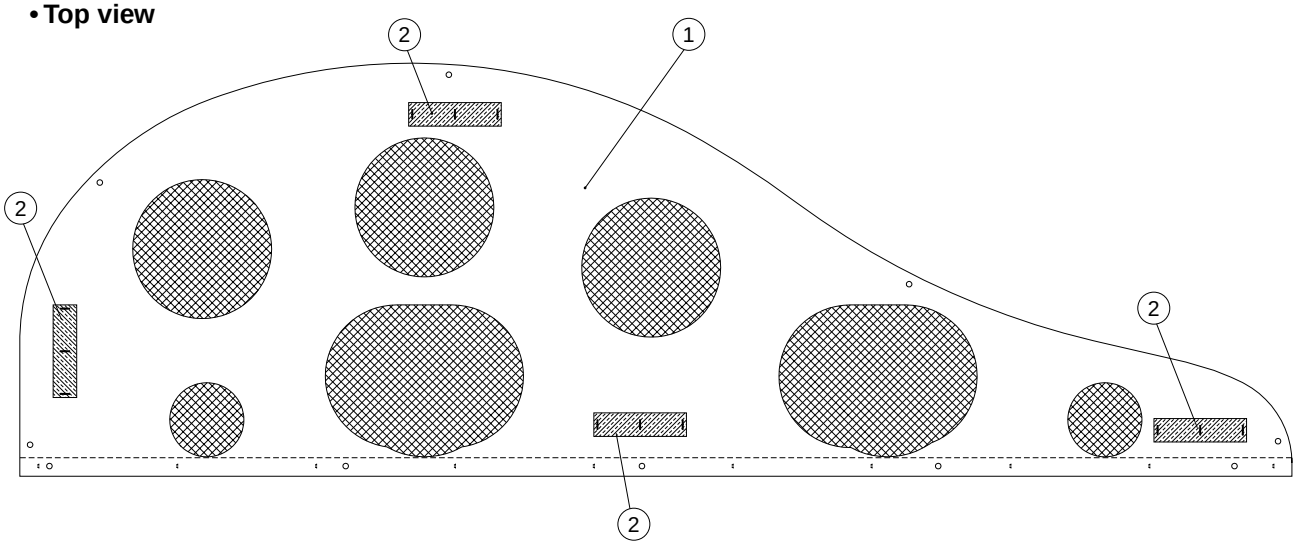

• **Bottom view**

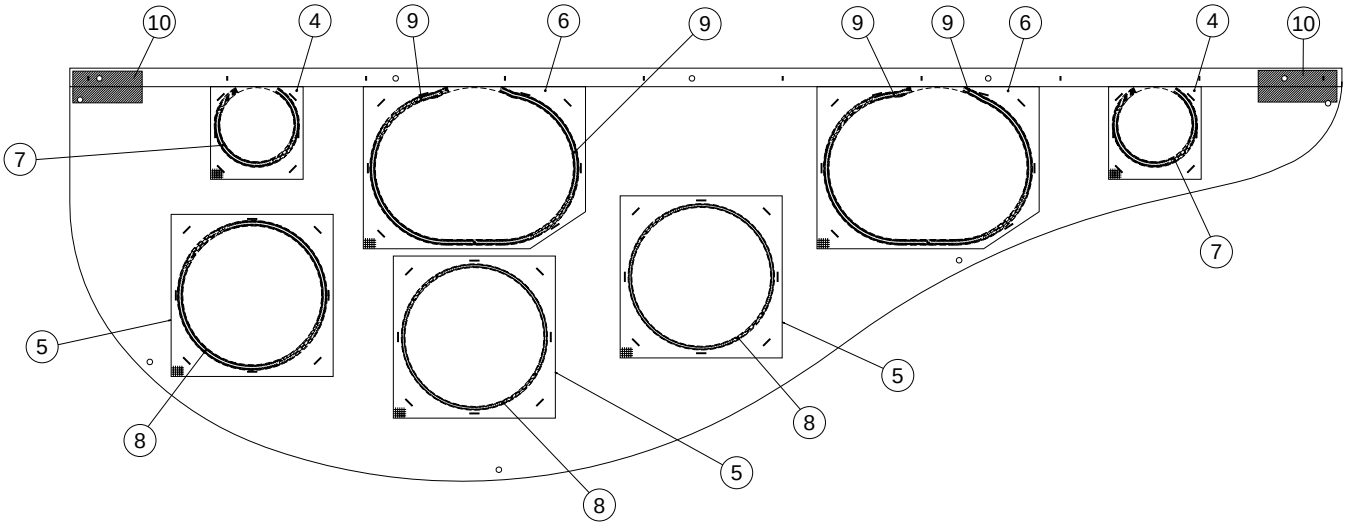

REF NO.	PART NO.	DESCRIPTION			REMARKS	QTY	RANK
	V9100800	INNER BOARD ASSEMBLY			CLP-175		36
1	--	Inner Board			(V913430)		
2	--	Dual Lock Fastener Black	100X25.4		(V620770)	4	
4	**V9995900**	Metal Net	100X100			2	03
5	**V9996000**	Metal Net	175X175			3	05
6	**V9996100**	Metal Net	175X240			2	05
7	--	Cushion	2X4X210	with Tape	(V769740)	2	
8	--	Cushion	2X4X480	with Tape	(V630000)	3	
9	--	Cushion	2X4X270	with Tape	(V890430)	4	
10	--	Electrical Adhesive Tape	TC-A40E	40X20m	(V604530)		

∗: New Parts

RANK: Japan only

■ SPEAKER BOX ASSEMBLY

• Top view

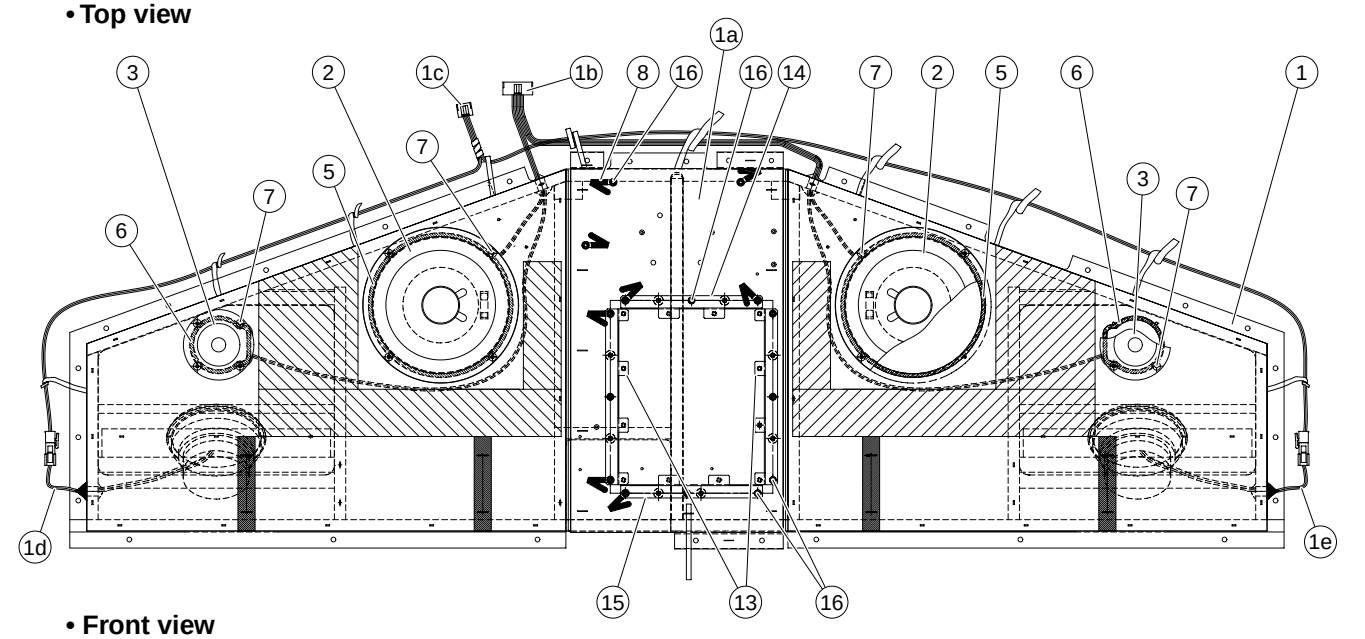

• Front view

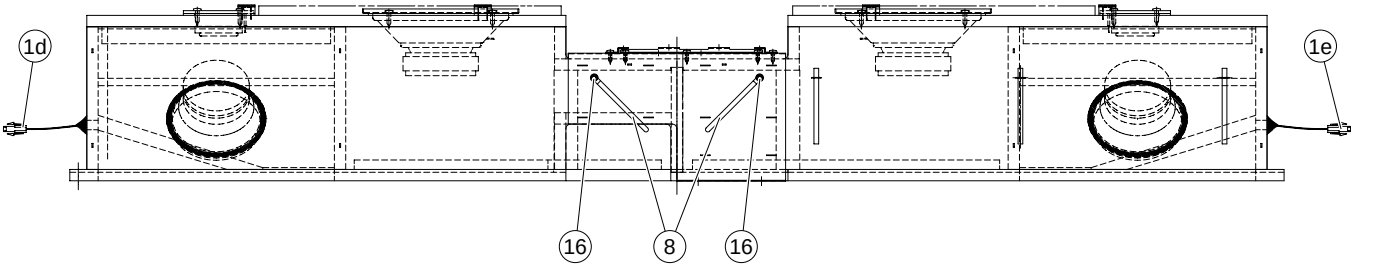

• Bottom view

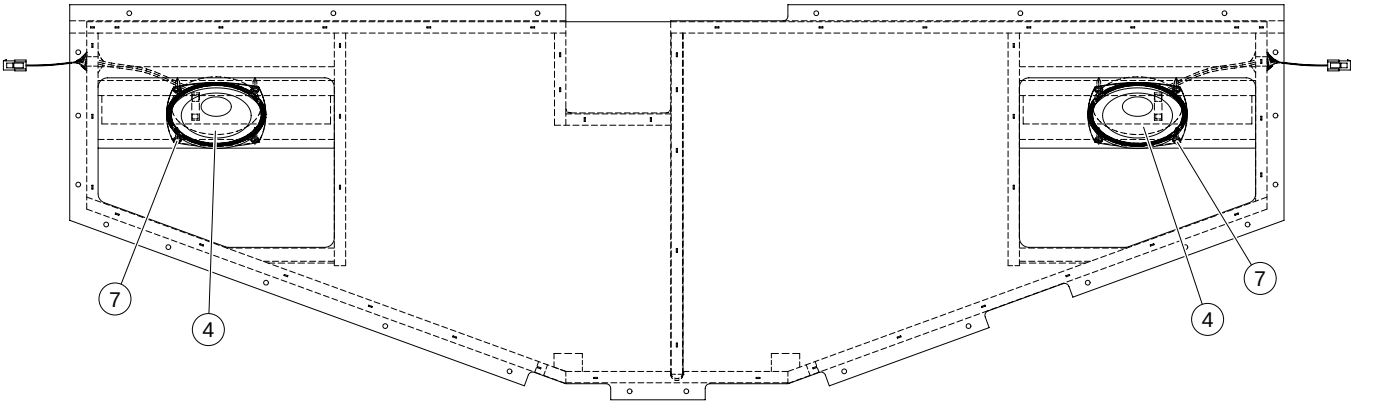

REF NO.	PART NO.	DESCRIPTION			REMARKS	QTY	RANK
	--	SPEAKER BOX ASSEMBLY			CLP-175 (WA67640)		
1	--	Speaker Box			(WA78160)		
1a	--	DM Shield Assembly			(WA84290)		
1b	--	Connector Assembly	SP VH 8P-1050		(WA69530)		
1c	--	Connector Assembly	AFC VH 4P-1400		(WA69510)		
1d	--	Connector Assembly White	AFCSPL 2P-330		(WA83870)		
1e	--	Connector Assembly Black	AFCSPR 2P-330		(WA83880)		
2	X0358A00	Speaker	16cm 8 ohm 60W		WOOFER	2	10
3	X3438A00	Speaker	5.0cm 24 ohm 60W		TWEETER	2	07
4	X2556A00	Speaker	10.0cm 4 ohm 25W		AFC	2	08
5	--	Cushion	2X4X480 with Tape		(V630000)	2	
6	--	Cushion	2X4X210 with Tape		(V769740)	2	
7	EP040250	Bind Head Tapping Screw-1	4.0X16 MFZN2BL			24	01
8	CB817510	Cord Binder	S-14B			10	03
13	--	Holder, DM			(V787780)	2	
14	--	Holder, DM L	LEFT		(V787790)		
15	--	Holder, DM R	RIGHT		(V787800)		
16	EP030240	Bind Head Tapping Screw-1	3.5X12 MFZN2Y			17	01

∗: New Parts

RANK: Japan only

■ FDD UNIT

• **Adhesive tape installation view**

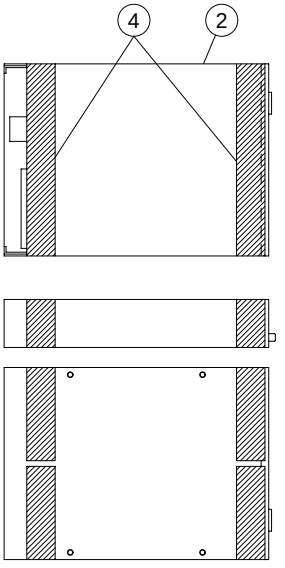

• ⑦ **Holder, FDD**

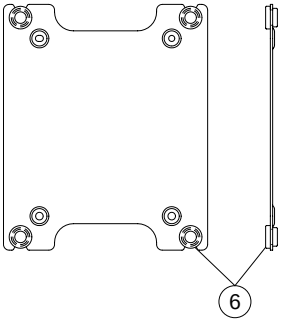

• **Rear view**

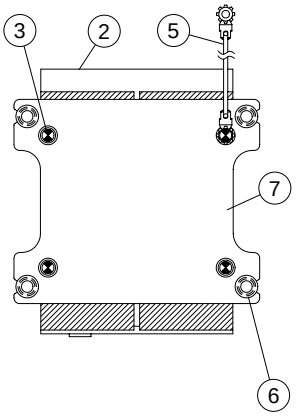

• **Top view**

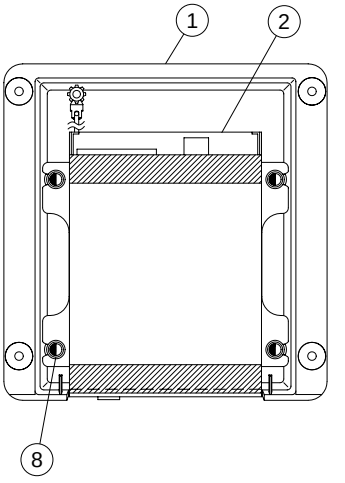

REF NO.	PART NO.	DESCRIPTION			REMARKS	QTY	RANK
	--	FDD UNIT			CLP-175 (V706210)		
1	**V7093800**	FDD Cover					03
2	**V6492300**	Floppy Disk Drive	ALPS DF354H 3.5"				13
3	**EG330150**	Bind Head Screw	3.0X5 MFZN2Y			4	01
4	--	Adhesive Tape Black	#5 15X30m		(V256440)		
5	--	GND Wire	L=120		(V686040)		
6	**VA121600**	Bushing				4	01
7	--	Holder, FDD	1.2		(V523680)		
8	**V2276900**	PW Head Tapping Screw-B	3.0X8-8 MFZN2BL			4	01

∗: New Parts

RANK: Japan only

■ DM ASSEMBLY

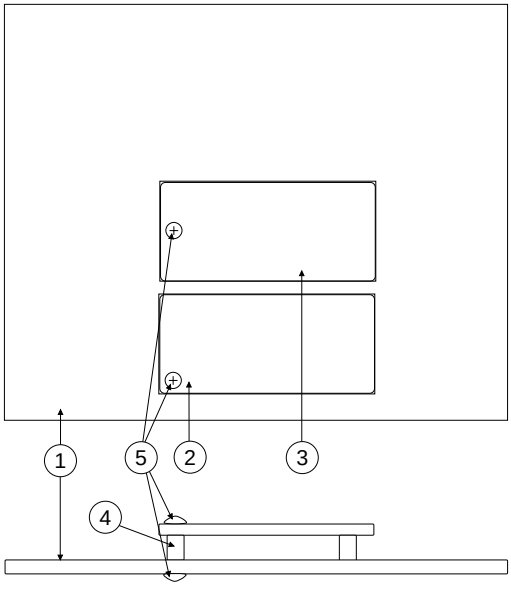

	REF NO.	PART NO.	DESCRIPTION			REMARKS	QTY	RANK
		--	DM ASSEMBLY			CLP-175 (WA74700)		
*	1	**WA746700**	Circuit Board	DM				
	2	**V8563100**	Circuit Board	WML				16
	3	**V8563200**	Circuit Board	WMH				16
	4	**V8868000**	Spacer	AR-312			2	01
	5	**EG330040**	Bind Head Screw	3.0X6 MFZN2Y			4	01

∗: New Parts RANK: Japan only

■ HEADPHONES JACK UNIT

• Bottom view **• Side view**

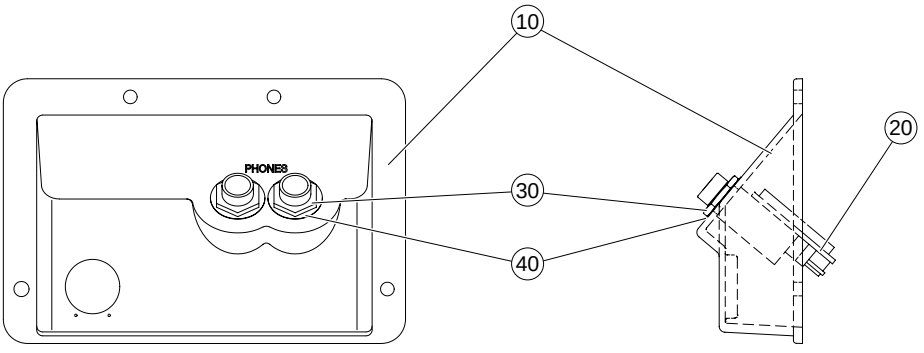

	REF NO.	PART NO.	DESCRIPTION			REMARKS	QTY	RANK
		--	HEADPHONES JACK UNIT			CLP-175 (WA74990)		
	10	**VT519000**	Headphones Cover					07
*	20	**WA627200**	Circuit Board	HP				
	30	**VB508600**	Hexagonal Nut	12.0X14X2 MFZN2BL			2	01
	40	**VJ869400**	Washer Black				2	02

∗: New Parts RANK: Japan only

■ JACK ASSEMBLY

• **Bottom view**

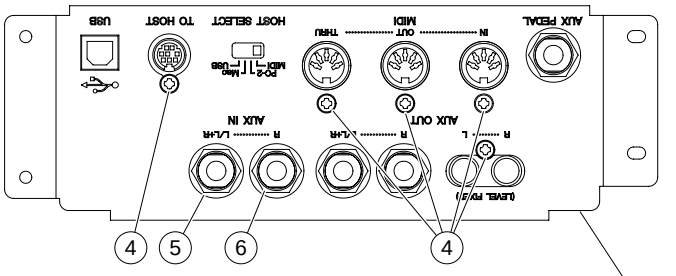

• **Rear view**

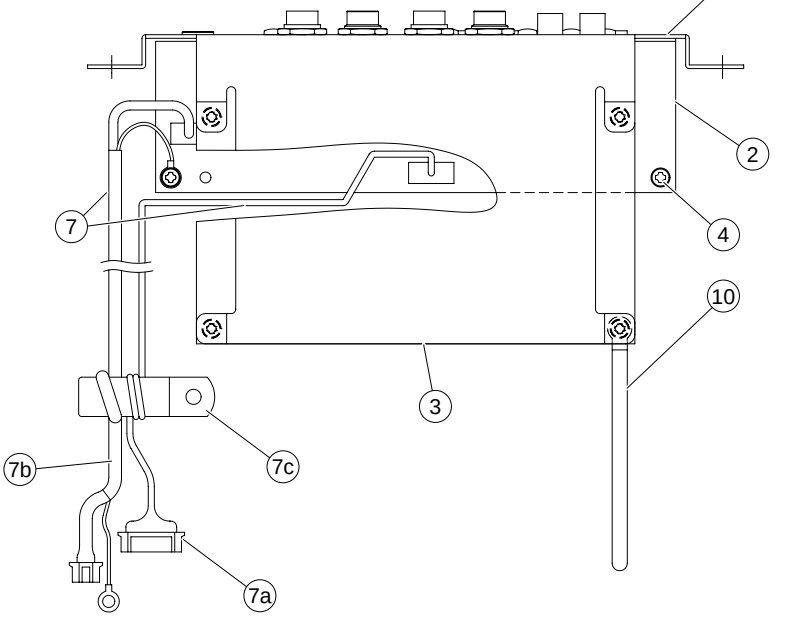

• **Side view**

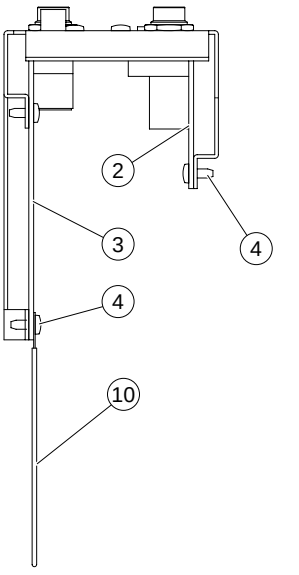

	REF NO.	PART NO.	DESCRIPTION			REMARKS		QTY	RANK
			JACK ASSEMBLY			CLP-175			
		--	Jack Assembly			U	(WB07050)		
		--	Jack Assembly			E,B	(WA75020)		
*	1	**V8627200**	Angle, Jack						08
	2	**V8496500**	Circuit Board	DJK					
*	3	**WA746000**	Circuit Board	AJK					
	4	**EP600190**	Bind Head Tapping Screw-B	3.0X8 MFZN2BL				11	01
	5	**VJ869400**	Washer Black					5	02
	6	**VB508600**	Hexagonal Nut	12.0 14X2 MFZN2BL				5	01
	7	--	Connector Assembly	DJK-LF		U	(WB06190)		
	7a	--	Connector Assembly	DJKU PH 8P-750		U	(WB06220)		
	7b	--	Connector Assembly	USB PH 4P		U	(V964520)		
	7c	**VD947800**	Data Line Filter	ESD-R-25D-B		U			05
	7	--	Connector Assembly	USB		E,B	(V964520)		
	10	**CB817510**	Cord Binder	S-14B					03

*: New Parts

RANK: Japan only

■ MA120B ASSEMBLY

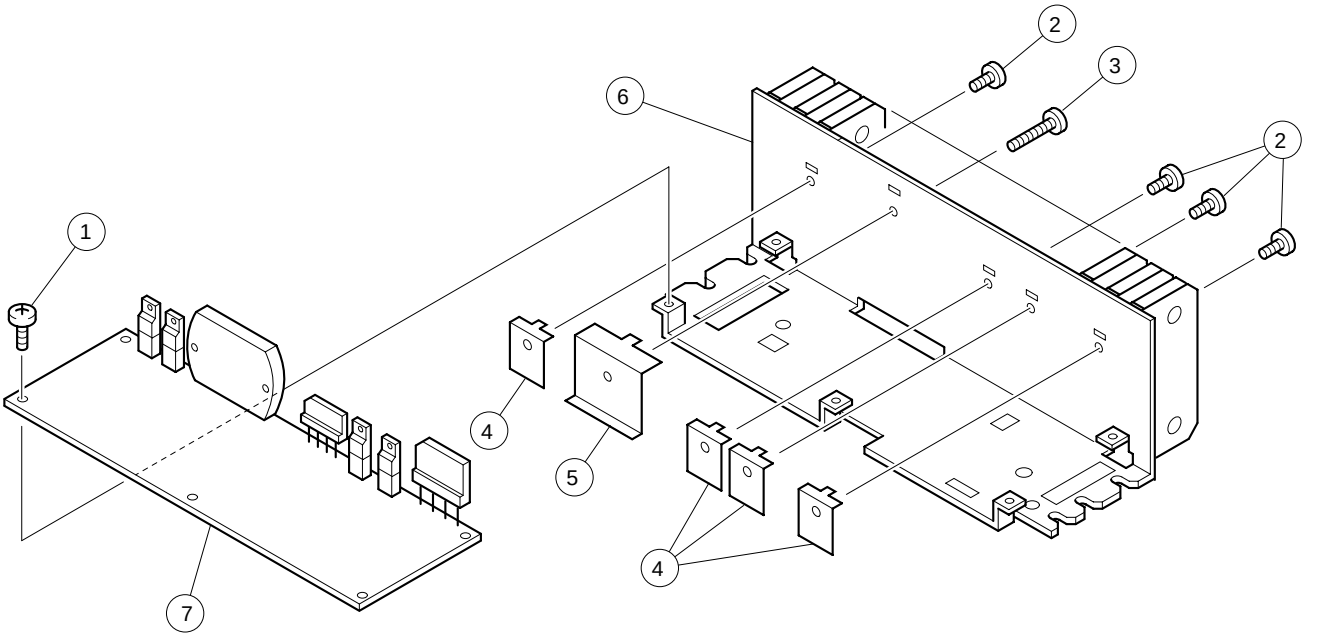

REF NO.	PART NO.	DESCRIPTION			REMARKS	QTY	RANK
		MA120B ASSEMBLY			CLP-175		
	V8595400	MA120B Assembly			U		19
	V8596000	MA120B Assembly			E,B		19
1	**EP640410**	Bind Head Tapping Screw-B	4.0X8 MFZN2Y			5	01
2	**EP600220**	Bind Head Tapping Screw-B	3.0X10 MFZN2Y			4	01
3	**EP600390**	Bind Head Tapping Screw-B	3.0X16 MFZN2Y				01
4	**VT461100**	Transistor Holder	A			4	03
5	**VT461200**	Transistor Holder	B				03
6	**--**	Heat Sink			(V761610)		
7	**--**	Circuit Board	MA120B		U (V859630)		
7	**--**	Circuit Board	MA120B		E,B (V859640)		

∗: New Parts

RANK: Japan only

■ FU120LB ASSEMBLY

• **Top view**

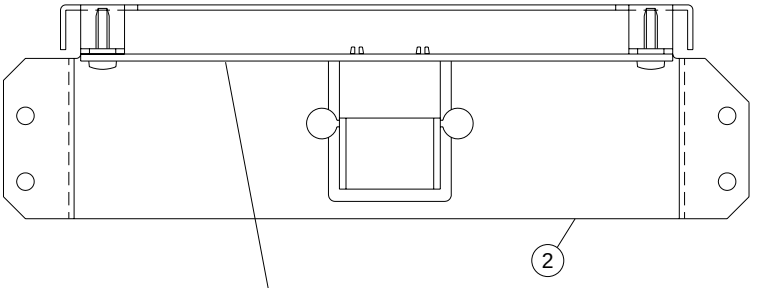

• **Front view**

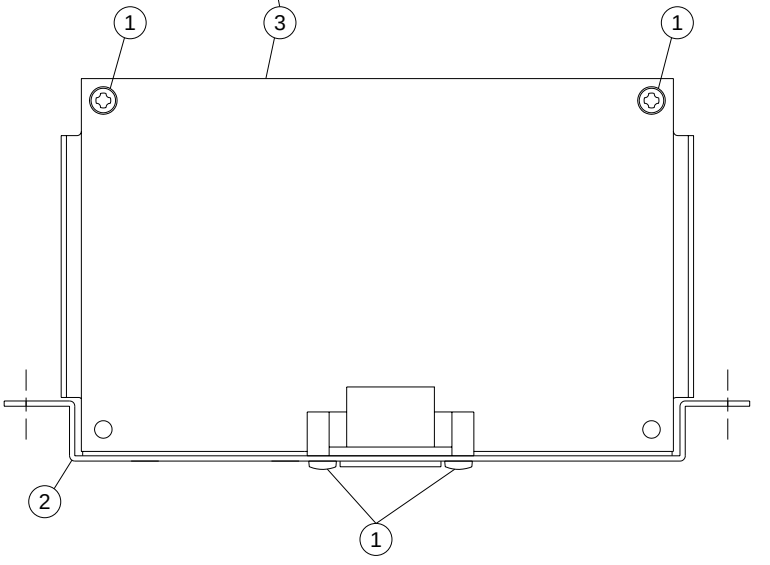

REF NO.	PART NO.	DESCRIPTION			REMARKS	QTY	RANK
		FU120LB ASSEMBLY			CLP-175		
	V7631500	FU120LB Assembly			U		10
	V7631600	FU120LB Assembly			E,B		09
1	**EP600190**	Bind Head Tapping Screw-B	3.0X8 MFZN2BL			4	01
2	**V7585500**	Panel, AC Inlet					06
3	**V7712500**	Circuit Board	FU120BL		U		07
3	**V7601300**	Circuit Board	FU120BL		E,B		07

∗: New Parts

RANK: Japan only

■ MAF ASSEMBLY

• **Bottom view**

• **Front view**

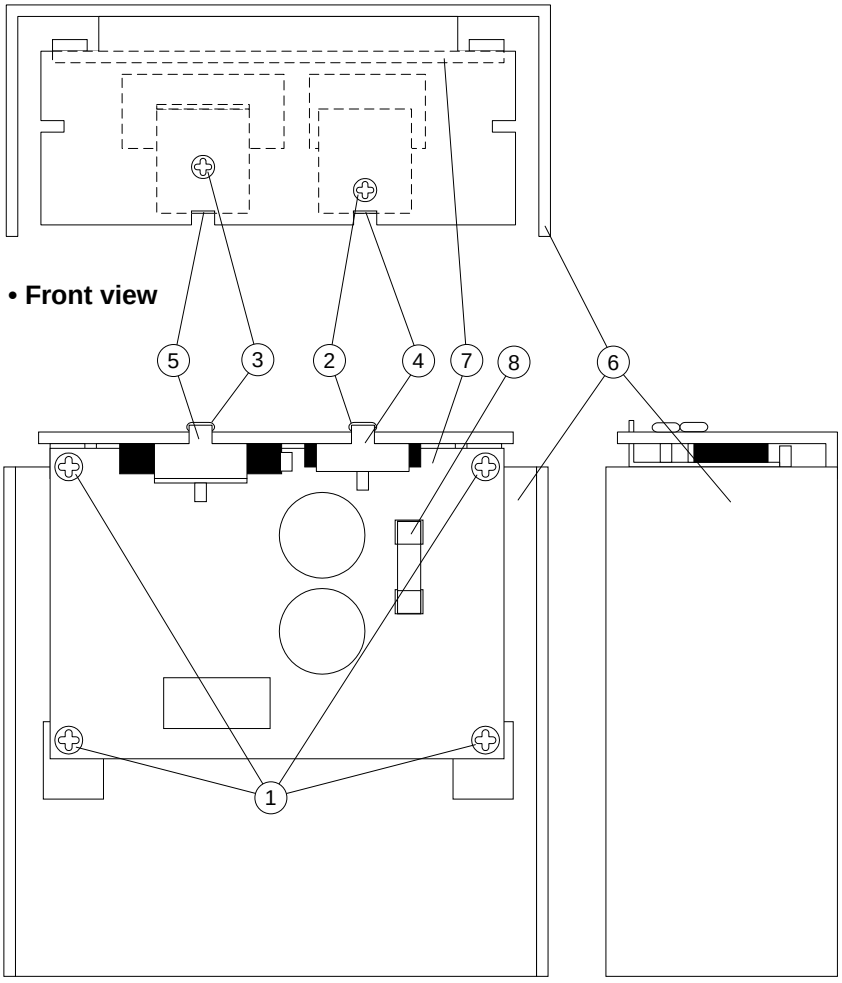

	REF NO.	PART NO.	DESCRIPTION			REMARKS	QTY	RANK
			MAF ASSEMBLY			CLP-175		
		--	MAF Assembly			U (WA74640)		
		--	MAF Assembly			E,B (WA74650)		
	1	**EP640410**	Bind Head Tapping Screw-B	4.0X8 MFZN2Y			4	01
	2	**EP600220**	Bind Head Tapping Screw-B	3.0X10 MFZN2Y				01
	3	**EP600390**	Bind Head Tapping Screw-B	3.0X16 MFZN2Y				01
	4	**VT461100**	Transistor Holder	A				03
	5	**V5184100**	Holder, Power Amplifier	A				03
	6	--	Chassis, AFC AMP			(V862540)		
*	7	**WA746200**	Circuit Board	MAF				
⚠	8	**KB003630**	Fuse	5.00A JU		U		01
⚠	8	**KB003240**	Fuse	5.00A S		E,B		01

*: New Parts

RANK: Japan only

■ PEDAL BOX UNIT

• Front view

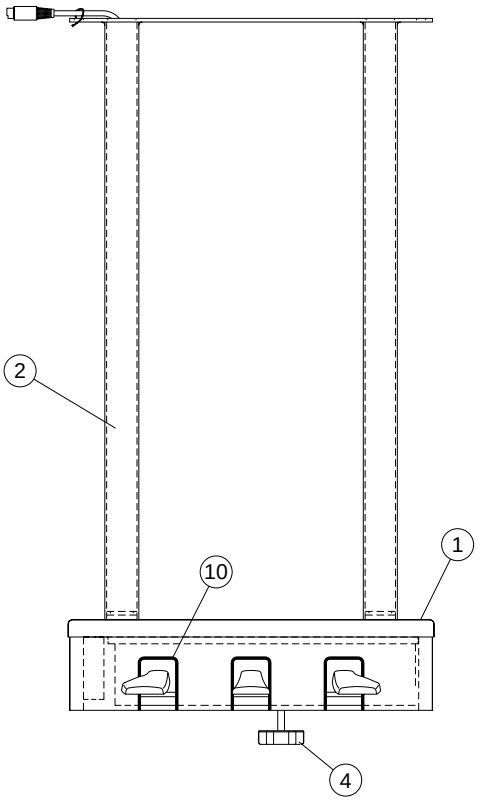

• Side view

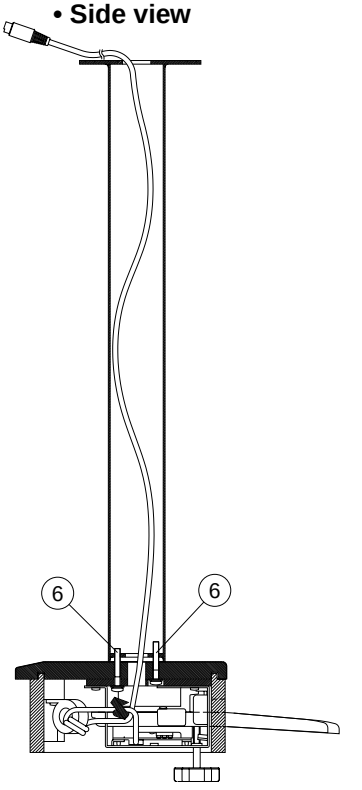

• Top view

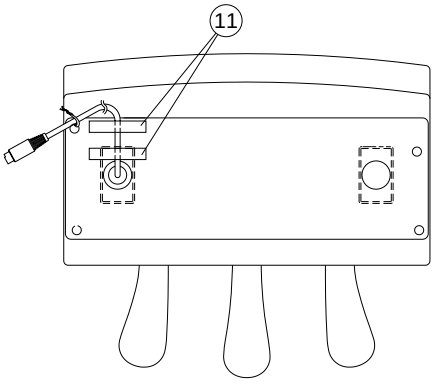

• Bottom view

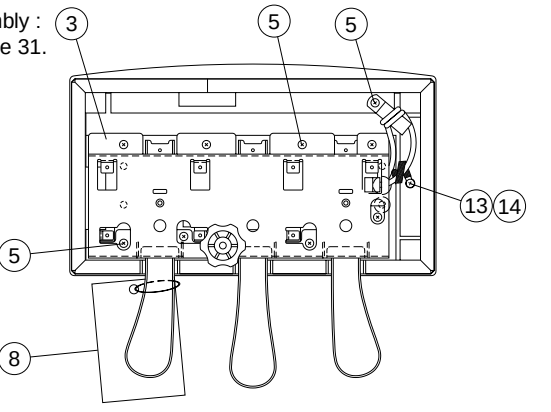

REF NO.	PART NO.	DESCRIPTION			REMARKS	QTY	RANK
	--	PEDAL BOX UNIT			CLP-175 (V909830)		
1	**V9367300**	Pedal Box Assembly					16
2	**V9130200**	Pedal Leg					19
3	**V9561400**	Pedal Assembly	Q				18
4	**VU379700**	Adjuster					02
5	**EP040230**	Bind Head Tapping Screw-1	4.0X14 MFZN2Y			9	01
6	**V9977600**	Bind Head Screw	SP 5.0X35 MFZN2BL			4	01
8	**VD966100**	Caution Label	CLAVINOVA				03
10	**V7198000**	Felt Red	125X12X2			3	01
11	**VP834600**	Adhesive Tape	12X50			2	02
13	**EP030190**	Bind Head Tapping Screw-1	3.5X16 MFZN2Y				01
14	**CB817510**	Cord Binder	S-14B				03

∗: New Parts

RANK: Japan only

■ PEDAL ASSEMBLY

• Front view

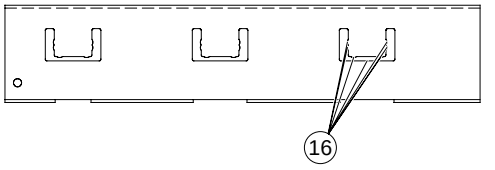

• Top view

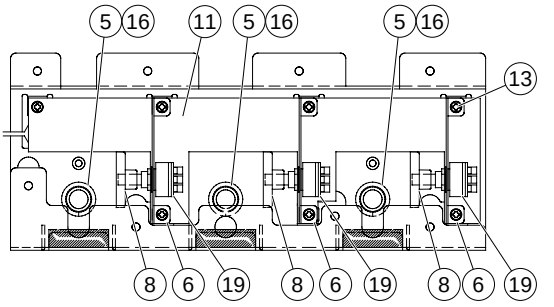

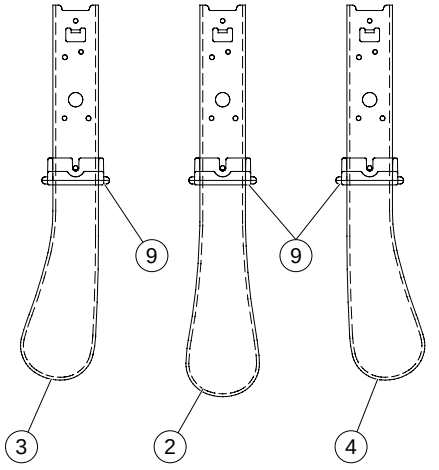

• Top view

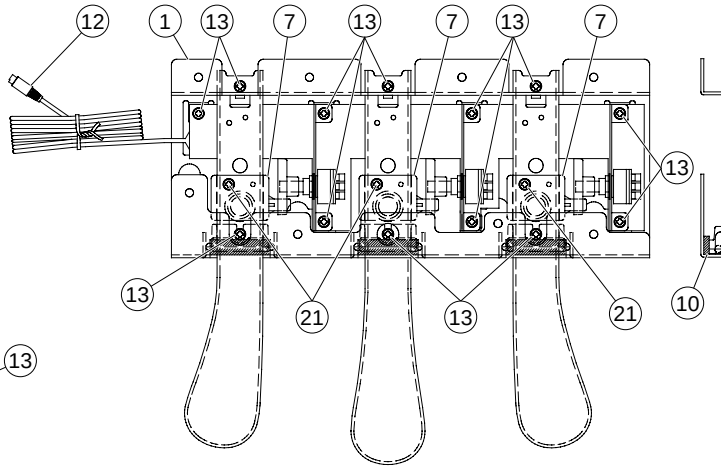

• Side view

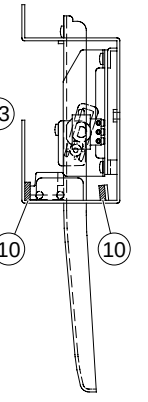

• Bottom view

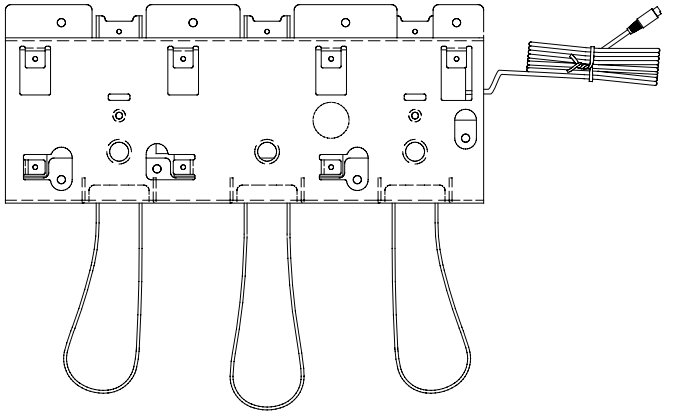

REF NO.	PART NO.	DESCRIPTION			REMARKS	QTY	RANK
	V9561400	PEDAL ASSEMBLY	Q		CLP-175		18
1	**V7511700**	Pedal Frame					06
2	**VU362000**	Pedal Piece C	CENTER		Sostenuto pedal		08
3	**VU362100**	Pedal Piece L	LEFT		Soft pedal		08
4	**VU362200**	Pedal Piece R	RIGHT		Damper pedal		08
5	**VP348100**	Pedal Spring				3	03
6	**V7598000**	Angle Bracket	3VR			3	
7	**VV475800**	Holder, VR	PEDAL			3	03
8	**VV476000**	Actuator, VR	PEDAL			3	03
9	**VU339800**	Shutter	PEDAL			3	03
10	**VU346500**	Felt Black	PA			6	03
11	**V7675600**	Circuit Board	PEDAL				07
12	**V9560500**	Connector Assembly	PK-LF				07
13	**EP600190**	Bind Head Tapping Screw-B	3.0X8 MFZN2BL			13	01
16	**TX920280**	Grease	G-31KA 50g				10
19	**HS412520**	Rotary Variable Resistor	RK16Y11L0001A		Pedal volume	3	05
* 20	**WA151300**	Spacer	PC 0.5T		For Adjust Pedal Offset		
* 20	**WB191700**	Spacer	PVC 0.2T				
20	**V9836700**	Spacer	FIBER 1T				01
20	**V9851400**	Spacer	FIBER 0.5T				01
21	**EP600190**	Bind Head Tapping Screw-B	3.0X8 MFZN2BL			3	01
21	**EP600220**	Bind Head Tapping Screw-B	3.0X10 MFZN2Y			3	01

*: New Parts

RANK: Japan only

■ FRONT KEYBED ASSEMBLY

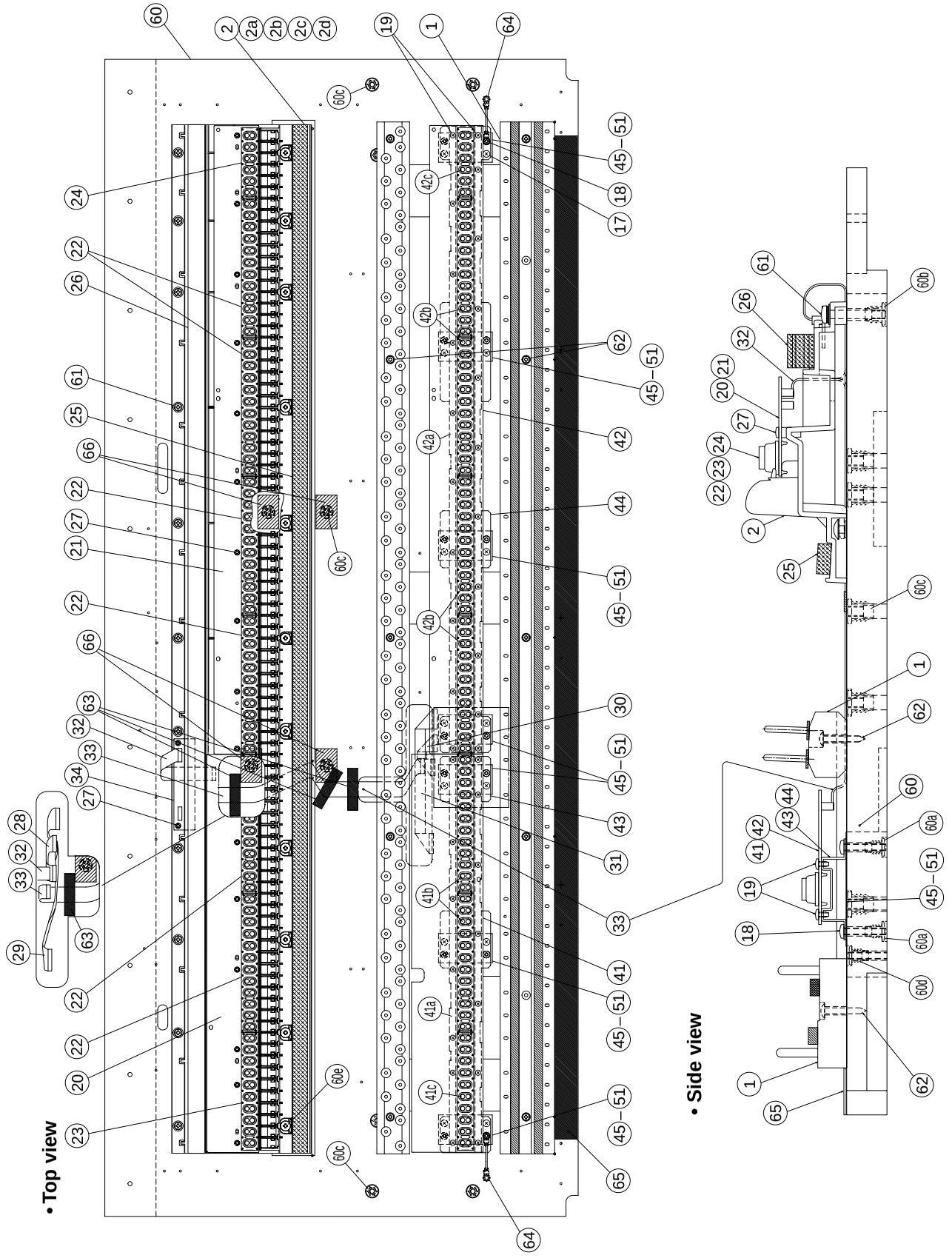

• **Top view**

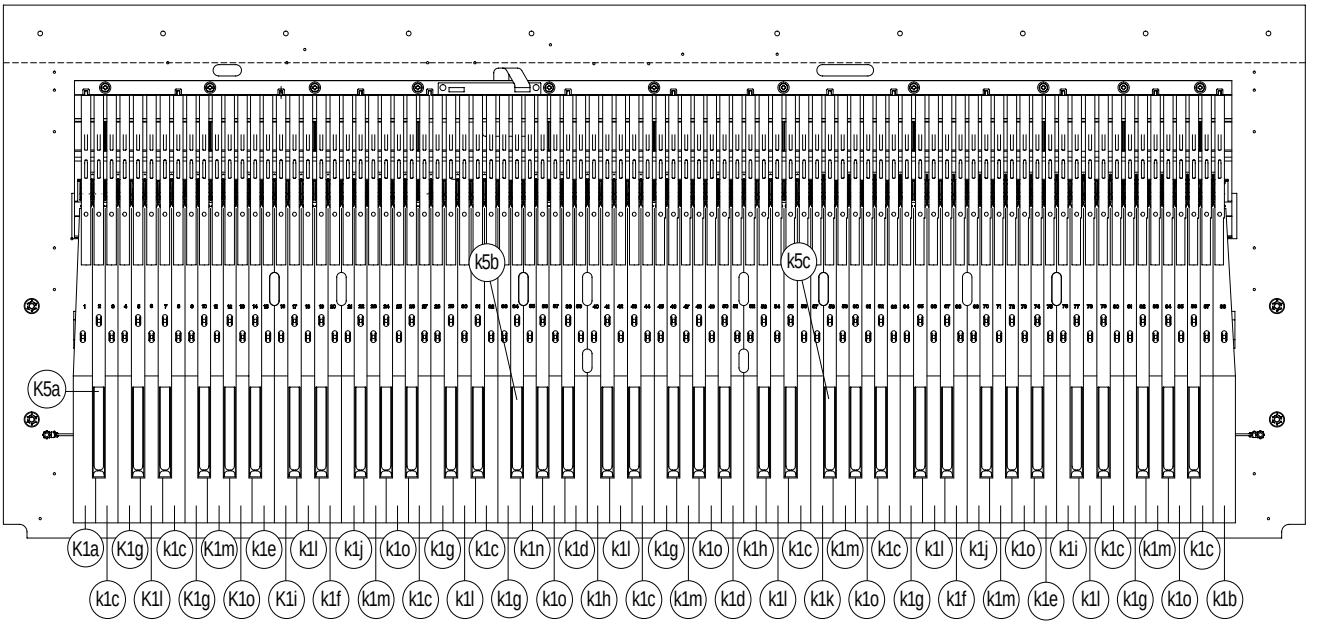

• **Side view**

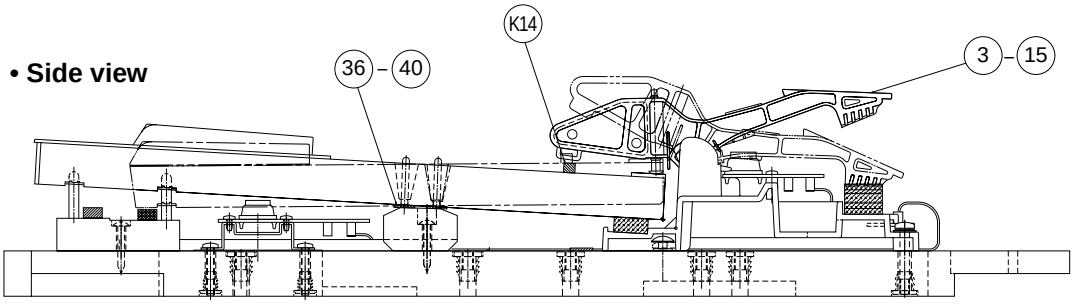

• **Keyboard sub assembly**

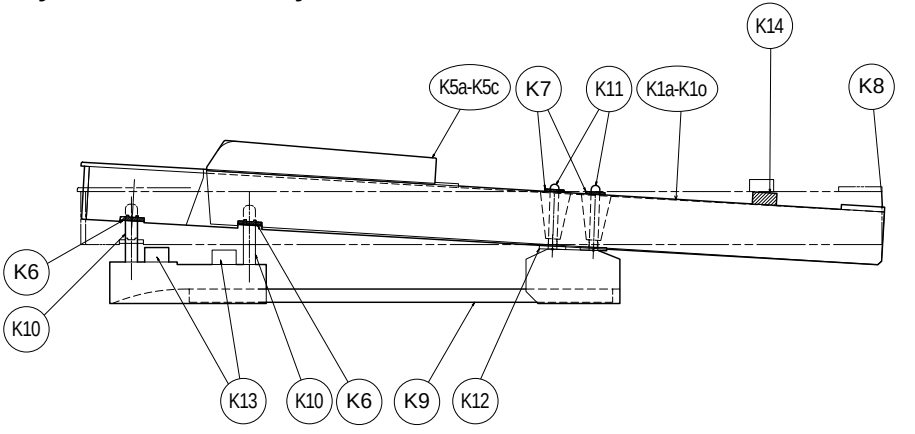

	REF NO.	PART NO.	DESCRIPTION			REMARKS		QTY	RANK
*		**WA693000**	FRONT KEYBED ASSEMBLY			CLP-175			
		--	Keyboard Assembly	EBUS WOOD 88			(WA81240)		
	60	--	Front Keybed Sub-Assembly				(V913230)		
	60a	**VA789400**	Nut	4X11.5 B MFZN2BL				14	01
	60b	**VA127400**	Nut	5.0X12 B MFZN2BL				11	01
	60c	**22401100**	Nut	6 X15.5 B MFZN2Y				12	01
	60d	**V9001100**	Nut	M4X12.5 I MFZN2BL				2	01
	60e	**V5958900**	Strap Screw	4.0X13 with Washer				11	01
	61	**V9977600**	Bind Head Screw	SP 5.0X35 MFZN2BL				11	01
	62	**EP040220**	Bind Head Tapping Screw-1	4.0X25 MFZN2Y				10	01
	63	**VP834600**	Adhesive Tape	12X50				3	02
	65	--	Nonwoven Fabric Cloth	1195X27X0.25			(WA81600)		
	66	--	Electrical Adhesive Tape	AL-40 25X20m			(WA58770)		
		--	Keyboard Assembly	EBUS WOOD 88			(WA81240)		
	1	**V5957300**	Keyboard Assembly						58
	2	--	Frame Assembly				(V764930)		
	2a	--	MK Frame				(V596010)		
	2b	--	Sound Absorbent Felt	W1220 L90 T10			(V764890)		
	2c	--	Nonwoven Fabric Cloth	440X15XT0.35			(V821960)		
	2d	--	Nonwoven Fabric Cloth	750X15XT0.35			(WA53840)		
	3	**V5960200**	Hammer, White Key	W1 WEIGHT 49.22g		KEY 1-11		7	05
	4	**V5960300**	Hammer, White Key	W2 WEIGHT 46.85g		KEY 13-21		6	05
	5	**V5960400**	Hammer, White Key	W3 WEIGHT 44.44g		KEY 23-33		7	05
	6	**V5960500**	Hammer, White Key	W4 WEIGHT 40.02g		KEY 35-44		6	05
	7	**V5960600**	Hammer, White Key	W5 WEIGHT 39.82g		KEY 45-66		13	05
	8	**V5960700**	Hammer, White Key	W6 WEIGHT 37.65g		KEY 68-88		13	05
	10	**V6658200**	Hammer, Black Key	B0 WEIGHT 42.02g		KEY 2-10		4	05
	11	**V5961000**	Hammer, Black Key	B1 WEIGHT 40.16g		KEY 12-22		5	05
	12	**V5961100**	Hammer, Black Key	B2 WEIGHT 38.26g		KEY 24-31		4	05
	13	**V5961200**	Hammer, Black Key	B3 WEIGHT 36.33g		KEY 34-43		5	05
	14	**V5961300**	Hammer, Black Key	B4 WEIGHT 44.36g		KEY 46-65		9	05
	15	**V5961400**	Hammer, Black Key	B5 WEIGHT 32.60g		KEY 67-86		9	05
	17	**EP030240**	Bind Head Tapping Screw-1	3.5X12 MFZN2Y				14	01
	18	**VB923200**	Bind Head Screw	4.0X25 MFZN2BL				14	01
	19	**EP600130**	Bind Head Tapping Screw-B	3.0X6 MFZN2Y				35	01
*	20	**WA949800**	Circuit Board	HAMMER SW-L(EBUS)					
	21	**V6129600**	Circuit Board	HAMMER SW-H					11
	22	**V6131200**	Rubber Contact	OCT 2M 12KEYS				6	05
	23	**V6159900**	Rubber Contact	88L 2M 10KEYS					05
	24	**V6160000**	Rubber Contact	88H 2M 6KEYS					05
	25	**V8171600**	Back Rail Cushion	2-C					08
	26	**V8170100**	Hammer Cushion	4-A					09
	27	**EP600220**	Bind Head Tapping Screw-B	3.0X10 MFZN2Y				19	01
	28	--	Jumper Wire	KRD 10P		Hammer Block	(V677040)		
	29	--	Jumper Wire	KRD 12P		Hammer Note	(V677050)		
	30	--	Jumper Wire	10P-85		Damper Block	(V655850)		
	31	--	Jumper Wire	12P		Damper Note	(V655860)		
	32	--	Connector Assembly	MK KRD 7P-150			(WA95230)		
	33	--	Connector Assembly	MK KRD 8P-380			(WA95240)		
*	34	**WA950400**	Circuit Board	RELAY					
	35	**TX920310**	Grease	FLOIL G-92KB BLUE		100g			
	36	**V6405700**	Paper Patch	D t0.45 Blue/Gray					01
	37	**V6405800**	Paper Patch	E t0.25 White/Gray					01
	38	**V6405900**	Paper Patch	F t0.15 Yellow					01
	39	**V6406000**	Paper Patch	G t0.08 Blue					01
	40	**V6406100**	Paper Patch	H t0.03 Semitrans.					01
	41	--	Damper Switch Assembly	LOW			(WA95100)		
*	41a	**WA951500**	Circuit Board	DAMPER SW-L(EBUS)					
	41b	**V6131300**	Rubber Contact	OCT 2M 12KEYS				2	05
	41c	**V6160100**	Rubber Contact	88L 2M 10KEYS					05
	42	--	Damper Switch Assembly	HIGH			(WA98070)		
*	42a	**WA980600**	Circuit Board	DAMPER SW-H(EBUS)					
	42b	**V6131300**	Rubber Contact	OCT 2M 12KEYS				4	05
	42c	**V6160200**	Rubber Contact	88H 2M 6KEYS					05
	43	**V5959400**	Angle Bracket L	LOW					05
	44	**V5959500**	Angle Bracket H	HIGH					06
	45	**V7430700**	Damper Spacer	A t0.1 Baby Pink					01
	46	**V7430800**	Damper Spacer	B t0.2 Cream					01
	47	**V7430900**	Damper Spacer	C t0.3 Yellow					01

*: New Parts

RANK: Japan only

REF NO.	PART NO.	DESCRIPTION			REMARKS	QTY	RANK
48	**V7431000**	Damper Spacer	D t0.4 Salmon Pink				01
49	**V7431100**	Damper Spacer	E t0.5 Pink				01
50	**V7431200**	Damper Spacer	F t0.7 White+Gray				01
51	**V7431300**	Damper Spacer	G t1.0 Gray				01
64	**--**	GND Wire	L=50		(V947810)	2	
	V5957300	Keyboard Assembly					58
K1a	**AAX23921**	White Key	A-1		KEY 1		
K1b	**AAX23931**	White Key	C-7		KEY 88		
K1c	**AAX23941**	White Key	B,E		KEY 3,8,27,32,44,56,63, 80,87	9	
K1d	**AAX23951**	White Key	B(CUTx2 KEY)		KEY 39,51	2	
K1e	**AAX41260**	White Key	B(CUT KEY)		KEY 15,75	2	
K1f	**AAX23961**	White Key	E(CUT KEY)		KEY 20,68	2	
K1g	**AAX23971**	White Key	C,F		KEY 4,9,28,33,45,64,81	7	
K1h	**AAX23981**	White Key	C(CUTx2 KEY)		KEY 40,52	2	
K1i	**AAX41270**	White Key	C(CUT KEY)		KEY 16,76	2	
K1j	**AAX23991**	White Key	F(LEFT CUT KEY)		KEY 21,69	2	
K1k	**AAX41280**	White Key	F(RIGHT CUT KEY)		KEY 57		
K1l	**AAX24001**	White Key	D		KEY 6,18,30,42,54,66,78	7	
K1m	**AAX24011**	White Key	G		KEY 11,23,47,59,71,83	6	
K1n	**AAX41290**	White Key	G2(CUT KEY)		KEY 35		
K1o	**AAX24021**	White Key	A		KEY 13,25,37,49,61,73,85	7	
K5a	**V5957800**	Black Key				34	06
K5b	**AAX41300**	Black Key	F2#(CUT KEY)		KEY 34		
K5c	**AAX41310**	Black Key	F4#(CUT KEY)		KEY 58		
K6	**--**	Bushing, Front Pin			(V595790)	88	
K7	**--**	Bushing, Balance Pin	14X10		(V644140)	88	
K8	**V5959600**	Capstan Cushion					11
K9	**--**	Key Base Assembly	WOOD		(V595840)		
K10	**--**	Front Pin			(V595800)	88	
K11	**--**	Balance Pin			(V595810)	88	
K12	**V5958200**	Patch, Balance Pin	Deep Red t=1.35mm		Original part	88	
K12	**V7817600**	Patch, Balance Pin	Deep Red t=1.00mm		Service part		
K13	**V7680600**	Keyboard Cushion White	PT-2120 t=4.6mm			2	
K14	**V8172900**	Hammer Front Cushion	DBK				
		TOOL					
	AAX24950	Capstan Screw Driver					

∗: New Parts

RANK: Japan only

■ BENCH (BC-200PE)

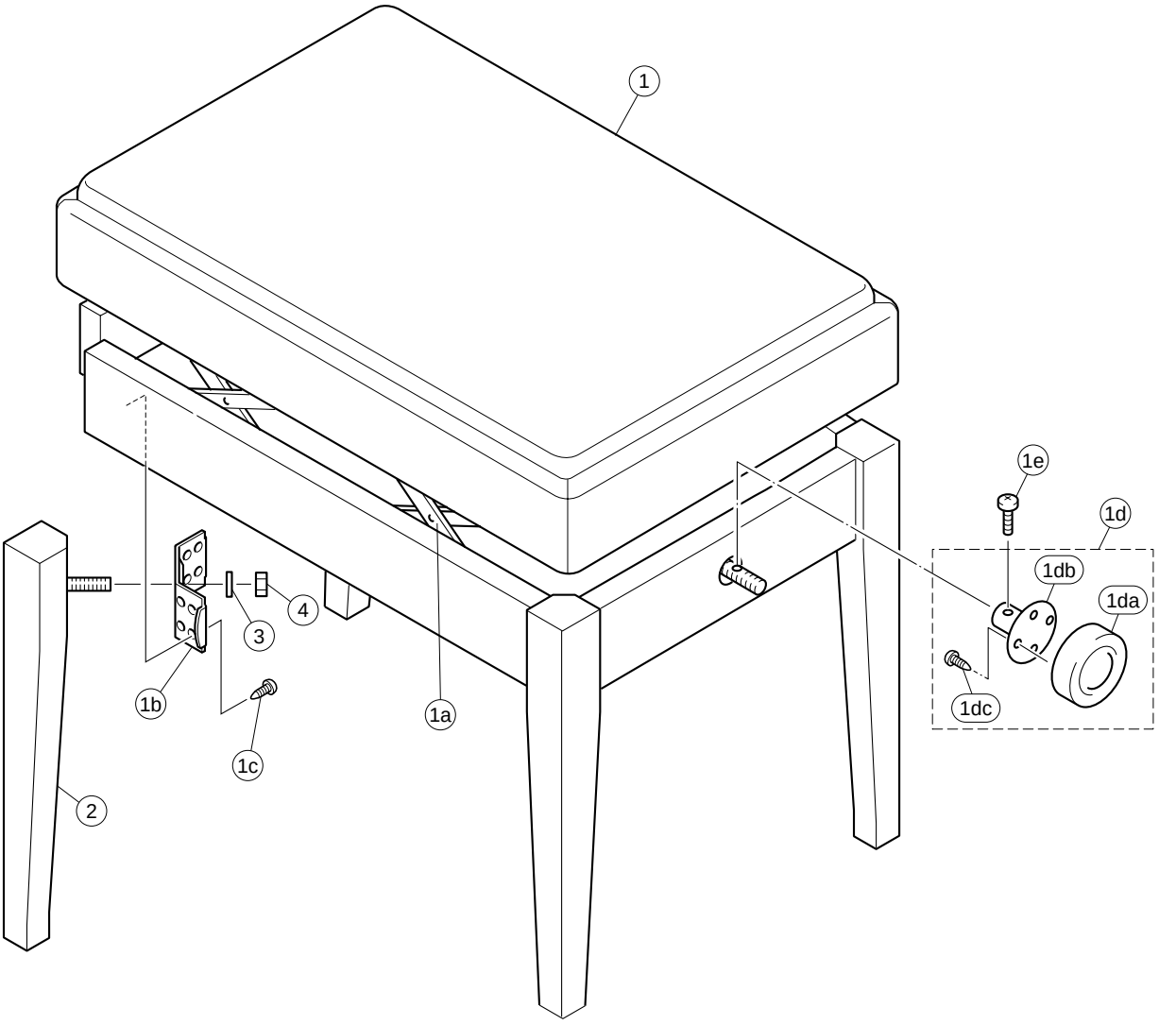

REF NO.	PART NO.	DESCRIPTION			REMARKS	QTY	RANK
		BENCH	BC-200PE		CLP-175 U		
	--	Bench	BC-200PE		U (V756440)		
A	--	Bench	PE		(V766910)		
1	**V7669400**	Bench Board Assembly	PE				55
1a	**V7662500**	Lift Assembly					19
1b	**V7396200**	Holder, Leg				4	03
1c	**EP030260**	Bind Head Tapping Screw-1	3.5X16 MFZN2BL			32	01
1d	**V7671200**	Knob Assembly					10
1da	--	Knob			(V767160)		
1db	**V7662700**	Angle					
1dc	**EP040250**	Bind Head Tapping Screw-1	4.0X16 MFZN2BL			4	01
1e	**VR060200**	Bind Head Tapping Screw-B	4.0X16 MFZN2BL				01
2	**V7672200**	Leg Assembly				4	20
3	**V7678600**	Spring Washer	#2 10.0 MFZN2BL			4	
4	**V7678700**	Hexagonal Nut	#1 10.0X1.25 MFZN2			4	01
		ACCESSORY					
	--	Wrench			(V688680)		

∗: New Parts

RANK: Japan only

■ ELECTRICAL PARTS

	REF NO.	PART NO.	DESCRIPTION			REMARKS	QTY	RANK
			ELECTRICAL PARTS			CLP-175		
*		**WA746000**	Circuit Board	AJK		(X2246B0)		
*		**WA980600**	Circuit Board	DAMPER SW-H(EBUS)		(XZ107B0)		
*		**WA951500**	Circuit Board	DAMPER SW-L(EBUS)		(X3735A0)		
		V8496500	Circuit Board	DJK		(V849640)(X2245C0)		
		V8496600	Circuit Board	PEDAL (DJK)		(V849640)(X2245C0)		
*		**WA746700**	Circuit Board	DM		(XZ592I0)		
		V7712500	Circuit Board	FU120BL		U (XS882A0)		07
		V7601300	Circuit Board	FU120BL		B,E (XS882A0)		07
*		**WA949800**	Circuit Board	HAMMER SW-L(EBUS)		(X3734A0)		
		V6129600	Circuit Board	HAMMER SW-H		(XZ105A0)		11
*		**WA627200**	Circuit Board	HP		(XQ795A0,XT162A0)		
		--	Circuit Board	MA120B		U (V859630)(XZ588D0)		
		--	Circuit Board	MA120B		B,E (V859640)(XZ588D0)		
*		**WA746200**	Circuit Board	MAF		(WA74610)(X2247D0)		
*		**WA746300**	Circuit Board	MIC		(WA74610)(X2247D0)		
		V7708200	Circuit Board	NET1		(XT123B0)		05
		V2455000	Circuit Board	NETWORK		(XV011A0)		11
		V7675600	Circuit Board	PEDAL		(X0193A0)		07
*		**WB152200**	Circuit Board	PNL		(X2243D0)		
*		**WB151900**	Circuit Board	PNR		(WB15180)(X2244B0)		
*		**WB152000**	Circuit Board	MV1		(WB15180)(X2244B0)		
*		**WA950400**	Circuit Board	RELAY		(XZ363B0)		
		V8563200	Circuit Board	WMH		(X2248A0)		16
		V8563100	Circuit Board	WML		(X2248A0)		16
*		**WA746000**	Circuit Board	AJK		(X2246B0)		
		--	Jumper Wire	0.55		(VA07890)		
	C0100	**UN866220**	Electrolytic Cap.-BP	2.20 50.0V				01
	C0101	**US063330**	Ceramic Capacitor-B (chip)	3300P 50V K				01
	C0102	**US062470**	Ceramic Capacitor-SL(chip)	470P 50V J				01
	C0103	**UN866470**	Electrolytic Cap.-BP	4.70 50.0V				01
	C0120	**UN866220**	Electrolytic Cap.-BP	2.20 50.0V				01
	C0121	**US063330**	Ceramic Capacitor-B (chip)	3300P 50V K				01
	C0122	**US062470**	Ceramic Capacitor-SL(chip)	470P 50V J				01
	C0123	**UN866470**	Electrolytic Cap.-BP	4.70 50.0V				01
	C0200	**US062150**	Ceramic Capacitor-SL(chip)	150P 50V J				01
	C0201	**UR866470**	Electrolytic Cap.	4.70 50.0V				01
	C0202	**US062100**	Ceramic Capacitor-SL(chip)	100P 50V J				01
	C0203	**US145100**	Ceramic Capacitor-F (chip)	0.1000 25V Z				01
	C0204	**UN838100**	Electrolytic Cap.-BP	100.00 16.0V				01
	C0205	**UN866470**	Electrolytic Cap.-BP	4.70 50.0V				01
	C0206	**US063100**	Ceramic Capacitor-B (chip)	1000P 50V K				01
	C0250	**US062150**	Ceramic Capacitor-SL(chip)	150P 50V J				01
	C0251	**UR866470**	Electrolytic Cap.	4.70 50.0V				01
	C0252	**US062100**	Ceramic Capacitor-SL(chip)	100P 50V J				01
	C0253	**US145100**	Ceramic Capacitor-F (chip)	0.1000 25V Z				01
	C0254	**UN838100**	Electrolytic Cap.-BP	100.00 16.0V				01
	C0255	**UN866470**	Electrolytic Cap.-BP	4.70 50.0V				01
	C0256	**US063100**	Ceramic Capacitor-B (chip)	1000P 50V K				01
	C0301	**VR169200**	Polyester Multlay Cap.	ECQ-V1H474JL3 0.47				
	C0302	**VR169200**	Polyester Multlay Cap.	ECQ-V1H474JL3 0.47				
	C0303	**UA354150**	Polyester Film Capacitor	0.0150 50V J				
	C0304	**UA353680**	Polyester Film Capacitor	6800P 50V J				
	C0305	**VR168700**	Polyester Multlay Cap.	ECQ-V1H224JL3 0.22				
	C0306	**VR168500**	Polyester Multlay Cap.	ECQ-V1H154JL3 0.15				
	C0307	**UA354330**	Polyester Film Capacitor	0.0330 50V J				
	C0308	**UA354820**	Polyester Film Capacitor	0.0820 50V J				
	C0309	**UA354820**	Polyester Film Capacitor	0.0820 50V J				
	C0310	**VR168300**	Polyester Multlay Cap.	ECQ-V1H104JL3 0.1				
	C0311	**UA353680**	Polyester Film Capacitor	6800P 50V J				
	C0312	**VR168300**	Polyester Multlay Cap.	ECQ-V1H104JL3 0.1				
	C0313	**UA353390**	Polyester Film Capacitor	3900P 50V J				
	C0314	**UA353470**	Polyester Film Capacitor	4700P 50V J				
	C0320	**US062470**	Ceramic Capacitor-SL(chip)	470P 50V J				01
	C0401	**VR169200**	Polyester Multlay Cap.	ECQ-V1H474JL3 0.47				
	C0402	**VR169200**	Polyester Multlay Cap.	ECQ-V1H474JL3 0.47				
	C0403	**UA354150**	Polyester Film Capacitor	0.0150 50V J				
	C0404	**UA353680**	Polyester Film Capacitor	6800P 50V J				
	C0405	**VR168700**	Polyester Multlay Cap.	ECQ-V1H224JL3 0.22				

*: New Parts

RANK: Japan only

REF NO.	PART NO.	DESCRIPTION			REMARKS	QTY	RANK
C0406	**VR168500**	Polyester Multlay Cap.	ECQ-V1H154JL3 0.15				
C0407	**UA354330**	Polyester Film Capacitor	0.0330 50V J				
C0408	**UA354820**	Polyester Film Capacitor	0.0820 50V J				
C0409	**UA354820**	Polyester Film Capacitor	0.0820 50V J				
C0410	**VR168300**	Polyester Multlay Cap.	ECQ-V1H104JL3 0.10				
C0411	**UA353680**	Polyester Film Capacitor	6800P 50V J				
C0412	**VR168300**	Polyester Multlay Cap.	ECQ-V1H104JL3 0.10				
C0413	**UA353390**	Polyester Film Capacitor	3900P 50V J				
C0414	**UA353470**	Polyester Film Capacitor	4700P 50V J				
C0420	**US062470**	Ceramic Capacitor-SL(chip)	470P 50V J				01
C0520	**UR848220**	Electrolytic Cap.	220.00 25.0V				01
C0521	**UR848220**	Electrolytic Cap.	220.00 25.0V				01
C0530	**US064100**	Ceramic Capacitor-B (chip)	0.0100 50V K				01
C0531	**US064100**	Ceramic Capacitor-B (chip)	0.0100 50V K				01
C0600	**UN866470**	Electrolytic Cap.-BP	4.70 50.0V				01
C0601	**US063100**	Ceramic Capacitor-B (chip)	1000P 50V K				01
C0602	**US063680**	Ceramic Capacitor-B (chip)	6800P 50V K				01
C0610	**UN866470**	Electrolytic Cap.-BP	4.70 50.0V				01
C0612	**US063680**	Ceramic Capacitor-B (chip)	6800P 50V K				01
C0620	**US063100**	Ceramic Capacitor-B (chip)	1000P 50V K				01
C0640	**US063100**	Ceramic Capacitor-B (chip)	1000P 50V K				01
CN500	**VB390700**	Connector Base Post	PH 11P TE				01
CN510	**VB390400**	Connector Base Post	PH 8P TE				01
CN520	**VB390500**	Connector Base Post	PH 9P TE				03
CN530	**VB390300**	Connector Base Post	PH 7P TE				01
CN540	**LB918020**	Base Post Connector	XH 2P TE				01
D0200	**VB493900**	Diode	MA221		}		01
D0200	**VV925900**	Diode	RLS-73 TE-11		}		01
D0640	**VB493900**	Diode	MA221		}		01
D0640	**VV925900**	Diode	RLS-73 TE-11		}		01
IC100	**XF291A00**	IC	UPC4570G2		OP AMP		03
IC200	**XT131A00**	IC	LA6517M-TE-R		OP AMP		04
IC300	**XY487A00**	IC	M5229FP		EQUALIZER		03
IC400	**XY487A00**	IC	M5229FP		EQUALIZER		03
JK600	**VL080500**	Phone Jack	YKB21-5076		AUX IN (L/L+R)		02
JK610	**VS115400**	Phone Jack Black	LGR4609-7000		AUX IN (R)		01
JK620	**VL080500**	Phone Jack	YKB21-5076		AUX OUT (L/L+R)		02
JK630	**VS115400**	Phone Jack Black	LGR4609-7000		AUX OUT (R)		01
JK640	**VP599300**	Pin Jack	2P YKC21-3120		AUX OUT (LEVEL FIXED)		02
L0600	**GE300670**	Ferrite Bead	BL02RN2-R62T4				02
L0620	**GE300670**	Ferrite Bead	BL02RN2-R62T4				02
L0640	**GE300670**	Ferrite Bead	BL02RN2-R62T4				02
R0100	**RD357100**	Carbon Resistor (chip)	10.0K 63M J				01
R0101	**RD357100**	Carbon Resistor (chip)	10.0K 63M J				01
R0102	**RD356330**	Carbon Resistor (chip)	3.3K 63M J				01
R0103	**RD355100**	Carbon Resistor (chip)	100.0 63M J				01
R0104	**RD357330**	Carbon Resistor (chip)	33.0K 63M J				01
R0120	**RD357100**	Carbon Resistor (chip)	10.0K 63M J				01
R0121	**RD357100**	Carbon Resistor (chip)	10.0K 63M J				01
R0122	**RD356330**	Carbon Resistor (chip)	3.3K 63M J				01
R0123	**RD355100**	Carbon Resistor (chip)	100.0 63M J				01
R0124	**RD357330**	Carbon Resistor (chip)	33.0K 63M J				01
R0200	**RD357100**	Carbon Resistor (chip)	10.0K 63M J				01
R0201	**RD356470**	Carbon Resistor (chip)	4.7K 63M J				01
R0203	**RD354330**	Carbon Resistor (chip)	33.0 63M J				01
R0204	**RD356100**	Carbon Resistor (chip)	1.0K 63M J				01
R0250	**RD357100**	Carbon Resistor (chip)	10.0K 63M J				01
R0251	**RD356470**	Carbon Resistor (chip)	4.7K 63M J				01
R0253	**RD354330**	Carbon Resistor (chip)	33.0 63M J				01
R0254	**RD356100**	Carbon Resistor (chip)	1.0K 63M J				01
R0301	**RD357150**	Carbon Resistor (chip)	15.0K 63M J				01
R0302	**RD356270**	Carbon Resistor (chip)	2.7K 63M J				01
R0303	**RD357150**	Carbon Resistor (chip)	15.0K 63M J				01
R0304	**RD356560**	Carbon Resistor (chip)	5.6K 63M J				01
R0305	**RD356120**	Carbon Resistor (chip)	1.2K 63M J				01
R0306	**RD357180**	Carbon Resistor (chip)	18.0K 63M J				01
R0307	**RD356180**	Carbon Resistor (chip)	1.8K 63M J				01
R0308	**RD357180**	Carbon Resistor (chip)	18.0K 63M J				01
R0309	**RD356180**	Carbon Resistor (chip)	1.8K 63M J				01
R0310	**RD357180**	Carbon Resistor (chip)	18.0K 63M J				01

∗: New Parts

RANK: Japan only

	REF NO.	PART NO.	DESCRIPTION			REMARKS	QTY	RANK
	R0311	**RD350000**	Carbon Resistor (chip)	0 63M J				01
	R0312	**RD357180**	Carbon Resistor (chip)	18.0K 63M J				01
	R0313	**RD357220**	Carbon Resistor (chip)	22.0K 63M J				01
	R0314	**RD356270**	Carbon Resistor (chip)	2.7K 63M J				01
	R0320	**RD356330**	Carbon Resistor (chip)	3.3K 63M J				01
	R0321	**RD356470**	Carbon Resistor (chip)	4.7K 63M J				01
	R0322	**RD356470**	Carbon Resistor (chip)	4.7K 63M J				01
	R0323	**RD356270**	Carbon Resistor (chip)	2.7K 63M J				01
	R0401	**RD357150**	Carbon Resistor (chip)	15.0K 63M J				01
	R0402	**RD356270**	Carbon Resistor (chip)	2.7K 63M J				01
	R0403	**RD357150**	Carbon Resistor (chip)	15.0K 63M J				01
	R0404	**RD356560**	Carbon Resistor (chip)	5.6K 63M J				01
	R0405	**RD356120**	Carbon Resistor (chip)	1.2K 63M J				01
	R0406	**RD357180**	Carbon Resistor (chip)	18.0K 63M J				01
	R0407	**RD356180**	Carbon Resistor (chip)	1.8K 63M J				01
	R0408	**RD357180**	Carbon Resistor (chip)	18.0K 63M J				01
	R0409	**RD356180**	Carbon Resistor (chip)	1.8K 63M J				01
	R0410	**RD357180**	Carbon Resistor (chip)	18.0K 63M J				01
	R0411	**RD350000**	Carbon Resistor (chip)	0 63M J				01
	R0412	**RD357180**	Carbon Resistor (chip)	18.0K 63M J				01
	R0413	**RD357220**	Carbon Resistor (chip)	22.0K 63M J				01
	R0414	**RD356270**	Carbon Resistor (chip)	2.7K 63M J				01
	R0420	**RD356330**	Carbon Resistor (chip)	3.3K 63M J				01
	R0421	**RD356470**	Carbon Resistor (chip)	4.7K 63M J				01
	R0422	**RD356470**	Carbon Resistor (chip)	4.7K 63M J				01
	R0423	**RD356270**	Carbon Resistor (chip)	2.7K 63M J				01
	R0521	**RD350000**	Carbon Resistor (chip)	0 63M J				01
	R0530	**RD350000**	Carbon Resistor (chip)	0 63M J				01
	R0531	**RD350000**	Carbon Resistor (chip)	0 63M J				01
	R0532	**RD356470**	Carbon Resistor (chip)	4.7K 63M J				01
	R0540	**RD357470**	Carbon Resistor (chip)	47.0K 63M J				01
	R0541	**RD357470**	Carbon Resistor (chip)	47.0K 63M J				01
	R0600	**RD356560**	Carbon Resistor (chip)	5.6K 63M J				01
	R0601	**RD356560**	Carbon Resistor (chip)	5.6K 63M J				01
	R0610	**RD356560**	Carbon Resistor (chip)	5.6K 63M J				01
	R0611	**RD356560**	Carbon Resistor (chip)	5.6K 63M J				01
	R0620	**RD356180**	Carbon Resistor (chip)	1.8K 63M J				01
	R0621	**RD356100**	Carbon Resistor (chip)	1.0K 63M J				01
	R0630	**RD356180**	Carbon Resistor (chip)	1.8K 63M J				01
	R0631	**RD356100**	Carbon Resistor (chip)	1.0K 63M J				01
	R0640	**RD355680**	Carbon Resistor (chip)	680.0 63M J				01
	R0650	**RD355680**	Carbon Resistor (chip)	680.0 63M J				01
	R0700	**RD357180**	Carbon Resistor (chip)	18.0K 63M J				01
	R0701	**RD357470**	Carbon Resistor (chip)	47.0K 63M J				01
	R0710	**RD356100**	Carbon Resistor (chip)	1.0K 63M J				01
	R0711	**RD357220**	Carbon Resistor (chip)	22.0K 63M J				01
	R0720	**RD357330**	Carbon Resistor (chip)	33.0K 63M J				01
	R0721	**RD357330**	Carbon Resistor (chip)	33.0K 63M J				01
	R0950	**RD350000**	Carbon Resistor (chip)	0 63M J				01
	-0953	**RD350000**	Carbon Resistor (chip)	0 63M J				01
	RY200	**V8245600**	Relay	DC ATX203 12V				04
	RY200	**V8616500**	Relay	DC G6S-2 12V				04
	RY640	**V8245600**	Relay	DC ATX203 12V				04
	RY640	**V8616500**	Relay	DC G6S-2 12V				04
	TR700	**VV556400**	Transistor	2SC2412K Q,R,S				01
	TR700	**V4767500**	Transistor	2SD601A-(TX) Q,R,S				01
	TR710	**VV556400**	Transistor	2SC2412K Q,R,S				01
	TR710	**V4767500**	Transistor	2SD601A-(TX) Q,R,S				01
	TR720	**VJ927200**	Transistor	2SA1162 O,Y				01
	TR720	**VQ395600**	Transistor	2SA1052 B,C				01
*		**WA980600**	Circuit Board	DAMPER SW-H(EBUS)		(XZ107B0)		
	CN1	**VF728200**	Wire Trap	52147 10P TE				01
	CN2	**VK025600**	Wire Trap	52147 12P TE				01
	D2	**VB941200**	Diode	1SS133,1SS176				01
	D4	**VB941200**	Diode	1SS133,1SS176				01
	D6	**VB941200**	Diode	1SS133,1SS176				01
	D8	**VB941200**	Diode	1SS133,1SS176				01
	D10	**VB941200**	Diode	1SS133,1SS176				01
	D12	**VB941200**	Diode	1SS133,1SS176				01

*: New Parts

RANK: Japan only

	REF NO.	PART NO.	DESCRIPTION			REMARKS	QTY	RANK
	D14	**VB941200**	Diode	1SS133,1SS176				01
	D16	**VB941200**	Diode	1SS133,1SS176				01
	D18	**VB941200**	Diode	1SS133,1SS176				01
	D20	**VB941200**	Diode	1SS133,1SS176				01
	D22	**VB941200**	Diode	1SS133,1SS176				01
	D24	**VB941200**	Diode	1SS133,1SS176				01
	D26	**VB941200**	Diode	1SS133,1SS176				01
	D28	**VB941200**	Diode	1SS133,1SS176				01
	D30	**VB941200**	Diode	1SS133,1SS176				01
	D32	**VB941200**	Diode	1SS133,1SS176				01
	D34	**VB941200**	Diode	1SS133,1SS176				01
	D36	**VB941200**	Diode	1SS133,1SS176				01
	D38	**VB941200**	Diode	1SS133,1SS176				01
	D40	**VB941200**	Diode	1SS133,1SS176				01
	D42	**VB941200**	Diode	1SS133,1SS176				01
	D44	**VB941200**	Diode	1SS133,1SS176				01
	D46	**VB941200**	Diode	1SS133,1SS176				01
	D48	**VB941200**	Diode	1SS133,1SS176				01
	D50	**VB941200**	Diode	1SS133,1SS176				01
	D52	**VB941200**	Diode	1SS133,1SS176				01
	D54	**VB941200**	Diode	1SS133,1SS176				01
	D56	**VB941200**	Diode	1SS133,1SS176				01
	D58	**VB941200**	Diode	1SS133,1SS176				01
	D60	**VB941200**	Diode	1SS133,1SS176				01
	D62	**VB941200**	Diode	1SS133,1SS176				01
	D64	**VB941200**	Diode	1SS133,1SS176				01
	D66	**VB941200**	Diode	1SS133,1SS176				01
	D68	**VB941200**	Diode	1SS133,1SS176				01
	D70	**VB941200**	Diode	1SS133,1SS176				01
	D72	**VB941200**	Diode	1SS133,1SS176				01
	D74	**VB941200**	Diode	1SS133,1SS176				01
	D76	**VB941200**	Diode	1SS133,1SS176				01
	D78	**VB941200**	Diode	1SS133,1SS176				01
	D80	**VB941200**	Diode	1SS133,1SS176				01
	D82	**VB941200**	Diode	1SS133,1SS176				01
	D84	**VB941200**	Diode	1SS133,1SS176				01
	D86	**VB941200**	Diode	1SS133,1SS176				01
	D88	**VB941200**	Diode	1SS133,1SS176				01
	D90	**VB941200**	Diode	1SS133,1SS176				01
	D92	**VB941200**	Diode	1SS133,1SS176				01
	D94	**VB941200**	Diode	1SS133,1SS176				01
	D96	**VB941200**	Diode	1SS133,1SS176				01
	D98	**VB941200**	Diode	1SS133,1SS176				01
	D100	**VB941200**	Diode	1SS133,1SS176				01
	D102	**VB941200**	Diode	1SS133,1SS176				01
	D106	**VB941200**	Diode	1SS133,1SS176				01
	D108	**VB941200**	Diode	1SS133,1SS176				01
*		**WA951500**	Circuit Board	DAMPER SW-L(EBUS)		(X3735A0)		
	J	**--**	Jumper Wire	0.55		(VD04170)		
	C0001	**FG651220**	Ceramic Capacitor-SL	22P 50V J				01
	-0003	**FG651220**	Ceramic Capacitor-SL	22P 50V J				01
	C0004	**FG644100**	Ceramic Capacitor-F	0.0100 50V Z				01
	C0005	**UR818100**	Electrolytic Cap.	100.00 6.3V				01
	C0006	**VC694800**	Semiconductive Cera. Cap.	0.1000 25V Z				01
	C0007	**VC694800**	Semiconductive Cera. Cap.	0.1000 25V Z				01
	C0008	**FG652100**	Ceramic Capacitor-SL	100P 50V J				01
	C0009	**VH484100**	Ceramic Capacitor Array	100P 50V M				02
	CN001	**VK025600**	Wire Trap	52147 12P TE				01
	CN002	**VB390400**	Connector Base Post	PH 8P TE				01
	CN003	**VF728200**	Wire Trap	52147 10P TE				01
	D0006	**VB941200**	Diode	1SS133,1SS176				01
	D0008	**VB941200**	Diode	1SS133,1SS176				01
	D0010	**VB941200**	Diode	1SS133,1SS176				01
	D0012	**VB941200**	Diode	1SS133,1SS176				01
	D0014	**VB941200**	Diode	1SS133,1SS176				01
	D0016	**VB941200**	Diode	1SS133,1SS176				01
	D0018	**VB941200**	Diode	1SS133,1SS176				01
	D0020	**VB941200**	Diode	1SS133,1SS176				01
	D0022	**VB941200**	Diode	1SS133,1SS176				01

*: New Parts

RANK: Japan only

	REF NO.	PART NO.	DESCRIPTION			REMARKS	QTY	RANK
	D0024	**VB941200**	Diode	1SS133,1SS176				01
	D0026	**VB941200**	Diode	1SS133,1SS176				01
	D0028	**VB941200**	Diode	1SS133,1SS176				01
	D0030	**VB941200**	Diode	1SS133,1SS176				01
	D0032	**VB941200**	Diode	1SS133,1SS176				01
	D0034	**VB941200**	Diode	1SS133,1SS176				01
	D0036	**VB941200**	Diode	1SS133,1SS176				01
	D0038	**VB941200**	Diode	1SS133,1SS176				01
	D0040	**VB941200**	Diode	1SS133,1SS176				01
	D0042	**VB941200**	Diode	1SS133,1SS176				01
	D0044	**VB941200**	Diode	1SS133,1SS176				01
	D0046	**VB941200**	Diode	1SS133,1SS176				01
	D0048	**VB941200**	Diode	1SS133,1SS176				01
	D0050	**VB941200**	Diode	1SS133,1SS176				01
	D0052	**VB941200**	Diode	1SS133,1SS176				01
	D0054	**VB941200**	Diode	1SS133,1SS176				01
	D0056	**VB941200**	Diode	1SS133,1SS176				01
	D0058	**VB941200**	Diode	1SS133,1SS176				01
	D0060	**VB941200**	Diode	1SS133,1SS176				01
	D0062	**VB941200**	Diode	1SS133,1SS176				01
	D0064	**VB941200**	Diode	1SS133,1SS176				01
	D0066	**VB941200**	Diode	1SS133,1SS176				01
	D0068	**VB941200**	Diode	1SS133,1SS176				01
	D0070	**VB941200**	Diode	1SS133,1SS176				01
	D0072	**VB941200**	Diode	1SS133,1SS176				01
	-0076	**VB941200**	Diode	1SS133,1SS176				01
*	IC001	**X3704A00**	IC	UPD78F9026AGB-8 FL		LKS		08
	R0001	**HF756100**	Carbon Resistor	1.0K 1/4 J				01
	R0002	**HF755100**	Carbon Resistor	100.0 1/4 J				01
	R0004	**HF757220**	Carbon Resistor	22.0K 1/4 J				01
	R0005	**HF755100**	Carbon Resistor	100.0 1/4 J				01
	R0006	**HF755100**	Carbon Resistor	100.0 1/4 J				01
	R0007	**HF757220**	Carbon Resistor	22.0K 1/4 J				01
	RA001	**VU483500**	Resistor Array	RGLD12X103J				01
	X0001	**V6781400**	Ceramic Resonator	5.00M EF0EC5004T4Q				01
		V8496500	Circuit Board	DJK		(V849640)(X2245C0)		
		V8496600	Circuit Board	PEDAL (DJK)		(V849640)(X2245C0)		
	C0004	**US064100**	Ceramic Capacitor-B (chip)	0.0100 50V K				01
	C0005	**UR838100**	Electrolytic Cap.	100.00 16.0V				01
	C0006	**US064100**	Ceramic Capacitor-B (chip)	0.0100 50V K				01
	C0007	**UR838100**	Electrolytic Cap.	100.00 16.0V				01
	C0009	**US064100**	Ceramic Capacitor-B (chip)	0.0100 50V K				01
	C0012	**US064100**	Ceramic Capacitor-B (chip)	0.0100 50V K				01
	C0013	**UR837100**	Electrolytic Cap.	10.00 16.0V				01
	C0014	**UN817470**	Electrolytic Cap.-BP	47.00 6.3V				01
	C0016	**US064100**	Ceramic Capacitor-B (chip)	0.0100 50V K				01
	C0017	**US135100**	Ceramic Capacitor-F (chip)	0.1000 16V Z				01
	C0018	**US064100**	Ceramic Capacitor-B (chip)	0.0100 50V K				01
	C0019	**US064100**	Ceramic Capacitor-B (chip)	0.0100 50V K				01
	C0020	**UR837100**	Electrolytic Cap.	10.00 16.0V				01
	C0021	**US064100**	Ceramic Capacitor-B (chip)	0.0100 50V K				01
	C0035	**UR838100**	Electrolytic Cap.	100.00 16.0V				01
	C0036	**US064100**	Ceramic Capacitor-B (chip)	0.0100 50V K				01
	CN001	**VB389900**	Connector Base Post	PH 3P TE				01
	CN005	**VB390400**	Connector Base Post	PH 8P TE				01
	CN006	**VB390000**	Connector Base Post	PH 4P TE				01
	CN008	**LB932020**	Base Post Connector	VH 2P TE				01
	CN010	**VB390200**	Connector Base Post	PH 6P TE				01
	CN011	**VB390100**	Connector Base Post	PH 5P TE				01
	CN012	**V3671200**	USB Jack	USB 4P TE		USB		03
	CN012	**V6802600**	USB Jack	USB 4P SE				02
	D0001	**VB493900**	Diode	MA221				01
	-0004	**VB493900**	Diode	MA221				01
	D0001	**VV925900**	Diode	RLS-73 TE-11				01
	-0004	**VV925900**	Diode	RLS-73 TE-11				01
	IC001	**XI348A00**	IC	SC7SU04FEL		INVERTER		01
	IC001	**XY447A00**	IC	TC7SU04F				01
	IC002	**XU073A00**	IC	SN75C1168NSR		LINE TRANSCEIVER		05
	IC003	**VD473200**	Photo Coupler	6N137				05

*: New Parts

RANK: Japan only

REF NO.	PART NO.	DESCRIPTION			REMARKS	QTY	RANK
JK001	**VT202500**	DIN Connector	5P YKF51-50		MIDI IN		01
JK002	**VT202500**	DIN Connector	5P YKF51-50		MIDI OUT		01
JK003	**VT202500**	DIN Connector	5P YKF51-50		MIDI THRU		01
JK004	**VV269500**	DIN Connector	DIN 8P MD-S813		TO HOST		03
JK005	**VS115400**	Phone Jack Black	LGR4609-7000		AUX PEDAL		01
JK006	**V4874800**	DIN Connector	DIN 6P MD-S613		to Pedal assembly		02
L0001	**RD350000**	Carbon Resistor (chip)	0 63M J				01
-0004	**RD350000**	Carbon Resistor (chip)	0 63M J				01
L0005	**VY657200**	Chip Inductance	600 BK1608HM601				01
L0006	**RD350000**	Carbon Resistor (chip)	0 63M J				01
L0007	**VY657200**	Chip Inductance	600 BK1608HM601				01
-0023	**VY657200**	Chip Inductance	600 BK1608HM601				01
R0001	**RD355220**	Carbon Resistor (chip)	220.0 63M J				01
R0002	**RD357100**	Carbon Resistor (chip)	10.0K 63M J				01
R0003	**RD356100**	Carbon Resistor (chip)	1.0K 63M J				01
R0006	**RD357100**	Carbon Resistor (chip)	10.0K 63M J				01
-0009	**RD357100**	Carbon Resistor (chip)	10.0K 63M J				01
R0010	**RD350000**	Carbon Resistor (chip)	0 63M J				01
R0011	**RD355100**	Carbon Resistor (chip)	100.0 63M J				01
R0012	**RD355100**	Carbon Resistor (chip)	100.0 63M J				01
R0013	**RD356100**	Carbon Resistor (chip)	1.0K 63M J				01
R0014	**RD357100**	Carbon Resistor (chip)	10.0K 63M J				01
R0015	**RD357100**	Carbon Resistor (chip)	10.0K 63M J				01
R0016	**RD356100**	Carbon Resistor (chip)	1.0K 63M J				01
R0017	**RD357100**	Carbon Resistor (chip)	10.0K 63M J				01
R0018	**RD355220**	Carbon Resistor (chip)	220.0 63M J				01
R0019	**RD355220**	Carbon Resistor (chip)	220.0 63M J				01
R0020	**RD357100**	Carbon Resistor (chip)	10.0K 63M J				01
R0021	**RD357220**	Carbon Resistor (chip)	22.0K 63M J				01
R0022	**RD357220**	Carbon Resistor (chip)	22.0K 63M J				01
R0023	**RD356150**	Carbon Resistor (chip)	1.5K 63M J				01
R0024	**RD357100**	Carbon Resistor (chip)	10.0K 63M J				01
R0025	**RD357100**	Carbon Resistor (chip)	10.0K 63M J				01
R0026	**RD357220**	Carbon Resistor (chip)	22.0K 63M J				01
R0027	**RD356150**	Carbon Resistor (chip)	1.5K 63M J				01
R0028	**RD357100**	Carbon Resistor (chip)	10.0K 63M J				01
R0029	**RD355220**	Carbon Resistor (chip)	220.0 63M J				01
R0030	**RD154470**	Carbon Resistor (chip)	47.0 1/4 J				01
-0033	**RD154470**	Carbon Resistor (chip)	47.0 1/4 J				01
R0034	**RD350000**	Carbon Resistor (chip)	0 63M J				01
R0035	**RD350000**	Carbon Resistor (chip)	0 63M J				01
R0100	**RD350000**	Carbon Resistor (chip)	0 63M J				01
R0200	**RD350000**	Carbon Resistor (chip)	0 63M J				01
-0203	**RD350000**	Carbon Resistor (chip)	0 63M J				01
SW001	**VQ665200**	Slide Switch	SSSF144-S06N-0		HOST SELECT		03
TR001	**VV556400**	Transistor	2SC2412K Q,R,S				01
-004	**VV556400**	Transistor	2SC2412K Q,R,S				01
TR001	**V4767500**	Transistor	2SD601A-(TX) Q,R,S				01
-004	**V4767500**	Transistor	2SD601A-(TX) Q,R,S				01
*	**WA746700**	Circuit Board	DM		(XZ592I0)		
C0001	**US064100**	Ceramic Capacitor-B (chip)	0.0100 50V K				01
C0002	**US062470**	Ceramic Capacitor-SL(chip)	470P 50V J				01
C0003	**US064100**	Ceramic Capacitor-B (chip)	0.0100 50V K				01
C0004	**US062470**	Ceramic Capacitor-SL(chip)	470P 50V J				01
C0005	**US064100**	Ceramic Capacitor-B (chip)	0.0100 50V K				01
C0006	**US062470**	Ceramic Capacitor-SL(chip)	470P 50V J				01
C0007	**US064100**	Ceramic Capacitor-B (chip)	0.0100 50V K				01
C0008	**US062470**	Ceramic Capacitor-SL(chip)	470P 50V J				01
C0009	**US064100**	Ceramic Capacitor-B (chip)	0.0100 50V K				01
C0010	**US062470**	Ceramic Capacitor-SL(chip)	470P 50V J				01
C0011	**US064100**	Ceramic Capacitor-B (chip)	0.0100 50V K				01
C0012	**US062470**	Ceramic Capacitor-SL(chip)	470P 50V J				01
C0013	**US064100**	Ceramic Capacitor-B (chip)	0.0100 50V K				01
C0014	**US062470**	Ceramic Capacitor-SL(chip)	470P 50V J				01
C0015	**US064100**	Ceramic Capacitor-B (chip)	0.0100 50V K				01
C0016	**US062470**	Ceramic Capacitor-SL(chip)	470P 50V J				01
C0017	**US064100**	Ceramic Capacitor-B (chip)	0.0100 50V K				01
C0018	**US062470**	Ceramic Capacitor-SL(chip)	470P 50V J				01
C0019	**US064100**	Ceramic Capacitor-B (chip)	0.0100 50V K				01

*: New Parts

RANK: Japan only

REF NO.	PART NO.	DESCRIPTION			REMARKS	QTY	RANK
C0020	**US062470**	Ceramic Capacitor-SL(chip)	470P 50V J				01
C0021	**US064100**	Ceramic Capacitor-B (chip)	0.0100 50V K				01
C0022	**US062470**	Ceramic Capacitor-SL(chip)	470P 50V J				01
C0023	**US064100**	Ceramic Capacitor-B (chip)	0.0100 50V K				01
C0024	**US062470**	Ceramic Capacitor-SL(chip)	470P 50V J				01
C0025	**US064100**	Ceramic Capacitor-B (chip)	0.0100 50V K				01
C0026	**US062470**	Ceramic Capacitor-SL(chip)	470P 50V J				01
C0027	**US064100**	Ceramic Capacitor-B (chip)	0.0100 50V K				01
C0028	**US062470**	Ceramic Capacitor-SL(chip)	470P 50V J				01
C0029	**UF018100**	Electrolytic Cap. (chip)	100 6.3V				01
C0030	**UF018100**	Electrolytic Cap. (chip)	100 6.3V				01
C0031	**US135100**	Ceramic Capacitor-F (chip)	0.1000 16V Z				01
C0032	**US062100**	Ceramic Capacitor-SL(chip)	100P 50V J				01
-0036	**US062100**	Ceramic Capacitor-SL(chip)	100P 50V J				01
C0037	**US135100**	Ceramic Capacitor-F (chip)	0.1000 16V Z				01
C0038	**UF037100**	Electrolytic Cap. (chip)	10 16V				01
C0039	**US135100**	Ceramic Capacitor-F (chip)	0.1000 16V Z				01
C0040	**US135100**	Ceramic Capacitor-F (chip)	0.1000 16V Z				01
C0042	**UF118220**	Electrolytic Cap. (chip)	220 6.3V UUR0J2				01
C0043	**US135100**	Ceramic Capacitor-F (chip)	0.1000 16V Z				01
C0044	**UF118220**	Electrolytic Cap. (chip)	220 6.3V UUR0J2				01
C0045	**UF138220**	Electrolytic Cap. (chip)	220 16V UUR1C2				01
C0046	**UF138220**	Electrolytic Cap. (chip)	220 16V UUR1C2				01
C0047	**US135100**	Ceramic Capacitor-F (chip)	0.1000 16V Z				01
-0051	**US135100**	Ceramic Capacitor-F (chip)	0.1000 16V Z				01
C0053	**US135100**	Ceramic Capacitor-F (chip)	0.1000 16V Z				01
C0055	**UF138220**	Electrolytic Cap. (chip)	220 16V UUR1C2				01
C0056	**UF138220**	Electrolytic Cap. (chip)	220 16V UUR1C2				01
C0057	**US135100**	Ceramic Capacitor-F (chip)	0.1000 16V Z				01
C0058	**UF037100**	Electrolytic Cap. (chip)	10 16V				01
C0059	**US064100**	Ceramic Capacitor-B (chip)	0.0100 50V K				01
C0060	**US064100**	Ceramic Capacitor-B (chip)	0.0100 50V K				01
C0061	**US135100**	Ceramic Capacitor-F (chip)	0.1000 16V Z				01
C0062	**US061270**	Ceramic Capacitor-CH(chip)	27P 50V J				01
C0063	**US135100**	Ceramic Capacitor-F (chip)	0.1000 16V Z				01
C0065	**US135100**	Ceramic Capacitor-F (chip)	0.1000 16V Z				01
C0066	**US064100**	Ceramic Capacitor-B (chip)	0.0100 50V K				01
C0067	**US061270**	Ceramic Capacitor-CH(chip)	27P 50V J				01
C0069	**UF037100**	Electrolytic Cap. (chip)	10 16V				01
C0070	**US064100**	Ceramic Capacitor-B (chip)	0.0100 50V K				01
C0071	**US062470**	Ceramic Capacitor-SL(chip)	470P 50V J				01
C0072	**US064100**	Ceramic Capacitor-B (chip)	0.0100 50V K				01
C0073	**US062470**	Ceramic Capacitor-SL(chip)	470P 50V J				01
C0074	**US064100**	Ceramic Capacitor-B (chip)	0.0100 50V K				01
C0075	**US062470**	Ceramic Capacitor-SL(chip)	470P 50V J				01
C0076	**US064100**	Ceramic Capacitor-B (chip)	0.0100 50V K				01
C0077	**US062470**	Ceramic Capacitor-SL(chip)	470P 50V J				01
C0078	**US135100**	Ceramic Capacitor-F (chip)	0.1000 16V Z				01
C0081	**US135100**	Ceramic Capacitor-F (chip)	0.1000 16V Z				01
-0083	**US135100**	Ceramic Capacitor-F (chip)	0.1000 16V Z				01
C0085	**US064100**	Ceramic Capacitor-B (chip)	0.0100 50V K				01
C0086	**UF037100**	Electrolytic Cap. (chip)	10 16V				01
C0087	**US135100**	Ceramic Capacitor-F (chip)	0.1000 16V Z				01
C0088	**US135100**	Ceramic Capacitor-F (chip)	0.1000 16V Z				01
C0089	**US064100**	Ceramic Capacitor-B (chip)	0.0100 50V K				01
C0090	**US062470**	Ceramic Capacitor-SL(chip)	470P 50V J				01
C0091	**US064100**	Ceramic Capacitor-B (chip)	0.0100 50V K				01
C0092	**US062470**	Ceramic Capacitor-SL(chip)	470P 50V J				01
C0093	**US064100**	Ceramic Capacitor-B (chip)	0.0100 50V K				01
C0094	**US062470**	Ceramic Capacitor-SL(chip)	470P 50V J				01
C0095	**US135100**	Ceramic Capacitor-F (chip)	0.1000 16V Z				01
C0096	**US135100**	Ceramic Capacitor-F (chip)	0.1000 16V Z				01
C0098	**US060600**	Ceramic Capacitor-CH(chip)	6P 50V D				
C0099	**US060500**	Ceramic Capacitor-CH(chip)	5P 50V C				01
C0100	**UF018100**	Electrolytic Cap. (chip)	100 6.3V				01
C0101	**US135100**	Ceramic Capacitor-F (chip)	0.1000 16V Z				01
-0105	**US135100**	Ceramic Capacitor-F (chip)	0.1000 16V Z				01
C0106	**US061330**	Ceramic Capacitor-CH(chip)	33P 50V J				01
C0107	**US061330**	Ceramic Capacitor-CH(chip)	33P 50V J				01
C0109	**US135100**	Ceramic Capacitor-F (chip)	0.1000 16V Z				01

∗: New Parts

RANK: Japan only

REF NO.	PART NO.	DESCRIPTION			REMARKS	QTY	RANK
C0111	**US062470**	Ceramic Capacitor-SL(chip)	470P 50V J				01
C0112	**US064100**	Ceramic Capacitor-B (chip)	0.0100 50V K				01
C0113	**US062470**	Ceramic Capacitor-SL(chip)	470P 50V J				01
C0114	**US064100**	Ceramic Capacitor-B (chip)	0.0100 50V K				01
C0115	**US062470**	Ceramic Capacitor-SL(chip)	470P 50V J				01
C0116	**US064100**	Ceramic Capacitor-B (chip)	0.0100 50V K				01
C0117	**US062470**	Ceramic Capacitor-SL(chip)	470P 50V J				01
C0118	**US064100**	Ceramic Capacitor-B (chip)	0.0100 50V K				01
C0119	**UF037100**	Electrolytic Cap. (chip)	10 16V				01
C0120	**V9451300**	Electrolytic Cap. (chip)	68.00 4.0V				03
C0121	**US062470**	Ceramic Capacitor-SL(chip)	470P 50V J				01
C0122	**US064100**	Ceramic Capacitor-B (chip)	0.0100 50V K				01
C0123	**RD350000**	Carbon Resistor (chip)	0 63M J				01
C0124	**RD350000**	Carbon Resistor (chip)	0 63M J				01
C0125	**US062470**	Ceramic Capacitor-SL(chip)	470P 50V J				01
C0126	**RD350000**	Carbon Resistor (chip)	0 63M J				01
C0127	**US064100**	Ceramic Capacitor-B (chip)	0.0100 50V K				01
C0128	**US135100**	Ceramic Capacitor-F (chip)	0.1000 16V Z				01
-0131	**US135100**	Ceramic Capacitor-F (chip)	0.1000 16V Z				01
C0132	**US062470**	Ceramic Capacitor-SL(chip)	470P 50V J				01
C0133	**US064100**	Ceramic Capacitor-B (chip)	0.0100 50V K				01
C0134	**US062470**	Ceramic Capacitor-SL(chip)	470P 50V J				01
C0135	**US062470**	Ceramic Capacitor-SL(chip)	470P 50V J				01
C0136	**US064100**	Ceramic Capacitor-B (chip)	0.0100 50V K				01
C0137	**US064100**	Ceramic Capacitor-B (chip)	0.0100 50V K				01
C0138	**US062470**	Ceramic Capacitor-SL(chip)	470P 50V J				01
C0139	**US064100**	Ceramic Capacitor-B (chip)	0.0100 50V K				01
C0140	**US062470**	Ceramic Capacitor-SL(chip)	470P 50V J				01
C0141	**US064100**	Ceramic Capacitor-B (chip)	0.0100 50V K				01
C0142	**US064100**	Ceramic Capacitor-B (chip)	0.0100 50V K				01
C0143	**US062470**	Ceramic Capacitor-SL(chip)	470P 50V J				01
C0144	**UF037100**	Electrolytic Cap. (chip)	10 16V				01
C0145	**US062470**	Ceramic Capacitor-SL(chip)	470P 50V J				01
C0146	**US062470**	Ceramic Capacitor-SL(chip)	470P 50V J				01
C0147	**US064100**	Ceramic Capacitor-B (chip)	0.0100 50V K				01
C0148	**US062470**	Ceramic Capacitor-SL(chip)	470P 50V J				01
C0149	**US062470**	Ceramic Capacitor-SL(chip)	470P 50V J				01
C0150	**US064100**	Ceramic Capacitor-B (chip)	0.0100 50V K				01
C0151	**V9451300**	Electrolytic Cap. (chip)	68.00 4.0V				03
C0152	**US064100**	Ceramic Capacitor-B (chip)	0.0100 50V K				01
C0153	**US060300**	Ceramic Capacitor-CJ(chip)	3P 50V C				01
C0154	**US061100**	Ceramic Capacitor-CH(chip)	10P 50V D				01
C0155	**US063100**	Ceramic Capacitor-B (chip)	1000P 50V K				01
C0162	**UF046470**	Electrolytic Cap. (chip)	4.7 25V				01
C0165	**UF118220**	Electrolytic Cap. (chip)	220 6.3V UUR0J2				01
C0168	**US064100**	Ceramic Capacitor-B (chip)	0.0100 50V K				01
C0169	**US062470**	Ceramic Capacitor-SL(chip)	470P 50V J				01
C0170	**US064100**	Ceramic Capacitor-B (chip)	0.0100 50V K				01
C0171	**US062470**	Ceramic Capacitor-SL(chip)	470P 50V J				01
C0172	**US062470**	Ceramic Capacitor-SL(chip)	470P 50V J				01
C0173	**US064100**	Ceramic Capacitor-B (chip)	0.0100 50V K				01
C0174	**UF037100**	Electrolytic Cap. (chip)	10 16V				01
C0175	**US064100**	Ceramic Capacitor-B (chip)	0.0100 50V K				01
C0176	**US062470**	Ceramic Capacitor-SL(chip)	470P 50V J				01
C0177	**US064100**	Ceramic Capacitor-B (chip)	0.0100 50V K				01
C0178	**US062470**	Ceramic Capacitor-SL(chip)	470P 50V J				01
C0179	**US062470**	Ceramic Capacitor-SL(chip)	470P 50V J				01
C0180	**US064100**	Ceramic Capacitor-B (chip)	0.0100 50V K				01
C0181	**UF037100**	Electrolytic Cap. (chip)	10 16V				01
C0187	**US064100**	Ceramic Capacitor-B (chip)	0.0100 50V K				01
C0188	**US062470**	Ceramic Capacitor-SL(chip)	470P 50V J				01
C0189	**US064100**	Ceramic Capacitor-B (chip)	0.0100 50V K				01
C0190	**US062470**	Ceramic Capacitor-SL(chip)	470P 50V J				01
C0191	**US064100**	Ceramic Capacitor-B (chip)	0.0100 50V K				01
C0192	**US062470**	Ceramic Capacitor-SL(chip)	470P 50V J				01
C0193	**US064100**	Ceramic Capacitor-B (chip)	0.0100 50V K				01
C0194	**US062470**	Ceramic Capacitor-SL(chip)	470P 50V J				01
C0195	**UF046470**	Electrolytic Cap. (chip)	4.7 25V				01
C0196	**UF046470**	Electrolytic Cap. (chip)	4.7 25V				01
C0197	**UF037100**	Electrolytic Cap. (chip)	10 16V				01

∗: New Parts

RANK: Japan only

REF NO.	PART NO.	DESCRIPTION			REMARKS	QTY	RANK
C0198	**US135100**	Ceramic Capacitor-F (chip)	0.1000 16V Z				01
C0200	**US135100**	Ceramic Capacitor-F (chip)	0.1000 16V Z				01
C0202	**UF037100**	Electrolytic Cap. (chip)	10 16V				01
C0205	**US064100**	Ceramic Capacitor-B (chip)	0.0100 50V K				01
C0206	**UF037100**	Electrolytic Cap. (chip)	10 16V				01
C0207	**UF037100**	Electrolytic Cap. (chip)	10 16V				01
C0208	**US135100**	Ceramic Capacitor-F (chip)	0.1000 16V Z				01
-0210	**US135100**	Ceramic Capacitor-F (chip)	0.1000 16V Z				01
C0211	**US062470**	Ceramic Capacitor-SL(chip)	470P 50V J				01
C0212	**US062470**	Ceramic Capacitor-SL(chip)	470P 50V J				01
C0213	**UF037100**	Electrolytic Cap. (chip)	10 16V				01
C0214	**US135100**	Ceramic Capacitor-F (chip)	0.1000 16V Z				01
C0215	**US135100**	Ceramic Capacitor-F (chip)	0.1000 16V Z				01
C0216	**UF037100**	Electrolytic Cap. (chip)	10 16V				01
C0217	**US135100**	Ceramic Capacitor-F (chip)	0.1000 16V Z				01
C0219	**UF037100**	Electrolytic Cap. (chip)	10 16V				01
C0220	**US135100**	Ceramic Capacitor-F (chip)	0.1000 16V Z				01
C0221	**UF037100**	Electrolytic Cap. (chip)	10 16V				01
C0222	**UF037100**	Electrolytic Cap. (chip)	10 16V				01
C0223	**US135100**	Ceramic Capacitor-F (chip)	0.1000 16V Z				01
C0224	**UF037100**	Electrolytic Cap. (chip)	10 16V				01
C0225	**UF037100**	Electrolytic Cap. (chip)	10 16V				01
C0226	**UF018100**	Electrolytic Cap. (chip)	100 6.3V				01
C0230	**US064100**	Ceramic Capacitor-B (chip)	0.0100 50V K				01
C0231	**US064100**	Ceramic Capacitor-B (chip)	0.0100 50V K				01
C0234	**US135100**	Ceramic Capacitor-F (chip)	0.1000 16V Z				01
C0235	**UE166100**	Electrolytic Cap.-BP(chip)	1 50V RV2BP				01
C0236	**UE166100**	Electrolytic Cap.-BP(chip)	1 50V RV2BP				01
C0239	**UF037100**	Electrolytic Cap. (chip)	10 16V				01
C0240	**UF037100**	Electrolytic Cap. (chip)	10 16V				01
C0241	**US135100**	Ceramic Capacitor-F (chip)	0.1000 16V Z				01
-0243	**US135100**	Ceramic Capacitor-F (chip)	0.1000 16V Z				01
C0244	**UF018100**	Electrolytic Cap. (chip)	100 6.3V				01
C0245	**V9452200**	Electrolytic Cap. (chip)	150.00 4.0V				03
C0246	**US064100**	Ceramic Capacitor-B (chip)	0.0100 50V K				01
C0247	**UF046470**	Electrolytic Cap. (chip)	4.7 25V				01
-0249	**UF046470**	Electrolytic Cap. (chip)	4.7 25V				01
C0250	**US063220**	Ceramic Capacitor-B (chip)	2200P 50V K				01
-0253	**US063220**	Ceramic Capacitor-B (chip)	2200P 50V K				01
C0254	**UF046470**	Electrolytic Cap. (chip)	4.7 25V				01
C0256	**US062820**	Ceramic Capacitor-B (chip)	820P 50V K				01
C0257	**US062820**	Ceramic Capacitor-B (chip)	820P 50V K				01
C0258	**UF046470**	Electrolytic Cap. (chip)	4.7 25V				01
C0259	**US063820**	Ceramic Capacitor-B (chip)	8200P 50V K				01
C0260	**US063820**	Ceramic Capacitor-B (chip)	8200P 50V K				01
C0263	**US062180**	Ceramic Capacitor-SL(chip)	180P 50V J				01
C0264	**US062180**	Ceramic Capacitor-SL(chip)	180P 50V J				01
C0265	**US063180**	Ceramic Capacitor-B (chip)	1800P 50V K				01
-0268	**US063180**	Ceramic Capacitor-B (chip)	1800P 50V K				01
C0272	**US062180**	Ceramic Capacitor-SL(chip)	180P 50V J				01
C0273	**US062180**	Ceramic Capacitor-SL(chip)	180P 50V J				01
C0276	**UF037100**	Electrolytic Cap. (chip)	10 16V				01
C0283	**UF046470**	Electrolytic Cap. (chip)	4.7 25V				01
C0285	**US064100**	Ceramic Capacitor-B (chip)	0.0100 50V K				01
C0286	**US064100**	Ceramic Capacitor-B (chip)	0.0100 50V K				01
C0291	**UF046470**	Electrolytic Cap. (chip)	4.7 25V				01
C0300	**US063820**	Ceramic Capacitor-B (chip)	8200P 50V K				01
C0301	**US063820**	Ceramic Capacitor-B (chip)	8200P 50V K				01
C0313	**RD350000**	Carbon Resistor (chip)	0 63M J				01
C0318	**RD350000**	Carbon Resistor (chip)	0 63M J				01
C0319	**US062100**	Ceramic Capacitor-SL(chip)	100P 50V J				01
C0321	**US064100**	Ceramic Capacitor-B (chip)	0.0100 50V K				01
C0327	**US064100**	Ceramic Capacitor-B (chip)	0.0100 50V K				01
C0328	**US064100**	Ceramic Capacitor-B (chip)	0.0100 50V K				01
CN001	**VB390500**	Connector Base Post	PH 9P TE				03
CN002	**VB390400**	Connector Base Post	PH 8P TE				01
CN003	**VB390400**	Connector Base Post	PH 8P TE				01
CN004	**VB390300**	Connector Base Post	PH 7P TE				01
CN005	**VB389900**	Connector Base Post	PH 3P TE				01
CN006	**VB390100**	Connector Base Post	PH 5P TE				01

∗: New Parts

RANK: Japan only

REF NO.	PART NO.	DESCRIPTION			REMARKS	QTY	RANK
CN007	**VB390000**	Connector Base Post	PH 4P TE				01
CN008	**LB932020**	Base Post Connector	VH 2P TE				01
CN009	**LB918020**	Base Post Connector	XH 2P TE				01
CN011	**VH343800**	Connector Header	HIF3FC-34PA2.54DSA				03
CN011	**VQ391300**	Connector	34P TE				03
CN014	**V8389000**	Connector	55091 60P TE				04
CN015	**V8389000**	Connector	55091 60P TE				04
CN019	**VB389800**	Connector Base Post	PH 2P TE				01
CN020	**VB390300**	Connector Base Post	PH 7P TE				01
CN021	**VB390100**	Connector Base Post	PH 5P TE				01
CN024	**VB390700**	Connector Base Post	PH 11P TE				01
D0001	**VV925900**	Diode	RLS-73 TE-11				01
D0002	**VS201100**	Diode	D1F60				01
-0005	**VS201100**	Diode	D1F60				01
EM001	**VD542700**	LC Filter	DSS6NF31C223Q93A				01
EM002	**VD542700**	LC Filter	DSS6NF31C223Q93A				01
EM004	**VD542700**	LC Filter	DSS6NF31C223Q93A				01
EM005	**VD542700**	LC Filter	DSS6NF31C223Q93A				01
EM007	**VD542700**	LC Filter	DSS6NF31C223Q93A				01
EM008	**VD542700**	LC Filter	DSS6NF31C223Q93A				01
IC001	**XI939A00**	IC	HD63266F		FDC		09
IC002	**X2156A00**	IC	M66291GP		USB CONTROLLER		09
IC003	**X0176A00**	IC	W986432DH-7		SDRAM 64M		15
IC003	**X3479A00**	IC	K4S643232F-TC/L60				08
IC004	**XP642A00**	IC	HD74LS09FPEL		AND		01
IC005	**XW148A00**	IC	HD74LVC245ATELL		TRANSCEIVER		02
IC005	**XZ286A00**	IC	74LVC245APW				02
IC005	**XZ287A00**	IC	SN74LVC245APWR				02
IC006	**XV890A00**	IC	TC74VHC14FT		INVERTER		02
IC007	**XY945A00**	IC	TC74VHC32FT		OR		01
IC007	**X0299A00**	IC	74VHC32MTCX				01
IC009	**XT744A00**	IC	TC74VHCT245AFT		TRANSCEIVER		07
IC009	**X0295A00**	IC	74VHCT245AMTCX				03
IC010	**XT744A00**	IC	TC74VHCT245AFT		TRANSCEIVER		07
IC010	**X0295A00**	IC	74VHCT245AMTCX				03
IC011	**XW148A00**	IC	HD74LVC245ATELL		TRANSCEIVER		02
IC012	**X0060A00**	IC	T8F02TB-0102		SWP50		15
IC014	**X2687A00**	IC	HD6417709SHF200B		CPU		20
IC017	**XF291A00**	IC	UPC4570G2		OP AMP		03
IC022	**XZ414B00**	IC	W986416DH-7		SDRAM 64M		08
IC022	**X2760A00**	IC	K4S641632F-TC75				10
IC023	**XZ414B00**	IC	W986416DH-7		SDRAM 64M		08
IC023	**X2760A00**	IC	K4S641632F-TC75				10
IC027	**XW029A00**	IC	AK4393-VF-E2		DAC		07
IC028	**XU770A00**	IC	PCM1800E/2K		ADC		07
IC029	**X2077A00**	IC	PCM1730E-1/2K		DAC		07
* IC030	**X3903100**	IC	MX23L6410		MASK ROM 64M MAIN		
IC032	**XV492A00**	IC	UPC2905T-E1		REGULATOR +5V		03
IC032	**XW674A00**	IC	NJM7805DL1A(TE1)				02
IC033	**XF291A00**	IC	UPC4570G2		OP AMP		03
-035	**XF291A00**	IC	UPC4570G2		OP AMP		03
IC036	**X0609A00**	IC	LMS8117AMP-ADJ		REGULATOR +1.5		03
IC038	**X0609A00**	IC	LMS8117AMP-ADJ		REGULATOR +2V		03
IC039	**XZ642A00**	IC	TAR5S33		REGULATOR +3.3V		
IC040	**XZ216A00**	IC	MBM29LV160BE90TN-K		FLASH ROM 16M		12
L0001	**V8901200**	Chip Solid Inductance	BLM21PG221SN1D				01
L0002	**RD250000**	Carbon Resistor (chip)	0.0 0.0 J				01
L0003	**RD250000**	Carbon Resistor (chip)	0.0 0.0 J				01
L0004	**V8901200**	Chip Solid Inductance	BLM21PG221SN1D				01
L0005	**VR579900**	Chip Inductance	BK2125HS601-T				01
-0009	**VR579900**	Chip Inductance	BK2125HS601-T				01
L0012	**VR579900**	Chip Inductance	BK2125HS601-T				01
-0035	**VR579900**	Chip Inductance	BK2125HS601-T				01
L0042	**VR579900**	Chip Inductance	BK2125HS601-T				01
R0003	**RD350000**	Carbon Resistor (chip)	0 63M J				01
R0004	**RD350000**	Carbon Resistor (chip)	0 63M J				01
R0005	**RD354330**	Carbon Resistor (chip)	33.0 63M J				01
-0007	**RD354330**	Carbon Resistor (chip)	33.0 63M J				01
R0008	**RD357100**	Carbon Resistor (chip)	10.0K 63M J				01
R0009	**RD356100**	Carbon Resistor (chip)	1.0K 63M J				01

*: New Parts

RANK: Japan only

REF NO.	PART NO.	DESCRIPTION			REMARKS	QTY	RANK
R0010	**RD356100**	Carbon Resistor (chip)	1.0K 63M J				01
R0011	**RD356150**	Carbon Resistor (chip)	1.5K 63M J				01
R0012	**RD354270**	Carbon Resistor (chip)	27.0 63M J				01
-0017	**RD354270**	Carbon Resistor (chip)	27.0 63M J				01
R0019	**RD357100**	Carbon Resistor (chip)	10.0K 63M J				01
-0021	**RD357100**	Carbon Resistor (chip)	10.0K 63M J				01
R0022	**RD356120**	Carbon Resistor (chip)	1.2K 63M J				01
R0023	**RD359100**	Carbon Resistor (chip)	1.0M 63M J				01
R0024	**RD355470**	Carbon Resistor (chip)	470.0 63M J				01
-0028	**RD355470**	Carbon Resistor (chip)	470.0 63M J				01
R0029	**RD356220**	Carbon Resistor (chip)	2.2K 63M J				01
R0030	**RD357100**	Carbon Resistor (chip)	10.0K 63M J				01
R0033	**RD355470**	Carbon Resistor (chip)	470.0 63M J				01
-0038	**RD355470**	Carbon Resistor (chip)	470.0 63M J				01
R0042	**V2747000**	Chip Inductance	BLM18PG600SN1				
R0043	**RD354680**	Carbon Resistor (chip)	68.0 63M J				01
R0044	**RD354680**	Carbon Resistor (chip)	68.0 63M J				01
R0048	**RD350000**	Carbon Resistor (chip)	0 63M J				01
R0050	**RD359100**	Carbon Resistor (chip)	1.0M 63M J				01
R0051	**RD354680**	Carbon Resistor (chip)	68.0 63M J				01
R0055	**RD355560**	Carbon Resistor (chip)	560.0 63M J				01
R0056	**RD354680**	Carbon Resistor (chip)	68.0 63M J				01
R0057	**RD350000**	Carbon Resistor (chip)	0 63M J				01
-0064	**RD350000**	Carbon Resistor (chip)	0 63M J				01
R0065	**RD357100**	Carbon Resistor (chip)	10.0K 63M J				01
R0066	**RD354680**	Carbon Resistor (chip)	68.0 63M J				01
R0067	**RD357100**	Carbon Resistor (chip)	10.0K 63M J				01
R0069	**RD354680**	Carbon Resistor (chip)	68.0 63M J				01
R0070	**RD357100**	Carbon Resistor (chip)	10.0K 63M J				01
R0071	**RD354680**	Carbon Resistor (chip)	68.0 63M J				01
R0072	**RD354680**	Carbon Resistor (chip)	68.0 63M J				01
R0073	**RD357100**	Carbon Resistor (chip)	10.0K 63M J				01
R0074	**RD357100**	Carbon Resistor (chip)	10.0K 63M J				01
R0075	**RD354680**	Carbon Resistor (chip)	68.0 63M J				01
-0077	**RD354680**	Carbon Resistor (chip)	68.0 63M J				01
R0083	**RD354680**	Carbon Resistor (chip)	68.0 63M J				01
R0087	**RD358470**	Carbon Resistor (chip)	470.0K 63M J				01
R0089	**RD358470**	Carbon Resistor (chip)	470.0K 63M J				01
R0092	**RD358470**	Carbon Resistor (chip)	470.0K 63M J				01
R0093	**RD358470**	Carbon Resistor (chip)	470.0K 63M J				01
R0095	**RD358470**	Carbon Resistor (chip)	470.0K 63M J				01
R0099	**RD356100**	Carbon Resistor (chip)	1.0K 63M J				01
-0102	**RD356100**	Carbon Resistor (chip)	1.0K 63M J				01
R0103	**RD357100**	Carbon Resistor (chip)	10.0K 63M J				01
-0105	**RD357100**	Carbon Resistor (chip)	10.0K 63M J				01
R0106	**RD350000**	Carbon Resistor (chip)	0 63M J				01
-0119	**RD350000**	Carbon Resistor (chip)	0 63M J				01
R0121	**RD354680**	Carbon Resistor (chip)	68.0 63M J				01
R0122	**RD354680**	Carbon Resistor (chip)	68.0 63M J				01
R0123	**RD357100**	Carbon Resistor (chip)	10.0K 63M J				01
R0128	**RD357100**	Carbon Resistor (chip)	10.0K 63M J				01
R0129	**RD354680**	Carbon Resistor (chip)	68.0 63M J				01
R0130	**RD357100**	Carbon Resistor (chip)	10.0K 63M J				01
R0131	**RD354680**	Carbon Resistor (chip)	68.0 63M J				01
R0132	**RD354680**	Carbon Resistor (chip)	68.0 63M J				01
R0133	**RD357100**	Carbon Resistor (chip)	10.0K 63M J				01
R0134	**RD357100**	Carbon Resistor (chip)	10.0K 63M J				01
R0136	**RD354680**	Carbon Resistor (chip)	68.0 63M J				01
R0138	**RD357100**	Carbon Resistor (chip)	10.0K 63M J				01
R0139	**RD354680**	Carbon Resistor (chip)	68.0 63M J				01
R0140	**RD357100**	Carbon Resistor (chip)	10.0K 63M J				01
R0141	**RD356100**	Carbon Resistor (chip)	1.0K 63M J				01
R0142	**RD354680**	Carbon Resistor (chip)	68.0 63M J				01
R0143	**RD357470**	Carbon Resistor (chip)	47.0K 63M J				01
R0144	**RD357100**	Carbon Resistor (chip)	10.0K 63M J				01
R0146	**RD354680**	Carbon Resistor (chip)	68.0 63M J				01
R0148	**RD357100**	Carbon Resistor (chip)	10.0K 63M J				01
R0149	**RD354680**	Carbon Resistor (chip)	68.0 63M J				01
R0150	**RD354680**	Carbon Resistor (chip)	68.0 63M J				01
R0151	**RD357100**	Carbon Resistor (chip)	10.0K 63M J				01

∗: New Parts

RANK: Japan only

REF NO.	PART NO.	DESCRIPTION			REMARKS	QTY	RANK
R0152	**RD357100**	Carbon Resistor (chip)	10.0K 63M J				01
R0153	**RD354680**	Carbon Resistor (chip)	68.0 63M J				01
R0156	**RD357100**	Carbon Resistor (chip)	10.0K 63M J				01
R0157	**RD354560**	Carbon Resistor (chip)	56.0 63M J				01
R0158	**RD354680**	Carbon Resistor (chip)	68.0 63M J				01
R0159	**RD357100**	Carbon Resistor (chip)	10.0K 63M J				01
R0160	**RD357100**	Carbon Resistor (chip)	10.0K 63M J				01
R0161	**RD354680**	Carbon Resistor (chip)	68.0 63M J				01
R0162	**RD357100**	Carbon Resistor (chip)	10.0K 63M J				01
R0163	**RD354680**	Carbon Resistor (chip)	68.0 63M J				01
R0164	**RD357100**	Carbon Resistor (chip)	10.0K 63M J				01
R0165	**RD354680**	Carbon Resistor (chip)	68.0 63M J				01
R0166	**RD354680**	Carbon Resistor (chip)	68.0 63M J				01
R0167	**RD357100**	Carbon Resistor (chip)	10.0K 63M J				01
R0168	**RD354680**	Carbon Resistor (chip)	68.0 63M J				01
R0169	**RD357100**	Carbon Resistor (chip)	10.0K 63M J				01
R0170	**RD354680**	Carbon Resistor (chip)	68.0 63M J				01
R0171	**RD357100**	Carbon Resistor (chip)	10.0K 63M J				01
R0173	**RD357100**	Carbon Resistor (chip)	10.0K 63M J				01
R0174	**RD355100**	Carbon Resistor (chip)	100.0 63M J				01
-0176	**RD355100**	Carbon Resistor (chip)	100.0 63M J				01
R0177	**RD355220**	Carbon Resistor (chip)	220.0 63M J				01
R0178	**RD357100**	Carbon Resistor (chip)	10.0K 63M J				01
R0179	**RD357100**	Carbon Resistor (chip)	10.0K 63M J				01
R0180	**RD358470**	Carbon Resistor (chip)	470.0K 63M J				01
R0181	**RD355330**	Carbon Resistor (chip)	330.0 63M J				01
R0182	**RD357100**	Carbon Resistor (chip)	10.0K 63M J				01
R0183	**RD358470**	Carbon Resistor (chip)	470.0K 63M J				01
R0184	**RD357100**	Carbon Resistor (chip)	10.0K 63M J				01
R0185	**RD356100**	Carbon Resistor (chip)	1.0K 63M J				01
R0186	**RD356100**	Carbon Resistor (chip)	1.0K 63M J				01
R0189	**RD354680**	Carbon Resistor (chip)	68.0 63M J				01
-0192	**RD354680**	Carbon Resistor (chip)	68.0 63M J				01
R0193	**RD356100**	Carbon Resistor (chip)	1.0K 63M J				01
R0194	**RD357100**	Carbon Resistor (chip)	10.0K 63M J				01
R0195	**RD357220**	Carbon Resistor (chip)	22.0K 63M J				01
R0196	**RD358120**	Carbon Resistor (chip)	120.0K 63M J				01
R0197	**RD355100**	Carbon Resistor (chip)	100.0 63M J				01
R0198	**RD355100**	Carbon Resistor (chip)	100.0 63M J				01
R0199	**RD356100**	Carbon Resistor (chip)	1.0K 63M J				01
R0200	**RD359100**	Carbon Resistor (chip)	1.0M 63M J				01
R0201	**RD357100**	Carbon Resistor (chip)	10.0K 63M J				01
-0204	**RD357100**	Carbon Resistor (chip)	10.0K 63M J				01
R0206	**RD357100**	Carbon Resistor (chip)	10.0K 63M J				01
-0211	**RD357100**	Carbon Resistor (chip)	10.0K 63M J				01
R0216	**RD350000**	Carbon Resistor (chip)	0 63M J				01
R0217	**RD350000**	Carbon Resistor (chip)	0 63M J				01
R0223	**RD357100**	Carbon Resistor (chip)	10.0K 63M J				01
R0224	**RD350000**	Carbon Resistor (chip)	0 63M J				01
R0226	**RD350000**	Carbon Resistor (chip)	0 63M J				01
R0228	**RD354680**	Carbon Resistor (chip)	68.0 63M J				01
R0230	**RD354680**	Carbon Resistor (chip)	68.0 63M J				01
R0232	**RD356100**	Carbon Resistor (chip)	1.0K 63M J				01
R0233	**RD357150**	Carbon Resistor (chip)	15.0K 63M J				01
R0234	**RD356820**	Carbon Resistor (chip)	8.2K 63M J				01
R0235	**RD355220**	Carbon Resistor (chip)	220.0 63M J				01
R0236	**RD356120**	Carbon Resistor (chip)	1.2K 63M J				01
R0237	**RD356470**	Carbon Resistor (chip)	4.7K 63M J				01
R0238	**RD356100**	Carbon Resistor (chip)	1.0K 63M J				01
R0239	**RD356270**	Carbon Resistor (chip)	2.7K 63M J				01
R0244	**RD350000**	Carbon Resistor (chip)	0 63M J				01
R0246	**RD350000**	Carbon Resistor (chip)	0 63M J				01
R0249	**RD356180**	Carbon Resistor (chip)	1.8K 63M J				01
-0252	**RD356180**	Carbon Resistor (chip)	1.8K 63M J				01
R0255	**RD356470**	Carbon Resistor (chip)	4.7K 63M J				01
-0258	**RD356470**	Carbon Resistor (chip)	4.7K 63M J				01
R0259	**RD356220**	Carbon Resistor (chip)	2.2K 63M J				01
-0262	**RD356220**	Carbon Resistor (chip)	2.2K 63M J				01
R0263	**RD357100**	Carbon Resistor (chip)	10.0K 63M J				01
R0264	**RD350000**	Carbon Resistor (chip)	0 63M J				01

∗: New Parts

RANK: Japan only

	REF NO.	PART NO.	DESCRIPTION			REMARKS		QTY	RANK
	R0265	**RD357100**	Carbon Resistor (chip)	10.0K 63M J					01
	R0266	**RD350000**	Carbon Resistor (chip)	0 63M J					01
	R0267	**RD357100**	Carbon Resistor (chip)	10.0K 63M J					01
	R0268	**RD356470**	Carbon Resistor (chip)	4.7K 63M J					01
	R0269	**RD356470**	Carbon Resistor (chip)	4.7K 63M J					01
	R0270	**RD357100**	Carbon Resistor (chip)	10.0K 63M J					01
	R0271	**RD356470**	Carbon Resistor (chip)	4.7K 63M J					01
	R0272	**RD356470**	Carbon Resistor (chip)	4.7K 63M J					01
	R0273	**RD356220**	Carbon Resistor (chip)	2.2K 63M J					01
	-0276	**RD356220**	Carbon Resistor (chip)	2.2K 63M J					01
	R0277	**RD355390**	Carbon Resistor (chip)	390.0 63M J					01
	R0278	**RD355390**	Carbon Resistor (chip)	390.0 63M J					01
	R0279	**RD356220**	Carbon Resistor (chip)	2.2K 63M J					01
	R0280	**RD355390**	Carbon Resistor (chip)	390.0 63M J					01
	R0281	**RD355390**	Carbon Resistor (chip)	390.0 63M J					01
	R0285	**RD350000**	Carbon Resistor (chip)	0 63M J					01
	R0296	**RD356100**	Carbon Resistor (chip)	1.0K 63M J					01
	R0297	**RD356100**	Carbon Resistor (chip)	1.0K 63M J					01
	R0300	**RD354470**	Carbon Resistor (chip)	47.0 63M J					01
	R0301	**RD354470**	Carbon Resistor (chip)	47.0 63M J					01
	R0307	**RD358100**	Carbon Resistor (chip)	100.0K 63M J					01
	R0308	**RD358100**	Carbon Resistor (chip)	100.0K 63M J					01
	R0311	**RD356100**	Carbon Resistor (chip)	1.0K 63M J					01
	R0312	**RD356100**	Carbon Resistor (chip)	1.0K 63M J					01
	R0337	**RD355100**	Carbon Resistor (chip)	100.0 63M J					01
	-0339	**RD355100**	Carbon Resistor (chip)	100.0 63M J					01
	R0347	**RD355100**	Carbon Resistor (chip)	100.0 63M J					01
	R0348	**RD350000**	Carbon Resistor (chip)	0 63M J					01
	R0370	**RD357220**	Carbon Resistor (chip)	22.0K 63M J					01
	RA001	**RE047100**	Resistor Array	10KX4					01
	RA002	**RE044680**	Resistor Array	68X4					01
	-004	**RE044680**	Resistor Array	68X4					01
	RA005	**RE047100**	Resistor Array	10KX4					01
	RA006	**RE047100**	Resistor Array	10KX4					01
	RA007	**RE044680**	Resistor Array	68X4					01
	RA008	**RE044680**	Resistor Array	68X4					01
	RA009	**RE047100**	Resistor Array	10KX4					01
	RA010	**RE047100**	Resistor Array	10KX4					01
	RA011	**RE044680**	Resistor Array	68X4					01
	RA012	**RE047100**	Resistor Array	10KX4					01
	RA013	**RE044680**	Resistor Array	68X4					01
	-026	**RE044680**	Resistor Array	68X4					01
	RA027	**RE047100**	Resistor Array	10KX4					01
	RA028	**RE044680**	Resistor Array	68X4					01
	RA029	**RE044680**	Resistor Array	68X4					01
	RA030	**RE047100**	Resistor Array	10KX4					01
	-032	**RE047100**	Resistor Array	10KX4					01
	SW001	**V3026900**	Jumper Wire	CHS-01 TA1		ON:J, OFF:U,B,E			02
	TR001	**VV925400**	Transistor	2SC2712 GR					01
	-003	**VV925400**	Transistor	2SC2712 GR					01
	TR004	**VJ927200**	Transistor	2SA1162 O,Y					01
	X0001	**V4093500**	Quartz Crystal Unit	6MHz SMD-49					03
	X0002	**VP864900**	Quartz Crystal Unit	16MHz SMD-49					04
	X0003	**VP864800**	Quartz Crystal Unit	11.2896MHz SMD-49					04
	X0005	**VP864900**	Quartz Crystal Unit	16MHz SMD-49					04
		V7712500	Circuit Board	FU120BL		U	(XS882A0)		07
		V7601300	Circuit Board	FU120BL		B,E	(XS882A0)		07
		--	Jumper Wire	0.55			(VD04170)		
⚠		**VT308100**	AC Inlet	2P CCT9302-0101M		B,E			02
⚠		**VT308200**	AC Inlet	CCT9302-0201		U			02
		LB201530	Fuse Holder	PC-FH1		U,B,E		2	01
⚠	C0001	**VY675000**	Capacitor	0.010 250V J.U.C.S					01
⚠	C0002	**VY675100**	Capacitor	4700P 250V J.U.C.S					01
⚠	C0003	**VY675100**	Capacitor	4700P 250V J.U.C.S					01
	CN001	**LB932030**	Base Post Connector	VH 3P TE					01
	CN002	**LB932060**	Base Post Connector	VH 6P TE					01
⚠	F0001	**KB003630**	Fuse	5.00A JU		U			01
⚠	F0001	**KB003080**	Fuse	2.50A S		B,E			01
	J0001	**--**	Jumper Wire	0.55		B,E	(VD04170)		

∗: New Parts

RANK: Japan only

	REF NO.	PART NO.	DESCRIPTION			REMARKS	QTY	RANK
	J0002	--	Jumper Wire	0.55		U (VD04170)		
	L0001	--	Jumper Wire	0.55		(VD04170)		
	L0003	**VF790900**	Coil	SU10V-D20010 10uH				03
*		**WA949800**	Circuit Board	HAMMER SW-L(EBUS)		(X3734A0)		
		--	Nonwoven Fabric Cloth	470X3.5X0.2T		(V612930)		
	C0001	**FG644100**	Ceramic Capacitor-F	0.0100 50V Z				01
	C0002	**FG651220**	Ceramic Capacitor-SL	22P 50V J				01
	-0005	**FG651220**	Ceramic Capacitor-SL	22P 50V J				01
	C0006	**VD930900**	Semiconductive Cera. Cap.	0.1000 25V M				01
	C0007	**UR818100**	Electrolytic Cap.	100.00 6.3V				01
	C0008	**VD930900**	Semiconductive Cera. Cap.	0.1000 25V M				01
	C0009	**FG652100**	Ceramic Capacitor-SL	100P 50V J				01
	C0010	**VH484100**	Ceramic Capacitor Array	100P 50V M				02
	CN001	**VB390800**	Connector Base Post	PH 12P TE				01
	CN002	**VB390300**	Connector Base Post	PH 7P TE				01
	CN003	**VB390400**	Connector Base Post	PH 8P TE				01
	CN004	**VB390600**	Connector Base Post	PH 10P TE				01
	D0005	**VB941200**	Diode	1SS133,1SS176				01
	-0082	**VB941200**	Diode	1SS133,1SS176				01
*	IC001	**X3703A00**	IC	HD64F3694		LKS		08
	R0001	**HF756100**	Carbon Resistor	1.0K 1/4 J				01
	R0002	**HF754470**	Carbon Resistor	47.0 1/4 J				01
	R0003	**HF754470**	Carbon Resistor	47.0 1/4 J				01
	R0004	**HF755100**	Carbon Resistor	100.0 1/4 J				01
	R0005	**HF754470**	Carbon Resistor	47.0 1/4 J				01
	R0006	**HF754470**	Carbon Resistor	47.0 1/4 J				01
	R0007	**HF757220**	Carbon Resistor	22.0K 1/4 J				01
	-0009	**HF757220**	Carbon Resistor	22.0K 1/4 J				01
	R0010	**HF755100**	Carbon Resistor	100.0 1/4 J				01
*	RA001	**WB190300**	Resistor Array	RGLD12X333J				01
*	X0001	**WA558900**	Ceramic Resonator	20.0M EF0MC2005T4Q				
		V6129600	Circuit Board	HAMMER SW-H		(XZ105A0)		11
		--	Nonwoven Fabric Cloth	745X3.5X0.2T		(V612920)		
	CN1	**VB390600**	Connector Base Post	PH 10P TE				01
	CN2	**VB390800**	Connector Base Post	PH 12P TE				01
	D1	**VB941200**	Diode	1SS133,1SS176				01
	-108	**VB941200**	Diode	1SS133,1SS176				01
*		**WA627200**	Circuit Board	HP		(XQ795A0,XT162A0)		
		--	Jumper Wire	0.55		(VD04170)		
	C0001	**FG644100**	Ceramic Capacitor-F	0.0100 50V Z				01
	-0005	**FG644100**	Ceramic Capacitor-F	0.0100 50V Z				01
	C0006	--	Jumper Wire	0.55		(VD04170)		
	C0007	--	Jumper Wire	0.55		(VD04170)		
	CN001	**VB858600**	Connector Base Post	PH 7P SE				01
	CN003	**LB919020**	Base Post Connector	XH 2P SE				01
	FL001	**VB835000**	Coil	FL5R200QNT 20uH				01
	-006	**VB835000**	Coil	FL5R200QNT 20uH				01
	FL001	**VB971100**	Coil	FL5R200QN 20uH				01
	-006	**VB971100**	Coil	FL5R200QN 20uH				01
	HP001	**LB101870**	Phone Jack	YKB21-5006		PHONES		03
	HP002	**LB101870**	Phone Jack	YKB21-5006		PHONES		03
	R0001	**V9295000**	Carbon Resistor	33.0 1/2 J				01
	-0004	**V9295000**	Carbon Resistor	33.0 1/2 J				01
	R0005	--	Jumper Wire	0.55		(VD04170)		
		--	Circuit Board	MA120B		U (V859630)(XZ588D0)		
		--	Circuit Board	MA120B		B,E (V859640)(XZ588D0)		
		VT740000	Support, PCB	3T-9 T=9			2	03
		VJ834500	Insulation Sheet	#1000				03
		--	Jumper Wire	0.55		(VD04170)		
⚠		**KB003630**	Fuse	5.00A JU		U	3	01
⚠		**KB003240**	Fuse	5.00A S		B,E	3	01
	C0001	**VA302600**	Ceramic Capacitor-E	0.0100 500V P				01
	-0003	**VA302600**	Ceramic Capacitor-E	0.0100 500V P				01
⚠	C0005	**VL232200**	Electrolytic Cap.	3300 50.0V				04
⚠	-0008	**VL232200**	Electrolytic Cap.	3300 50.0V				04
	C0010	**FG613100**	Ceramic Capacitor-B	1000P 50V K				01

*: New Parts

RANK: Japan only

	REF NO.	PART NO.	DESCRIPTION			REMARKS	QTY	RANK
	C0011	**UR866100**	Electrolytic Cap.	1.00 50.0V				01
	C0012	**FG612220**	Ceramic Capacitor-B	220P 50V K				01
	C0013	**UR838100**	Electrolytic Cap.	100.00 16.0V				01
	C0015	**UR868100**	Electrolytic Cap.	100.00 50.0V				01
	C0016	**UR867100**	Electrolytic Cap.	10.00 50.0V				01
	C0017	**UR867100**	Electrolytic Cap.	10.00 50.0V				01
	C0018	**UR868100**	Electrolytic Cap.	100.00 50.0V				01
	C0020	**UR838100**	Electrolytic Cap.	100.00 16.0V				01
	C0021	**FG612220**	Ceramic Capacitor-B	220P 50V K				01
	C0022	**FG613100**	Ceramic Capacitor-B	1000P 50V K				01
	C0023	**UR866100**	Electrolytic Cap.	1.00 50.0V				01
	C0025	**VC694800**	Semiconductive Cera. Cap.	0.1000 25V Z				01
	-0028	**VC694800**	Semiconductive Cera. Cap.	0.1000 25V Z				01
	C0029	**UR838100**	Electrolytic Cap.	100.00 16.0V				01
⚠	C0031	**VL232300**	Electrolytic Cap.	2200 25.0V				03
⚠	C0032	**VL232300**	Electrolytic Cap.	2200 25.0V				03
	C0033	**UR866100**	Electrolytic Cap.	1.00 50.0V				01
	-0036	**UR866100**	Electrolytic Cap.	1.00 50.0V				01
⚠	C0041	**V8297300**	Electrolytic Cap.	3900 35.0V				04
	C0042	**VC694800**	Semiconductive Cera. Cap.	0.1000 25V Z				01
	C0043	**FG644100**	Ceramic Capacitor-F	0.0100 50V Z				01
	C0043	**FG644100**	Ceramic Capacitor-F	0.0100 50V Z				01
⚠	C0044	**V8297400**	Electrolytic Cap.	1000 35.0V				02
	C0045	**VC694800**	Semiconductive Cera. Cap.	0.1000 25V Z				01
	C0047	**UR866330**	Electrolytic Cap.	3.30 50.0V				01
⚠	C0051	**V8297300**	Electrolytic Cap.	3900 35.0V				04
	C0052	**VC694800**	Semiconductive Cera. Cap.	0.1000 25V Z				01
	C0053	**FG644100**	Ceramic Capacitor-F	0.0100 50V Z				01
	C0053	**FG644100**	Ceramic Capacitor-F	0.0100 50V Z				01
	C0054	**V8297400**	Electrolytic Cap.	1000 35.0V				02
	C0055	**VC694800**	Semiconductive Cera. Cap.	0.1000 25V Z				01
	CN001	**LB932080**	Base Post Connector	VH 8P TE				01
	CN003	**LB918060**	Base Post Connector	XH 6P TE				01
	CN004	**LB918050**	Base Post Connector	XH 5P TE				01
	CN005	**LB932040**	Base Post Connector	VH 4P TE				01
	CN006	**VB390500**	Connector Base Post	PH 9P TE				03
	D0001	**VB481900**	Diode	11ES4				01
	-0005	**VB481900**	Diode	11ES4				01
	D0001	**V7803100**	Diode	1T4-T/A52				
	-0005	**V7803100**	Diode	1T4-T/A52				
	D0001	**V9362200**	Diode	1T4-T/A26				
	-0005	**V9362200**	Diode	1T4-T/A26				
	D0006	**V8107700**	Diode	RK46				
	D0007	**V8107700**	Diode	RK46				
⚠	DB001	**VQ111500**	Diode Stack	D3SBA20-4103 4.0A				03
⚠	DB002	**VQ111500**	Diode Stack	D3SBA20-4103 4.0A				03
⚠	DB003	**VR253700**	Diode Stack	S1NB20 1.0A 200V				02
	F0001	**VP206500**	Fuse Holder	EYF-52BC			2	01
	-0003	**VP206500**	Fuse Holder	EYF-52BC			2	01
	IC003	**XJ602A00**	IC	NJM78M12FA		REGULATOR +12V 0.5A		02
	IC004	**XD343A00**	IC	NJM79M12FA		REGULATOR -12V		03
	IC005	**X2192A00**	IC	STK402-090		POWER AMP. 60W 2CH		08
	IC006	**XT442A00**	IC	SI-8050S		REGULATOR +5V		05
	IC007	**XZ274A00**	IC	SI-8033S(LF1101)		REGULATOR +3.3V		05
	L1	**V6782600**	Choke Coil	100U ELC15E101FN				05
	L2	**V6782600**	Choke Coil	100U ELC15E101FN				05
⚠	R1	**VU253100**	Fuse Resistor	0.47 1/2 J				01
⚠	R2	**VU253100**	Fuse Resistor	0.47 1/2 J				01
	R3	**HF756100**	Carbon Resistor	1.0K 1/4 J				01
	R10	**HF755560**	Carbon Resistor	560.0 1/4 J				01
	R11	**HF757100**	Carbon Resistor	10.0K 1/4 J				01
	R12	**HF755390**	Carbon Resistor	390.0 1/4 J				01
	R13	**HF757100**	Carbon Resistor	10.0K 1/4 J				01
	R14	**HW095100**	Fuse Resistor	100.0 1/4 J				01
	R15	**HF757100**	Carbon Resistor	10.0K 1/4 J				01
	R20	**HW095100**	Fuse Resistor	100.0 1/4 J				01
	R21	**HF757100**	Carbon Resistor	10.0K 1/4 J				01
	R22	**HF755390**	Carbon Resistor	390.0 1/4 J				01
	R23	**HF755560**	Carbon Resistor	560.0 1/4 J				01
	R24	**HF757100**	Carbon Resistor	10.0K 1/4 J				01

∗: New Parts

RANK: Japan only

	REF NO.	PART NO.	DESCRIPTION			REMARKS	QTY	RANK
	R27	**VC742500**	Metal Oxide Film Resistor	10.0 1W J				01
	R28	**VC742500**	Metal Oxide Film Resistor	10.0 1W J				01
	R29	**HF757100**	Carbon Resistor	10.0K 1/4 J				01
	R30	**HF757100**	Carbon Resistor	10.0K 1/4 J				01
	R31	**HF756330**	Carbon Resistor	3.3K 1/4 J				01
	R32	**HF756330**	Carbon Resistor	3.3K 1/4 J				01
	RY001	**VK881200**	Relay	DC G5Z-2A-YA 12V				04
	TR002	**IC1815M0**	Transistor	2SC1815 Y,GR				01
	-004	**IC1815M0**	Transistor	2SC1815 Y,GR				01
*		**WA746200**	Circuit Board	MAF		(WA74610)(X2247D0)		
*		**WA746300**	Circuit Board	MIC		(WA74610)(X2247D0)		
		--	Jumper Wire	0.55		(VD04170)		
	C0005	**VK373000**	Electrolytic Cap.	4700 25.0V				03
	C0006	**VK373000**	Electrolytic Cap.	4700 25.0V				03
	C0007	**UR847470**	Electrolytic Cap.	47.00 25.0V				01
	C0008	**UR837220**	Electrolytic Cap.	22.00 16.0V				01
	C0009	**UR866100**	Electrolytic Cap.	1.00 50.0V				01
	C0010	**VE327200**	Monolithic Mylar Capacitor	1.0 50V J		}		02
	C0010	**VU838100**	Monolithic Mylar Capacitor	1.0000 50V J		}		
	C0011	**VE327200**	Monolithic Mylar Capacitor	1.0 50V J		}		02
	C0011	**VU838100**	Monolithic Mylar Capacitor	1.0000 50V J		}		
	C0012	**US063100**	Ceramic Capacitor-B (chip)	1000P 50V K				01
	C0013	**US063100**	Ceramic Capacitor-B (chip)	1000P 50V K				01
	C0014	**UR837220**	Electrolytic Cap.	22.00 16.0V				01
	C0015	**UR837220**	Electrolytic Cap.	22.00 16.0V				01
	C0016	**UR837470**	Electrolytic Cap.	47.00 16.0V				01
	C0017	**US035100**	Ceramic Capacitor-B (chip)	0.1000 16V K				01
	-0024	**US035100**	Ceramic Capacitor-B (chip)	0.1000 16V K				01
	C0025	**US126100**	Ceramic Capacitor-B (chip)	1.0000 10V Z				
	C0041	**UR866220**	Electrolytic Cap.	2.20 50.0V				01
	C0042	**US062100**	Ceramic Capacitor-SL(chip)	100P 50V J				01
	C0043	**US062470**	Ceramic Capacitor-SL(chip)	470P 50V J				01
	C0047	**US064100**	Ceramic Capacitor-B (chip)	0.0100 50V K				01
	C0051	**UR866220**	Electrolytic Cap.	2.20 50.0V				01
	C0052	**US062100**	Ceramic Capacitor-SL(chip)	100P 50V J				01
	C0053	**US062470**	Ceramic Capacitor-SL(chip)	470P 50V J				01
	C0057	**US064100**	Ceramic Capacitor-B (chip)	0.0100 50V K				01
	C0061	**UR866220**	Electrolytic Cap.	2.20 50.0V				01
	C0062	**US062100**	Ceramic Capacitor-SL(chip)	100P 50V J				01
	C0063	**US062470**	Ceramic Capacitor-SL(chip)	470P 50V J				01
	C0064	**US044220**	Ceramic Capacitor-B (chip)	0.0220 25V K				01
	C0065	**US044220**	Ceramic Capacitor-B (chip)	0.0220 25V K				01
	C0066	**US034470**	Ceramic Capacitor-B (chip)	0.0470 16V K				01
	C0067	**US064100**	Ceramic Capacitor-B (chip)	0.0100 50V K				01
	C0071	**UR866220**	Electrolytic Cap.	2.20 50.0V				01
	C0072	**US062100**	Ceramic Capacitor-SL(chip)	100P 50V J				01
	C0073	**US062470**	Ceramic Capacitor-SL(chip)	470P 50V J				01
	C0077	**US064100**	Ceramic Capacitor-B (chip)	0.0100 50V K				01
	C0081	**US063100**	Ceramic Capacitor-B (chip)	1000P 50V K				01
	C0082	**UR866100**	Electrolytic Cap.	1.00 50.0V				01
	C0083	**US064100**	Ceramic Capacitor-B (chip)	0.0100 50V K				01
	C0091	**US063100**	Ceramic Capacitor-B (chip)	1000P 50V K				01
	C0092	**UR866100**	Electrolytic Cap.	1.00 50.0V				01
	C0093	**US064100**	Ceramic Capacitor-B (chip)	0.0100 50V K				01
	C0101	**US064100**	Ceramic Capacitor-B (chip)	0.0100 50V K				01
	C0102	**US064100**	Ceramic Capacitor-B (chip)	0.0100 50V K				01
	C0111	**US064100**	Ceramic Capacitor-B (chip)	0.0100 50V K				01
	C0112	**US064100**	Ceramic Capacitor-B (chip)	0.0100 50V K				01
	C0121	**US064100**	Ceramic Capacitor-B (chip)	0.0100 50V K				01
	C0122	**US064100**	Ceramic Capacitor-B (chip)	0.0100 50V K				01
	C0131	**US064100**	Ceramic Capacitor-B (chip)	0.0100 50V K				01
	C0132	**US064100**	Ceramic Capacitor-B (chip)	0.0100 50V K				01
	C0141	**UR838100**	Electrolytic Cap.	100.00 16.0V				01
	C0142	**US064100**	Ceramic Capacitor-B (chip)	0.0100 50V K				01
	C0143	**UR838100**	Electrolytic Cap.	100.00 16.0V				01
	C0144	**US064100**	Ceramic Capacitor-B (chip)	0.0100 50V K				01
	CN001	**VB390100**	Connector Base Post	PH 5P TE				01
	CN002	**LB932030**	Base Post Connector	VH 3P TE				01
	CN003	**LB932040**	Base Post Connector	VH 4P TE				01

∗: New Parts

RANK: Japan only

REF NO.	PART NO.	DESCRIPTION			REMARKS	QTY	RANK
CN010	**VB390300**	Connector Base Post	PH 7P TE				01
CN011	**LB918040**	Base Post Connector	XH 4P TE				01
CN012	**VB390000**	Base Post Connector	PH 4P TE				01
D0001	**VS201100**	Diode	D1F60				01
-0004	**VS201100**	Diode	D1F60				01
D0005	**VV925900**	Diode	RLS-73 TE-11				01
D0006	**VV925900**	Diode	RLS-73 TE-11				01
D0140	**VB493900**	Diode	MA221				01
DB001	**VN011300**	Diode Stack	D3SBA20 4.0A 200V				03
EM031	**VD542700**	LC Filter	DSS6NF31C223Q93A				01
EM032	**VD542700**	LC Filter	DSS6NF31C223Q93A				01
F0001	**VP206500**	Fuse Holder	EYF-52BC			2	01
IC001	**XU131A00**	IC	TA8233H BTL		POWER AMP 20Wx2		06
IC010	**XF291A00**	IC	UPC4570G2		OP AMP		03
-013	**XF291A00**	IC	UPC4570G2		OP AMP		03
IC014	**XJ598A00**	IC	NJM78L05UA		REGULATOR +5V		02
R0002	**RD357100**	Carbon Resistor (chip)	10.0K 63M J				01
R0005	**RD357100**	Carbon Resistor (chip)	10.0K 63M J				01
R0007	**RD356560**	Carbon Resistor (chip)	5.6K 63M J				01
R0008	**RD356560**	Carbon Resistor (chip)	5.6K 63M J				01
R0009	**RD356330**	Carbon Resistor (chip)	3.3K 63M J				01
R0010	**RD356330**	Carbon Resistor (chip)	3.3K 63M J				01
R0011	**RD357470**	Carbon Resistor (chip)	47.0K 63M J				01
R0012	**RD357270**	Carbon Resistor (chip)	27.0K 63M J				01
R0013	**RD356330**	Carbon Resistor (chip)	3.3K 63M J				01
R0014	**RD356560**	Carbon Resistor (chip)	5.6K 63M J				01
R0015	**RD356560**	Carbon Resistor (chip)	5.6K 63M J				01
R0016	**RD356100**	Carbon Resistor (chip)	1.0K 63M J				01
R0017	**RD356100**	Carbon Resistor (chip)	1.0K 63M J				01
R0018	**RD355560**	Carbon Resistor (chip)	560.0 63M J				01
R0019	**RD355560**	Carbon Resistor (chip)	560.0 63M J				01
R0021	**RD354100**	Carbon Resistor (chip)	10.0 63M J				01
-0024	**RD354100**	Carbon Resistor (chip)	10.0 63M J				01
R0030	**RD357100**	Carbon Resistor (chip)	10.0K 63M J				01
R0040	**RD356220**	Carbon Resistor (chip)	2.2K 63M J				01
R0042	**RD356220**	Carbon Resistor (chip)	2.2K 63M J				01
R0043	**RD356680**	Carbon Resistor (chip)	6.8K 63M J				01
R0048	**RD356100**	Carbon Resistor (chip)	1.0K 63M J				01
R0049	**RD356470**	Carbon Resistor (chip)	4.7K 63M J				01
R0050	**RD356220**	Carbon Resistor (chip)	2.2K 63M J				01
R0052	**RD356220**	Carbon Resistor (chip)	2.2K 63M J				01
R0054	**RD356680**	Carbon Resistor (chip)	6.8K 63M J				01
R0058	**RD356100**	Carbon Resistor (chip)	1.0K 63M J				01
R0059	**RD356470**	Carbon Resistor (chip)	4.7K 63M J				01
R0060	**RD356220**	Carbon Resistor (chip)	2.2K 63M J				01
R0062	**RD356220**	Carbon Resistor (chip)	2.2K 63M J				01
R0063	**RD356820**	Carbon Resistor (chip)	8.2K 63M J				01
R0064	**RD357120**	Carbon Resistor (chip)	12.0K 63M J				01
R0065	**RD357120**	Carbon Resistor (chip)	12.0K 63M J				01
R0066	**RD357330**	Carbon Resistor (chip)	33.0K 63M J				01
R0067	**RD357100**	Carbon Resistor (chip)	10.0K 63M J				01
R0068	**RD356100**	Carbon Resistor (chip)	1.0K 63M J				01
R0069	**RD356470**	Carbon Resistor (chip)	4.7K 63M J				01
R0070	**RD356220**	Carbon Resistor (chip)	2.2K 63M J				01
R0072	**RD356220**	Carbon Resistor (chip)	2.2K 63M J				01
R0073	**RD356820**	Carbon Resistor (chip)	8.2K 63M J				01
R0074	**RD357120**	Carbon Resistor (chip)	12.0K 63M J				01
R0075	**RD357120**	Carbon Resistor (chip)	12.0K 63M J				01
R0076	**RD357330**	Carbon Resistor (chip)	33.0K 63M J				01
R0077	**RD357120**	Carbon Resistor (chip)	12.0K 63M J				01
R0078	**RD356100**	Carbon Resistor (chip)	1.0K 63M J				01
R0079	**RD356470**	Carbon Resistor (chip)	4.7K 63M J				01
R0081	**RD356470**	Carbon Resistor (chip)	4.7K 63M J				01
R0082	**RD356100**	Carbon Resistor (chip)	1.0K 63M J				01
R0091	**RD356470**	Carbon Resistor (chip)	4.7K 63M J				01
R0092	**RD356100**	Carbon Resistor (chip)	1.0K 63M J				01
RY001	**VK881200**	Relay	DC G5Z-2A-YA 12V				04
TR001	**VV556400**	Transistor	2SC2412K Q,R,S				01
-003	**VV556400**	Transistor	2SC2412K Q,R,S				01
ZD081	**V9312600**	Zener Diode	HZU2.2BTRF 2.2V				01

∗: New Parts

RANK: Japan only

REF NO.	PART NO.	DESCRIPTION			REMARKS	QTY	RANK
ZD082	**V9312600**	Zener Diode	HZU2.2BTRF 2.2V				01
ZD091	**V9312600**	Zener Diode	HZU2.2BTRF 2.2V				01
ZD092	**V9312600**	Zener Diode	HZU2.2BTRF 2.2V				01
	V7708200	Circuit Board	NET1		(XT123B0)		05
	--	Jumper Wire	0.55		(VD04170)		
C0001	**VU643600**	Electrolytic Cap.-BP	1.00UF 63.0V				01
C0002	**VU643600**	Electrolytic Cap.-BP	1.00UF 63.0V				01
CN001	**LB932040**	Base Post Connector	VH 4P TE				01
CN002	**LB932080**	Base Post Connector	VH 8P TE				01
	V2455000	Circuit Board	NETWORK		(XV011A0)		11
	--	Jumper Wire	0.55		(VD04170)		
C0001	**VS677800**	Electrolytic Cap.-BP	4.70UF 63.0V				01
C0001	**V5928800**	Electrolytic Cap.-BP	4.70 63.0V				01
C0002	**VS677800**	Electrolytic Cap.-BP	4.70UF 63.0V				01
C0002	**V5928800**	Electrolytic Cap.-BP	4.70 63.0V				01
CN001	**LB932040**	Base Post Connector	VH 4P TE				01
CN002	**LB932080**	Base Post Connector	VH 8P TE				01
L0001	**GD301770**	Network Coil	0.35mm 0.9mm				05
L0002	**GD301770**	Network Coil	0.35mm 0.9mm				05
	V7675600	Circuit Board	PEDAL		(X0193A0)		07
J	**--**	Jumper Wire	0.55		(VD04170)		
CN001	**VB858500**	Connector Base Post	PH 6P SE				01
*	**WB152200**	Circuit Board	PNL		(X2243D0)		
10	**--**	GND Wire	1 L=50		(WB17250)		
C0031	**US064100**	Ceramic Capacitor-B (chip)	0.0100 50V K				01
-0034	**US064100**	Ceramic Capacitor-B (chip)	0.0100 50V K				01
C0035	**UM378100**	Electrolytic Cap.	100.00 10.0V				01
C0036	**US064100**	Ceramic Capacitor-B (chip)	0.0100 50V K				01
C0037	**UM378100**	Electrolytic Cap.	100.00 10.0V				01
C0041	**US064100**	Ceramic Capacitor-B (chip)	0.0100 50V K				01
C0042	**UM378100**	Electrolytic Cap.	100.00 10.0V				01
C0051	**US062470**	Ceramic Capacitor-SL(chip)	470P 50V J				01
-0056	**US062470**	Ceramic Capacitor-SL(chip)	470P 50V J				01
C0060	**VV020100**	Electrolytic Cap.	220.00 10.0V				01
C0061	**US062470**	Ceramic Capacitor-SL(chip)	470P 50V J				01
-0068	**US062470**	Ceramic Capacitor-SL(chip)	470P 50V J				01
C0069	**US064100**	Ceramic Capacitor-B (chip)	0.0100 50V K				01
C0071	**RD358470**	Carbon Resistor (chip)	470.0K 63M J				01
-0074	**RD358470**	Carbon Resistor (chip)	470.0K 63M J				01
C0102	**US061680**	Ceramic Capacitor-SL(chip)	68P 50V J				01
C0103	**US061680**	Ceramic Capacitor-SL(chip)	68P 50V J				01
C0105	**US064100**	Ceramic Capacitor-B (chip)	0.0100 50V K				01
C0106	**VV020100**	Electrolytic Cap.	220.00 10.0V				01
C0107	**US064100**	Ceramic Capacitor-B (chip)	0.0100 50V K				01
C0108	**RD350000**	Carbon Resistor (chip)	0 63M J				01
C0109	**RD350000**	Carbon Resistor (chip)	0 63M J				01
C0119	**US063100**	Ceramic Capacitor-B (chip)	1000P 50V K				01
C0200	**US064100**	Ceramic Capacitor-B (chip)	0.0100 50V K				01
C0201	**US064100**	Ceramic Capacitor-B (chip)	0.0100 50V K				01
CN033	**VB858200**	Connector Base Post	PH 3P SE				01
CN070	**VB389600**	Connector Base Post	PH 11P SE				01
CN080	**VB858800**	Connector Base Post	PH 9P SE				01
CN101	**VB858600**	Connector Base Post	PH 7P SE				01
D0030	**VB493900**	Diode	MA221				01
-0032	**VB493900**	Diode	MA221				01
D0030	**VV925900**	Diode	RLS-73 TE-11				01
-0032	**VV925900**	Diode	RLS-73 TE-11				01
D0040	**VB493900**	Diode	MA221				01
-0047	**VB493900**	Diode	MA221				01
D0040	**VV925900**	Diode	RLS-73 TE-11				01
-0047	**VV925900**	Diode	RLS-73 TE-11				01
D0050	**VB493900**	Diode	MA221				01
-0057	**VB493900**	Diode	MA221				01
D0050	**VV925900**	Diode	RLS-73 TE-11				01
-0057	**VV925900**	Diode	RLS-73 TE-11				01
D0101	**VB493900**	Diode	MA221				01

*: New Parts

RANK: Japan only

REF NO.	PART NO.	DESCRIPTION			REMARKS	QTY	RANK
-0107	**VB493900**	Diode	MA221				01
D0101	**VV925900**	Diode	RLS-73 TE-11				01
-0107	**VV925900**	Diode	RLS-73 TE-11				01
D0112	**VB493900**	Diode	MA221				01
-0115	**VB493900**	Diode	MA221				01
D0112	**VV925900**	Diode	RLS-73 TE-11				01
-0115	**VV925900**	Diode	RLS-73 TE-11				01
IC010	**XZ916100**	IC	UPD780031AYGK-N01		LED DRIVER/SWITCH SCAN.		05
IC071	**V8074800**	FET	MCH6616-TL				02
IC072	**V8074800**	FET	MCH6616-TL				02
IC073	**XF291A00**	IC	UPC4570G2		OP AMP		03
LD050	**VU067800**	LED	SEL6210S-TP5		METRONOME START/STOP		01
LD052	**VU067800**	LED	SEL6210S-TP5		SONG START/STOP		01
LD053	**VU067800**	LED	SEL6210S-TP5		REC		01
LD061	**V8066800**	LED	SML72423CTP15		TRACK 1		01
LD062	**V8066800**	LED	SML72423CTP15		TRACK 2		01
LD063	**V8066800**	LED	SML72423CTP15		EXTRA TRACKS		01
L0101	**GE901870**	Coil	SN3-205B 10uH				03
L0106	**VY657200**	Chip Inductance	600 BK1608HM601				01
-0110	**VY657200**	Chip Inductance	600 BK1608HM601				01
R0031	**RD356100**	Carbon Resistor (chip)	1.0K 63M J				01
R0032	**RD356100**	Carbon Resistor (chip)	1.0K 63M J				01
R0051	**RD357100**	Carbon Resistor (chip)	10.0K 63M J				01
-0056	**RD357100**	Carbon Resistor (chip)	10.0K 63M J				01
R0061	**RD155100**	Carbon Resistor (chip)	100.0 1/4 J				01
-0066	**RD155100**	Carbon Resistor (chip)	100.0 1/4 J				01
R0067	**RD154470**	Carbon Resistor (chip)	47.0 1/4 J				01
R0068	**RD155100**	Carbon Resistor (chip)	100.0 1/4 J				01
R0070	**RD357100**	Carbon Resistor (chip)	10.0K 63M J				01
-0080	**RD357100**	Carbon Resistor (chip)	10.0K 63M J				01
R0081	**RD354470**	Carbon Resistor (chip)	47.0 63M J				01
-0084	**RD354470**	Carbon Resistor (chip)	47.0 63M J				01
R0101	**RD356100**	Carbon Resistor (chip)	1.0K 63M J				01
R0102	**RD354470**	Carbon Resistor (chip)	47.0 63M J				01
R0103	**RD354470**	Carbon Resistor (chip)	47.0 63M J				01
R0104	**RD355100**	Carbon Resistor (chip)	100.0 63M J				01
R0105	**VI197400**	Metal Film Resistor (chip)	10.0K 1/10 D				01
R0106	**VI197400**	Metal Film Resistor (chip)	10.0K 1/10 D				01
SW030	**VV439800**	Tact Switch	SKQNAJ		SONG SELECT >>		01
SW030	**V8889300**	Push Switch	EVQ 11Y 07K				01
SW031	**VV439800**	Tact Switch	SKQNAJ		SONG SELECT <<		01
SW031	**V8889300**	Push Switch	EVQ 11Y 07K				01
SW032	**VV439800**	Tact Switch	SKQNAJ		DEMO		01
SW032	**V8889300**	Push Switch	EVQ 11Y 07K				01
SW040	**VV439800**	Tact Switch	SKQNAJ		TOP		01
SW040	**V8889300**	Push Switch	EVQ 11Y 07K				01
SW041	**VV439800**	Tact Switch	SKQNAJ		TRACK 1		01
SW041	**V8889300**	Push Switch	EVQ 11Y 07K				01
SW042	**VV439800**	Tact Switch	SKQNAJ		TRACK 2		01
SW042	**V8889300**	Push Switch	EVQ 11Y 07K				01
SW043	**VV439800**	Tact Switch	SKQNAJ		EXTRA TRACKS		01
SW043	**V8889300**	Push Switch	EVQ 11Y 07K				01
SW044	**VV439800**	Tact Switch	SKQNAJ		REC		01
SW044	**V8889300**	Push Switch	EVQ 11Y 07K				01
SW045	**VV439800**	Tact Switch	SKQNAJ		SONG START/STOP		01
SW045	**V8889300**	Push Switch	EVQ 11Y 07K				01
SW046	**VV439800**	Tact Switch	SKQNAJ		FILE		01
SW046	**V8889300**	Push Switch	EVQ 11Y 07K				01
SW047	**VV439800**	Tact Switch	SKQNAJ		SONG SETTING		01
SW047	**V8889300**	Push Switch	EVQ 11Y 07K				01
SW050	**VV439800**	Tact Switch	SKQNAJ		METRONOME START/STOP		01
SW050	**V8889300**	Push Switch	EVQ 11Y 07K				01
SW051	**VV439800**	Tact Switch	SKQNAJ		METRONOME SETTING		01
SW051	**V8889300**	Push Switch	EVQ 11Y 07K				01
SW052	**VV439800**	Tact Switch	SKQNAJ		LCD A -		01
SW052	**V8889300**	Push Switch	EVQ 11Y 07K				01
SW053	**VV439800**	Tact Switch	SKQNAJ		LCD A +		01
SW053	**V8889300**	Push Switch	EVQ 11Y 07K				01
SW054	**VV439800**	Tact Switch	SKQNAJ		LCD C +		01
SW054	**V8889300**	Push Switch	EVQ 11Y 07K				01

∗: New Parts

RANK: Japan only

	REF NO.	PART NO.	DESCRIPTION		REMARKS	QTY	RANK
	SW055	**VV439800**	Tact Switch	SKQNAJ	LCD C -		01
	SW055	**V8889300**	Push Switch	EVQ 11Y 07K			01
	SW056	**VV439800**	Tact Switch	SKQNAJ	TEMPO UP		01
	SW056	**V8889300**	Push Switch	EVQ 11Y 07K			01
	SW057	**VV439800**	Tact Switch	SKQNAJ	TEMPO DOWN		01
	SW057	**V8889300**	Push Switch	EVQ 11Y 07K			01
	TA060	**VT943400**	Transistor Array	TD62785F(TP1)			04
	TA060	**V8566600**	Transistor Array	TD62785F(EL)			
	VR030	**V8576200**	Slide Variable Resistor	B10.0K RS30111D9	SONG BALANCE		03
	X0010	**V6091100**	Ceramic Resonator	8.38M EFOMC8384T4			01
*		**WB151900**	Circuit Board	PNR	(WB15180)(X2244B0)		
*		**WB152000**	Circuit Board	MV1	(WB15180)(X2244B0)		
		--	Jumper Wire	0.55	(VD04170)		
	10	**--**	GND Wire	2 L=140	(WB17260)		
	C0091	**UM378100**	Electrolytic Cap.	100.00 10.0V			01
	C0092	**VC694800**	Semiconductive Cera. Cap.	0.1000 25V Z			01
	CN023	**VB390400**	Connector Base Post	PH 8P TE			01
	CN024	**VB389900**	Connector Base Post	PH 3P TE			01
	CN071	**VB389600**	Connector Base Post	PH 11P SE			01
	CN081	**VB858800**	Connector Base Post	PH 9P SE			01
	CN091	**VB858800**	Connector Base Post	PH 9P SE			01
	CN092	**VB858700**	Connector Base Post	PH 8P SE			01
	CN093	**V5492000**	FFC Connector	52807 16P SE			01
	D0000	**VD631600**	Diode	1SS133,176,HSS104			01
	-0008	**VD631600**	Diode	1SS133,176,HSS104			01
	D0010	**VD631600**	Diode	1SS133,176,HSS104			01
	-0018	**VD631600**	Diode	1SS133,176,HSS104			01
	D0020	**VD631600**	Diode	1SS133,176,HSS104			01
	-0028	**VD631600**	Diode	1SS133,176,HSS104			01
	D0033	**VD631600**	Diode	1SS133,176,HSS104			01
	-0038	**VD631600**	Diode	1SS133,176,HSS104			01
	LD000	**VU067800**	LED	SEL6210S-TP5	SPLIT		01
	LD001	**VU067800**	LED	SEL6210S-TP5	REVERB		01
	LD002	**VU067800**	LED	SEL6210S-TP5	CHORUS		01
	LD003	**VU067800**	LED	SEL6210S-TP5	AFC ON/OFF		01
	LD010	**VU067800**	LED	SEL6210S-TP5	GUITAR		01
	LD011	**VU067800**	LED	SEL6210S-TP5	XG		01
	LD012	**VU067800**	LED	SEL6210S-TP5	E.BASS		01
	LD013	**VU067800**	LED	SEL6210S-TP5	VIBRAPHONE		01
	LD020	**VU067800**	LED	SEL6210S-TP5	HARPSICHORD		01
	LD021	**VU067800**	LED	SEL6210S-TP5	SYNTH.PAD		01
	LD022	**VU067800**	LED	SEL6210S-TP5	WOOD BASS		01
	LD023	**VU067800**	LED	SEL6210S-TP5	E.CLAVICHORD		01
	LD030	**VU067800**	LED	SEL6210S-TP5	E.PIANO 1		01
	LD031	**VU067800**	LED	SEL6210S-TP5	STRINGS		01
	LD032	**VU067800**	LED	SEL6210S-TP5	CHOIR		01
	LD033	**VU067800**	LED	SEL6210S-TP5	E.PIANO 2		01
	LD040	**VU067800**	LED	SEL6210S-TP5	GRAND PIANO 1		01
	LD041	**VU067800**	LED	SEL6210S-TP5	CHURCH ORGAN		01
	LD042	**VU067800**	LED	SEL6210S-TP5	JAZZ ORGAN		01
	LD043	**VU067800**	LED	SEL6210S-TP5	GRAND PIANO 2		01
	R0090	**HF756100**	Carbon Resistor	1.0K 1/4 J			01
	R0091	**HF756820**	Carbon Resistor	8.2K 1/4 J			01
	R0092	**HF757270**	Carbon Resistor	27.0K 1/4 J			01
	R0093	**HF756100**	Carbon Resistor	1.0K 1/4 J			01
	R0094	**HF757270**	Carbon Resistor	27.0K 1/4 J			01
	R0095	**HF756100**	Carbon Resistor	1.0K 1/4 J			01
	SW000	**VV439800**	Tact Switch	SKQNAJ	SPLIT		01
	SW000	**V8889300**	Push Switch	EVQ 11Y 07K			01
	SW001	**VV439800**	Tact Switch	SKQNAJ	REVERB		01
	SW001	**V8889300**	Push Switch	EVQ 11Y 07K			01
	SW002	**VV439800**	Tact Switch	SKQNAJ	CHORUS		01
	SW002	**V8889300**	Push Switch	EVQ 11Y 07K			01
	SW003	**VV439800**	Tact Switch	SKQNAJ	AFC ON/OFF		01
	SW003	**V8889300**	Push Switch	EVQ 11Y 07K			01
	SW004	**VV439800**	Tact Switch	SKQNAJ	MIDI SETTING		01
	SW004	**V8889300**	Push Switch	EVQ 11Y 07K			01
	SW005	**VV439800**	Tact Switch	SKQNAJ	OTHER SETTING		01
	SW005	**V8889300**	Push Switch	EVQ 11Y 07K			01

*: New Parts

RANK: Japan only

REF NO.	PART NO.	DESCRIPTION			REMARKS	QTY	RANK
SW006	**VV439800**	Tact Switch	SKQNAJ		BRILLIANCE BRIGHT		01
SW006	**V8889300**	Push Switch	EVQ 11Y 07K				01
SW007	**VV439800**	Tact Switch	SKQNAJ		BRILLIANCE MELLOW		01
SW007	**V8889300**	Push Switch	EVQ 11Y 07K				01
SW008	**VV439800**	Tact Switch	SKQNAJ		VARIATION UP		01
SW008	**V8889300**	Push Switch	EVQ 11Y 07K				01
SW010	**VV439800**	Tact Switch	SKQNAJ		GUITAR		01
SW010	**V8889300**	Push Switch	EVQ 11Y 07K				01
SW011	**VV439800**	Tact Switch	SKQNAJ		XG		01
SW011	**V8889300**	Push Switch	EVQ 11Y 07K				01
SW012	**VV439800**	Tact Switch	SKQNAJ		E.BASS		01
SW012	**V8889300**	Push Switch	EVQ 11Y 07K				01
SW013	**VV439800**	Tact Switch	SKQNAJ		VIBRAPHONE		01
SW013	**V8889300**	Push Switch	EVQ 11Y 07K				01
SW014	**VV439800**	Tact Switch	SKQNAJ		AFC SETTING		01
SW014	**V8889300**	Push Switch	EVQ 11Y 07K				01
SW015	**VV439800**	Tact Switch	SKQNAJ		WOOD BASS		01
SW015	**V8889300**	Push Switch	EVQ 11Y 07K				01
SW016	**VV439800**	Tact Switch	SKQNAJ		E.CLAVICHORD		01
SW016	**V8889300**	Push Switch	EVQ 11Y 07K				01
SW017	**VV439800**	Tact Switch	SKQNAJ		VOICE SETTING		01
SW017	**V8889300**	Push Switch	EVQ 11Y 07K				01
SW018	**VV439800**	Tact Switch	SKQNAJ		VARIATION DOWN		01
SW018	**V8889300**	Push Switch	EVQ 11Y 07K				01
SW020	**VV439800**	Tact Switch	SKQNAJ		HARPSICHORD		01
SW020	**V8889300**	Push Switch	EVQ 11Y 07K				01
SW021	**VV439800**	Tact Switch	SKQNAJ		SYNTH.PAD		01
SW021	**V8889300**	Push Switch	EVQ 11Y 07K				01
SW022	**VV439800**	Tact Switch	SKQNAJ		CHOIR		01
SW022	**V8889300**	Push Switch	EVQ 11Y 07K				01
SW023	**VV439800**	Tact Switch	SKQNAJ		E.PIANO 2		01
SW023	**V8889300**	Push Switch	EVQ 11Y 07K				01
SW024	**VV439800**	Tact Switch	SKQNAJ		E.PIANO 1		01
SW024	**V8889300**	Push Switch	EVQ 11Y 07K				01
SW025	**VV439800**	Tact Switch	SKQNAJ		STRINGS		01
SW025	**V8889300**	Push Switch	EVQ 11Y 07K				01
SW026	**VV439800**	Tact Switch	SKQNAJ		JAZZ ORGAN		01
SW026	**V8889300**	Push Switch	EVQ 11Y 07K				01
SW027	**VV439800**	Tact Switch	SKQNAJ		GRAND PIANO 2		01
SW027	**V8889300**	Push Switch	EVQ 11Y 07K				01
SW028	**VV439800**	Tact Switch	SKQNAJ		GRAND PIANO 1		01
SW028	**V8889300**	Push Switch	EVQ 11Y 07K				01
SW033	**VV439800**	Tact Switch	SKQNAJ		LCD D -		01
SW033	**V8889300**	Push Switch	EVQ 11Y 07K				01
SW034	**VV439800**	Tact Switch	SKQNAJ		LCD B -		01
SW034	**V8889300**	Push Switch	EVQ 11Y 07K				01
SW035	**VV439800**	Tact Switch	SKQNAJ		LCD B +		01
SW035	**V8889300**	Push Switch	EVQ 11Y 07K				01
SW036	**VV439800**	Tact Switch	SKQNAJ		LCD D +		01
SW036	**V8889300**	Push Switch	EVQ 11Y 07K				01
SW037	**VV439800**	Tact Switch	SKQNAJ		EDIT		01
SW037	**V8889300**	Push Switch	EVQ 11Y 07K				01
SW038	**VV439800**	Tact Switch	SKQNAJ		CHURCH ORGAN		01
SW038	**V8889300**	Push Switch	EVQ 11Y 07K				01
TR091	**IC174020**	Transistor	2SC1740S R,S				01
TR092	**IC174020**	Transistor	2SC1740S R,S				01
TR093	**VP872600**	Transistor	2SA1708 S,T				01
VR023	**V8669400**	Rotary Variable Resistor	B 10.0K XVB93GN		MASTER VOLUME		04
VR090	**VS368200**	Rotary Variable Resistor	B10K RK09K1130BN7A		CONTRAST		01
*	**WA950400**	Circuit Board	RELAY		(XZ363B0)		
CN1	**VB390300**	Connector Base Post	PH 7P TE				01
CN3	**VB390300**	Connector Base Post	PH 7P TE				01
	V8563200	Circuit Board	WMH		(X2248A0)		16
C0001	**US064100**	Ceramic Capacitor-B (chip)	0.0100 50V K				01
C0003	**US135100**	Ceramic Capacitor-F (chip)	0.1000 16V Z				01
C0005	**US064100**	Ceramic Capacitor-B (chip)	0.0100 50V K				01
C0007	**US135100**	Ceramic Capacitor-F (chip)	0.1000 16V Z				01
C0017	**UF018100**	Electrolytic Cap. (chip)	100 6.3V				01

*: New Parts

RANK: Japan only

	REF NO.	PART NO.	DESCRIPTION			REMARKS	QTY	RANK
	CN001	**V8389100**	Connector	52901 60P TE				05
	IC002	**X2563100**	IC			ROM 128M WAVE-H1		16
	IC004	**X2564100**	IC			ROM 128M WAVE-H2		16
		V8563100	Circuit Board	WML		(X2248A0)		16
	C0001	**US064100**	Ceramic Capacitor-B (chip)	0.0100 50V K				01
	C0003	**US135100**	Ceramic Capacitor-F (chip)	0.1000 16V Z				01
	C0005	**US064100**	Ceramic Capacitor-B (chip)	0.0100 50V K				01
	C0007	**US135100**	Ceramic Capacitor-F (chip)	0.1000 16V Z				01
	C0017	**UF018100**	Electrolytic Cap. (chip)	100 6.3V				01
	CN001	**V8389100**	Connector	52901 60P TE				05
	IC002	**X2561100**	IC			ROM 128M WAVE-L1		16
	IC004	**X2562100**	IC			ROM 128M WAVE-L2		16
		JE000270	Capacitor Microphone	WM-34C		AFC	4	03
		XU755A00	Speaker	3.0cm 8 ohm 60W		MONITOR	2	10
		X0358A00	Speaker	16cm 8 ohm 60W		WOOFER	2	10
		X3438A00	Speaker	5.0cm 24 ohm 60W		TWEETER	2	07
		X2556A00	Speaker	10.0cm 4 ohm 25W		AFC	2	08
		V8811300	LCD	SCLCMDYAMS0049				14
⚠		**X2402A00**	Power Transformer	IEC/EN60691 E UL/C				17
⚠		**KB003630**	Fuse	5.00A JU		U		01
⚠		**KB003240**	Fuse	5.00A S		E,B		01
		VJ470400	Micro Switch	AH75537		Roof switch		05
⚠		**V8625100**	Push Switch	SY17-23-2(U1S1)/T		POWER		04
		V6492300	Floppy Disk Drive	ALPS DF354H 3.5"				13
		HS412520	Rotary Variable Resistor	RK16Y11L0001A		Pedal volume	3	05

∗: New Parts

RANK: Japan only

■ CLP-175 BLOCK DIAGRAM

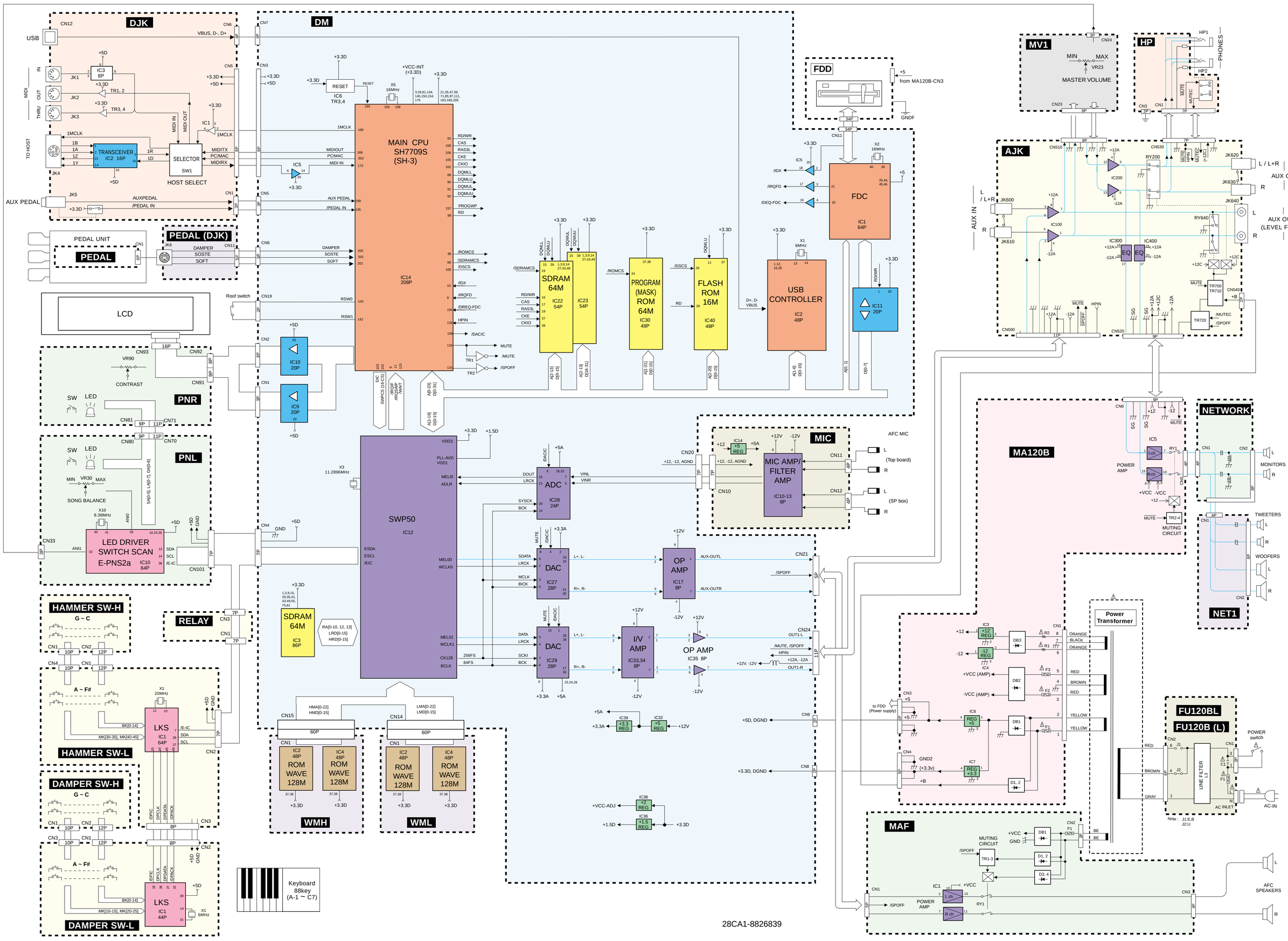

■ CLP-175 CIRCUIT BOARD LAYOUT & WIRING

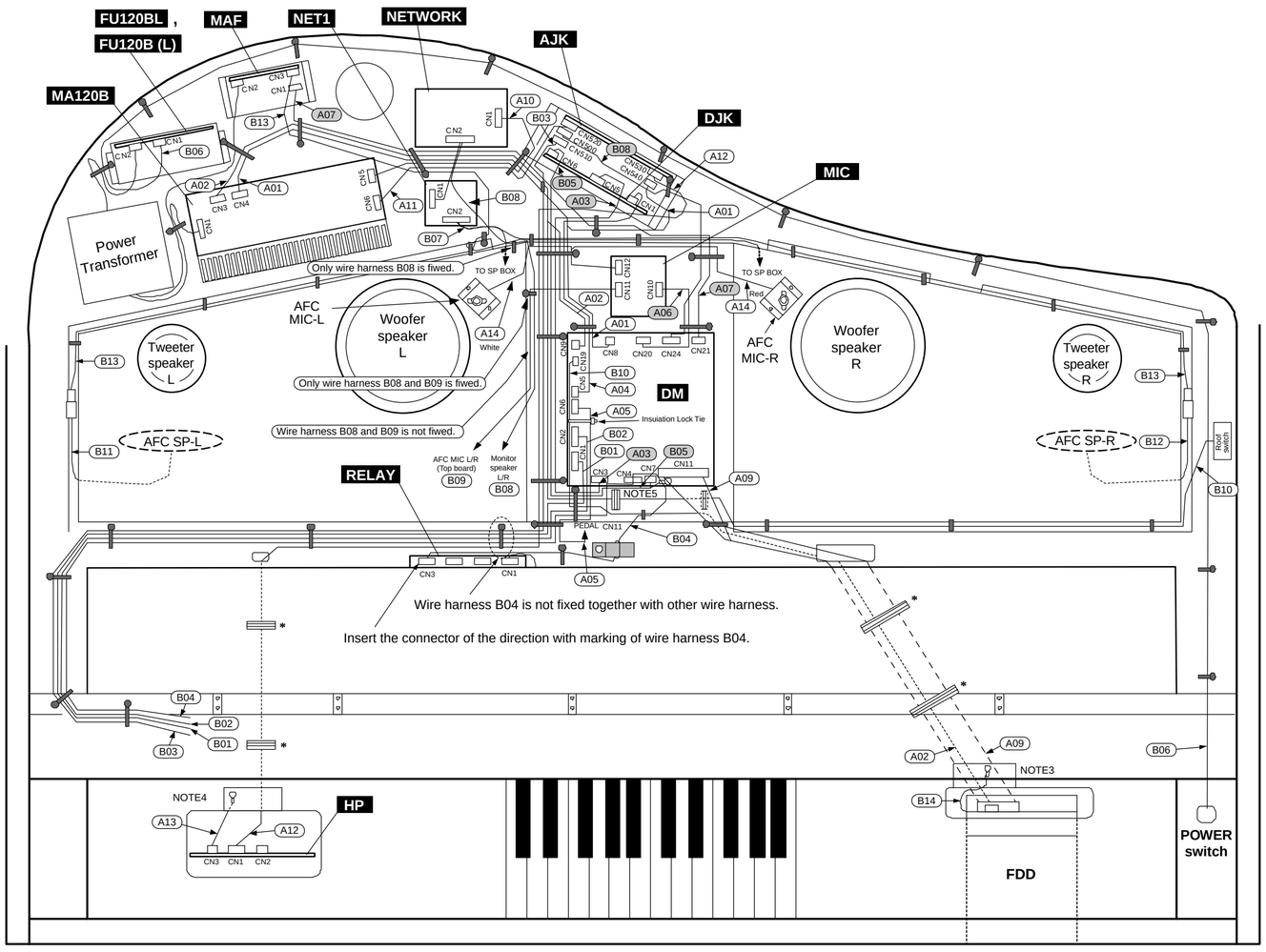

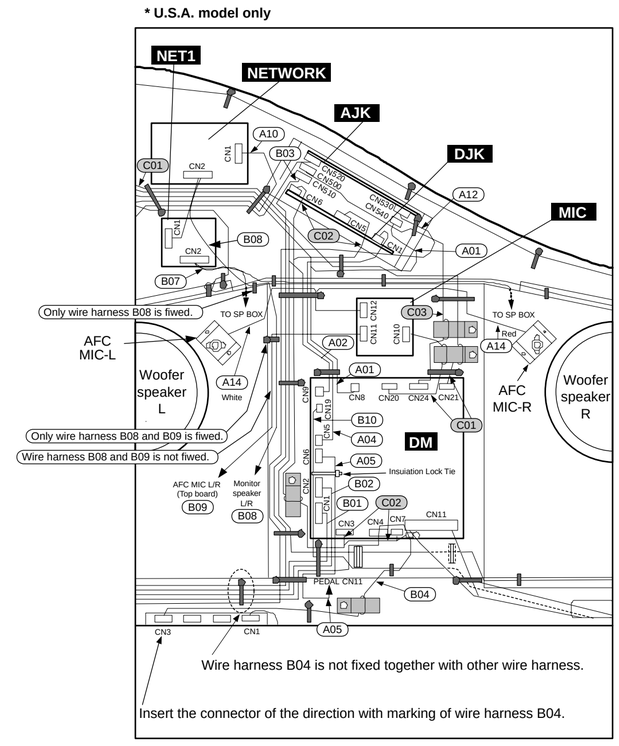

LOCATION	PART NO	PART NAME	DESTINATION	MARKET
A01	(WA68210)	3B POWER SUPPLY WIRE HARNESS	DM-CN8 ~ MA120B-CN4 ~ AJK-CN540	
A02	(WA68220)	5F POWER SUPPLY WIRE HARNESS	DM-CN9 ~ MA120B-CN3 ~ FDD	
A03	(WA69600)	DJK WIRE HARNESS	DM-CN3 ~ DJK-CN5	E (GBR)
A04	(VK11200)	KRD-KRD WIRE HARNESS	DM-CN5 ~ DJK-CN1	
A05	VK110900	KRD-KRD WIRE HARNESS	DM-CN6 ~ PEDAL (DJK)-CN11	
A06	VK102600	KRD-KRD WIRE HARNESS	DM-CN20 ~ MIC-CN10	E (GBR)
A07	(VK12250)	KRD-KRD WIRE HARNESS	DM-CN21 ~ MAF-CN1	E (GBR)
A08	(VK11260)	KRD-KRD WIRE HARNESS	DM-CN24 ~ AJK-CN500	E (GBR)
A09	WA688100	FDD WIRE HARNESS	DM-CN11 ~ FDD	
A10	(V875910)	NW WIRE HARNESS	MA120B-CN5 ~ NETWORK-CN1	
A11	VK108200	KRD-KRD WIRE HARNESS	MA120B-CN6 ~ AJK-CN520	
A12	(WB54340)	HP WIRE HARNESS	AJK-CN530 ~ HP-CN1	
A13	(V947370)	HP-GND WIRE	HP-CN3 ~ Keybed	
A14	(WB78370)	MIC4 WIRE HARNESS	MIC-JK12 ~ AFC MIC L/R (SP Box)	
B01	(VK13920)	KRD-KRD WIRE HARNESS	DM-CN1 ~ PNR-CN91	
B02	(VK14060)	KRD-KRD WIRE HARNESS	DM-CN2 ~ PNR-CN92	
B03	(WA69550)	MV WIRE HARNESS	AJK-CN510 ~ MV1-CN23	
B04	(WA68510)	EBUS-LF WIRE HARNESS	PNL-CN101 ~ DM-CN4 ~ RELAY-CN3	
B05	(V964520)	USB CABLE	DM-CN7 ~ DJK-CN6	E (GBR)
B06	(WA69520)	PSW WIRE HARNESS	FU120BL (FU120B (L))-CN1 ~ POWER switch	
B07	(WA69530)	SP WIRE HARNESS	NET1-CN2 ~ SP (TW-L/R, W-L/R)	
B08	(WA69540)	MSP WIRE HARNESS	NETWORK-CN2 ~ NET1-CN1, Monitor SP-L/R	
B09	(WA69590)	MIC3 WIRE HARNESS	MIC-CN11 ~ AFC MIC L/R (Top board)	
B10	(WB07480)	ROOF SW WIRE HARNESS	DM-CN19 ~ Roof switch	
B11	(WA83870)	AFC SPL WIRE HARNESS	AFC SP-L ~ AFC WIRE HARNESS	
B12	(WA83880)	AFC SPR WIRE HARNESS	AFC SP-R ~ AFC WIRE HARNESS	
B13	(WA69510)	AFC WIRE HARNESS	MAF-CN3 ~ AFC SP-L/R WIRE HARNESS	
B14	(V686040)	GND WIRE	FDD ~ Keybed	
C01	(WB06180)	MAF-LF WIRE HARNESS	DM-CN20 ~ MIC-CN10, DM-CN21 ~ MAF-CN1	U
C02	(WB06190)	DJK-LF WIRE HARNESS	DM-CN3 ~ DJK-CN5, DM-CN7 ~ DJK-CN6	U
C03	(WB78340)	AJK-LF WIRE HARNESS	DM-CN24 ~ AJK-CN500	U

* The parts with "( )" in "Part No." are not available as service parts.

A block is common to the market.

NOTE1) The meaning of symbols.

- : Data line filter
- : Cord binder
- : Cord holder
- : Lug tarminal
- : Filament tape
  - * mark: 70mm
  - no mark: 25mm

NOTE2) Install the lug terminal of USB cable (V9645200) as follows.

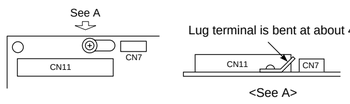

NOTE3) (A09) FDD Wire Harness shall be installed with its connector guide looks down.

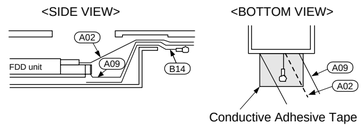

NOTE4)

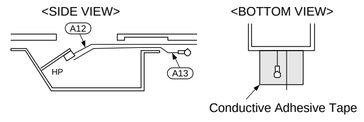

NOTE5) Wire harness B10 is fixed in two places so that it may not slackenon a filament tape.
(Wire harness B10 is stack on a shield sheet.)
It lets the wire harness A09 and B04 bottom pass.

2NC-WA48180 (3)

CLP-175

■ CLP-175 OVERALL CIRCUIT DIAGRAM 1/4 (DM)

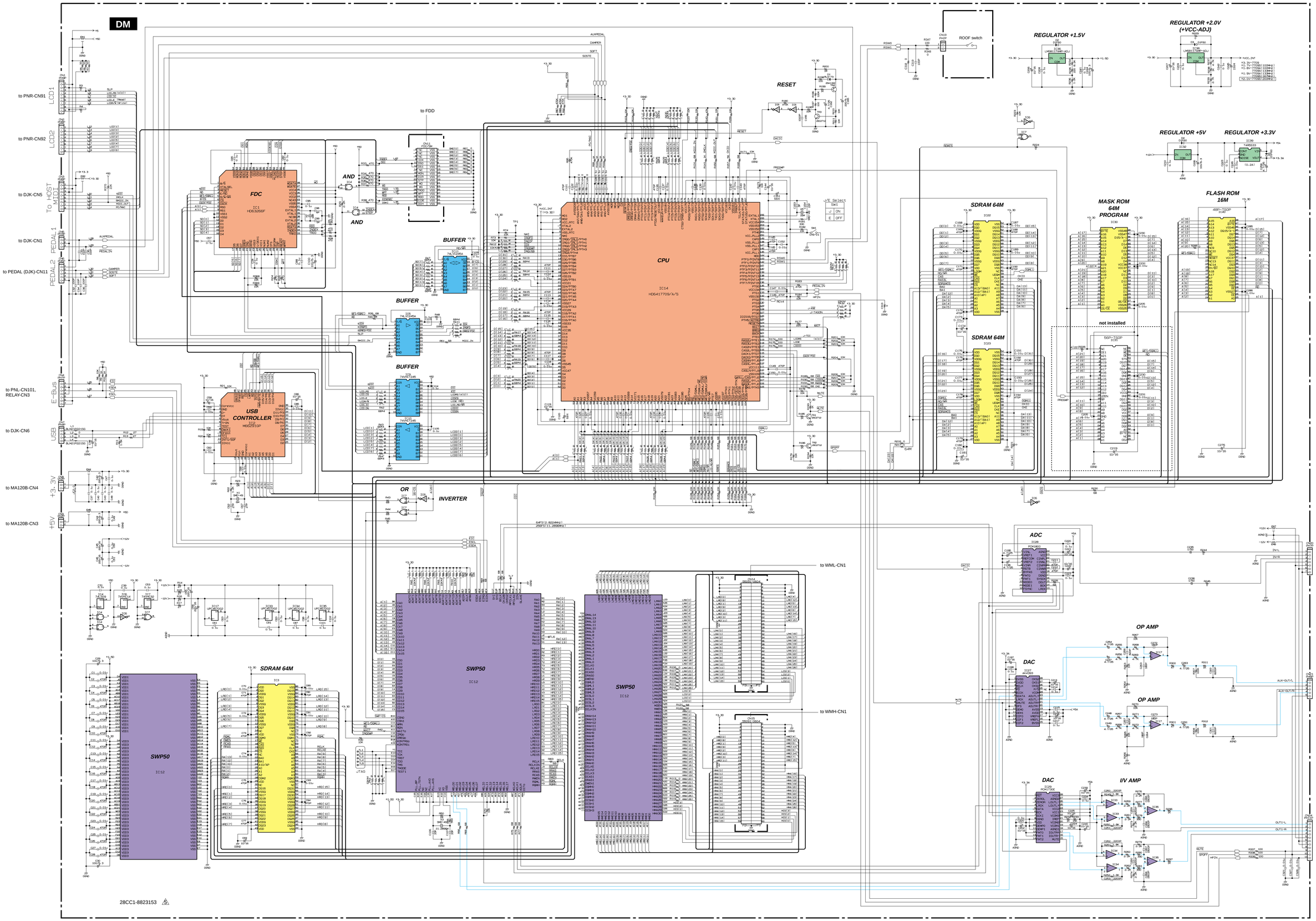

Note : See parts list for details of circuit board component parts.

■ CLP-175 OVERALL CIRCUIT DIAGRAM 2/4 (HAMMER SW-H, HAMMER SW-L, DAMPER SW-H, DAMPER SW-L, WML, WMH, RELAY)

RELAY

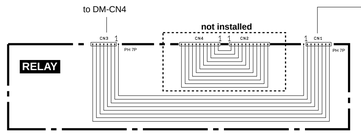

WML, WMH

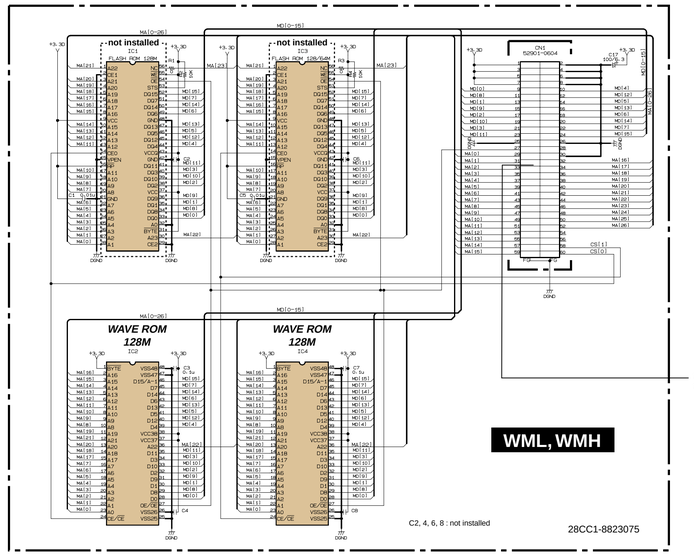

HAMMER SW-L (EBUS)

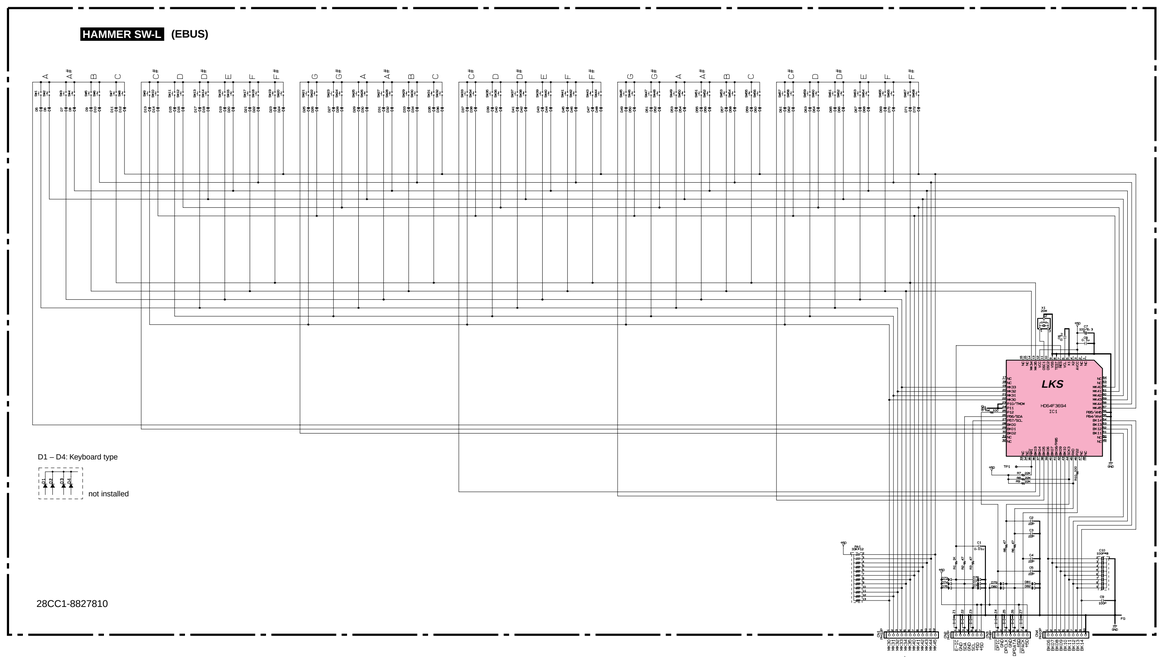

HAMMER SW-H

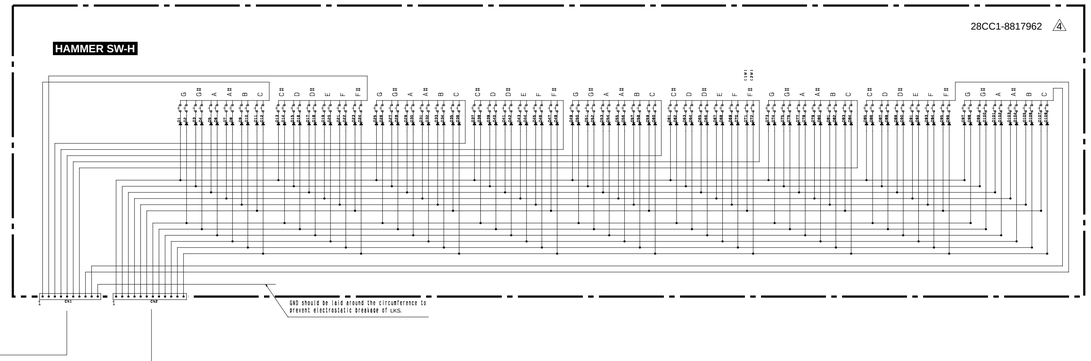

DAMPER SW-L (EBUS)

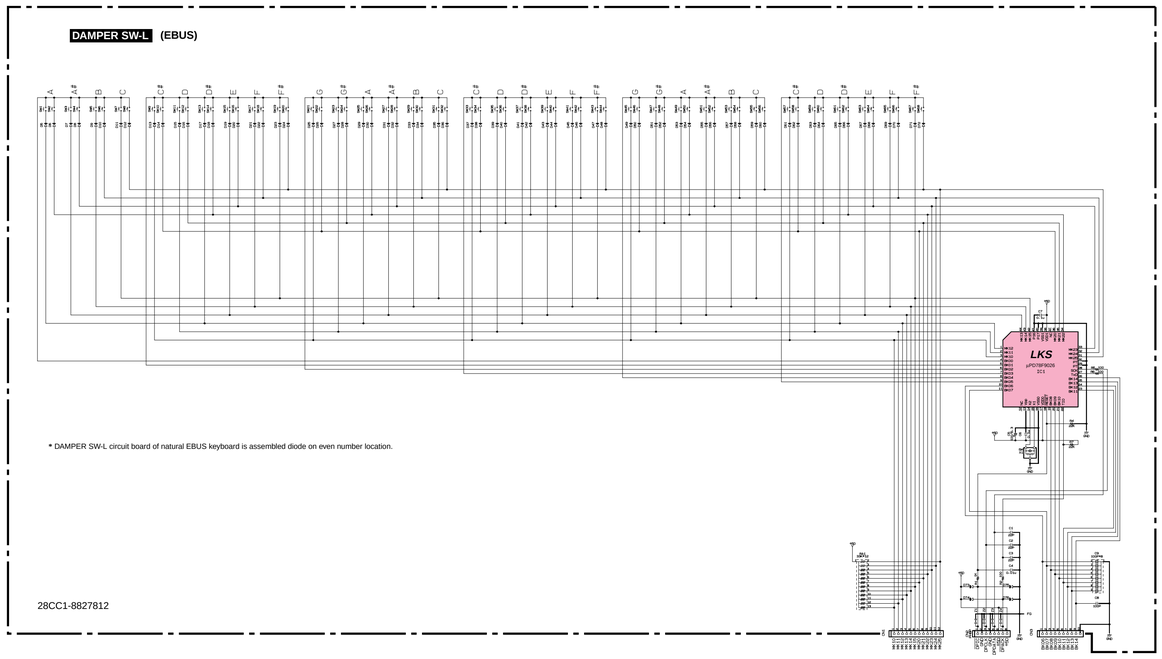

DAMPER SW-H (EBUS)

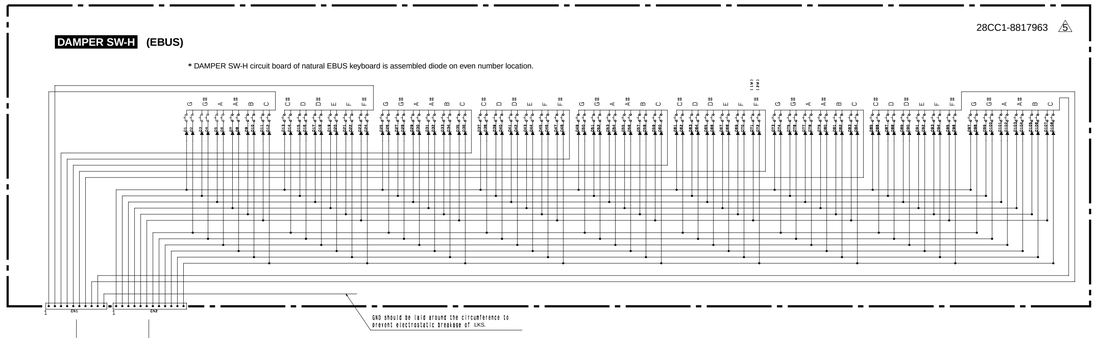

Note : See parts list for details of circuit board component parts.

CLP-175

■ CLP-175 OVERALL CIRCUIT DIAGRAM 3/4 (PNL, PNR, MV1, AJK, HP, DJK, PEDAL(DJK), PEDAL, MIC, MAF)

PNR

LCD

CONTRAST

28CC1-8823155 ⚠4

PNL

SYNCHRO START

	D0	D1	D2	D3	D4	D5	D6	D7	D8
S0	SW00	SW01	SW02	SW03	SW04	SW05	SW06	SW07	SW08
S1	SW10	SW11	SW12	SW13	SW14	SW15	SW16	SW17	SW18
S2	SW20	SW21	SW22	SW23	SW24	SW25	SW26	SW27	SW28
S3	SW30	SW31	SW32	SW33	SW34	SW35	SW36	SW37	SW38
S4	SW40	SW41	SW42	SW43	SW44	SW45	SW46	SW47	
S5	SW50	SW51	SW52	SW53	SW54	SW55	SW56	SW57	

	D0	D1	D2	D3
L5	LD00	LD01	LD02	LD03
L6	LD10	LD11	LD12	LD13
L7	LD20	LD21	LD22	LD23
L8	LD30	LD31	LD32	LD33
L9	LD40	LD41	LD42	LD43
L10	LD50		LD52	LD53
L11		LD61-R	LD62-R	LD63-R
L12		LD71-G	LD72-G	LD73-G

AJK

not inststled

not inststled

: not installed

28CC1-8822670 ⚠4

DJK

USB

PHOTO COUPLER

HOST SELECT

not installed

not installed

not installed

■ CLP-175 OVERALL CIRCUIT DIAGRAM 4/4 (FU120BL, FU120B (L), MA120B, NETWORK, NET1)

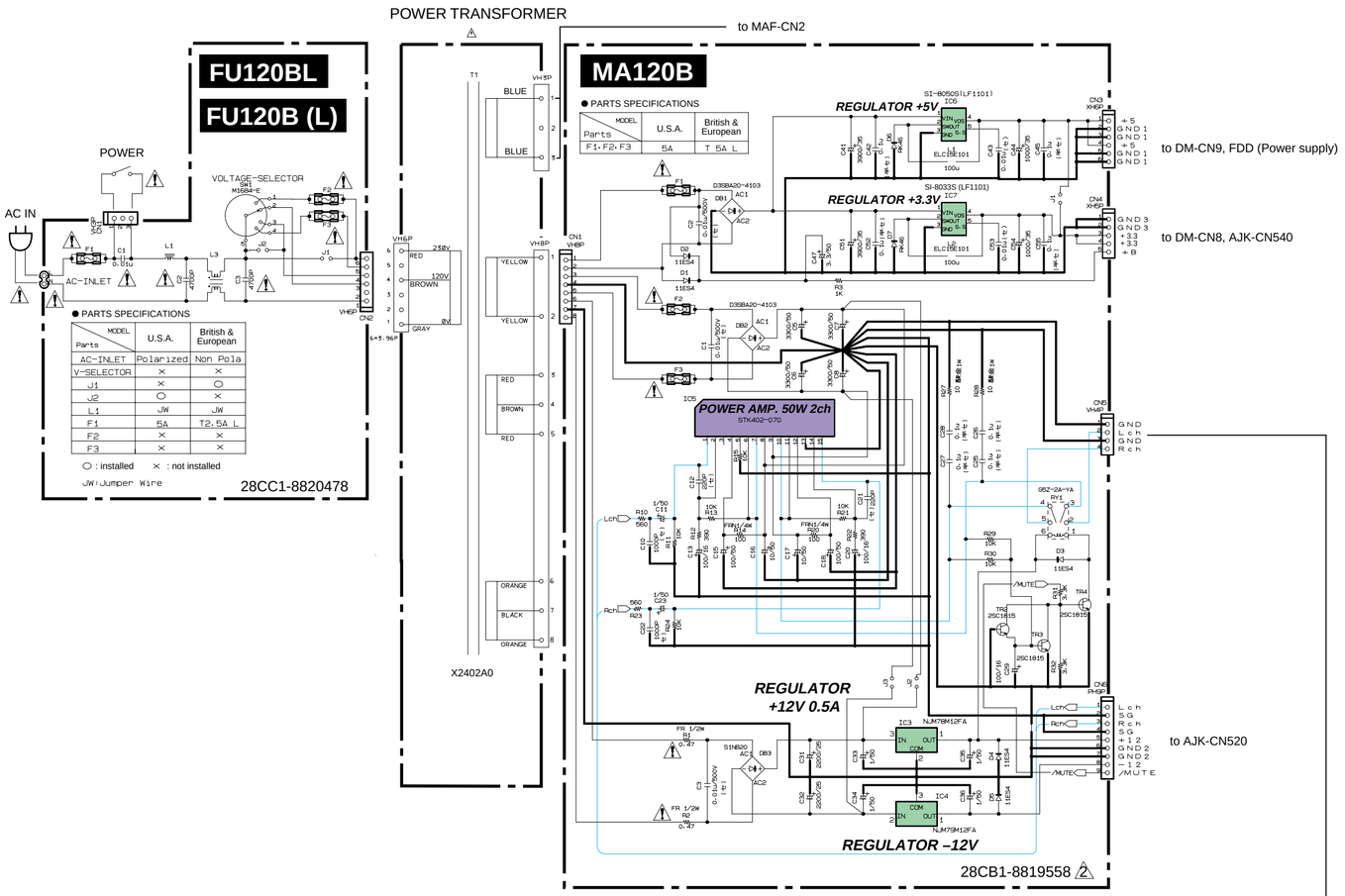

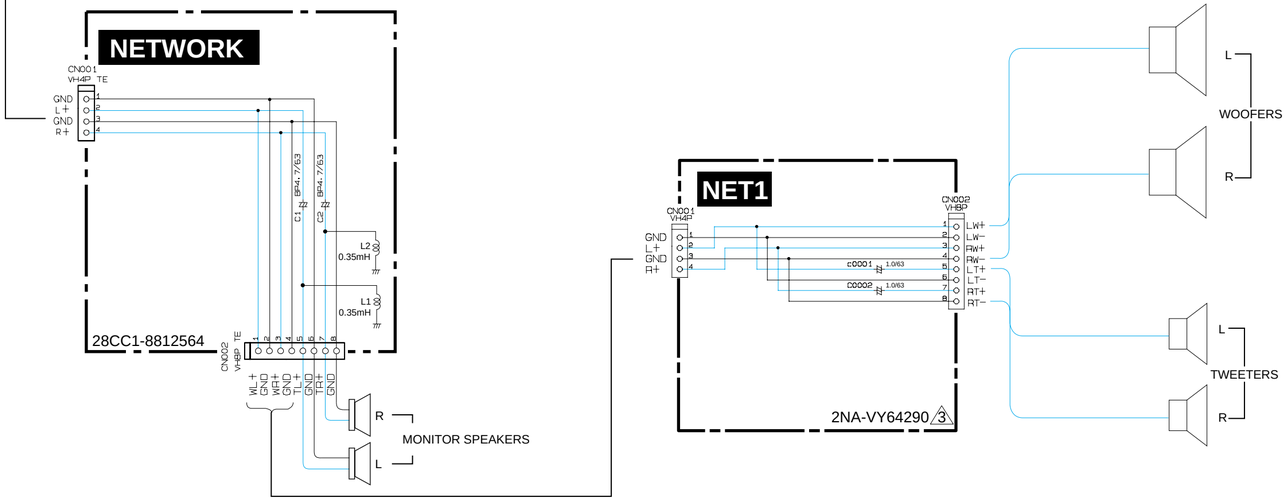

■ **WARNING**
Components having special characteristics are marked ⚠ and must be replaced with parts having specifications equel to those originally installed.

Note : See parts list for details of circuit board component parts.

（セ）: **Ceramic Capacitor**
（半セ）: **Semiconductive Capacitor**
（酸金）: **Metal Oxide Film Resistor**

• D3SBA20 (VN011300) DIODE STACK 4.0A 200V 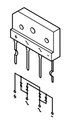	• D3SBA20-4103 (VQ111500) DIODE STACK 4.0A 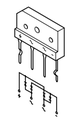	• S1NB20 1.0A 200V (VR253700) DIODE STACK 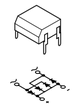	• LMS8117AMP-ADJ (X0609A00) REGULATOR 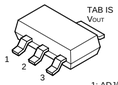 1: ADJ/GND 2: OUTPUT 3: INPUT	• TAR5S33 (XZ642A00) REGULATOR +3.3V 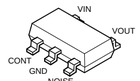	• µPC2905T-E1(XV492A00) • NJM7805DL1A(XW674A00) REGULATOR +5V  1: INPUT 2: COMMON 3: OUTPUT
---	---	---	---	---	---
• NJM79M12FA(XD343A00) REGULATOR -12V  1: OUTPUT 2: INPUT 3: COMMON	• NJM78L05UA(XJ598A00) REGULATOR +5V  1: OUTPUT 2: COMMON 3: INPUT	• NJM78M12FA(XJ602A00) REGULATOR +12V  1: OUTPUT 2: COMMON 3: INPUT	• SI-8050S(XT442A00) REGULATOR +5V 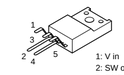 1: V in 2: SW out 3: GND 4: V os 5: S.S	• SI-8033S(LF1101) (XZ274A00) REGULATOR +3.3V 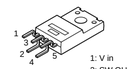 1: V in 2: SW OUT 3: GND 4: V os 5: S.S	