Clavinova

CLP-130

SERVICE MANUAL



CLP-130

CONTENTS

SPECIFICATIONS 3
PANEL LAYOUT 4
CIRCUIT BOARD LAYOUT 6
BLOCK DIAGRAM 7
DISASSEMBLY PROCEDURE 8
LSI PIN DESCRIPTION 19
IC BLOCK DIAGRAM 21
CIRCUIT BOARDS 23
INSPECTION 33
MIDI IMPLEMENTATION CHART 40
OVERALL CIRCUIT DIAGRAM
PARTS LIST

This document is printed on chlorine free (ECF) paper with soy ink.

CL 001672
20020401-220000

YAMAHA
HAMAMATSU, JAPAN
1,752K-878 Ⓜ ⓘ Printed in Japan '02, 03

IMPORTANT NOTICE

This manual has been provided for the use of authorized Yamaha Retailers and their service personnel. It has been assumed that basic service procedures inherent to the industry, and more specifically Yamaha Products, are already known and understood by the users, and have therefore not been restated.

WARNING: Failure to follow appropriate service and safety procedures when servicing this product may result in personal injury, destruction of expensive components and failure of the product to perform as specified. For these reasons, we advise all Yamaha product owners that all service required should be performed by an authorized Yamaha Retailer or the appointed service representative.

IMPORTANT: This presentation or sale of this manual to any individual or firm does not constitute authorization, certification, recognition of any applicable technical capabilities, or establish a principal-agent relationship of any form.

The data provided is believed to be accurate and applicable to the unit(s) indicated on the cover. The research engineering, and service departments of Yamaha are continually striving to improve Yamaha products. Modifications are, therefor, inevitable and changes in specification are subject to change without notice or obligation to retrofit. Should any discrepancy appear to exist, please contact the distributor's Service Division.

WARNING: Static discharges can destroy expensive components. Discharge any static electricity your body may have accumulated by grounding yourself to the ground bus in the unit (heavy gauge black wires connect to this bus).

IMPORTANT: Turn the unit OFF during disassembly and parts replacement. Recheck all work before you apply power to the unit.

WARNING: CHEMICAL CONTENT NOTICE!

The solder used in the production of this product contains LEAD. In addition, other electrical / electronic and / or plastic (where applicable) components may also contain traces of chemicals found by the California Health and Welfare Agency (and possibly other entities) to cause cancer and / or birth defects or other reproductive harm.

DO NOT PLACE SOLDER, ELECTRICAL / ELECTRONIC OR PLASTIC COMPONENTS IN YOUR MOUTH FOR ANY REASON WHAT SO EVER!

Avoid prolonged, unprotected contact between solder and your skin! When soldering, do not inhale solder fumes or expose eyes to solder / flux vapor!

If you come in contact with solder or components located inside the enclosure of this product, wash your hands before handling food.

IMPORTANT NOTICE FOR THE UNITED KINGDOM

Connecting the Plug and Cord

IMPORTANT. The wires in this mains lead are coloured in accordance with the following code:

BLUE : NEUTRAL
BROWN : LIVE

As the colours of the wires in the mains lead of this apparatus may not correspond with the coloured makings identifying the terminals in your plug proceed as follows:

The wire which is coloured BLUE must be connected to the terminal which is marked with the letter N or coloured BLACK.

The wire which is coloured BROWN must be connected to the terminal which is marked with the letter L or coloured RED.

Making sure that neither core is connected to the earth terminal of the three pin plug.

(2 wires)

• This applies only to products distributed by Yamaha-Kemble Music (U.K.) Ltd.

■ WARNING

Components having special characteristics are marked ⚠ and must be replaced with parts having specification equal to those originally installed.

■ SPECIFICATIONS

Keyboard	88 (A-1 ~ C7)
Sound Source	AWM Dynamic Stereo Sampling
Polyphony	64 Notes Max.
Voice Selections	14 x 2 variations for each voice
Effect	Reverb, Effect, Brilliance
Volume	Master Volume
Controls	Dual, Split, Metoronome, Transpose, Touch (Hard/Medium/Soft/Fixed), Functions, Speaker ON/OFF
Recording/Playback	2-track recording/playback (3 user songs), Tempo Adjustment, Synchro Start
Pedal	Damper, Sostenuto, Soft
Demo Songs	14 voice Demo Songs, 50 preset Songs
Jacks/Connectors	MIDI (IN/OUT/THRU), PHONES x 2, AUX IN(L/L+R,R), AUX OUT(L/L+R,R), AUX OUT (LEVEL FIXED)(L,R), TO HOST
Output Impedance	1.2KΩ
Main Amplifiers	40W x 2
Speakers	16cm x 2, 5cm x 2
Power Consumption	90W
Dimensions (WxDxH) (with music stand)	1370mm x 518mm x 850mm [53 15/16" x 20 3/8" x 33 7/16"] (1370mm x 518mm x 1020mm) [53 15/16" x 20 3/8" x 40 1/8"]
Weight	54 kg (119 lbs., 1oz)
Accessories	Owner's Manual, "50 greats for the Piano" (Music Book), Bench (included or optional depending on locale)

■ PANEL LAYOUT

• Top Panel

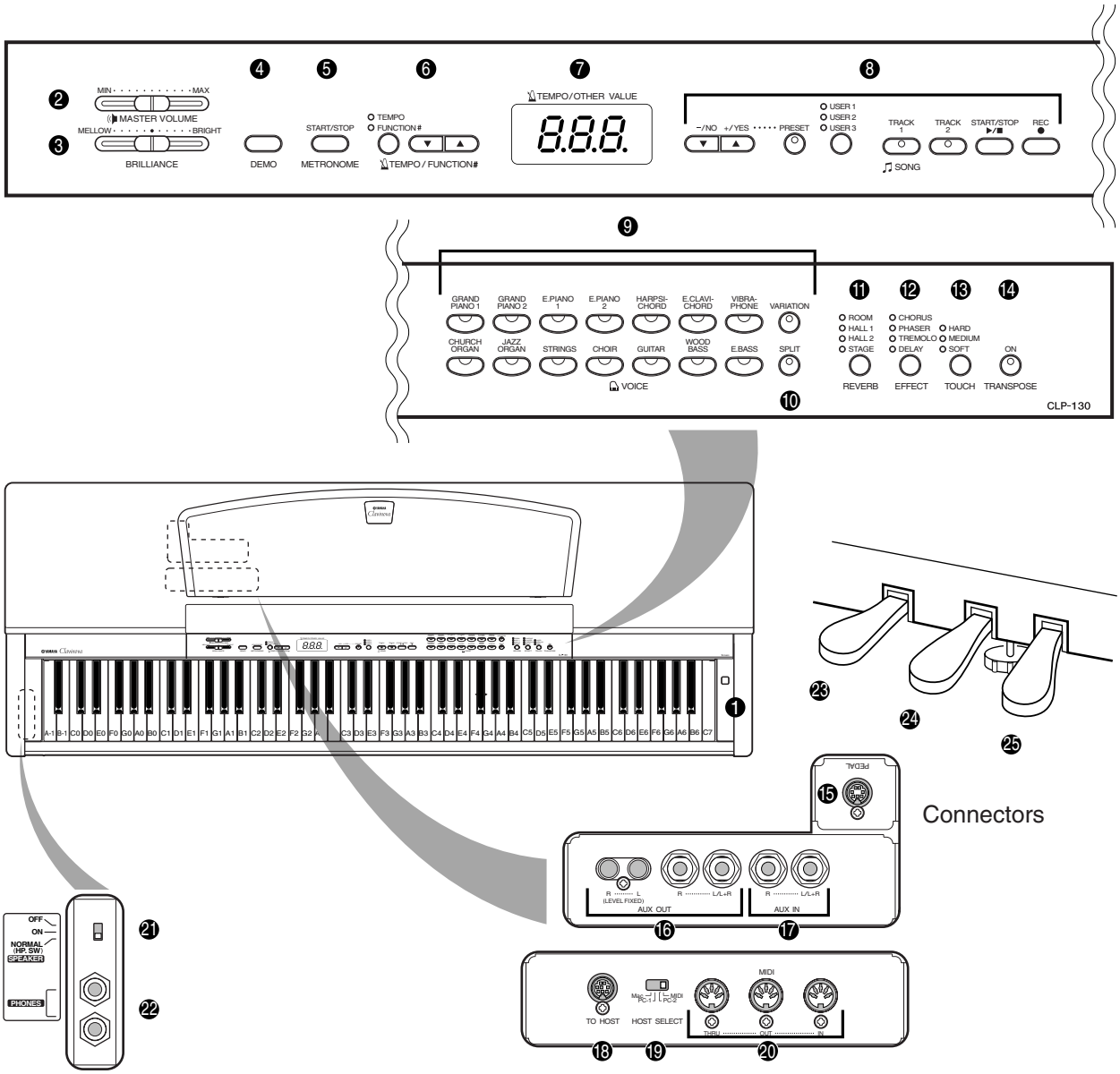

❶ POWER
❷ [MASTER VOLUME]
❸ [BRILLIANCE]
❹ [DEMO]
❺ METRONOME [START/STOP]
❻ [TEMPO/FUNCTION # ▲▼]
❼ LED Display
❽ [-/NO]/[+YES]
[PRESET]
[USER1/USER2/USER3]
[TRACK1][TRACK2]
SONG [START/STOP]
[REC]
❾ Voice buttons
❿ [SPLIT]
⓫ [REVERB]
⓬ [EFFECT]
⓭ [TOUCH]
⓮ [TRANSPOSE]
⓯ [PEDAL]
⓰ AUX OUT
⓱ AUX IN
⓲ [TO HOST]
⓳ [HOST SELECT]
⓴ MIDI [IN][OUT][THRU]
㉑ [SPEAKER]
㉒ [PHONE]
㉓ Soft (Left) Pedal
㉔ Sostenuto (Center) Pedal
㉕ Damper (Right) Pedal

■ CIRCUIT BOARD LAYOUT

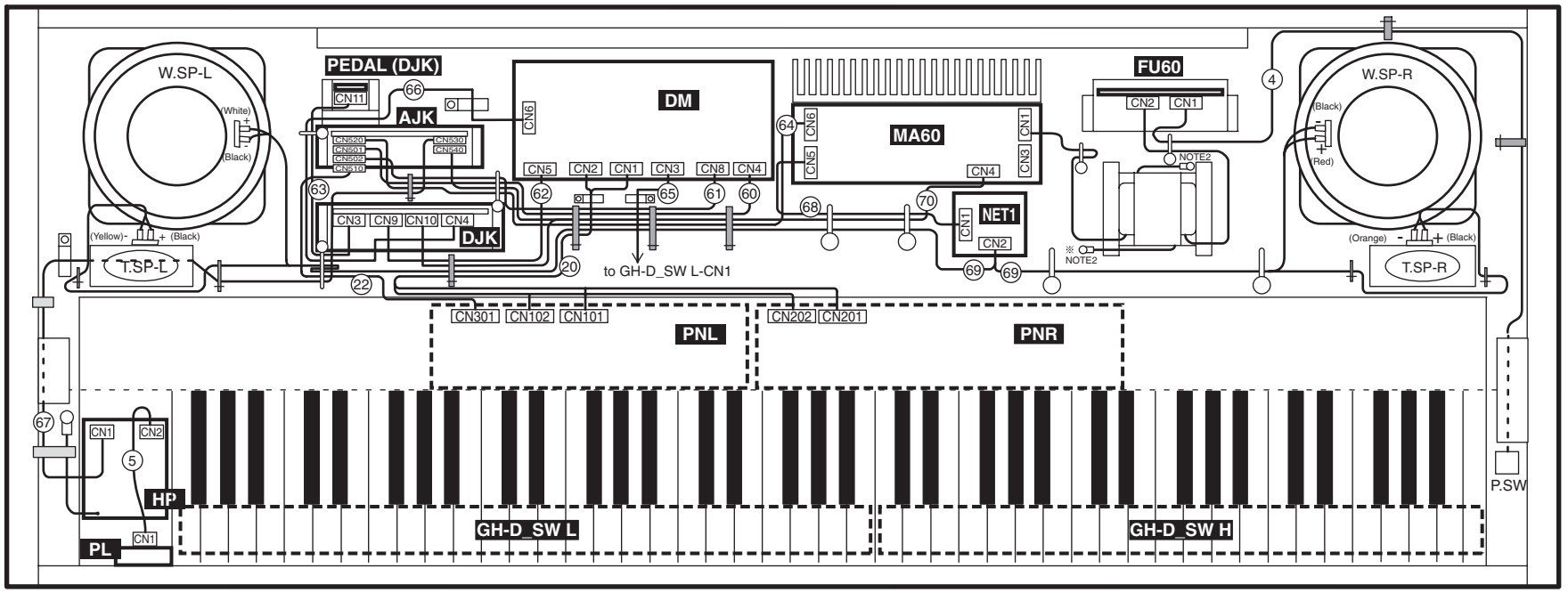

NOTE1: The meaning of symbols

: Ferrite Core

: Cable Holder

: Code Binder

: Filament Tape

: Lug Tarminal

: Cable Holder

※NOTE2: U/ C Model only

Location	Part Number	Part Name	Pin/Lenge	Destination		
60	VK110800	KRD-KRD Wire Harness	4Pin/ L=450 L=800	DM-CN4	AJK-CN501	
61	VK110700	KRD-KRD Wire Harness	3Pin/L=450	DM-CN8	AJK-CN502	
62	VK104000	KRD-KRD Wire Harness	7Pin/L=250	DM-CN5	DJK-CN9	
63	VK103800	KRD-KRD Wire Harness	5Pin/L=250	DJK-CN3	PEDAL(DJK)-CN11	
64	VK113900	KRD-KRD Wire Harness	9Pin/L=550	MA60-CN6	AJK-CN520	
65	V8527600	MK-LF Wire Harness	8Pin/L=500	DM-CN3	GH-D_SW L-CN1	
66	V8527700	DJK-LF Wire Harness	11Pin/L=550	DM-CN6	DJK-CN4	
67	V8527800	HP-LF Wire Harness	7Pin/L=750	AJK-CN530	HP-CN1	
68	V8528300	PU-NW Wire Harness	4Pin/L=600	MA60-CN5	NET1-CN1	
69	V9221900	SP Wire Harness	8Pin/L=300	NET1-CN2	W.SP-L/R T.SP-L/R	
70	V8529100	VDD Wire Harness	7P→ 6P/L=600 2P/L=550	MA60-CN4	AJK-CN540	DJK-CN10
20	V8528100	PN-LF Wire Harness	13P,9P/L=700	DM-CN1 DM-CN2	PNL-CN101 PNL-CN102	PNR-CN201 PNR-CN202
22	V2226200	VOL Wire Harness	8Pin/L=400	PNL-CN301	AJK-CN510	
4	V8528200	PSW Wire Harness	3Pin	P.SW	FU60-CN1	
5	VK099600	KRD-KRD Wire Harness	2Pin/L=150	HP-CN2	PL-CN1	

2NA-V824980 2

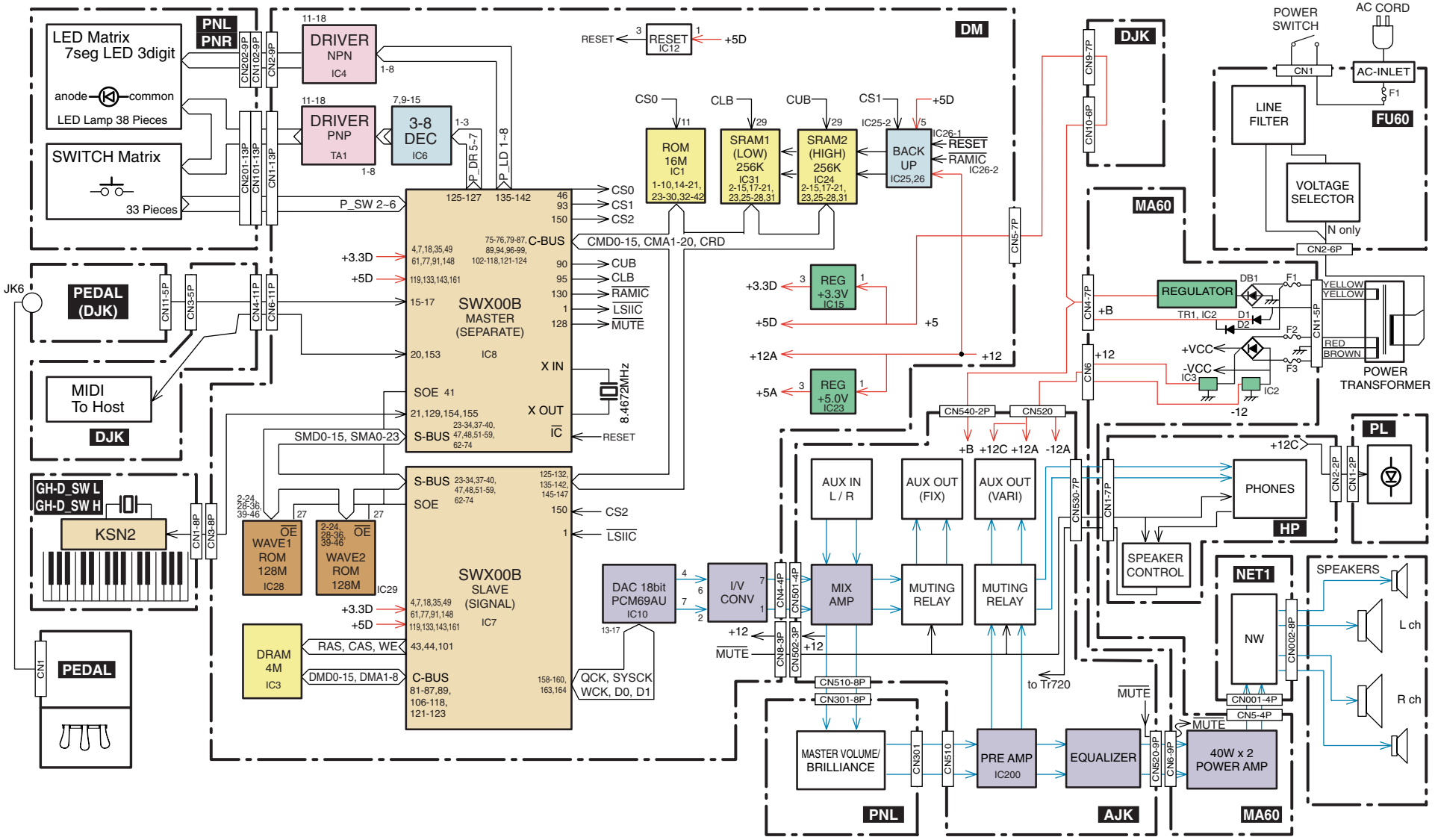

28CC1-8822675

■ DISASSEMBLY PROCEDURE

1. Top Board Assembly
(Time required: about 2 min)

* Before disassembling the top board assembly, shut up the key cover assembly completely to protect the key cover assembly from being scratched.

1-1. Remove the three (3) screws marked [5]. (Fig.1)

1-2. Slide the top board assembly forward and lift it out.

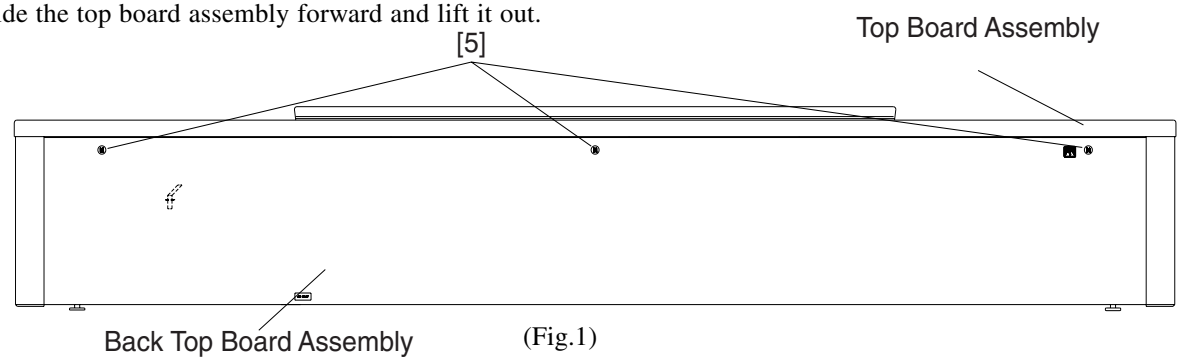

(Fig.1)

[5]: Truss Head Screw 4.0X16 MFZN2BL (V6207400)

2. Circuit Boards or Units in the Main Unit
(Time required: between 3 and 5 min for each)

2-1. Remove the top board assembly. (See Procedure 1)

2-2. Remove the following screws to remove each unit. (Fig.2)

* When remove the speaker (Woofer), remove the speaker (Tweeter) priviously.

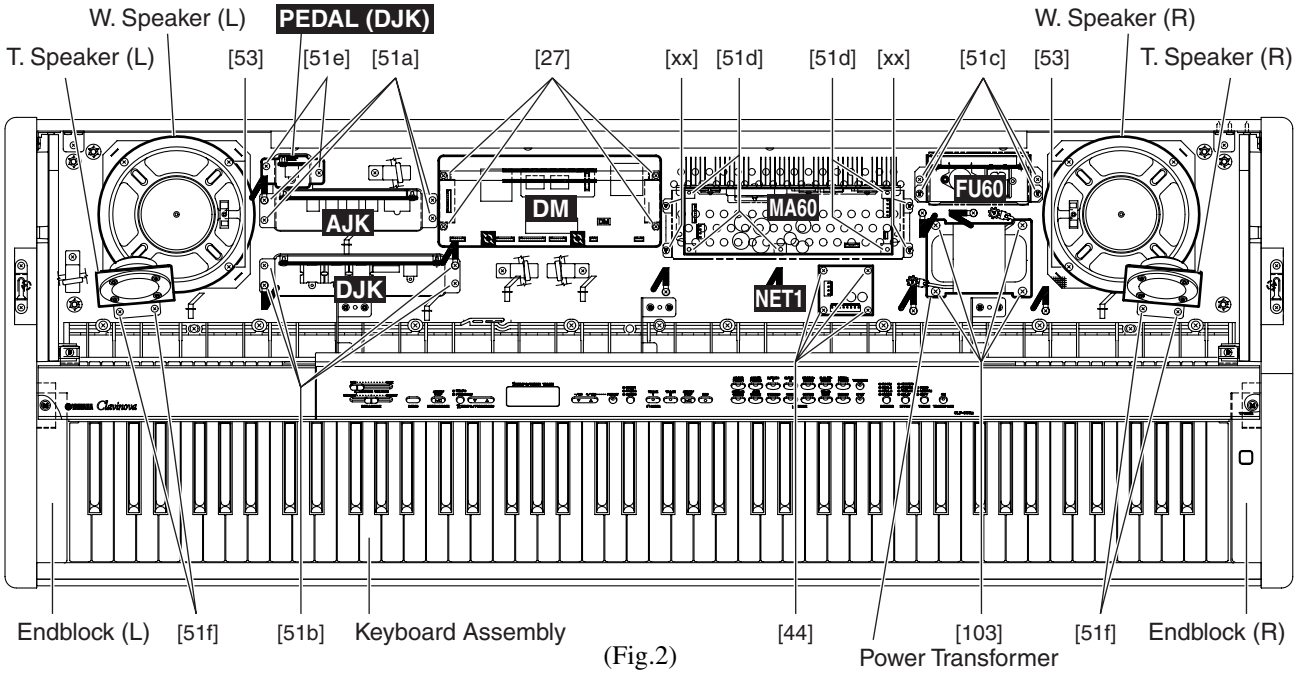

(Fig.2)

[27]: Bind Head Tapping Screw-B 3.0X8 MFZN2Y (EP600250)
[44]: Bind Head Tapping Screw-1 3.5X20 MFZN2Y (EP030470)
[51a]: Bind Head Tapping Screw-1 3.5X12 MFZN2Y (EP030240)
[51b]: Bind Head Tapping Screw-1 3.5X12 MFZN2Y (EP030240)
[51c]: Bind Head Tapping Screw-1 3.5X12 MFZN2Y (EP030240)
[51d]: Bind Head Tapping Screw-1 3.5X12 MFZN2Y (EP030240)
[51e]: Bind Head Tapping Screw-1 3.5X12 MFZN2Y (EP030240)
[51f]: Bind Head Tapping Screw-1 3.5X12 MFZN2Y (EP030240)
[53]: Truss Head Tapping Screw-1 4X20 MFZN2Y (20338800)
[103]: Bind Head Screw 4.0X14 MFZN2Y (J,E,N) (EG340210)
[103]: Truss Head Screw 4.0X20 MFZN2Y (U) (VL445800)

3. Key Cover Assembly (Time required: about 3 min)

3-1. Remove the top board assembly. (See Procedure 1)
3-2. Remove the screws marked [27] for each side to remove the rack cover L, R. (Fig.3-1)
3-3. Set both ends of the rod to slits of the rack, and lift the key cover assembly (Fig.3-2)
3-4. Lean the key cover assembly slightly, and remove the guide pins from the guide rail. (Fig.3-2)
On these occations, take care not to scratch the side cover. When reinstall the key cover assembly, apply masking tape along the guide rail to protect the side covers from being scratched.

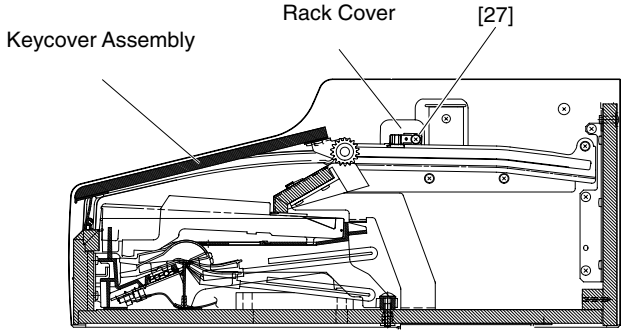

(Fig.3-1)

[27]: Bind Head Tapping Screw-B 3.0X8 MFZN2Y (EP600250)

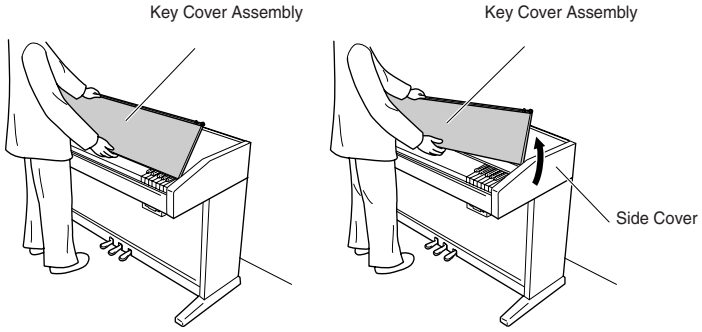

(Fig.3-2)

4. Panel Assembly (Time required: about 5 min)

4-1. Remove the top board assembly. (See Procedure 1)
4-2. Remove the key cover assembly. (See Procedure 3)
4-3. Remove the two (2) screws marked [20] and the six (6) screws marked [51]. The panel assembly can then be removed. (Fig.4)

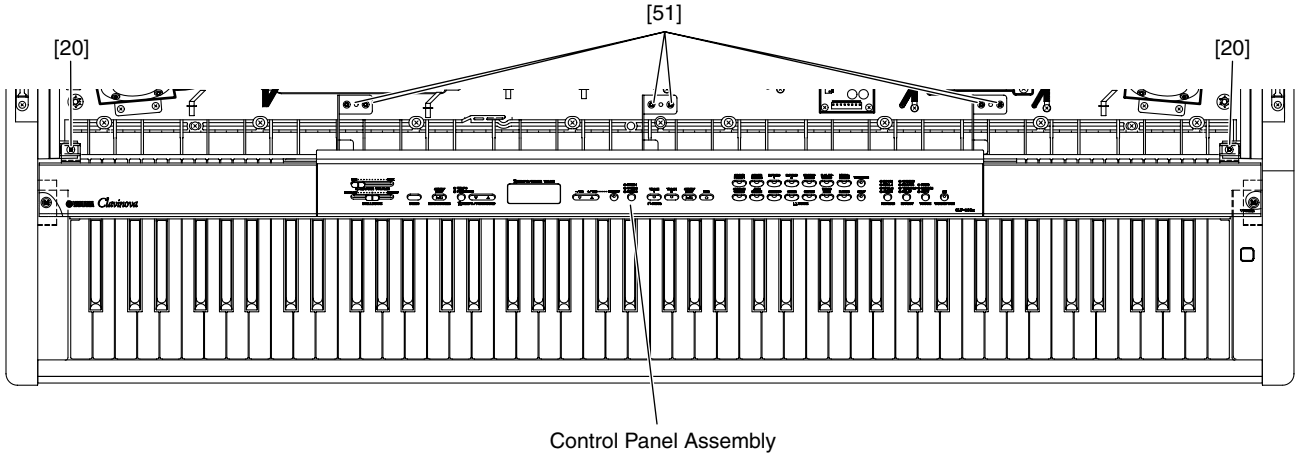

(Fig.4)

[20]: Bind Head Tapping Screw-B 4.0X10 MFZN2Y (EP640130)
[51]: Bind Head Tapping Screw-1 3.5X12 MFZN2Y (EP030240)

5. PNL, PNR Circuit Board (Time required: about 7 min for each)

5-1. Remove the top board assembly. (See Procedure 1)
5-2. Remove the key cover assembly. (See Procedure 3)
5-3. Remove the panel assembly. (See Procedure 4)
5-4. Remove the eight (8) screws marked [24a] and the two (2) screws marked [27]. The PNL circuit board can then be removed. (Fig.5)
5-5. Remove the ten (10) screws marked [24b]. The PNR circuit board can then be removed. (Fig.5)

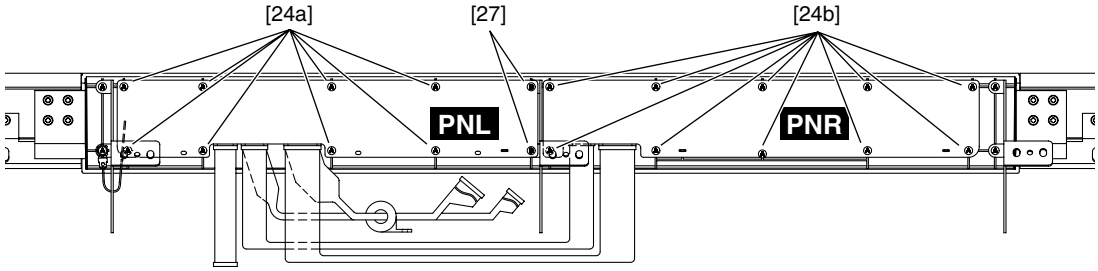

(Fig.5)

[24a]: Bind Head Tapping Screw-B 3.0X8 MFZN2Y (EP600250)
[24b]: Bind Head Tapping Screw-B 3.0X8 MFZN2Y (EP600250)
[27]: Bind Head Tapping Screw-B 3.0X10 MFZN2BL (EP600140)

6. Rack Assembly L, R (Time required: about 4 min for each)

6-1. Remove the top board assembly. (See Procedure 1)
6-2. Remove the key cover assembly. (See Procedure 3)
6-3. Remove the four (4) screws marked [8] for each side. The rack assembly L, R can then be removed. (Fig.6)

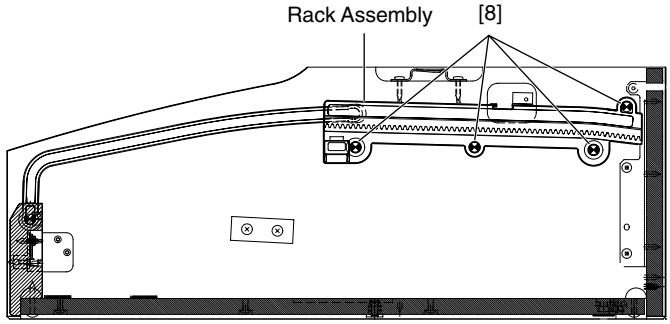

(Fig.6)

[8]: Bind Head Tapping Screw-1 3.5X16 MFZN2Y (EP030190)

7. End Block Assembly L, R (Time required: about 6 min for each)

7-1. Remove the top board assembly. (See Procedure 1)
7-2. Remove the key cover assembly. (See Procedure 3)
7-3. Remove the panel assembly. (See Procedure 4)
7-4. Remove the screws marked [23] for each side. The end block assembly L, R can then be removed. (Fig.7)

8. HP Jack Assembly (Time required: about 7 min)

8-1. Remove the top board assembly. (See Procedure 1)
8-2. Remove the key cover assembly. (See Procedure 3)
8-3. Remove the panel assembly. (See Procedure 4)
8-4. Remove the end block assembly L. (See Procedure 7)
8-5. Remove the three (3) screws marked [51]. The HP jack assembly can then be removed. (Fig.7)

9. Power Switch Assembly (Time required: about 7 min)

9-1. Remove the top board assembly. (See Procedure 1)
9-2. Remove the key cover assembly. (See Procedure 3)
9-3. Remove the panel assembly. (See Procedure 4)
9-4. Remove the end block assembly R. (See Procedure 7)
9-5. Remove the two (2) screws marked [6]. The power switch assembly can then be removed. (Fig.7)

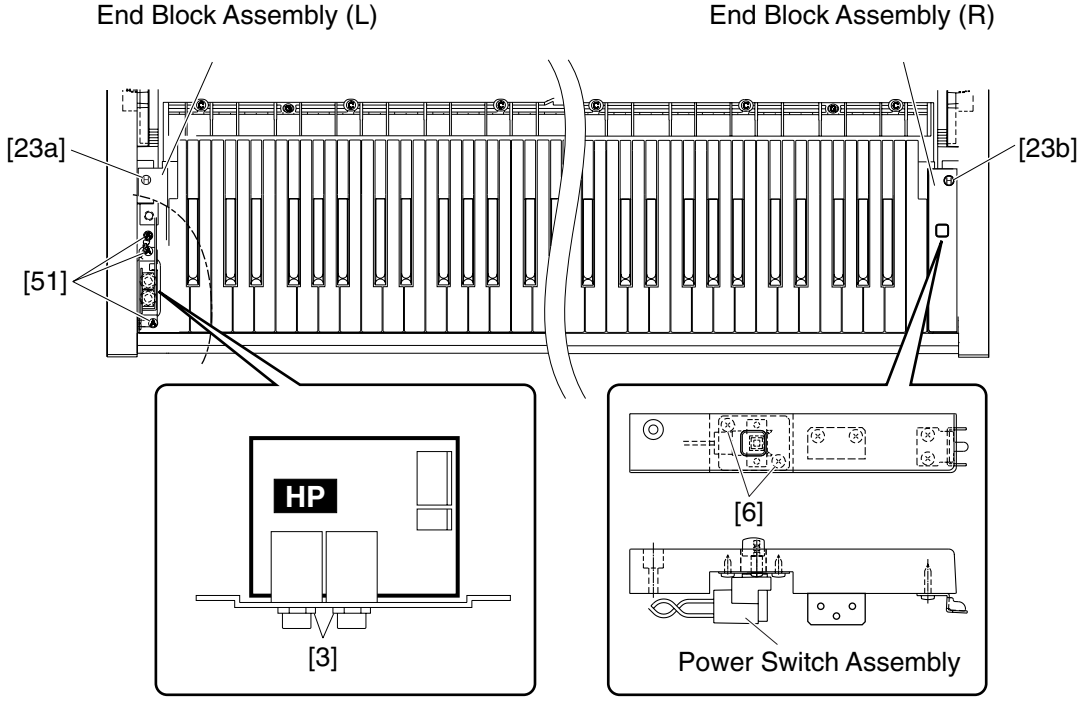

(Fig.7)

[3]: Hexagonal Nut 12.0 14X2 MFZN2BL (VB508600)
[6]: Bind Head Tapping Screw-1 3.5X10 MFZN2BL (EP030320)
[23a]: Truss Head Tapping Screw-1 3.5X30 MFZN2Y (VA076400)
[23b]: Truss Head Tapping Screw-1 3.5X30 MFZN2Y (VA076400)
[51]: Bind Head Tapping Screw-1 3.5X12 MFZN2Y (EP030240)

10. Keyboard Assembly (Time required: about 12 min)

10-1. Remove the top board assembly. (See Procedure 1)
10-2. Remove the speaker (Tweeter). (See Procedure 2)
10-3. Remove the key cover assembly. (See Procedure 3)
10-4. Remove the panel assembly. (See Procedure 4)
10-5. Remove either the rack assembly L or R. (See Procedure 6)
10-6. Remove the end block assembly L, R. (See Procedure 7)
10-7. Remove the nine (9) screws marked [2] and the two (2) screws marked [3]. (Fig.8)
10-8. Move the keyboard assembly backward, hold the central area of it, and get it upright to remove. (Fig.9)

* Holding both side ends of the keyboard assembly may twist and damage the frame.

* When reinstall the keyboard assembly, tighten the screws marked [3] and the screws marked [2] in this order.

11. PL Circuit Board (Time required: about 13 min)

11-1. Remove the top board assembly. (See Procedure 1)
11-2. Remove the speaker (Tweeter). (See Procedure 2)
11-3. Remove the key cover assembly. (See Procedure 3)
11-4. Remove the panel assembly. (See Procedure 4)
11-5. Remove either the rack assembly L or R. (See Procedure 6)
11-6. Remove the end block assembly L, R. (See Procedure 7)
11-7. Remove the keyboard assembly. (See Procedure 10)
11-8. Remove the screw marked [10e]. The PL circuit board can then be removed. (Fig.8)

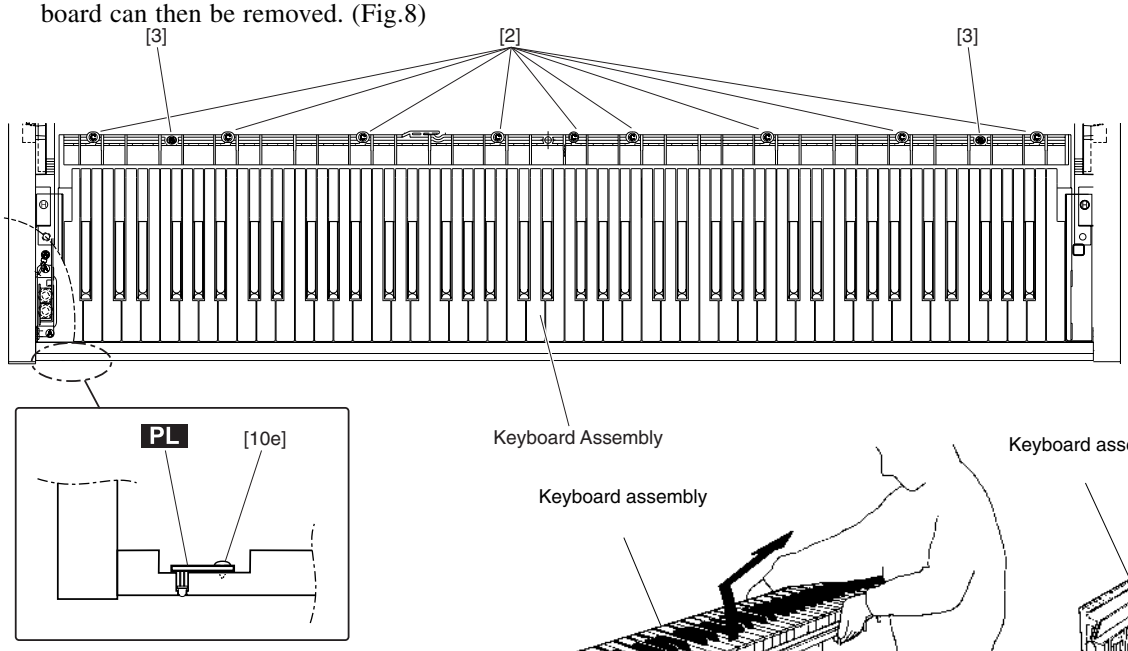

(Fig.8)

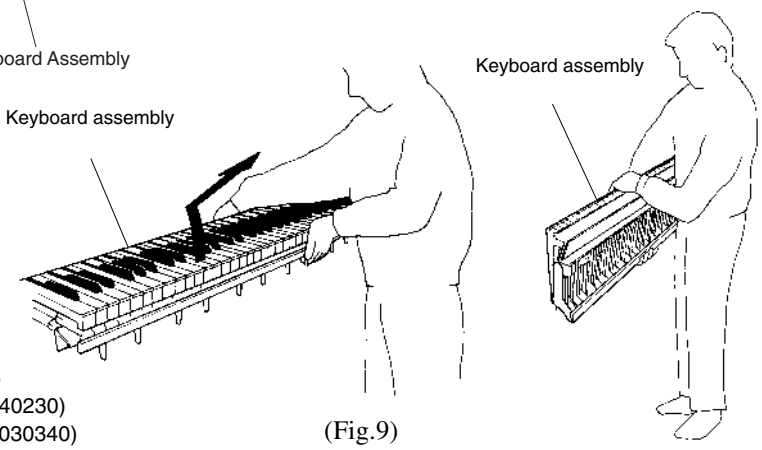

(Fig.9)

[2]: Pan Head Screw 5.0X25 MFZN2Y PW (VV040700)
[3]: Bind Head Tapping Screw-1 4.0X14 MFZN2Y (EP040230)
[10e]: Bind Head Tapping Screw-1 3.5X12 MFZN2BL (EP030340)

12. Music Rest Assembly (Time required: about 1 min)

12-1. Remove the four (4) screws marked [7]. The music rest assembly can then be removed. (Fig.10)

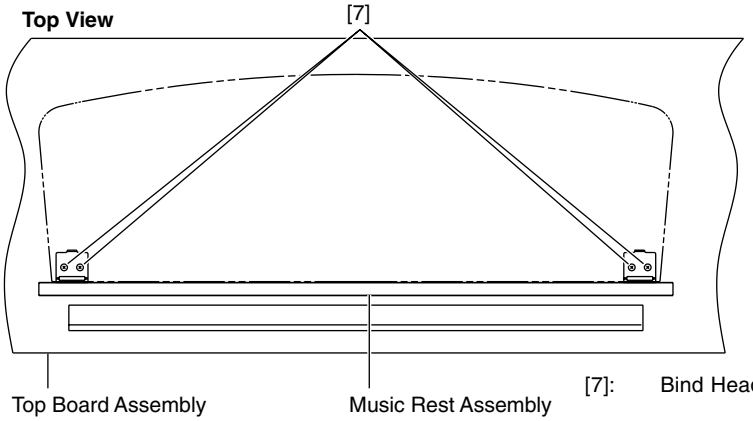

(Fig.10)

[7]: Bind Head Tapping Screw-1 3.0X16 MFZN2BL (EP030310)

13. Back Board (Time required: about 2 min)

13-1. Remove the four (4) screws marked [S1] and the two (2) screws marked [S3]. The back board can then be removed. (Fig.11)

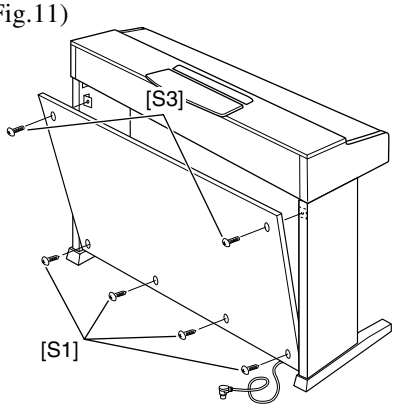

(Fig.11)

[S1]: Truss Head Tapping Screw-1 4.0X20 MFZNBL (03747290)
[S3]: Truss Head Screw 4.0X12 MFZNBL (VP367300)

14. Stand Base L, R (Time required: about 3 min for each)

* For safety, make sure to perform by two persons.

14-1. Spread soft cloth on the floor, and lay down the product carefully on its back. (Fig.12)

14-2. Put bolsters under both side boards to float the stand bases from the floor. (Fig.13)

14-3. Remove the three (3) screws marked [7] for each side. The stand base L, R can then be removed. (Fig.13)

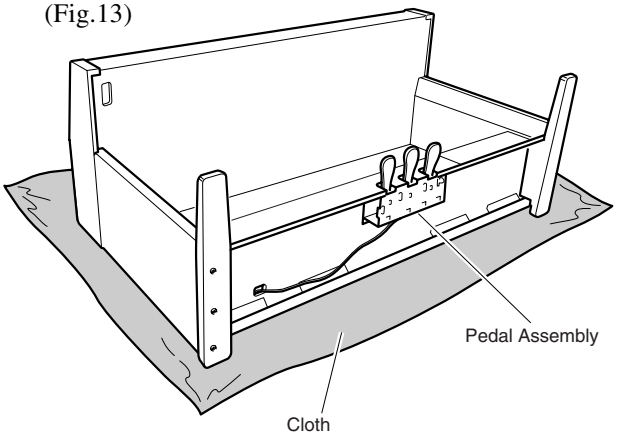

(Fig.12)

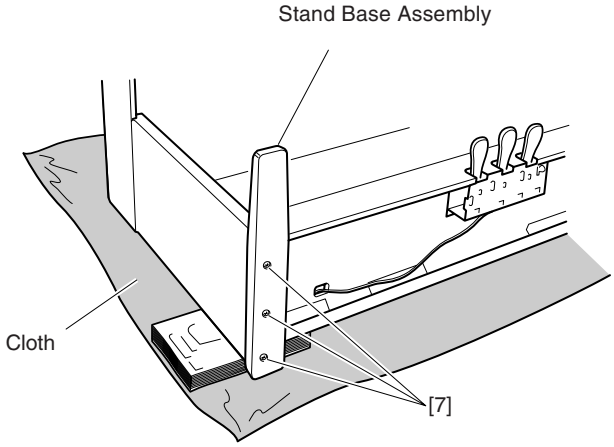

(Fig.13)

[7]: Bind Head Tapping Screw-1 4.0X40 MFZN2Y (V5344700)

15. Pedal Assembly (Time required: about 3 min)

* For safety, make sure to perform by two persons.

15-1. Spread soft cloth on the floor, and lay down the product carefully on its back. (Fig.12)

15-2. Remove the eight (8) screws marked [7]. The pedal assembly can then be removed. (Fig.14)

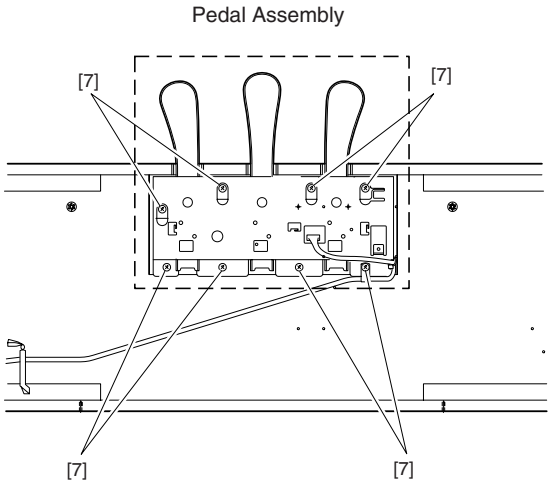

(Fig.14)

[7]: Bind Head Tapping Screw-1 4.0X14 MFZN2Y (EP040230)

16. Main Unit (Time required: about 3 min)

* For safety, make sure to perform by two persons.

* Previously, spread soft cloth on where the main unit will be laid.

* Take care not to catch your fingers between the main unit and the stand when remove the main unit.

16-1. Remome the back board. (See Procedure 13)

16-2. Remove the AC cord and the PK cable. (Fig.15)

16-3. Remove the four (4) screws marked [S2]. (Fig.16)

16-4. Slide the main unit backward, and lift it to remove. (Fig.16)

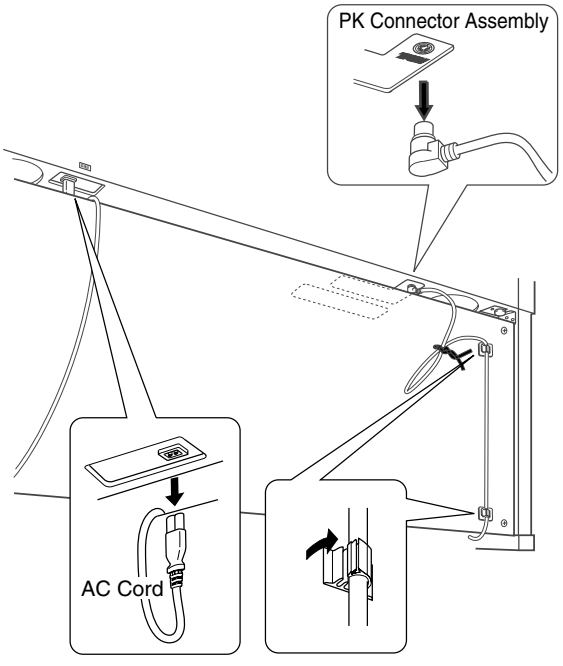

(Fig.15)

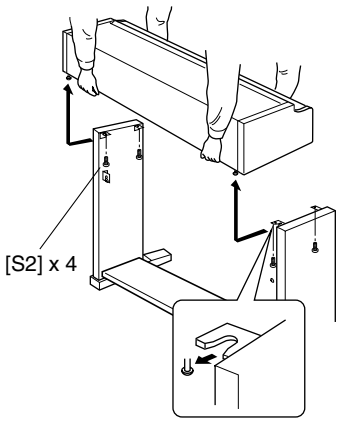

(Fig.16)

[S2]: Bind Head Screw 6.0X16 MFZN2BL (EG360020)

17. Side Cover Assembly L, R (Time required: about 15 min for each)

* For safety, make sure to perform by two persons.

* To remove screws from the bottom, prepare a worktable or bolsters to set the main unit.

17-1. Remove the top board assembly. (See Procedure 1)

17-2. Remove the key cover assembly. (See Procedure 3)

17-3. Remove the panel assembly. (See Procedure 4)

17-4. Remove the end block assembly L, R. (See Procedure 7)

17-5. Remove the keyboard assembly. (See Procedure 10)

17-6. Remove the main unit and lay it on the worktable or bolsters. (See Procedure 16)

17-7. Remove the four (4) screws marked [15a] for each side and the five (5) screws marked [18] for each side. The side cover assembly L, R can then be removed. (Fig.17)

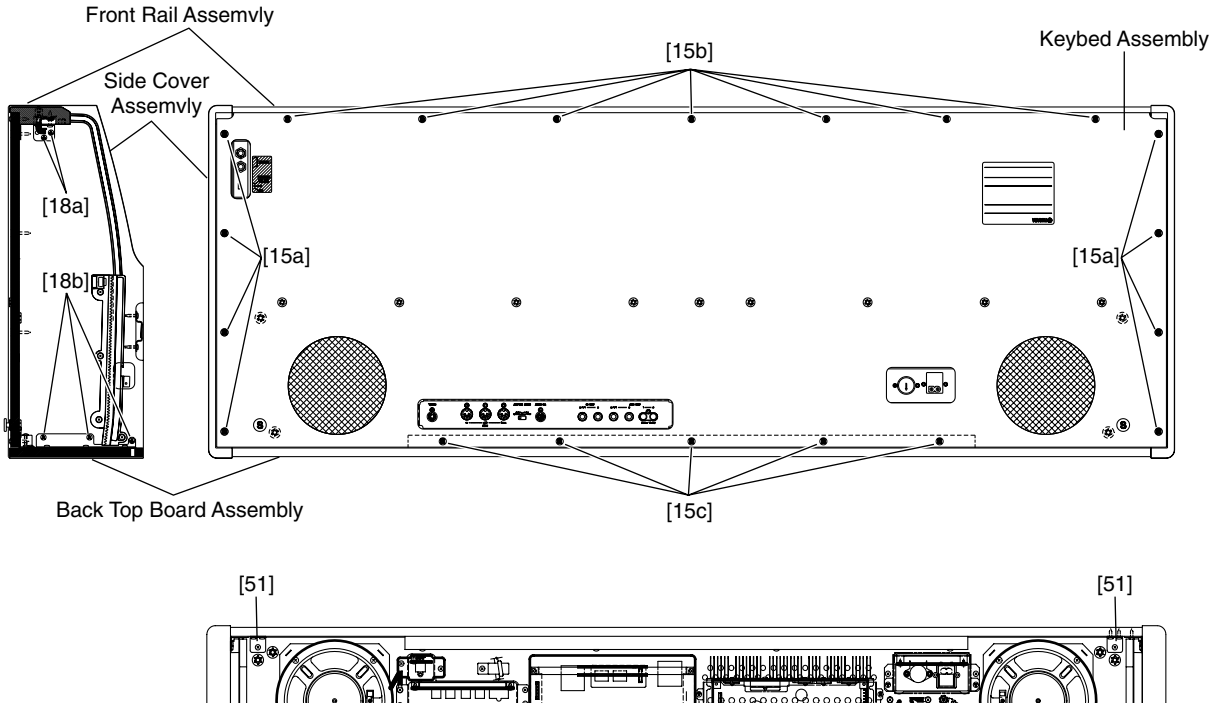

(Fig.17)

[15a]: Truss Head Tapping Screw-1 3.5X30 MFZN2BL (VU952600)
[15b]: Truss Head Tapping Screw-1 3.5X30 MFZN2BL (VU952600)
[15c]: Truss Head Tapping Screw-1 3.5X30 MFZN2BL (VU952600)
[18a]: Bind Head Tapping Screw-1 3.5X16 MFZN2Y (EP030190)
[18b]: Bind Head Tapping Screw-1 3.5X16 MFZN2Y (EP030190)
[51]: Bind Head Tapping Screw-1 3.5X12 MFZN2Y (EP030240)

18. Front Rail (Time required: about 12 min)

18-1. Remove the top board assembly. (See Procedure 1)

18-2. Remove the key cover assembly. (See Procedure 3)

18-3. Remove the panel assembly. (See Procedure 4)

18-4. Remove the end block assembly L, R (See Procedure 7)

18-5. Remove the keyboard assembly. (See Procedure 10)

18-6. Remove the seven screws marked [15b] and the two (2) screws marked [18a] for each side to remove the front rail assembly. (Fig.17)

18-7. Remove the screw marked [10e2] to remove the PL circuit board. (Fig.18)
18-8. Remove the six (6) screws marked [10e1] to remove the keyboard holder assembly. (Fig.18)
18-9. Remove the four (4) screws marked [10f] to remove the angle K. (Fig.18)
* When remove the front rail assembly, take care not to scratch the side cover with the angle K.

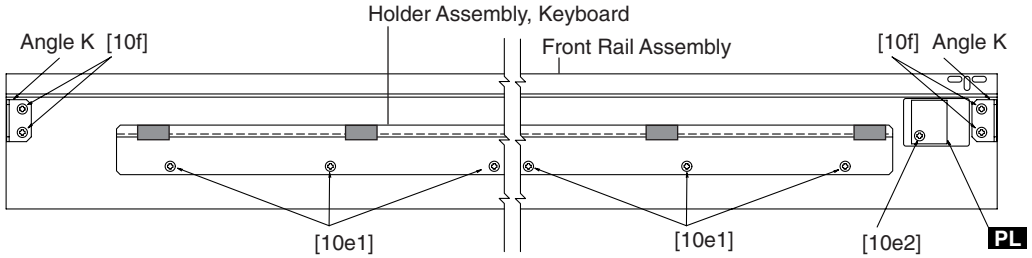

(Fig.18)

[10a]: Bind Head Tapping Screw-1 3.5X12 MFZN2BL (EP030340)
[10e]: Bind Head Tapping Screw-1 3.5X12 MFZN2BL (EP030340)
[10f]: Bind Head Tapping Screw-1 3.5X16 MFZN2BL (EP030260)

19. Back Top Panel Assembly (Time required: about 3 min)

19-1. Remove the top board assembly. (See Procedure 1)
19-2. Remove the five (5) screws marked [15c], two (2) screws marked [51] and the three (3) screws marked [18b] for each side. The back top panel assembly can then be removed. (Fig.17)

20. Side Board Assembly L, R (Time required: about 4 min for each)

* For safety, make sure to perform by two persons.
20-1. Remove the main unit. (See Procedure 16)
20-2. Remove the four (4) screws marked [S4]. The side board assembly L, R can then be removed (Fig.19)

21. Pedal Box Assembly (Time required: about 5 min)

* For safety, make sure to perform by two persons.
21-1. Remove the pedal assembly. (See Procedure 15)
21-2. Remove the four (4) screws marked [S4]. The pedal box assembly can then be removed. (Fig.19)

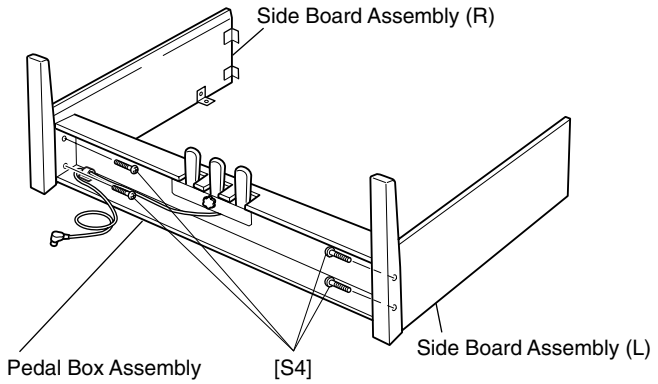

(Fig.19)

[S4]: Truss Head Screw 6.5X25 MFZN2BL (VQ448400)

22. Disassembling the GHD Keyboard (Time required: about 20 min)

* After inserting a round stick (Rod: TX000670) between the frame and keys, remove the circuit boards. (Fig.22)

22-1 Remove the keyboard assembly. (See Procedure 10)

22-2 GHD SW L circuit board.
Remove the seven (7) screws marked [260a]. The GHD SW L circuit board can then be removed. (Fig.20)

22-3 GH-D_SW H circuit board.
Remove the ten (10) screws marked [260b]. The GH-D_SW H circuit board can then be removed. (Fig.20)

* Keys can be removed without removing the circuit boards.

* The rubber contact can be removed, after GH-D_SW L circuit board and GH-D_SW H circuit board are removed.

22-4 White Key
Insert a thin plate between the white keys, near the triangle mark around the fulcrum of the key, and press down the stopper marked [A] to remove the key. (Fig.21 and 22)

* Take care not to damage the key spring when removing a key.

* A black key can be removed after both adjacent white keys have been removed.

22-5 Hammer, White Key
After a key has been removed, push the key spring down once to take it out of the hook. (Fig.23)
Place the GHD keyboard assembly upside down and peel away then stopper L88-W. The hammer of the white key can then be removed. (Fig.24)

* The hammer of a black key can be removed in the same manner.

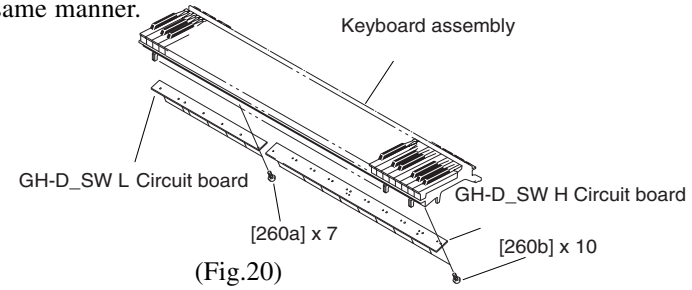

(Fig.20)

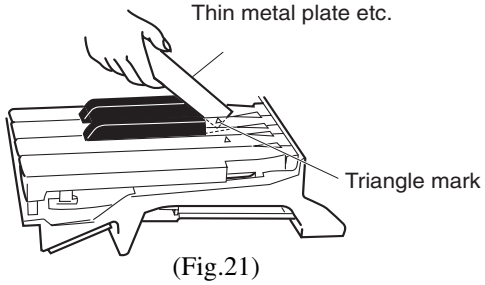

(Fig.21)

[260]: Bind Head Tapping Screw-P 3.0X10 MFZN2 (VT413400)

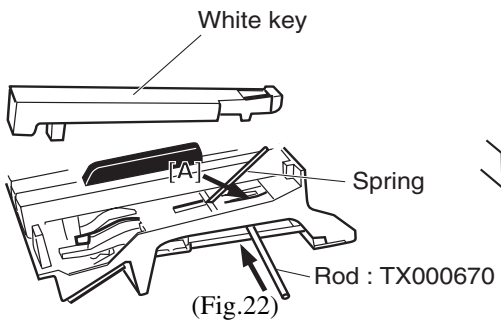

(Fig.22)

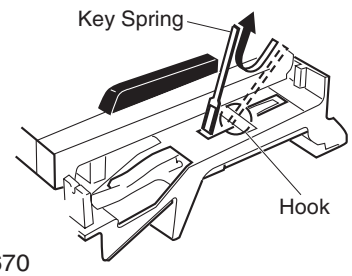

(Fig.23)

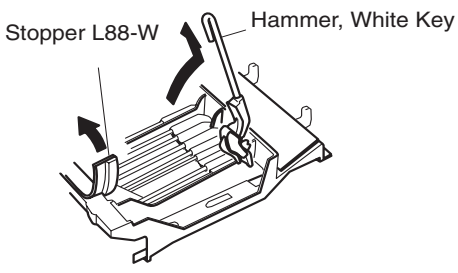

(Fig.24)

23. Assembling the GHD Keyboard

23-1 Hammer of White (Black) Key
Place the keyboard assembly upside down, insert a hammer assembly into the frame, and put the stopper L88-W on. (Fig.25)

* There are four kinds of hammers that differ in weight.

23-2 Key Spring
Place the keyboard assembly right side up, and fix a key spring to the frame by setting it at the slit and pushing it down once. (Fig.26)

* Be careful of the direction of the spring.

23-3 White (Black) Key
After a key has been fit to part [F] and the key guide, make sure that the spring is fixed to the key. Then press part [E] of the key down. (Fig.27)

23-4 GH-D_SW L circuit board.
Tighten the seven [7] screws marked [260a] to fix the GH-D_SW L circuit board. (Fig.20)

23-5 GH-D_SW H circuit board.
Tighten the ten [10] screws marked [260b] to fix the GH-D_SW H circuit board. Set the slits of the rubber contact at the marks on the frame. (Fig.20)

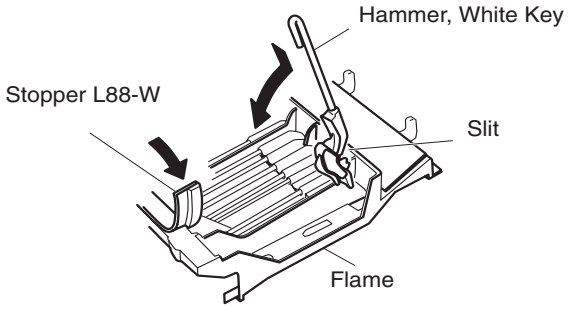

(Fig.25)

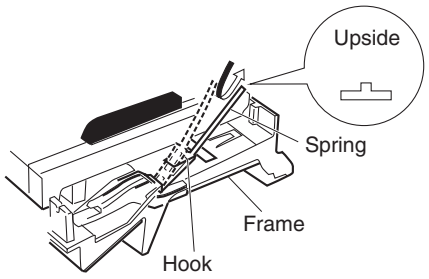

(Fig.26)

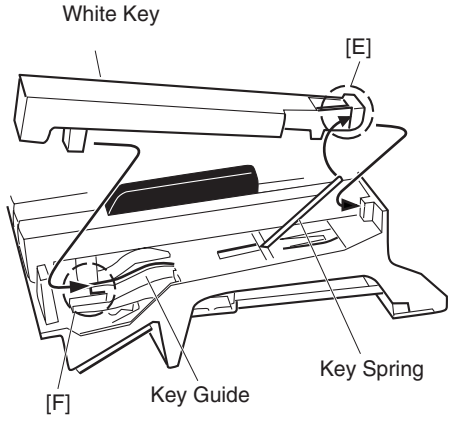

(Fig.27)

■ LSI PIN DESCRIPTION

CONTENTS

- HG73C205AFD XU947C00 SWX00B (TONE GENERATOR) 20
- YMZ702-D XR632A00 KSN2 (Key Scanner) 21

● HG73C205AFD (XU947C00) SWX00B TONE GENERATOR

DM : IC007, 008

PIN NO.	NAME	I/O	FUNCTION	PIN NO.	NAME	I/O	FUNCTION
1	ICN	I	Initial clear	85	CMA3	O	Program address bus
2	RFCLKI	I	PLL Clock	86	CMA8	O	
3	TM2	I	PLL Control	87	CMA2	O	
4	AVDD_PLL		Power supply	88	CRD	O	read signal
5	AVSS_PLL		Ground	89	CMA1	O	Program address bus
6	MODE0	I	SWX dual mode	90	CUB	O	high byte effective signal
7	VCC7		Power supply	91	VCC91		Power supply
8	GND8		Ground	92	GHND92		Ground
9	XIN	I	crystal oscillator	93	CS1	O	CS signal
10	XOUT	O	crystal oscillator	94	CMA0	O	Program address bus
11	MODE1	I	SWX separate mode	95	CLB	O	low byte effective signal
12	TEST0	I	TEST pin	96	CMA12	O	Program address bus
13	TESTON	I	TEST pin	97	CMA11	O	
14	AN0-P40	I	A/D converter	98	CMA10	O	
15	AN1-P41	I		99	CMA9	O	
16	AN2-P42	I		100	GND100		Ground
17	AN3-P43	I		101	CWE	O	write signal
18	AVDD_AN		Power supply	102	CMA16	O	Program address bus
19	AVSS_AN		Ground	103	CMA15	O	
20	TXD0	O	for MIDI or TO-HOST	104	CMA14	O	
21	TXD1	O	for MIDI	105	CMA13	O	
22	EXCLK	I	Crystal oscillator	106	CMD8	I/O	Program memory Data bus
23	SMD11	I/O	Wave memory data bus	107	CMD7	I/O	
24	SMD4	I/O		108	CMD9	I/O	
25	SMD3	I/O		109	CMD6	I/O	
26	SMD12	I/O		110	CMD10	I/O	
27	SMD10	I/O		111	CMD5	I/O	
28	SMD5	I/O		112	CMD11	I/O	
29	SMD2	I/O		113	CMD4	I/O	
30	SMD13	I/O		114	CMD12	I/O	
31	SMD9	I/O		115	CMD3	I/O	
32	SMD6	I/O		116	CMD13	I/O	
33	SMD1	I/O		117	CMD2	I/O	
34	SMD14	I/O		118	CMD14	I/O	
35	VCC35		Power supply	119	VCC119		Power supply
36	GND36		Ground	120	GND115		Ground
37	SMD8	I/O	Wave memory data bus	121	CMD1	I/O	Program memory Data bus
38	SMD7	I/O		122	CMD15	I/O	
39	SMD0	I/O		123	CMD0	I/O	
40	SMD15	I/O		124	CMA21	O	Program address bus
41	SOE	O	read signal	125	PDT15	I/O	SWX access data bus
42	SWE	O	write signal	126	PDT14	I/O	
43	SRAS	O	RAS signal	127	PDT13	I/O	
44	SCAS	O	CAS signal	128	PDT12	I/O	
45	REFRESH	O	REFRESH signal	129	PDT11	I/O	
46	CS0	O	CS signal	130	PDT10	I/O	
47	SMA0	O	Memory address bus	131	PDT9	I/O	
48	SMA16	O		132	PDT8	I/O	
49	VCC49		Power supply	133	VCC133		Power supply
50	GND50		Ground	134	GND134		Ground
51	SMA1	O	Memory address bus	135	PDT7	I/O	SWX access data bus
52	SMA15	O		136	PDT6	I/O	
53	SMA2	O		137	PDT5	I/O	
54	SMA14	O		138	PDT4	I/O	
55	SMA3	O		139	PDT3	I/O	
56	SMA13	O		140	PDT2	I/O	
57	SMA4	O		141	PDT1	I/O	
58	SMA12	O		142	PDT0	I/O	
59	SMA5	O		143	VCA143		Power supply
60	GND60		Ground	144	GND144		Ground
61	VCC61		Power supply	145	PAD2	I	SWX access address bus
62	SMA11	O	Memory address bus	146	PAD1	I	
63	SMA6	O		147	PAD0	I	
64	SMA10	O		148	VCC148		Power supply
65	SMA7	O		149	GND149		Ground
66	SMA9	O		150	PCS	I	Chip select
67	SMA17	O		151	PWR	I	write enable
68	SMA8	O		152	PRD	I	read enable
69	SMA18	O		153	RXD0	I	for Midi or TO-HOST
70	SMA19	O		154	RXD1	I	for Midi or Key scan
71	SMA20	O		155	SCLKI	I	EXT Clock
72	SMA21	O		156	ADIN	I	A/D converter
73	SMA22	O		157	ADLR	O	A/D converter LR clock
74	SMA23	O		158	DO0	O	DAC
75	CMA20	O	Program address bus	159	DO1	O	
76	CMA19	O		160	SYSCLK	O	1/2 clock
77	VCC77		Power supply	161	VCC161		Power supply
78	GND78	O	Ground	162	GND162		Ground
79	CMA18	O	Program address bus	163	WCLK	O	for DAC LR clock
80	CMA17	O		164	QCLK	O	1/12 clock
81	CMA5	O		165	BCLK	O	IIS-DAC clock
82	CMA6	O		166	SYI	I	Synch signal
83	CMA4	O		167	IRQ0	I	Interrupt request
84	CMA7	O		168	NMI	I	

● **YMZ702-D** (XR632A00) **KSN2** (Key Scanner) GH-D_SW L: KSN2

PIN NO.	NAME	I/O	FUNCTION	PIN NO.	NAME	I/O	FUNCTION
1	BK5	O	Key block (open drein)	21	GND		Ground
2	BK4	O		22	VDD		Power supply
3	BK3	O		23	SO	O	Serial data
4	BK2	O		24	ACK	I	Acknowledge/mode select
5	BK1	O		25	XCK	I	Clock for serial data
6	BK0	O		26	/IC	I	Initial clear
7	MK15	I	First make contact	27	TST1	I	Test mode
8	MK14	I		28	TST2	I	(L,L: normal mode, others: test)
9	MK13	I		29	XCKINH	I	Inhibit of serial clock
10	MK12	I		30	BK14	O	Key block (open drein)
11	MK11	I		31	BK13	O	
12	MK10	I		32	BK12	O	
13	MK05	I	Second make contact	33	BK11	O	
14	MK04	I		34	BK10	O	
15	MK03	I		35	BK9	O	
16	MK02	I		36	BK8	O	
17	MK01	I		37	BK7	O	
18	MK00	I		38	BK6	O	
19	XIN	I	Crystal osc. input (4 MHz)	39	GND		Ground
20	XOUT	O	Crystal osc. output (4 MHz)	40	VDD		Power supply

■ IC BLOCK DIAGRAM

● **TD62083F-TP1** (XN153A00)
● **TD62083F-EL** (X2550A00)
8ch Driver Array DM: IC004

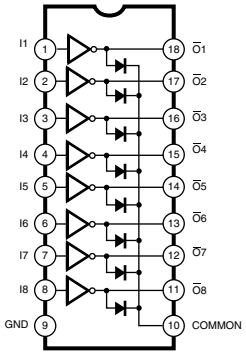

● **TC74HC138AFEL** (XW762A00)
3 to 8 Demultiplexer DM: IC006

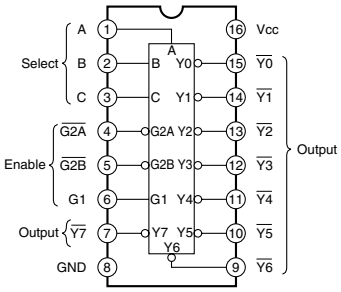

● **SN74C1168NSR** (XU073A00)
Line Driver/Receiver DJK: IC002

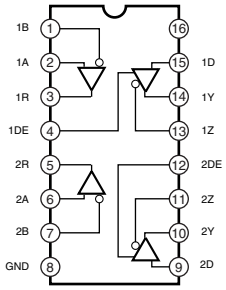

● **PCM69AU-3/TE2** (XV297A00)
DIGITAL-TO-ANALOG CONVERTER
DM: IC010

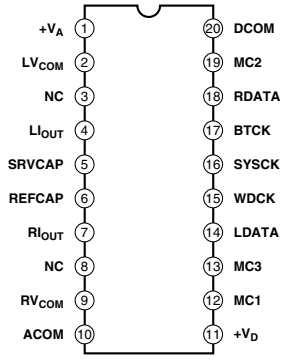

● **TC7S00F** (XG150A00)
NAND DM: IC026

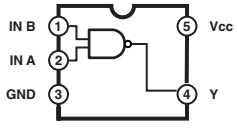

● **TC7S32F** (XM588A00)
OR DM: IC025

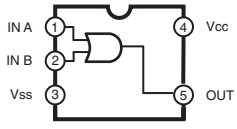

- **SC7SU04FEL** (XI348A00)
- **TC7SU04F** (XY447A00)

Inverter Gate DJK: IC001

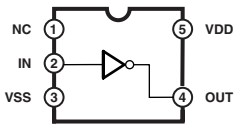

- **μPC4570G2** (XF291A00)

Dual Operational Amplifier

AJK: IC100
DM: IC013, IC022

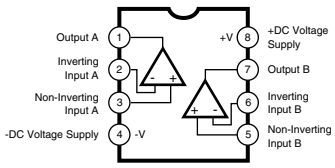

- **LA6517M-TE-R** (XT131A00)

Dual Low Voltage Power Amplifier

AJK: IC200

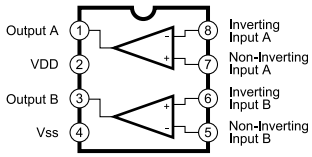

- **M5229FP** (XY487A00)

7 Band Graphic Equalizer

AJK: IC300, IC400

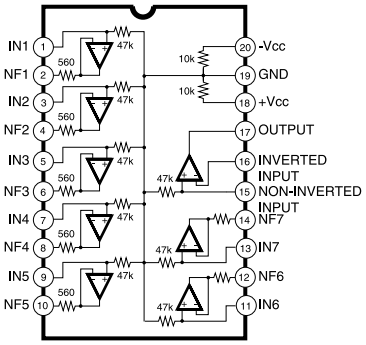

- **TC7S04F** (XM182A00)

Inverter Gate

DM: IC032

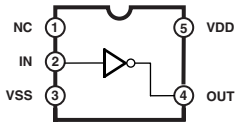

■ CIRCUIT BOARDS

CONTENTS

- DM Circuit Board (XO566D0) 24
- AJK Circuit Board (X2246B0) 26
- DJK Circuit Board (X2245B0) 27
- MA60 Circuit Board (XQ393E0) 28
- FU60 Circuit Board (XQ395A0) 29
- PNR Circuit Board (XO520D0) 30
- PNL Circuit Board (XO520D0) 31
- PEDAL Circuit Board (XR780B0) 32
- PEDAL (DJK) Circuit Board (X2245B0) 32
- HP Circuit Board (X2242B0) 32
- PL Circuit Board (XR898A0) 32
- NET1 Circuit Board (XT123B0) 32

• **DM Circuit Board**

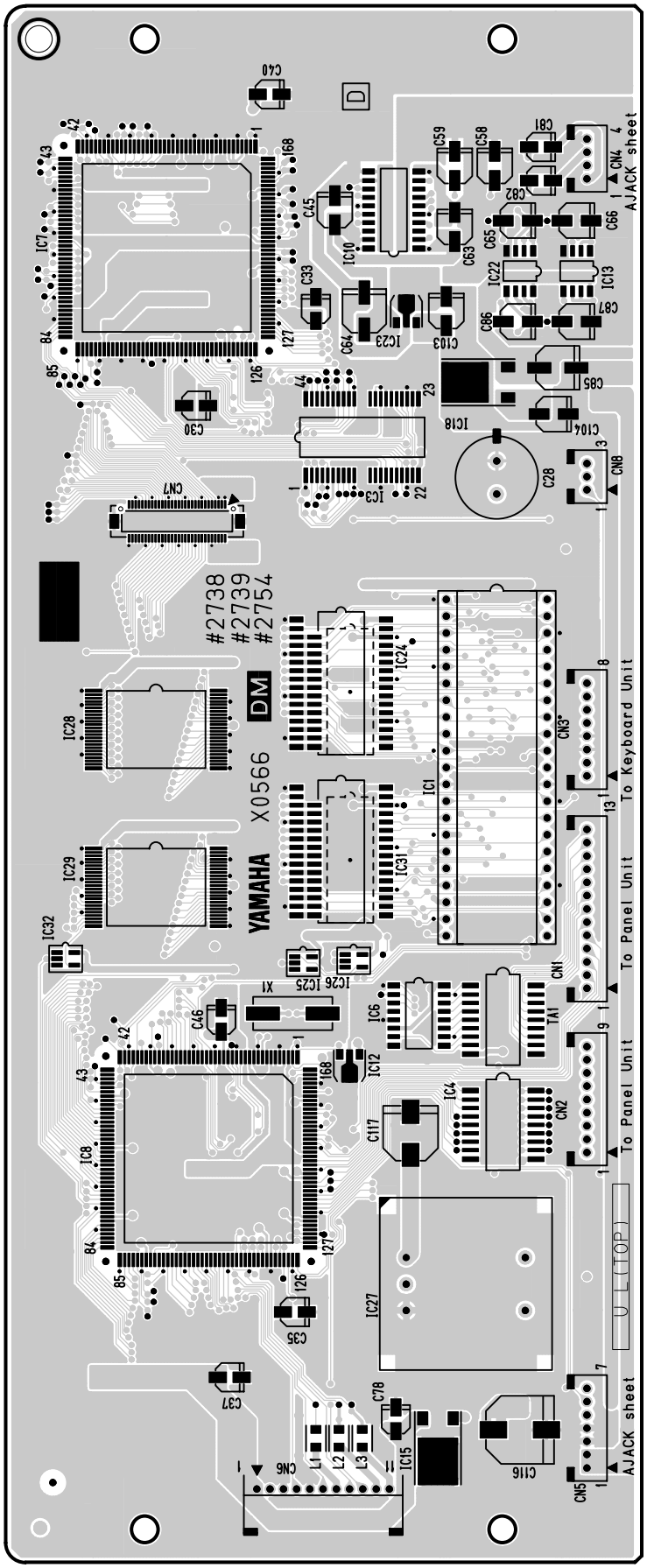

2NA-849560

• **DM Circuit Board**

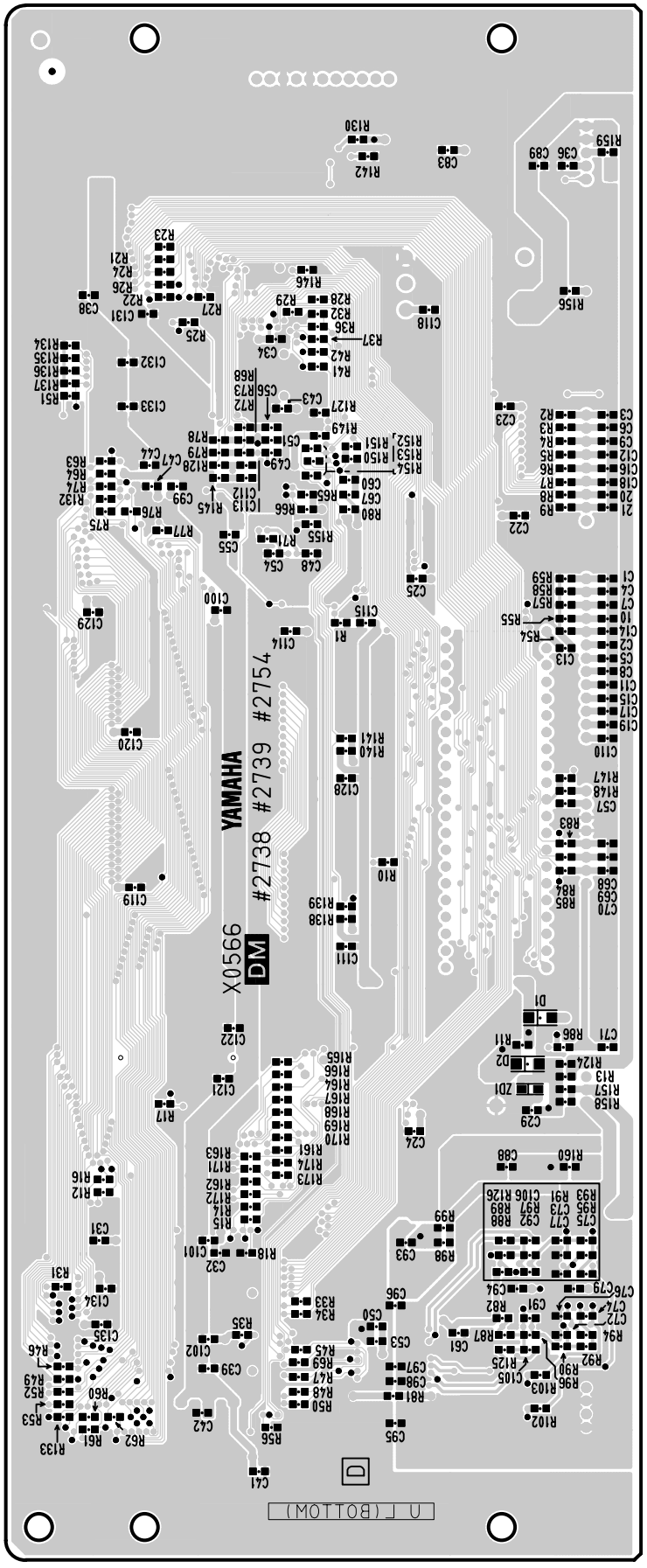

Pattern Side

Note: See parts list for details of circuit board component parts.

• AJK Circuit Board

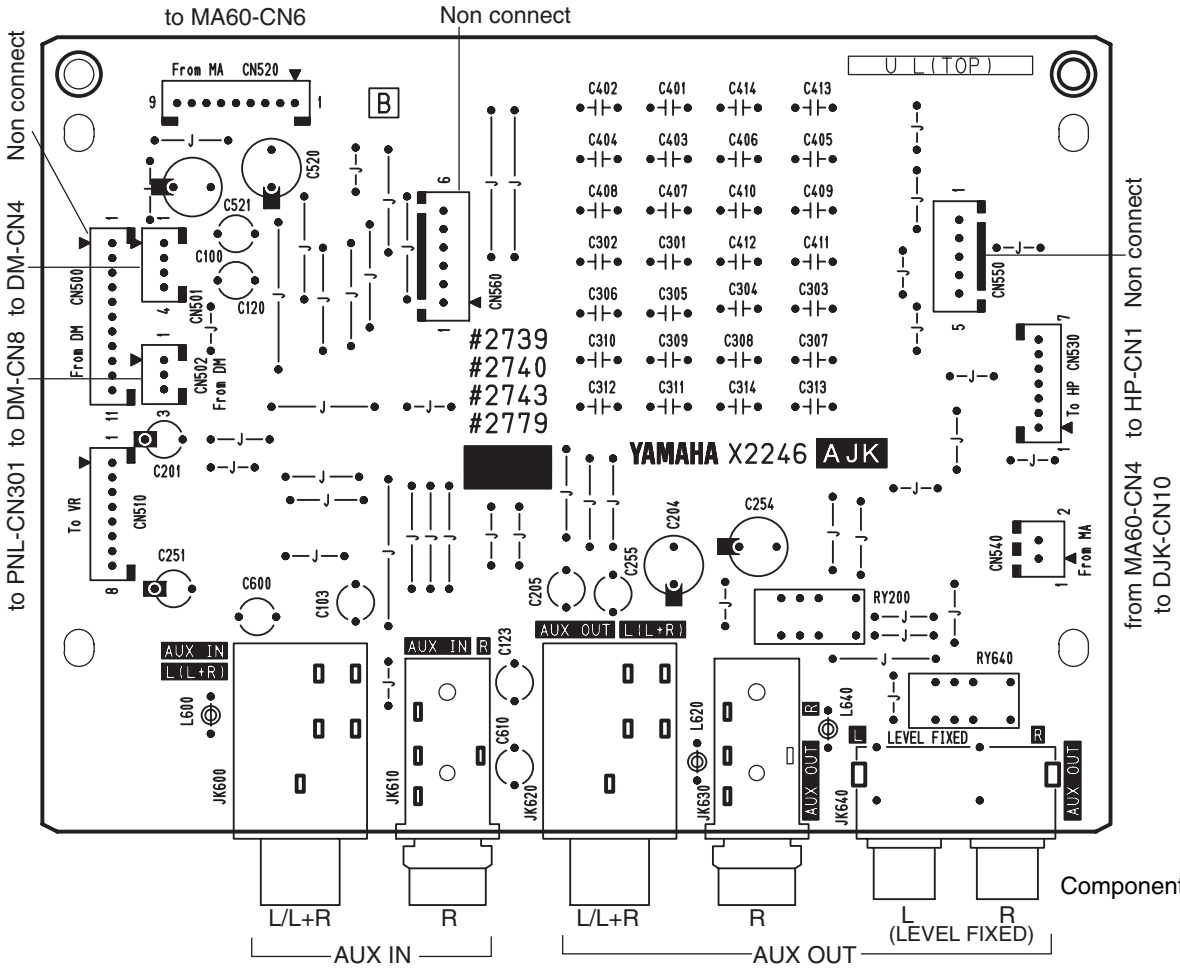

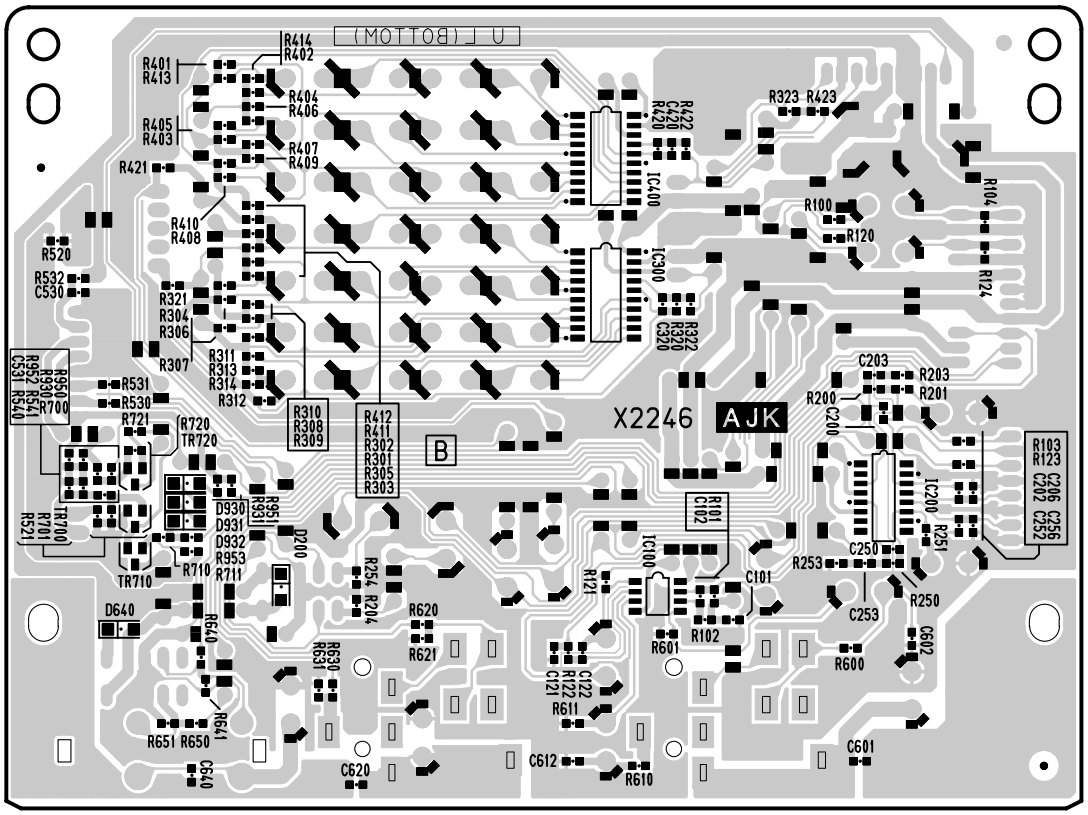

2NA-V849980

Note: See parts list for details of circuit board component parts.

• DJK Circuit Board

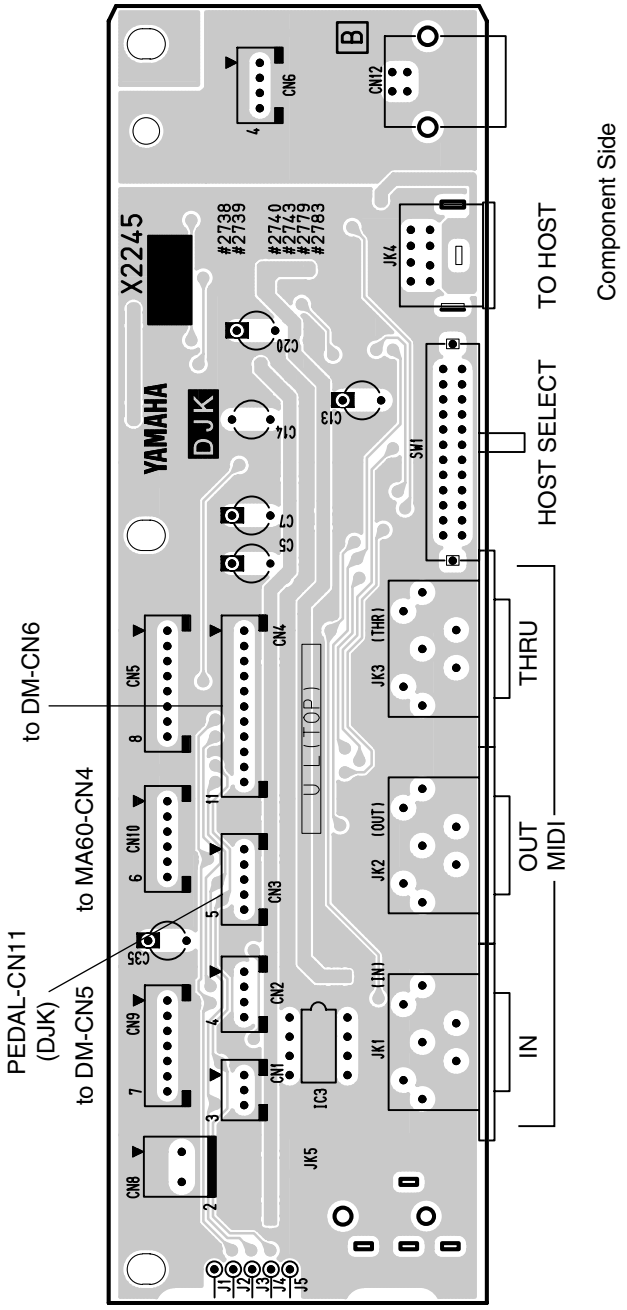

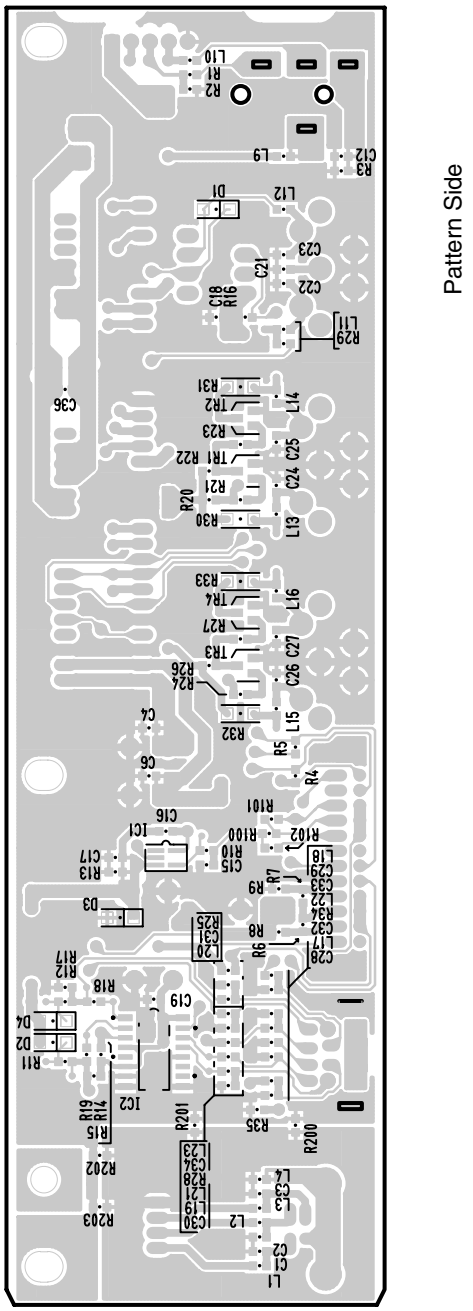

Note: See parts list for details of circuit board component parts.

- **MA60 Circuit Board**

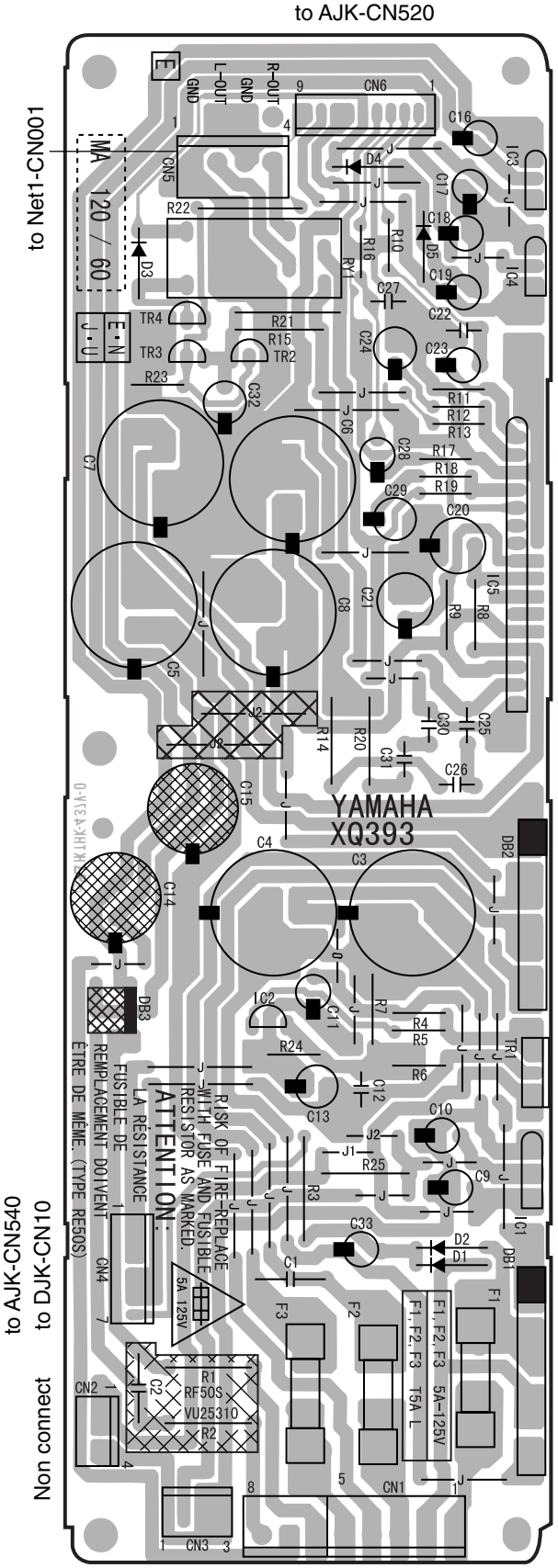

Note: See parts list for details of circuit board component parts.

2NA-VT14390

• **FU60 Circuit Board**

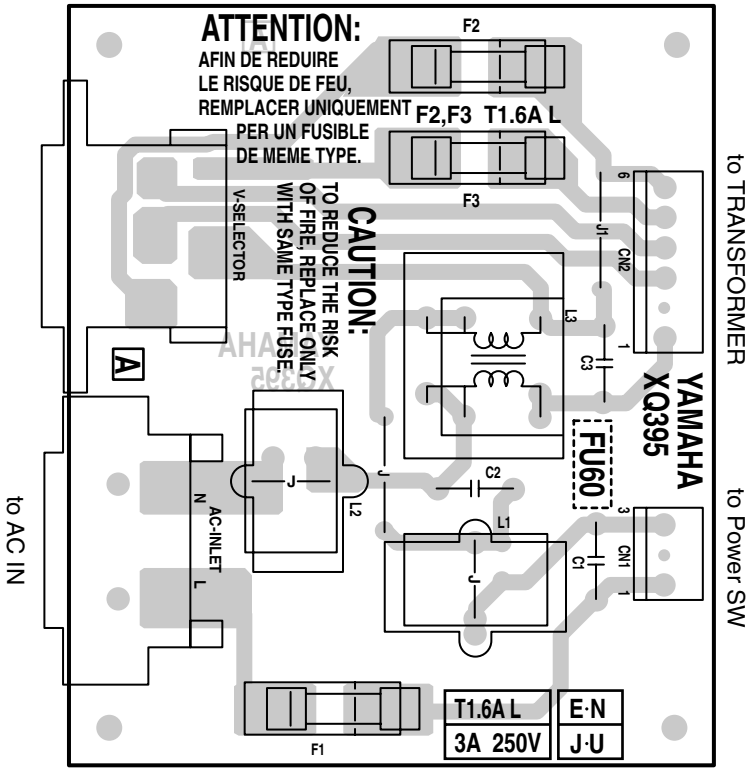

Note: See parts list for details of circuit board component parts.

• **PNR Circuit Board**

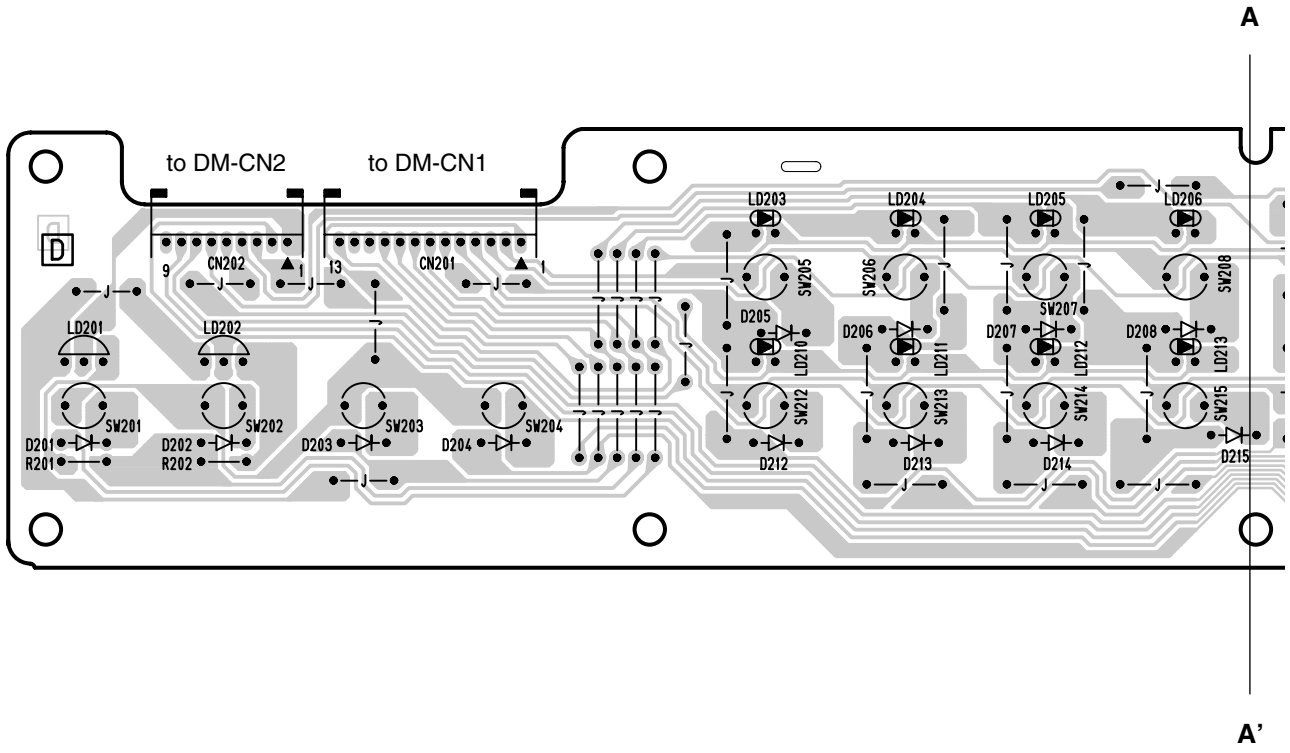

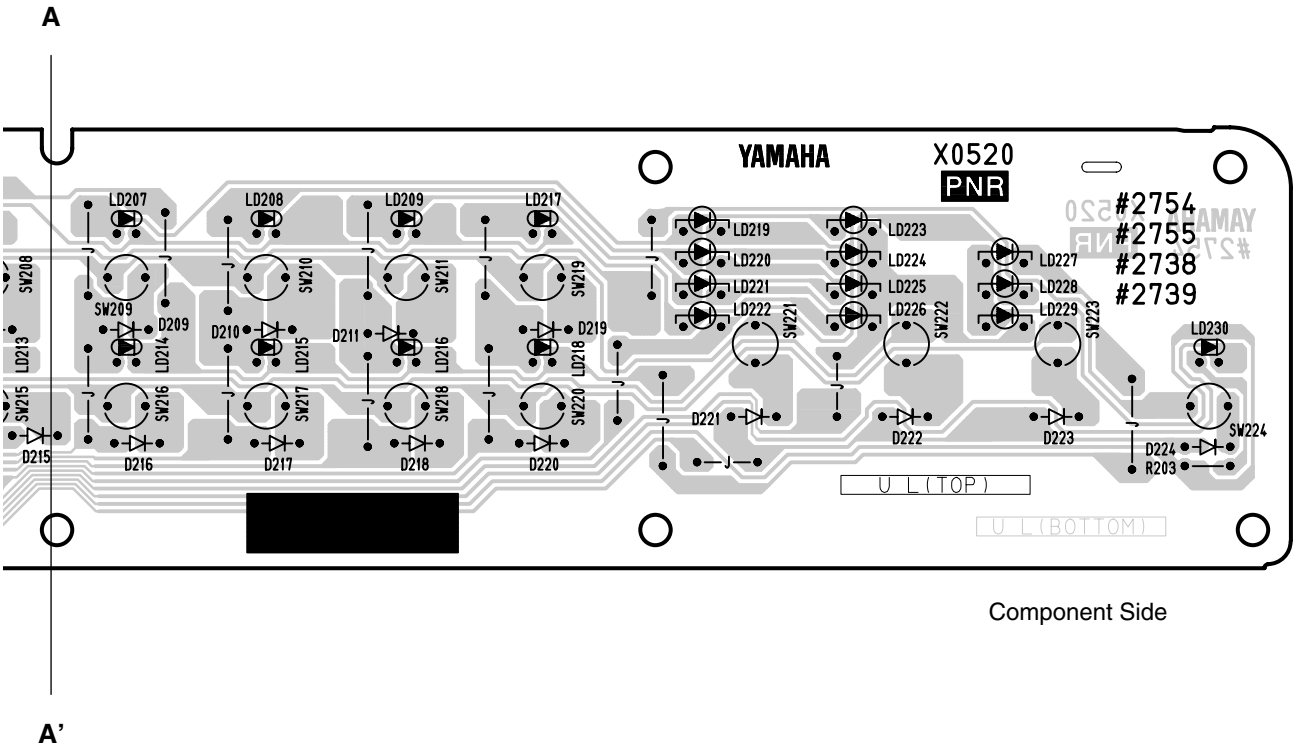

Component Side

Note: See parts list for details of circuit board component parts.

2NA-V791030

• **PNL Circuit Board**

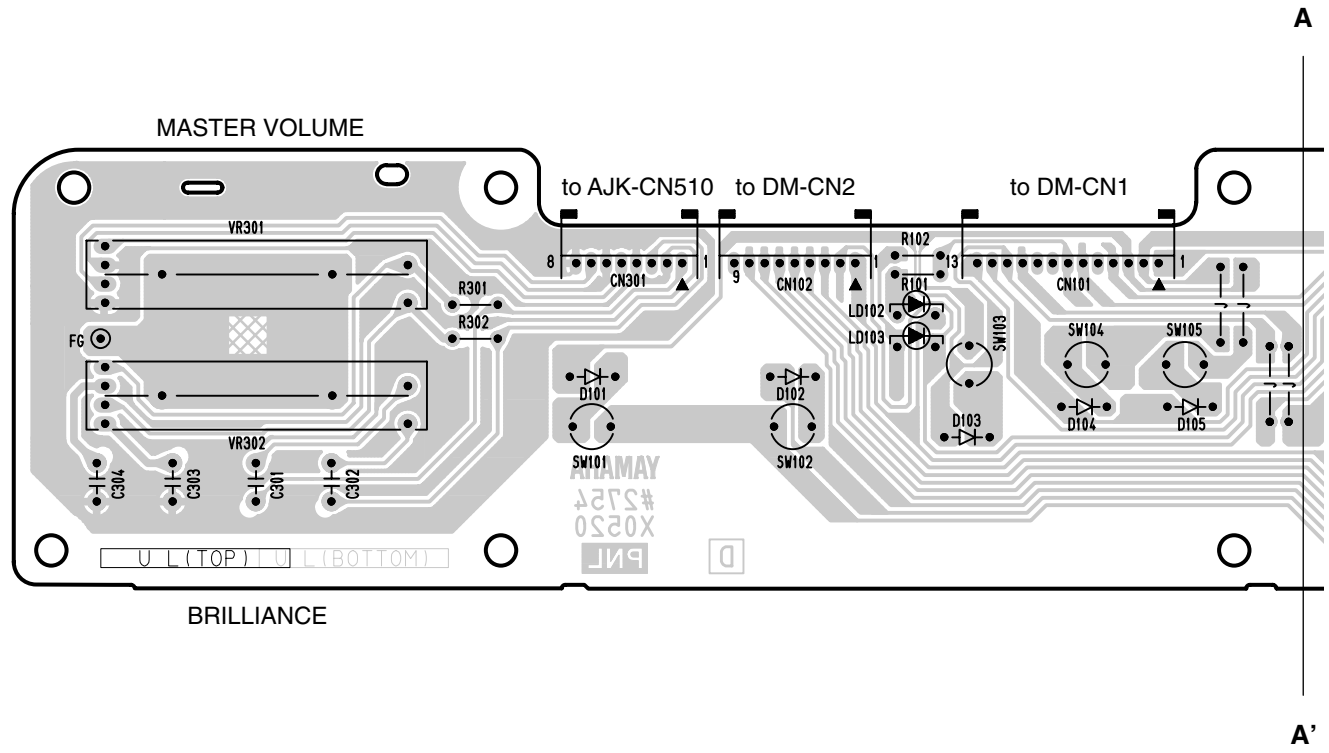

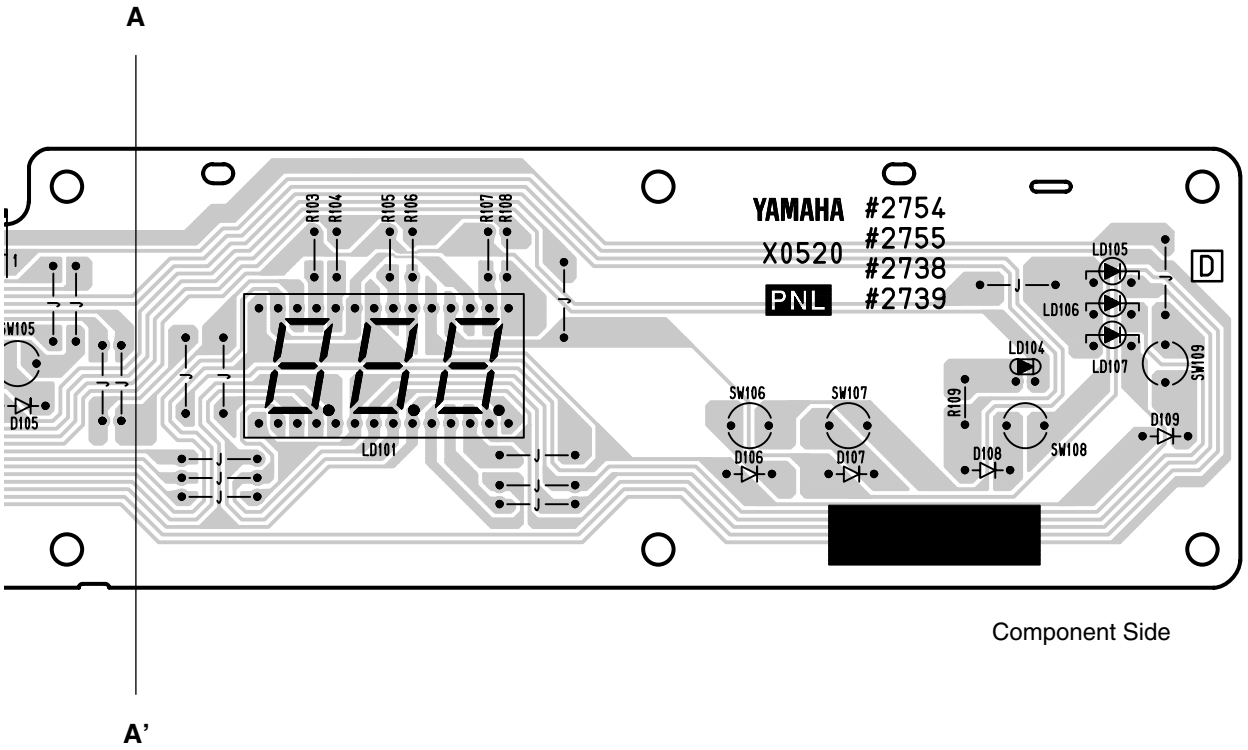

Note: See parts list for details of circuit board component parts.

2NA-V791020

• **PEDAL Circuit Board**

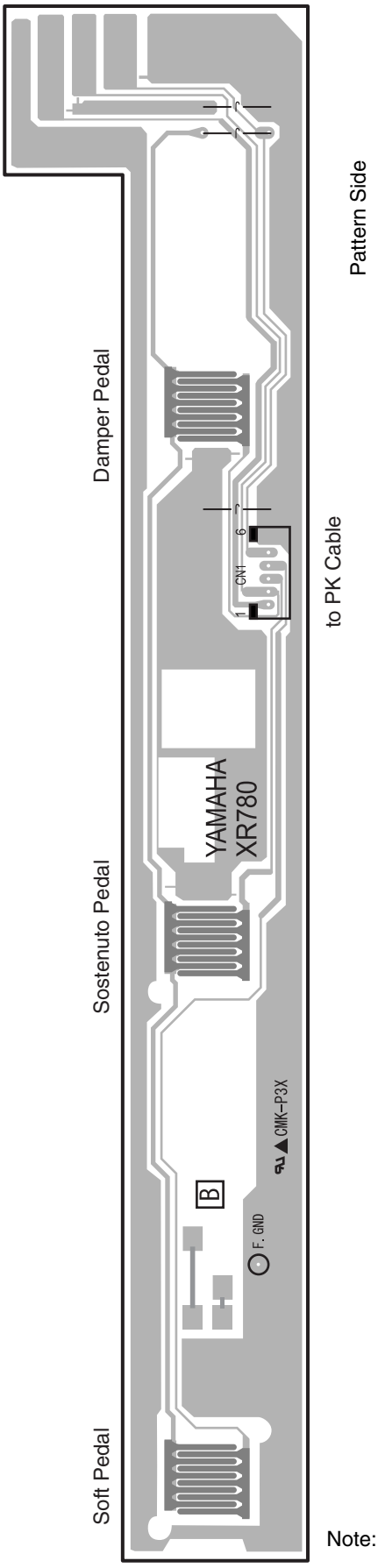

• **PEDAL (DJK) Circuit Board**

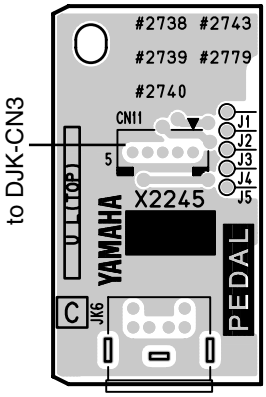

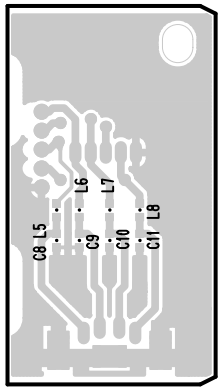

• **HP Circuit Board**

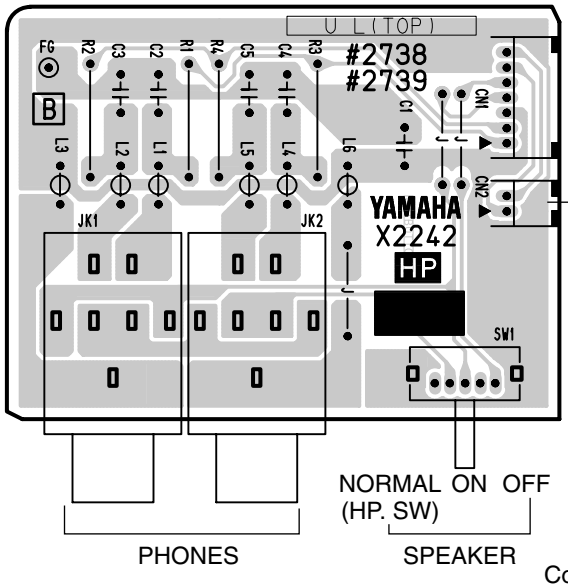

• **PL Circuit Board**

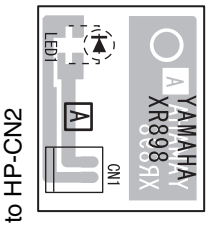

• **Net1 Circuit Board**

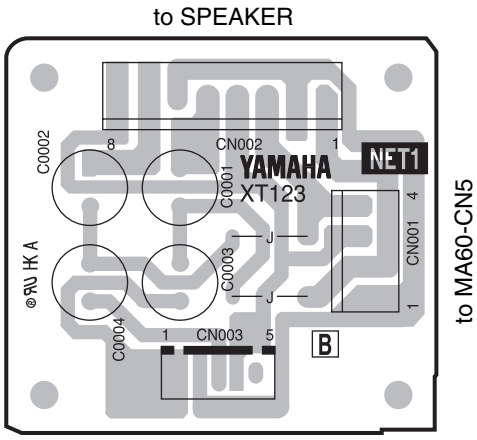

PEDAL: 2NA-V233730
PEDAL (DJK): 2NA-V849620
HP: 2NA-V858650
PL: 2NA-VN63760
Net1: 2NA-V770820

Note: See parts list for details of circuit board component parts.

■ INSPECTION

1. Preparation

- To check the unit, following mesuring instruments are required.
  Level meter (JIS-C filter)
  Frequency counter

- Set each control as follows.
  MASTER VOLUME: MAX
  BRILLIANCE: CENTER
  Voice: GRAND PIANO 1
  PEDAL: OFF
  REVERB: OFF
  SPEAKER ON/OFF switch: NORMAL

  AUX IN, AUX OUT: Connect a load resistance to all terminals. (Load resistance for AUX OUT is 10kΩ)
  HEADPHONE: Connect a load resistance (33Ω) to either terminal.

2. Entering the Test Program

Turn on the power with (C2#), (F2), (G2#) keys pressed and held. (Fig.1)
The test program will run and the 7segment LED will indicate 'TST'. (Fig.2)

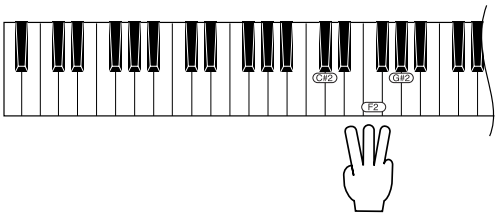

(Fig.1)



(Fig.2)

3. Proceeding the Test

See the Table 1 for the test items.
(1) Press TEMPO/FUNCTION# [▼] or [▲] button to select a test item.
(2) Press SONG [START/STOP] button to execute the current test.
(3) After executing the current test, press SONG [START/STOP] button to return to the wait state.
(4) If the test result is NG, press [DEMO] button to return to the wait state.

Table 1 Test Items

No.	7 segment. LED	Test Function and Judgment criteria
1	F01: Version 'Px.x' 'Ux.x'	Checks ROM version. Make sure that the 7-seg.LED alternately indicates 'Px.x' (version of the program) and 'Ux.x' (version of the wave).
2	F02: ROM Check 1 PAS	ROM Check All ROMs on the CPU bus are checked. If the result is OK, 7segment LED indicates 'PAS'
3	F03: RAM Check 1 PAS	RAM Check All RAMs on the CPU bus are checked. If the result is OK, 7segment LED indicates 'PAS'
4	F04: Wave ROM Check1 PAS	Wave ROM Check If the result is OK, 7segment LED indicates 'PAS'
11	F 11: TG1 Check FG 1	Tone Generator 1 Check The sine waves automatically sounds from F3 to C6 in sequence.
12	F 12: TG2 Check FG2	Tone Generator 2 Check The sine waves automatically sounds from F3 to C6 in sequence.
13	F 13: Pitch Check P IF	Pitch Check Confirm that the sine wave of 440.0±0.2 Hz is output.
14	F 14: OUTPUT R OPF	OUTPUT R Check (1kHz) Confirm that the output level of each terminal is as follows. (Unit dBm) FIXED AUX OUT/L less than R - 50 FIXED AUX OUT/R +4.5 AUX OUT L less than R - 50 AUX OUT R +4.5 PHONES L less than R - 40 PHONES R +0.5
15	F 15: OUTPUT L OPL	OUTPUT L Check (1kHz) Confirm that the output level of each terminal is as follows. (Unit dBm) FIXED AUX OUT/L +4.5 FIXED AUX OUT/R less than L - 50 AUX OUT L +4.5 AUX OUT R less than L - 50 PHONES L +0.5 PHONES R less than L - 40
16	F 16: EQ Low EQL	EQ Low Check (for factory test only)
17	F 17: EQ Mid EQM	EQ Mid Check (for factory test only)
18	F 18: EQ High EQH	EQ High Check (for factory test only)
19	F 19: D/A Noise dA	D/A Noise Check Play any key with the damper pedal pressed and held, and confirm that no D/A noise is generated.

20	C20: SW, LED Check PAS	Switch, LED Check Making reference to the Table 2 (see p. 39), press the switch corresponding to the number indicated on the 7segment LED. If the correct switch is pressed, the sine wave sounds on the pitch shown in the Table 2 and the 7segment LED indicates the next number. In addition, the LED lights up as for the LED-attached switch. If the wrong switch is pressed, the 7segment LED indicates 'nG'. After the last switch is checked, the 7segment LED indicates 'PAS'.
21	C21: All LED ON 8.8.8.	All LED ON Check Confirm that all LEDs on the panel light up.
31	C31: Soft Pedal Check PE1 Str PAS	Soft Pedal Check When the soft pedal is depressed, the sine wave of C3 sounds and 7segment LED indicates 'Str'. When the pedal is released, the sine wave of C4 sounds and 7segment LED indicates 'PAS'.
32	C32: Sostenuto Pedal Check PE2 Str PAS	Sostenuto Pedal Check When the sostenuto pedal is depressed, the sine wave of C3 sounds and 7segment LED indicates 'Str'. When the pedal is released, the sine wave of C4 sounds and 7segment LED indicates 'PAS'.
33	C33: Damper Pedal Check PE3 Str PAS	Damper Pedal Check When the damper pedal is depressed, the sine wave of C3 sounds and 7segment LED indicates 'Str'. When the pedal is released, the sine wave of C4 sounds and 7segment LED indicates 'PAS'.
37	C37: MIDI Check PAS	MIDI Check Connect MIDI IN and MIDI OUT terminal by a MIDI cable and execute the test. Confirm that the 7segment LED indicates 'PAS'.
38	C38: To Host Check PAS	TO HOST Check Short-circuit pin3 and pin5, pin6 and pin8 of TO HOST terminal respectively and execute the test. Select the position of HOST SELECT switch according to the 7segment LED display, and confirm that the following note sounds and 7segment LED indicates 'PAS'. PC-1 position: C3, PC-2 position: C4, MAC position: C5
41	C41: ROM Check2	ROM Check 2 (for factory test only)
42	C42: RAM Check2	RAM Check 2 (for factory test only)
43	C43: Wave ROM Check2	Wave ROM Check 2 (for factory test only)
46	C46: Backup Check2	Backup Check 2 (for factory test only)
47	C47: Factory Set FAC	Factory Initializes all RAMs to the factory preset data.
48	C48: Test Exit	Exit the test program and return to the play mode.

Note: 0dBm = 0.775V

• **Table 2**

SW No.	SWITCH	NOTE	LED
S01	DEMO	C3	
S02	METRONOME	C#3	
S03	TEMPO/FUNCTION	D3	○
S04	TEMPO ▼	D#3	
S05	TEMPO ▲	E3	
S06	-/NO	F3	
S07	+/YES	F#3	
S08	PRESET	G3	○
S09	USER 1/2/3	G#3	○
S10	TRACK1	A3	○
S11	TRACK2	A#3	○
S12	START/STOP	B3	
S13	REC	C4	
S14	GRAND PIANO1	C#4	○
S15	GRAND PIANO2	D4	○
S16	E.PIANO1	D#4	○
S17	E.PIANO2	E4	○
S18	HARPSICHORD	F4	○
S19	E.CLAVINET	F#4	○
S20	VIBRAPHONE	G4	○
S21	CHURCH ORGAN	G#4	○
S22	JAZZ ORGAN	A4	○
S23	STRINGS	A#4	○
S24	CHOIR	C5	○
S25	GUITAR	C#5	○
S26	WOOD BASS	D5	○
S27	E.BASS	D#5	○
S28	VARIATION	E5	○
S29	SPLIT	F5	○
S30	REVERB	F#5	○
S31	EFFECT	G5	○
S32	TOUCH	G#5	○
S33	TRANSPOSE	A5	○

■ MIDI IMPLEMENTATION CHART

YAMAHA [Clavinova] Date: 24-OCT-2001
Model: CLP-130/120 MIDI Implementation Chart Version: 1.0

Function		Transmitted	Recognized	Remarks
Basic	Default	1	1	
Channel	Changed	1 - 16	1 - 16	
	Default	3	1 *1	
Mode	Messages	X	X	Poly Mode only
	Altered	**********	X	
Note		9 - 120	0 - 127	
Number	: True voice	**********	0 - 127	
Velocity	Note ON	O 9nH, v=1 - 127	O 9nH, v=1 - 127	
	Note OFF	O 9nH, v=0	O 9nH, v=0 or 8nH	
After	Key s	X	X	
Touch	Ch s	X	X	
Pitch Bender		X	X	
Control Change	0, 32	O	O	Bank Select
	7	O	O	Volume
	11	O	O	Expression
	64	O	O	Damper
	66	O	O	Sostenuto
	67	O	O	Soft pedal
	91	O	O	Reverb Depth
	94	O	O	Effect Depth
Program		O	O	
Change	: True #	**********		
System Exclusive		O	O	
	: Song Position	X	X	
Common	: Song Select	X	X	
	: Tune	X	X	
System	: Clock	O	O	
Real Time	: Commands	O	O	
	: All sounds off	O	O (120, 126, 127)	
Aux	: Reset All Controllers	O	O (121)	
	: Local ON/OFF	X	O (122)	
Mes-	: All Notes OFF	O	O (123 - 125)	
sages	: Active Sense	O	O	
	: Reset	X	X	

Notes : *1 = Recieve Mode is always multi timbre and Poly mode.

Mode 1: OMNI ON, POLY
Mode 2: OMNI ON, MONO
Mode 3: OMNI OFF, POLY
Mode 4: OMNI OFF, MONO

O : Yes
X : No

■ CLP-130 CIRCUIT DIAGRAM 1/3 (DM)

DM

PROG	R147	R148
16M	NO	YES
32M	YES	NO

SRAM	R138	R139	R140	R141
1M	NO	YES	NO	YES
256K	YES	NO	YES	NO

to GHDcl SW L-CN1

to PNL-CN101
to PNR-CN201

to PNL-CN102
to PNR-CN202

to DJK-CN9

to DJK-CN4

to AJK-CN502

to AJK-CN501

PROGRAM ROM

SRAM

SRAM

REGULATOR +3.3V

NAND

OR

DEMULTIPLEXER

SWX00B
IC8
SWX00

SYSTEM RESET

DRIVER ARRAY

EFFECT DRAM

SWX00B
IC7
SWX00

WAVE ROM 1

WAVE ROM 2

INVERTER

REGULATOR +5V

D/A CONVERTER

OP AMP

A G N D

- µPC2933T(XS516A00)
  REGULATOR +3.3V
  DM:IC015

1: V in
2: GND
3: V out

- µPC78L05T (XS721A00)
  REGULATOR +5V
  DM:IC023

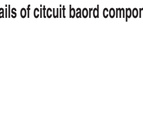

1: INPUT
2: GND
3: OUTPUT

- M51951AML(XR063A00)
  SYSTEM RESET
  DM:IC012

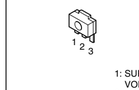

1: SUPPLY VOLTAGE
2: GND
3: OUTPUT

- NJMJ78L05UA(XJ598A00)
  REGULATOR +5V
  DM:IC023

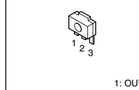

1: OUTPUT
2: COMMON
3: INPUT

28CC1-8822660

（セ）： Ceramic Capacitor
セラミックコンデンサー

Note: See parts list for details of citcuit baord component parts.

■ CLP-130 CIRCUIT DIAGRAM 2/3 (AJK, DJK, FU60, MA60, HP, PL, PEDAL JACK, PEDAL)

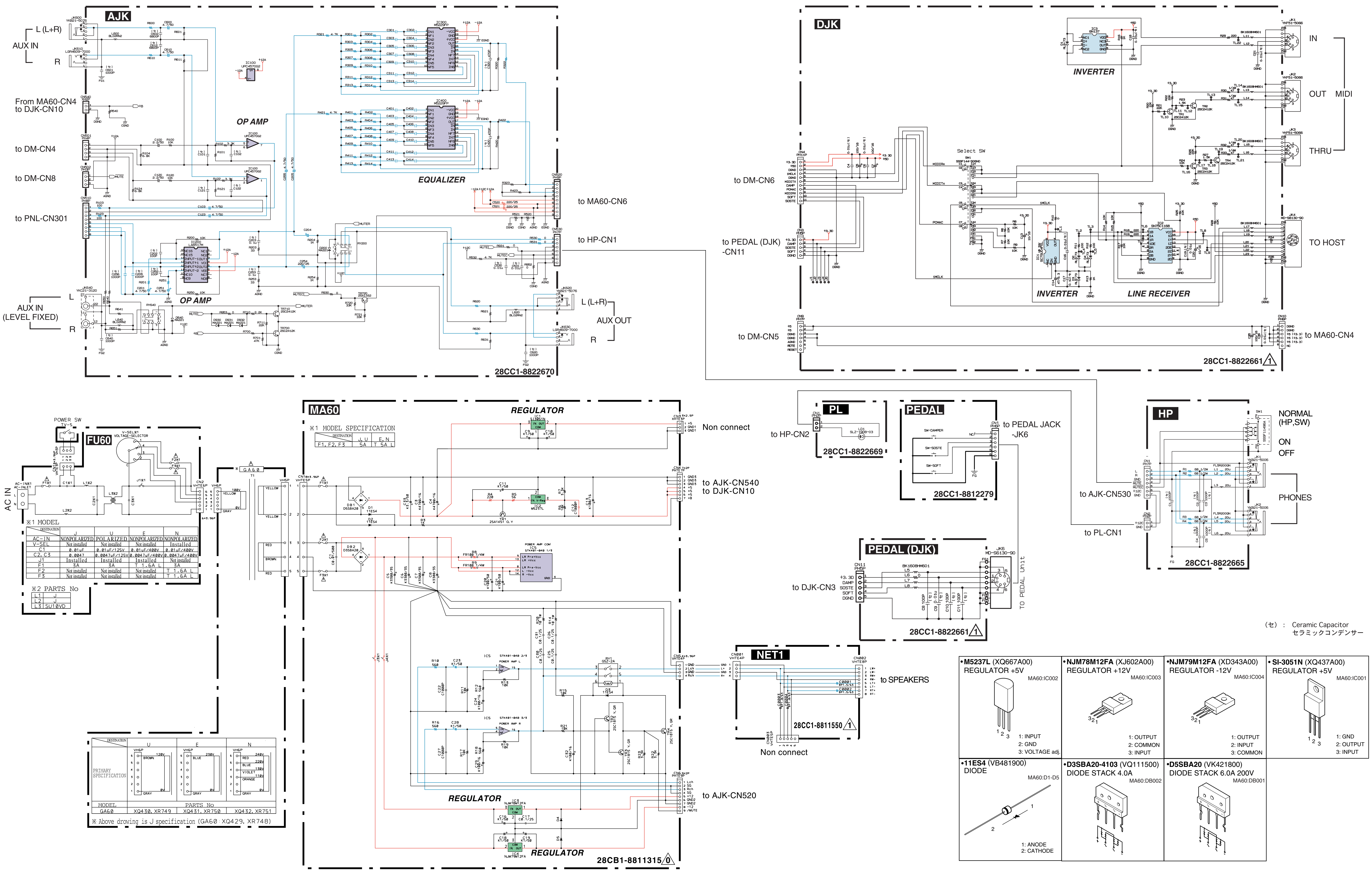

Note: See parts list for details of citcuit baord component parts.

■ WARNING
Components having special characteristics are maked ⚠ and must be replaced with parts having specification equal to those originally installed.

<P.3>

■ CLP-130 CIRCUIT DIAGRAM 3/3 (GH-D_SW H, GH-D_SW L, PNL, PNR)

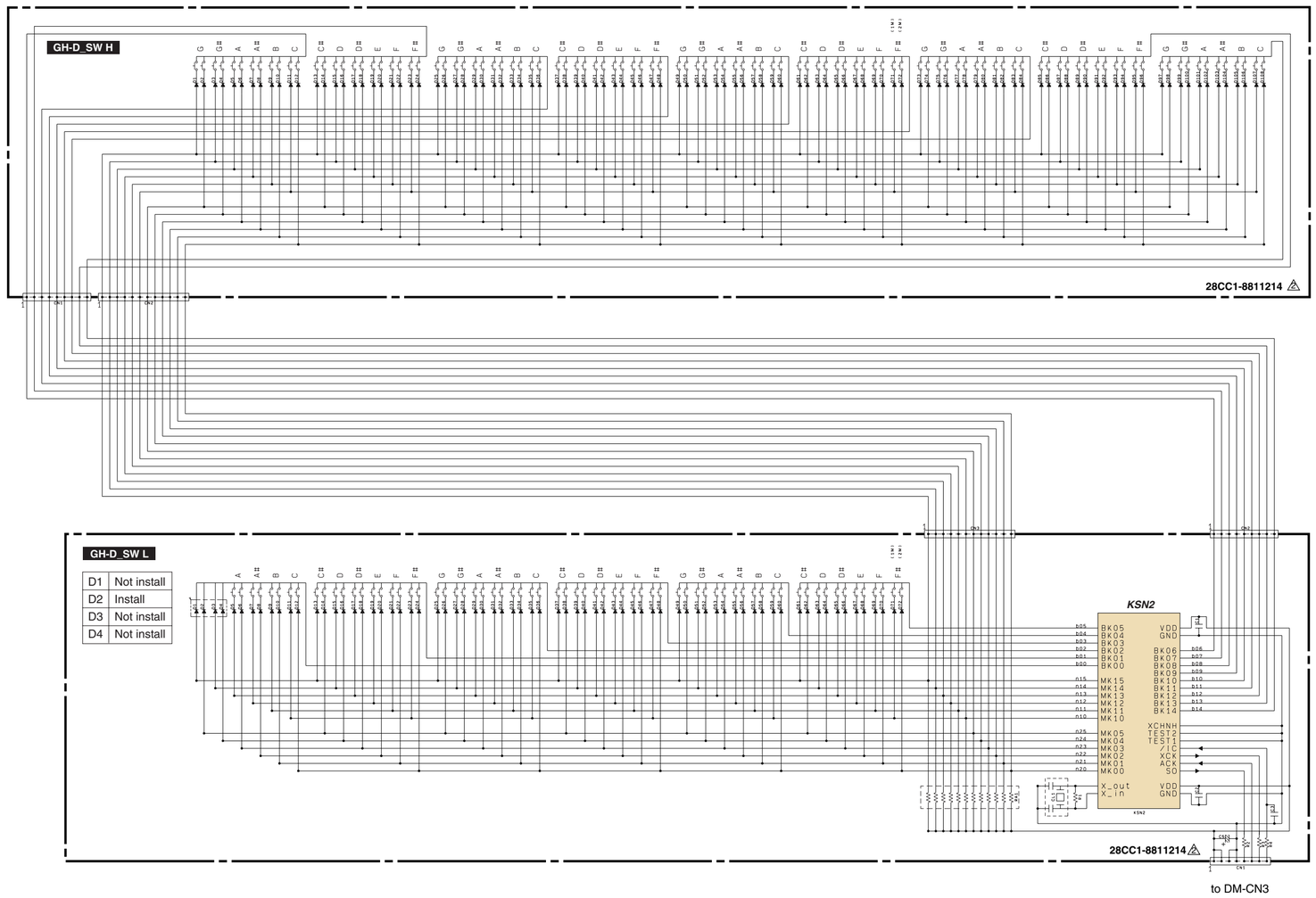

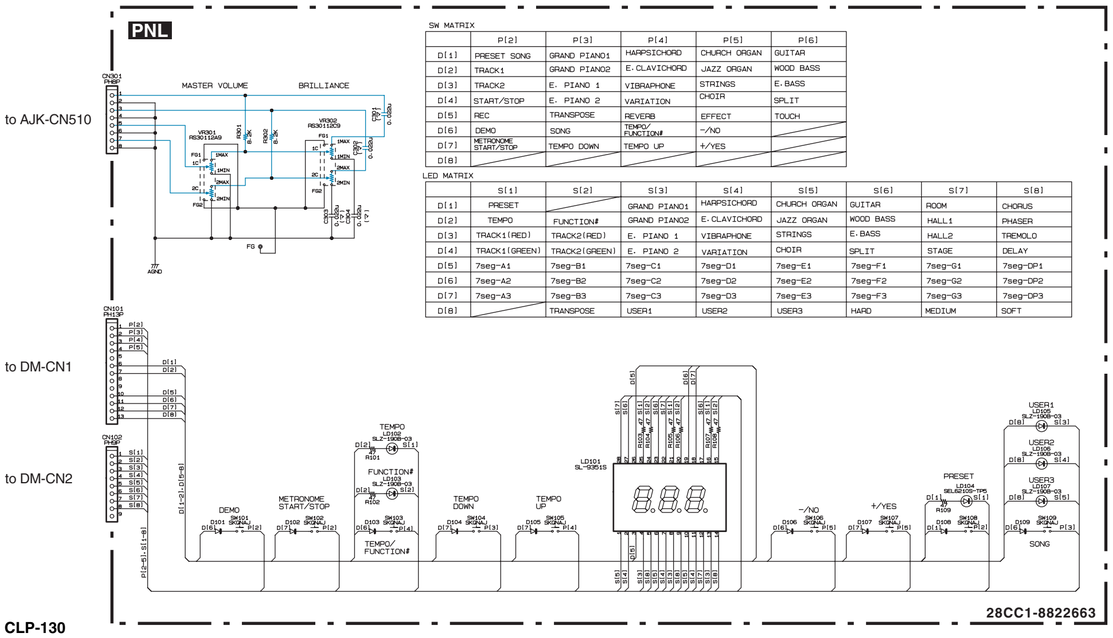

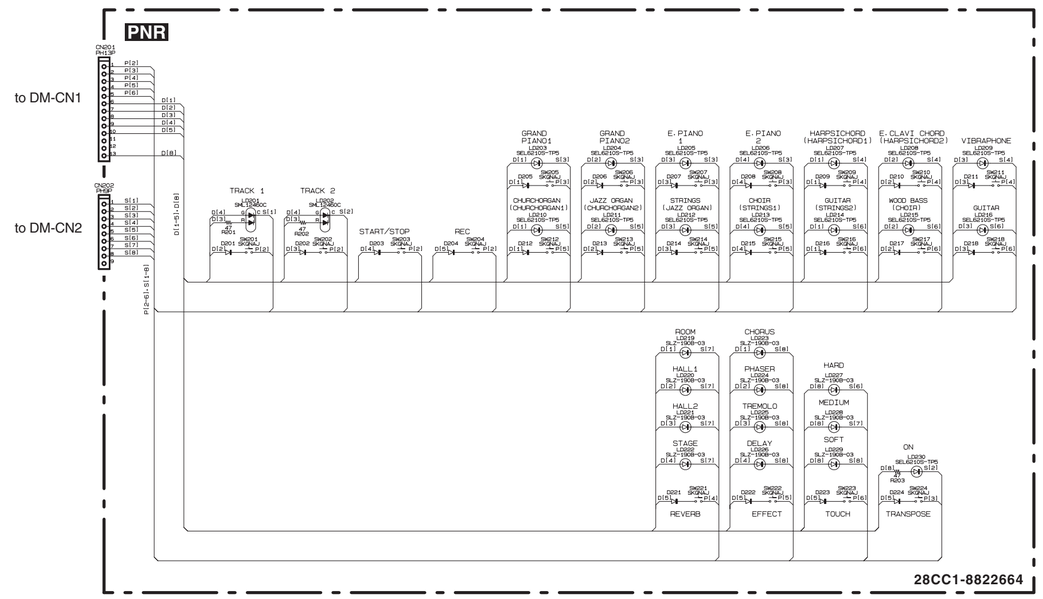

Note: See parts list for details of circuit baord component parts.

Clavinova®

CLP-130

PARTS LIST

■ CONTENTS

OVERALL ASSEMBLY 2
MAIN UNIT 4
SIDE BOARD ASSEMBLY 8
PEDAL BOX ASSEMBLY 9
PEDAL ASSEMBLY 10
TOP BOARD ASSEMBLY 11
MUSIC REST ASSEMBLY 12
SIDE COVER ASSEMBLY 13
END BLOCK ASSEMBLY 14
PANEL ASSEMBLY 15
KEY COVER ASSEMBLY 17
MA60 ASSEMBLY 18
FU60 ASSEMBLY 19
HP JACK ASSEMBLY 20
D-JACK ASSEMBLY 20
A-JACK ASSEMBLY 21
KEYBOARD ASSEMBLY 22
BENCH (BC-15) 24
BENCH 25
ELECTRICAL PARTS 26

Note) DESTINATION ABBREVIATIONS

A:	Australian model	M:	South African model
B:	British model	O:	Chinese model
C:	Canadian model	Q:	South-east Asia model
D:	German model	T:	Taiwan model
E:	European model	U:	U.S.A. model
F:	French model	V:	General export model (110V)
H:	North European model	W:	General export model (220V)
I:	Indonesian model	N,X:	General export model
J:	Japanese model	Y:	Export model
K:	Korean model		

■ WARNING

Components having special characteristics are marked ⚠ and must be replaced with parts having specifications equal to those originally installed.

■ The numbers in “QTY” shows quantities for each unit.
■ The parts with “--” in “Part No.” are not available as spare parts.
■ The second letter of the shaded ( ) part number is I, not one.
■ The second letter of the shaded ( ) part number is O, not zero.

■ OVERALL ASSEMBLY

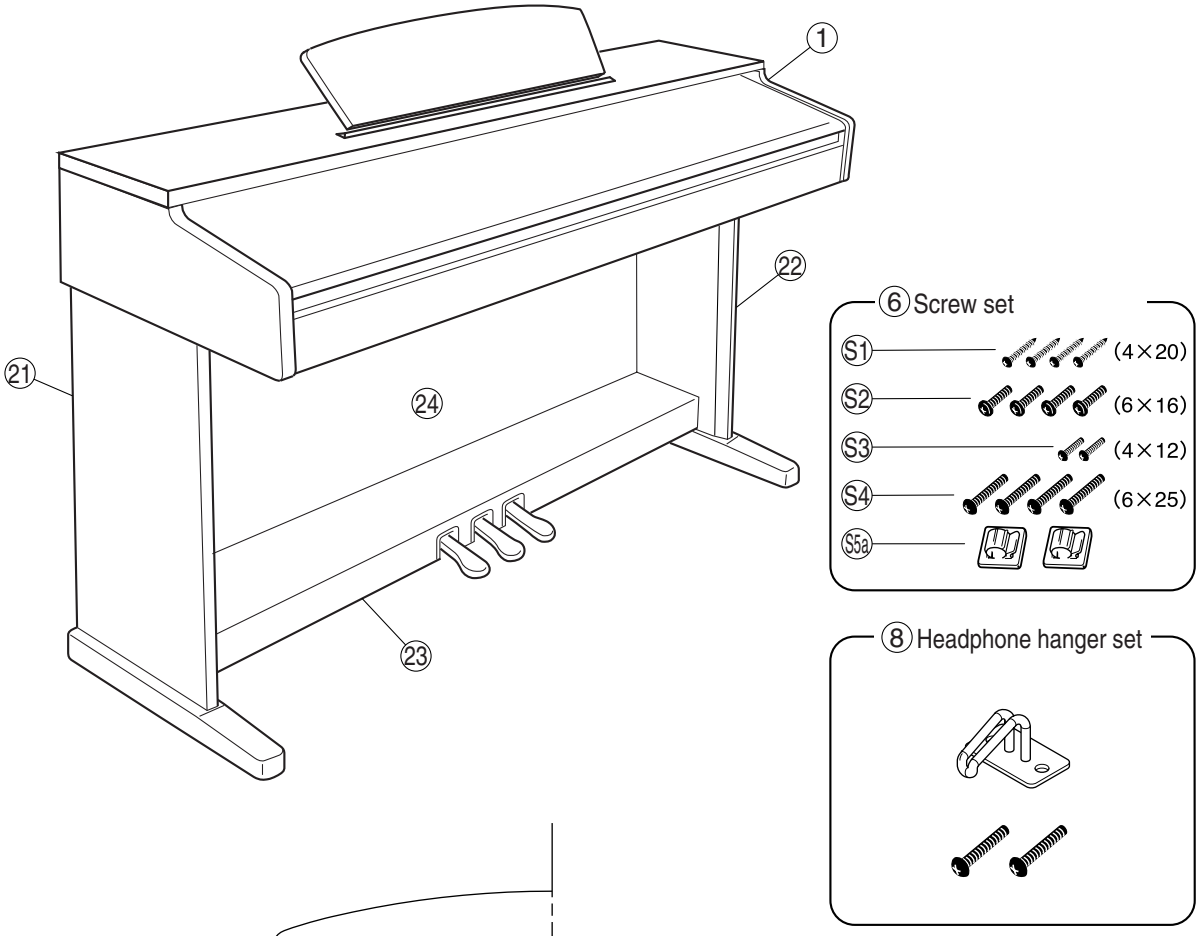

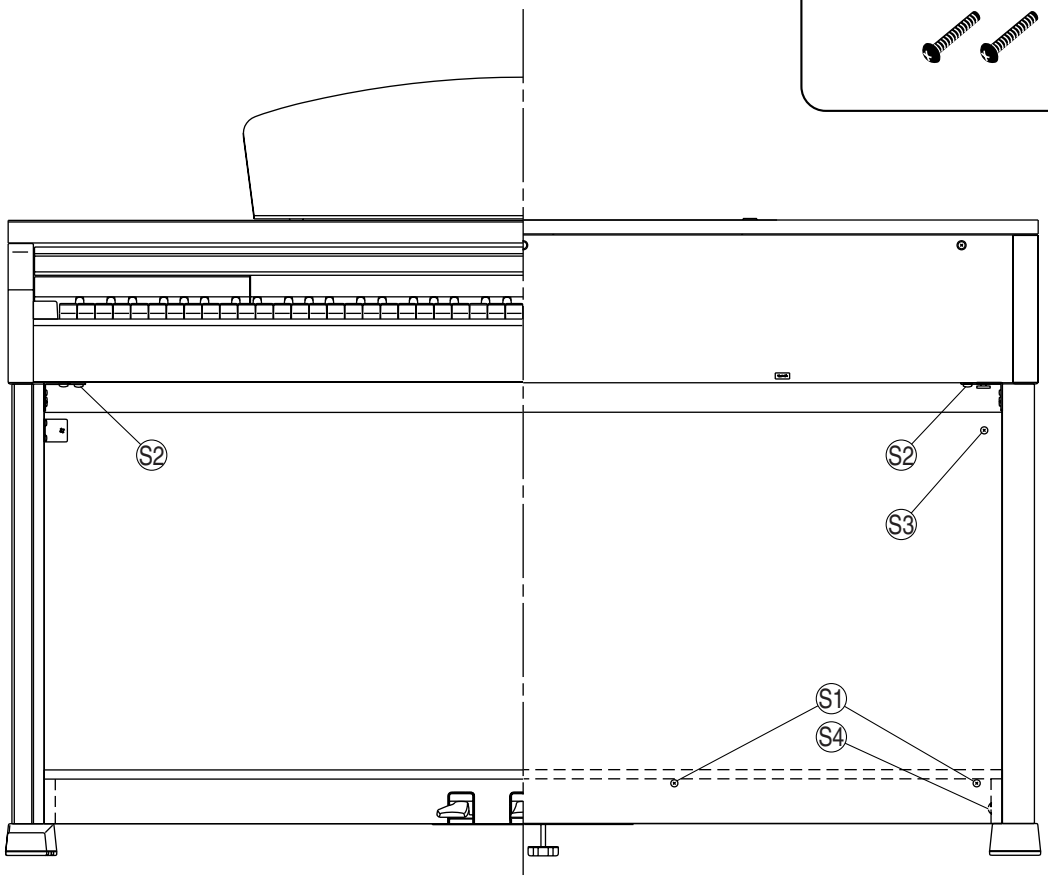

• **Front view** • **Rear view**

	REF NO.	PART NO.	DESCRIPTION			REMARKS		QTY	RANK
			OVERALL ASSEMBLY			CLP-130			
		--	Overall Assembly			CLP-130	(V824970)		
	1	--	Main Unit	J		J	(V824980)		
	1	--	Main Unit	U		U	(V824990)		
	1	--	Main Unit	E		E,B,K	(V825000)		
	1	--	Main Unit	K		K	(V938640)		
	1	--	Main Unit	N		N	(V825010)		
	6	**V5283500**	Screw set						03
*	8	**V8740600**	Headphone Hanger Set						
	13	**VK726100**	Connector	CCT5902		N			03
*	21	**V8217800**	Side Board Assembly-L	LEFT					
*	22	**V8217900**	Side Board Assembly-R	RIGHT					
	23	--	Pedal Box Assembly				(V821800)		
	24	**V9503300**	Back Board Set						14
			ACCESSORIES						
⚠		**V2916900**	AC Cord Set	J 2P 7A 2.5m		J			05
⚠		**V2917000**	AC Cord Set	UC 2P 7A 2.44m		U			06
⚠		**V2917100**	AC Cord Set	E 2P 2.5m 2.5A		E,N			05
⚠		**VT015700**	AC Cord Set	J 2P 2.5m 7A		J			05
⚠		**VT015800**	AC Cord Set	U 2P 2.44m 7A		U			06
⚠		**VT015900**	AC Cord Set	E 2P 2.5m		E,N			05
⚠		**VT016000**	AC Cord Set	B 2P 2.5m		B			08
⚠		**V8911300**	AC Cord Set	K 2P 2.5m		K			
		--	Bench	BC-100DR		U,N,K	(V553140)		
		--	Bench	CL BC-15 J		J	(VU42180)		
		V5771000	Headphone	059711		J			07
		V5283500	Screw Set						03
	S1	**03747290**	Truss Head Tapping Screw-1	4.0X20 MFZN2BL				4	01
	S2	**EG360020**	Bind Head Screw	6.0X16 MFZN2BL				4	01
	S3	**VP367300**	Truss Head Screw	4.0X12 MFZN2BL				2	01
	S4	**VQ448400**	Truss Head Screw	6.0X25 MFZN2BL				4	01
	S5	**VR410300**	Cord Clamp Set						03
	S5a	**VP592100**	Cord Clamper	DKN-5B (VHB)				2	03
			JIGS						
		TX900761	Hex Wrench						09
		TX000670	Rod						99

*: New Parts

RANK: Japan only

■ MAIN UNIT

• **Rear view**

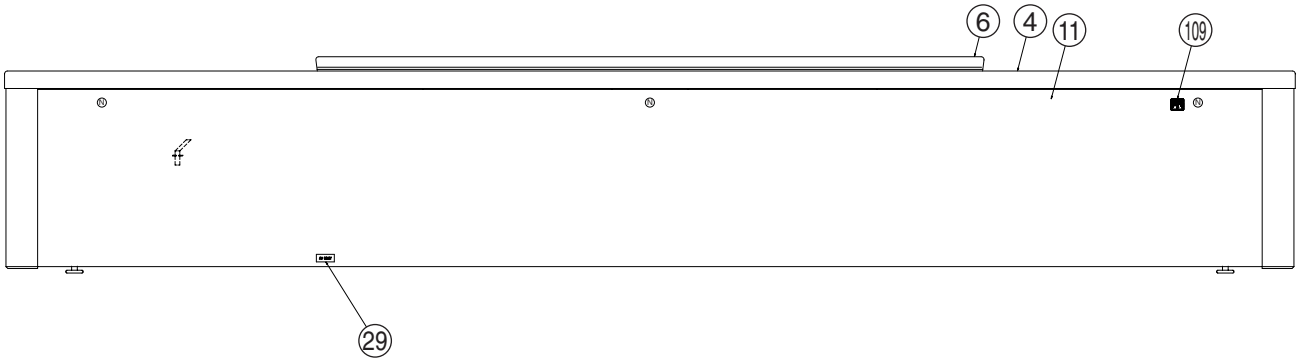

• **Top view 1**

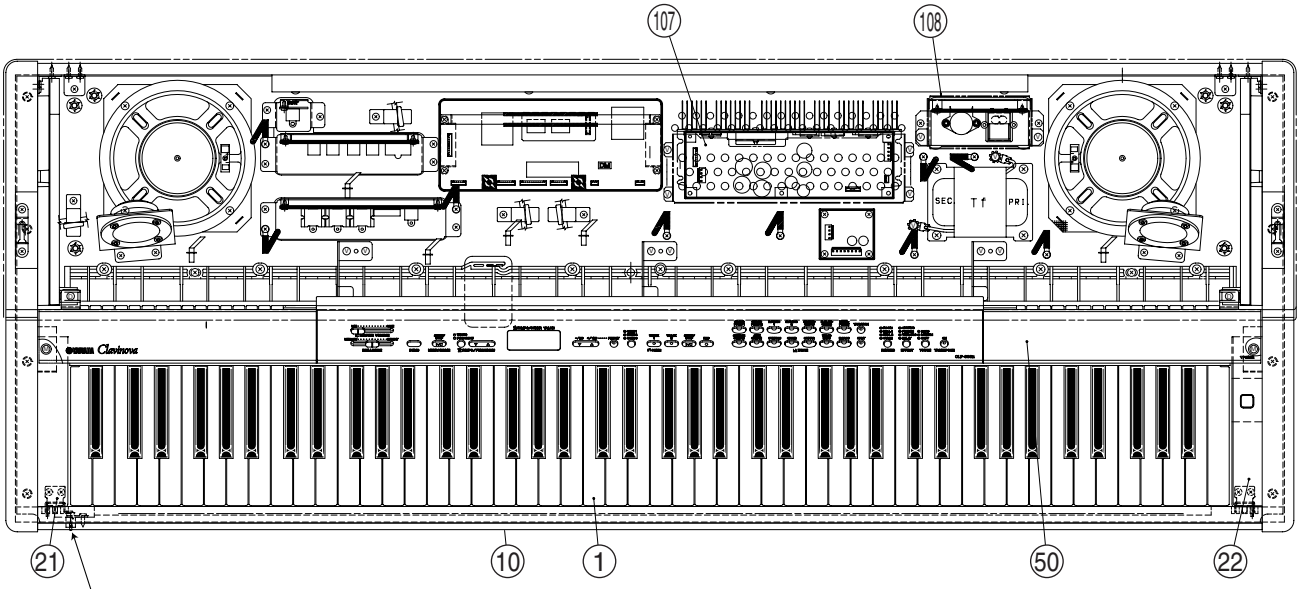

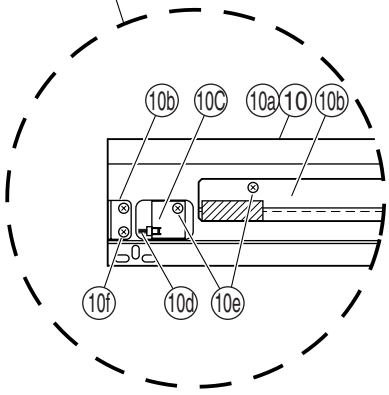

• **Side view**

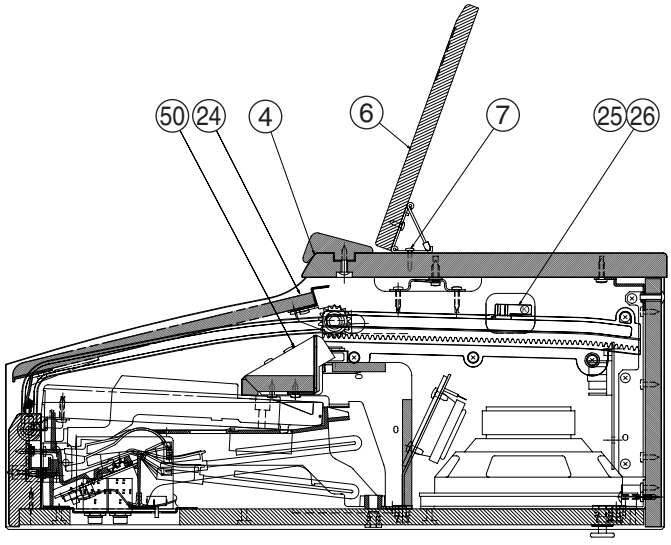

• **Bottom view**

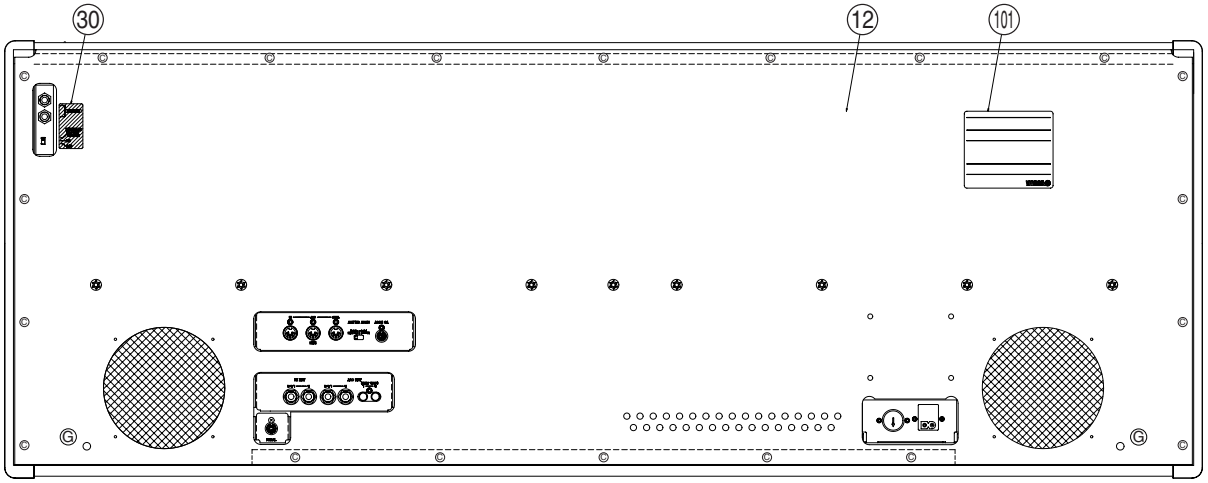

• **Top view 2**

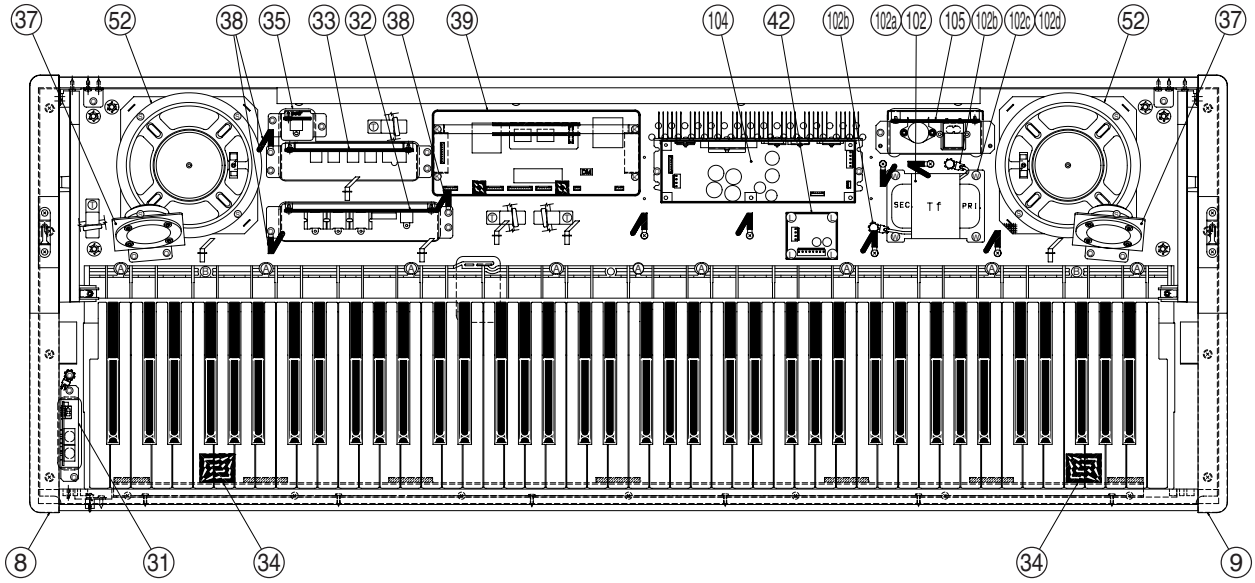

Screw Set List

Screw	Ref.No.	Parts No.	Qty
Ⓐ	2	Pan Head Screw (VV040700)	9
Ⓑ	3	Bind Head Tspping Screw-1 (EP040230)	2
Ⓒ	15	Truss Head Tapping Screw-1 (EN630190)	20
Ⓓ	20	Bind Head Tspping Screw-B (EP640130)	2
Ⓖ	17	Guide Screw (VN887900)	2
Ⓗ	18	Bind Head Tspping Screw-1 (EP030190)	10
Ⓚ	27	Bind Head Tapping Screw-B (EP600250)	6
Ⓛ	44	Bind Head Tspping Screw-1 (EP030470)	4
Ⓜ	23	Truss Head Tapping Screw-1 (VA076400)	2
Ⓝ	5	Truss Head Screw (V6207400)	3
Ⓠ	51	Bind Head Tapping Screw-1 (EP030240)	29
Ⓢ	53	Truss Head Tapping Screw-1 (20338800)	8
Ⓣ	72	Truss Head Tapping Screw-1(EN630230)	4
Ⓥ	106	Bind Head Tapping Screw-1 (EP030240)	8
Ⓦ	103	Bind Head Screw (EG340210) J, E, N	4
Ⓦ	103	Truss Head Screw (VL445800) U	4

	REF NO.	PART NO.	DESCRIPTION		REMARKS	QTY	RANK
			MAIN UNIT		CPL-130		
		--	Main Unit	J	J (V824980)		
		--	Main Unit	U	U (V824990)		
		--	Main Unit	E	E,B,K (V825000)		
		--	Main Unit	N	N (V825010)		
		--	Main Unit	K	K (V938640)		
	100	--	Main Unit Sub Assembly		(V825090)		
	101	--	Name Plate	J (YMMA)	J (V825100)		
	101	--	Name Plate	U	U (V825110)		
	101	--	Name Plate	N	N (V825130)		
	101	--	Name Plate	E	E,B (V873400)		
	101	--	Name Plate	K	K (V938300)		
	102	VU326500	Power Transformer Assembly	UL CSA	U		16
	102a	XQ430C00	Power Transformer	29WP243 UL/CSA	U		11
	102b	--	GND Wire		U (VG29670)	2	
	102c	EP600130	Bind Head Tapping Screw-B	3.0X6 MFZN2Y	U	2	01
	102d	VA121600	Bushing		U	4	01
	102e	VA121400	Spacer		U	4	02
	102f	VK431100	FDD Spacer		U	4	01
⚠	102	XQ429A00	Power Transformer	GA-60J	J		12
⚠	102	XQ429B00	Power Transformer	GA-60J	J		12
⚠	102	XQ430C00	Power Transformer	29WP243 UL/CSA	U		11
⚠	102	XQ431B00	Power Transformer	GA-60 E IEC65	E,B,K		12
⚠	102	XQ432A00	Power Transformer	GA-60 N	N		14
⚠	102	XQ432B00	Power Transformer	GA-60 N	N		14
	103	EG340210	Bind Head Screw	4.0X14 MFZN2Y	J,E,B,N,K	4	01
	103	VL445800	Truss Head Screw	4.0X20 MFZN2Y	U	4	01
	104	VT144300	MA60 Assembly	J,U	J,U		
	104	VT144400	MA60 Assembly	E,GBR,N	E,B,N,K		
	105	VT152000	FU60 Assembly	J	J		10
	105	VT152100	FU60 Assembly	U	U		10
	105	VT152200	FU60 Assembly	E,GBR	E,B,K		10
	105	VT153300	FU60 Assembly	N	N		12
	106	EP030240	Bind Head Tapping Screw-1	3.5X12 MFZN2Y	U	8	01
	107	VT475700	Cover, MA	SECC-T1 T0.8	U		07
	108	VU348800	Cover, FU		U		06
	109	VB951400	Graphic Mark	MKX-5 UL	U		03
	109	--	Graphic Mark	YMMA	U (V846210)		
		--	Main Unit Sub Assembly		(V825090)		
	1	VZ705400	Keyboard Assembly	A88 K6			63
	2	VV040700	Pan Head Screw	5.0X25 MFZN2Y PW		9	01
	3	EP040230	Bind Head Tapping Screw-1	4.0X14 MFZN2Y		2	01
*	4	V8251400	Top Board Assembly				
	5	V6207400	Truss Head Screw	4.0X16 MFZN2BL		3	01
*	6	V8217700	Music Rest Assembly				
	7	EP030310	Bind Head Tapping Screw-1	3.0X16 MFZN2BL		4	01
*	8	V8218900	Side Cover Assembly	LEFT			
*	9	V8219000	Side Cover Assembly	RIGHT			
	10	--	Front Rail Assembly		(V821910)		
	10	--	Front Rail Assembly		DR WRAPPING (V900090)		
*	10a	V8243700	Front Rail				
	10b	--	Angle, K	1.6 L	(V526350)	2	
	10b	--	Holder Assembly, Keyboard		(V760310)		
	10c	VN637600	Circuit Board	PL (YCJ)			03
	10c	VU659100	Circuit Board	PL (YMMA)			03
*	10d	VK099600	Connector Assembly	2P-150 KRD-KRD			
	10e	EP030340	Bind Head Tapping Screw-1	3.5X12 MFZN2BL		7	01
	10f	EP030260	Bind Head Tapping Screw-1	3.5X16 MFZN2BL		4	01
*	11	V8219200	Back Top Panel Assembly				
*	12	V8251900	Keybed Assembly				
	12a	VA789400	Nut	B 4.0X11.5 MFZ2BL		4	01
	12b	VA127400	Nut	B 5.0X12 MFZ2BL		9	01
	12c	ET200050	Nut	B 6.0X12.5 MFZN2Y		6	02
	12d	V9001100	Nut	TYPE I M 4 X L 12.5		2	01
	15	VU952600	Truss Head Tapping Screw-1	3.5X30 MFZN2BL		20	01
	17	VN887900	Guide Screw	+ 6X14		2	03
	18	EP030190	Bind Head Tapping Screw-1	3.5X16 MFZN2Y		10	01
	20	EP640130	Bind Head Tapping Screw-B	4.0X10 MFZN2Y		2	01
	21	--	End Block Assembly	LEFT	(V925890)		

*: New Parts

RANK: Japan only

	REF NO.	PART NO.	DESCRIPTION			REMARKS	QTY	RANK
	22	--	End Block Assembly	RIGHT		(V850380)		
	23	VA076400	Truss Head Tapping Screw-1	3.5X30 MFZN2Y			2	01
*	24	V8448100	Key Cover Assembly	(YMMA)				
	25	VS312100	Rack Cover	LEFT				03
	26	VS312200	Rack Cover	RIGHT				03
	27	EP600250	Bind Head Tapping Screw-B	3.0X8 MFZN2Y			6	01
	29	VT501000	Label					03
	30	--	Label, HP-PHONES			(V861670)		
	31	--	HP JACK Assembly			(V851220)		
	32	--	D-JACK Assembly			(V851080)		
	33	--	A-JACK Assembly			(V851090)		
	34	--	Electritic Adhesive Tape	NO.7701 40X20M		(V604530)		
	35	--	PK Connector			(V862880)		
	35a	V4980600	Plate					05
*	35b	V8496300	Circuit Board	PEDAL (DJK)				
	35c	EP600190	Bind Head Tapping Screw-B	3.0X8 MFZN2BL			2	01
	37	--	SP Assembly			(V575030)	2	
	37a	--	Angle Bracket, SP			(V574870)		
	37b	XL455A00	Speaker	5.0cm 16ohm 60W				07
	37c	EP600240	Bind Head Tapping Screw-B	4.0X10 MFZN2BL			4	01
	38	CB817510	Cord Binder	S-14B			3	03
*	39	V8495600	Circuit Board	DM				
*	42	V7708200	Circuit Board	NET1				
	43	CB040950	Spacer				4	03
	44	EP030470	Bind Head Tapping Screw-1	3.5X20 MFZN2Y			4	01
	47	VP834600	Adhesive Tape	12X50			3	02
*	50	V8252200	Panel Assembly					
	51	EP030240	Bind Head Tapping Screw-1	3.5X12 MFZN2Y			29	01
	52	XV746A00	Speaker	16.0cm 6ohm 40W			2	09
	53	20338800	Truss Head Tapping Screw-1	4X20 MFZN2Y			8	01
	60	VK110800	Connector Assembly	4P-450 KRD-KRD				05
	61	VK110700	Connector Assembly	3P-450 KRD-KRD				04
	62	VK104000	Connector Assembly	7P-250 KRD-KRD				
	63	VK103800	Connector Assembly	5P-250 KRD-KRD				
	64	VK113900	Connector Assembly	9P-550 KRD-KRD				
	65	V8527600	Connector Assembly	MK-LF				
	66	V8527700	Connector Assembly	DJK-LF				
	67	V8527800	Connector Assembly	HP-LF				
	68	V8528300	Connector Assembly	PU-NW				
*	69	V9221900	Connector Assembly	SP				
	70	V8529100	Connector Assembly	VDD				
	72	EN630230	Truss Head Tapping Screw-1	3.5X14 MFZN2Y			4	01

*: New Parts

RANK: Japan only

■ SIDE BOARD ASSEMBLY (L, R)

***This figure shows a side cover assembly (L).**

• Front view **• Side view**

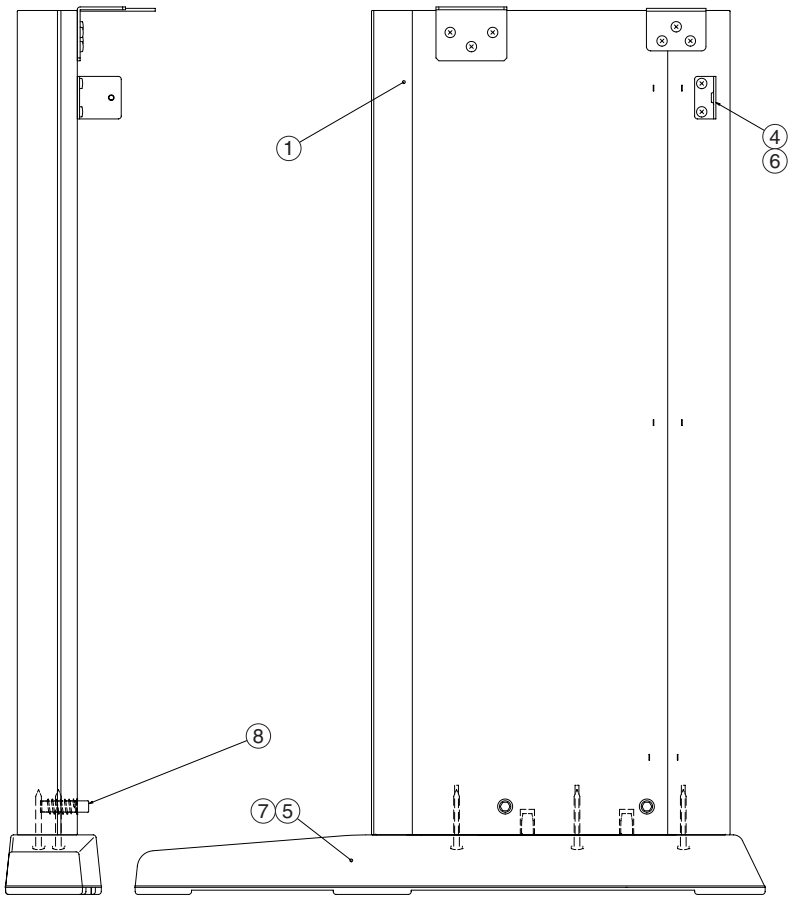

REF NO.	PART NO.	DESCRIPTION			REMARKS	QTY	RANK
		SIDE BOARD ASSEMBLY			CLP-130		
*	**V8217800**	Side Board Assembly-L	LEFT				
1	**--**	Side Board	LEFT		(V823630)		
2	**VS295500**	Holder, Stand	LEFT				05
3	**VZ885300**	Angle Bracket	2.0 L MFZN2				04
4	**VQ958300**	Holder, Back Board					05
5	**V4960400**	Stand Base	LEFT				06
6	**EP030580**	Bind Head Tapping Screw-1	3.5X20 MFZN2BL			8	01
7	**V5344700**	Bind Head Tapping Screw-1	4.0X40 MFZN2Y			3	01
8	**V5251600**	Nut	TYPE M M6XL33			2	01
*	**V8217900**	Side Board Assembly-R	RIGHT				
1	**--**	Side Board	RIGHT		(V823640)		
2	**VS295600**	Holder, Stand	RIGHT				05
3	**VZ885300**	Angle Bracket	2.0 L MFZN2				04
4	**VQ958300**	Holder, Back Board					05
5	**V5097500**	Stand Base	RIGHT				06
6	**EP030580**	Bind Head Tapping Screw-1	3.5X20 MFZN2BL			8	01
7	**V5344700**	Bind Head Tapping Screw-1	4.0X40 MFZN2Y			3	01
8	**V5251600**	Nut	TYPE M M6XL33			2	01

*: New Parts

RANK: Japan only

■ PEDAL BOX ASSEMBLY

• Front view

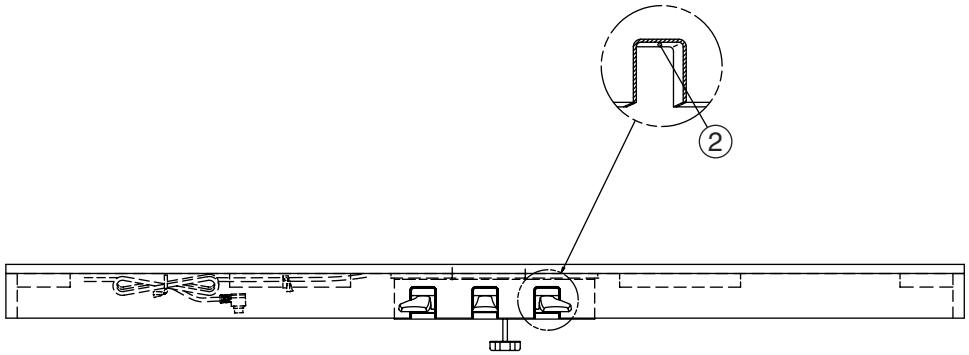

• Bottom view

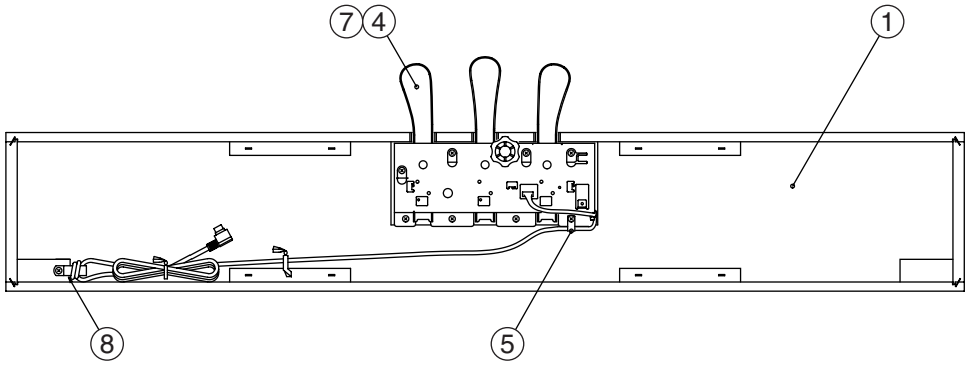

	REF NO.	PART NO.	DESCRIPTION			REMARKS	QTY	RANK
			PEDAL BOX ASSEMBLY			CLP-130		
		--	Pedal Box Assembly			(V821800)		
*	1	**V8559500**	Pedal Box					
	2	**VU464300**	Felt	115X12X2 RE			3	03
	4	**V0053700**	Pedal Assembly	3SW PK-LF				18
	5	**CB065520**	Nylon Clamp	NK-3N				01
	7	**EP040230**	Bind Head Tapping Screw-1	4.0X14 MFZN2Y			8	01
	8	**EN630260**	Truss Head Tapping Screw-1	3.5X20 MFZN2Y				01

*: New Parts

RANK: Japan only

■ PEDAL ASSEMBLY

• Top view

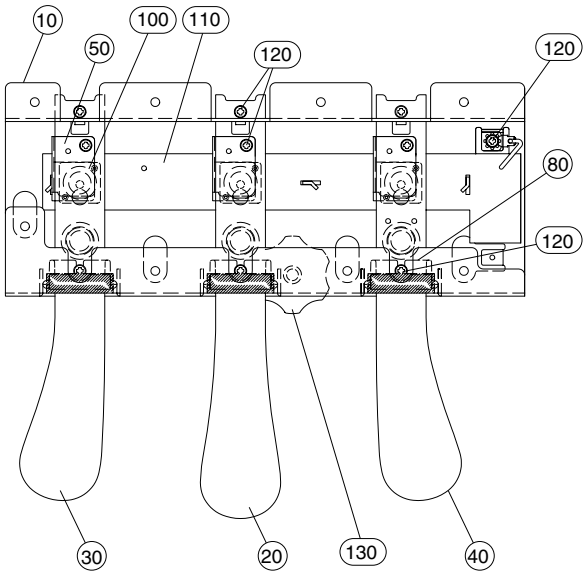

• Side view

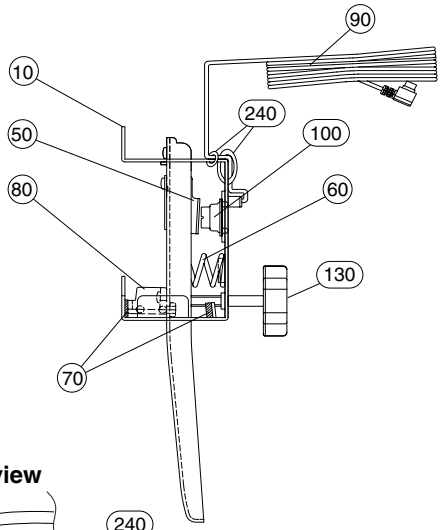

• Bottom view

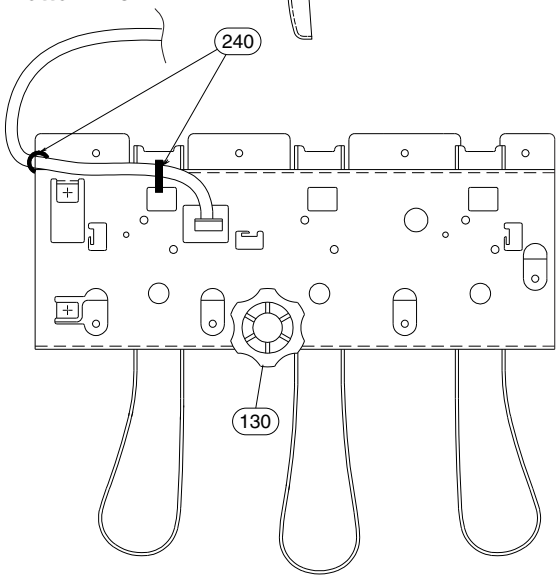

REF NO.	PART NO.	DESCRIPTION			REMARKS	QTY	RANK
		PEDAL ASSEMBLY	(I)		CLP-130		
	V0053700	Pedal Assembly	3SW PK-LF				**18**
10	**VU339700**	Pedal Frame					**09**
20	**VU362000**	Pedal Piece C	CENTER		SOSTENUTO		**08**
30	**VU362100**	Pedal Piece L	LEFT		SOFT		**08**
40	**VU362200**	Pedal Piece R	RIGHT		DAMPER		**08**
50	**VV433500**	Actuator	PEDAL			3	**03**
60	**VP348100**	Pedal Spring				3	**03**
70	**VU346500**	Felt	BL			6	**03**
80	**VU339800**	Shutter	PEDAL			3	**03**
90	**V0044700**	Connector Assembly	PK-LF				**08**
100	**VU456000**	Rubber Contact	1 PEDAL			3	**03**
110	**V2337300**	Circuit Board					**07**
120	**EP600190**	Bind Head Tapping Screw-B	3.0X8 MFZN2BL			10	**01**
130	**VU379700**	Adjuster					**02**
140	**TX920280**	Grease	G-31KA 50g				10
240	**CB069250**	Cord Holder	BK-1			2	**01**

*: New Parts

RANK: Japan only

■ TOP BOARD ASSEMBLY

• Top view

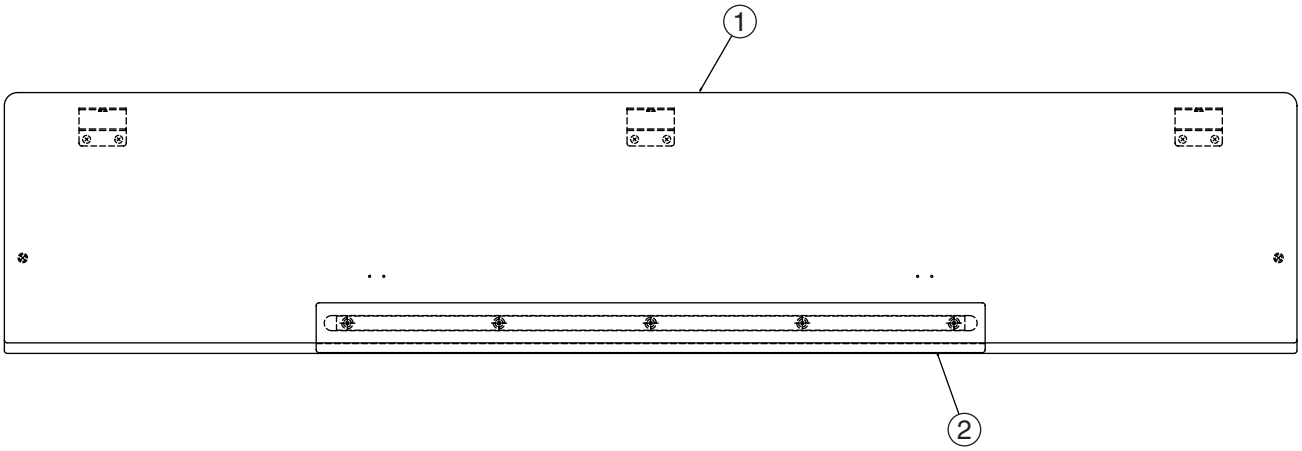

• Side view

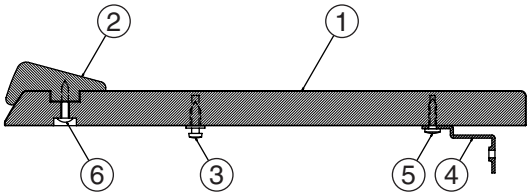

	REF NO.	PART NO.	DESCRIPTION			REMARKS	QTY	RANK
			TOP BOARD ASSEMBLY			CLP-130		
*		**V8251400**	Top Board Assembly					
	1	**--**	Top Board			(V825150)		
*	2	**V8252300**	Music Rest					
	3	**VV444100**	Shoulder Screw				2	03
	4	**VQ485800**	Holder, Top Board				3	05
	5	**EP040170**	Bind Head Tapping Screw-1	4.0X16 MFZN2Y			6	01
	6	**EN630260**	Truss Head Tapping Screw-1	3.5X20 MFZN2Y			5	01

*: New Parts

RANK: Japan only

■ MUSIC REST ASSEMBLY

• **Rear view**

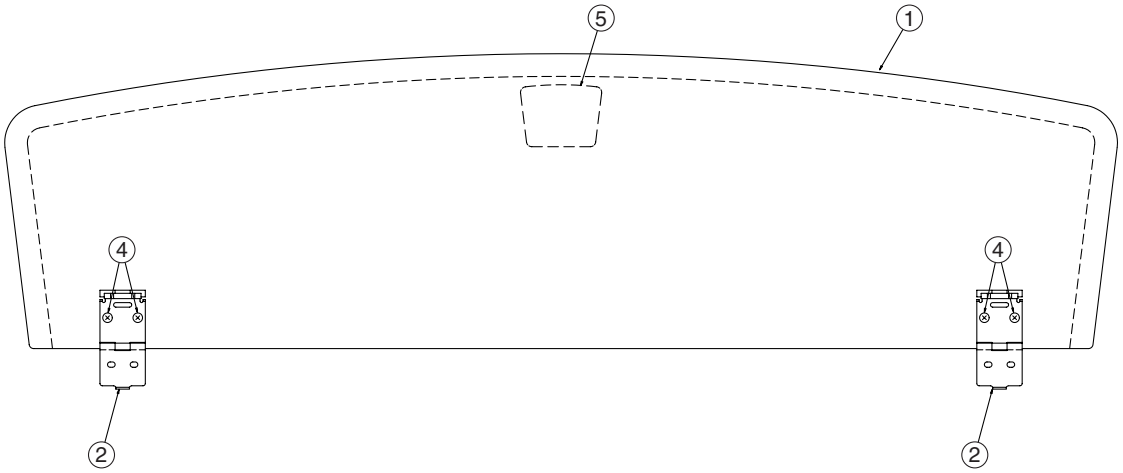

• **Sider view**

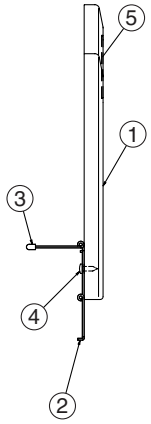

REF NO.	PART NO.	DESCRIPTION			REMARKS	QTY	RANK
		MUSIC REST ASSEMBLY			CLP-130		
*	**V8217700**	Music Rest Assembly					
1	**--**	Music Rest			(V822050)		
2	**V8437600**	Hinge	1STEP 1.6mm YMMA			2	
3	**VV965900**	Hinge Cap	T=1.6mm			2	03
4	**20404200**	Bind Head Tapping Screw-1	3.0X10 MFZN2BL			4	
5	**V5782300**	Badge	BRASS				05

*: New Parts

RANK: Japan only

■ SIDE COVER ASSEMBLY (L, R)

***This figure shows a side cover assembly (L).**

• Front view

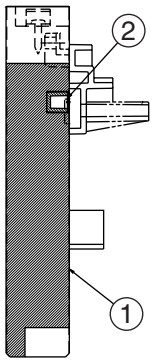

• Side view

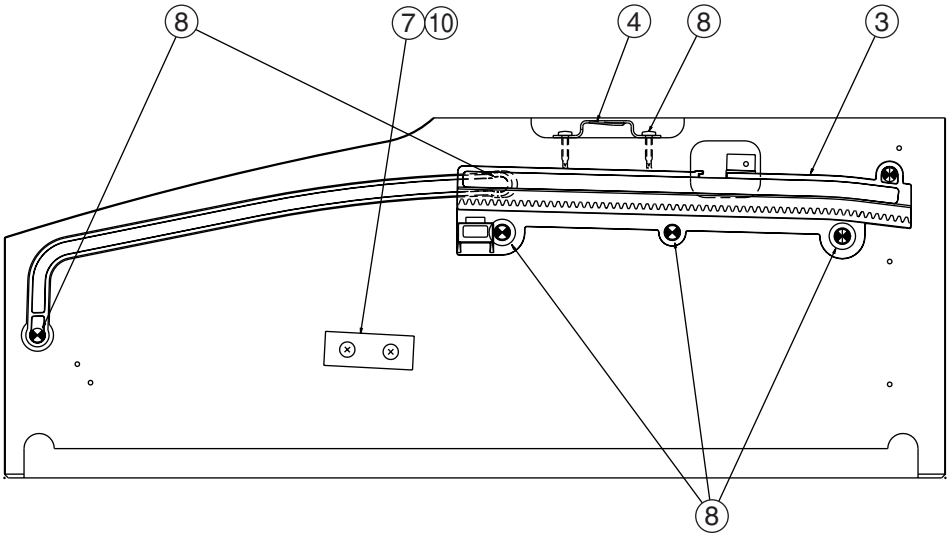

	REF NO.	PART NO.	DESCRIPTION			REMARKS	QTY	RANK
			SIDE COVER ASSEMBLY			CLP-130		
*		**V8218900**	Side Cover Assembly	LEFT				
	1	**--**	Side Cover	LEFT		(V823730)		
	2	**V4949100**	Guide Rail	LEFT				03
*	3	**V8553000**	Rack Assembly	LEFT				
	4	**VV444200**	Holder, Top Board	1.20 BL				03
	7	**--**	Crosspiece			(V861370)		
	8	**EP030190**	Bind Head Tapping Screw-1	3.5X16 MFZN2Y			8	01
	10	**VA076400**	Truss Head Tapping Screw-1	3.5X30 MFZN2Y			2	01
*		**V8219000**	Side Cover Assembly	RIGHT				
	1	**--**	Side Cover	RIGHT		(V823760)		
	2	**V4949300**	Guide Rail	RIGHT				03
*	3	**V8553100**	Rack Assembly	RIGHT				
	4	**VV444200**	Holder, Top Board	1.20 BL				03
	7	**--**	Crosspiece			(V861370)		
	8	**EP030190**	Bind Head Tapping Screw-1	3.5X16 MFZN2Y			8	01
	10	**VA076400**	Truss Head Tapping Screw-1	3.5X30 MFZN2Y			2	01

*: New Parts

RANK: Japan only

■ END BLOCK ASSEMBLY (L, R)

• Top view (L)

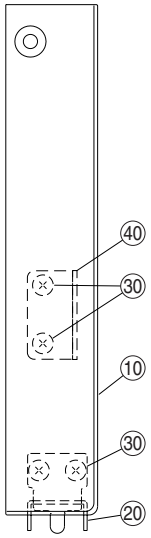

• Side view (R)

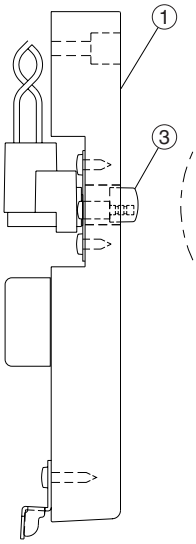

• Top view (R)

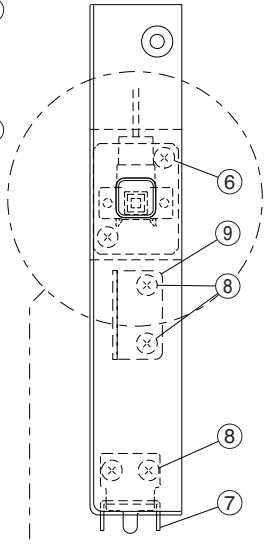

• Power switch assembly

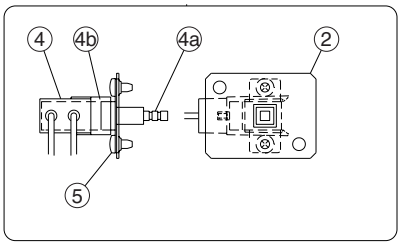

	REF NO.	PART NO.	DESCRIPTION			REMARKS	QTY	RANK
			END BLOCK ASSEMBLY			CLP-130		
		--	End Block Assembly	LEFT		(V925890)		
*	10	V9351000	End Block	LEFT,NO BORE				
	20	--	Angle, H	1.2 L		(V533550)		
	30	EP030190	Bind Head Tapping Screw-1	3.5X16 MFZN2Y			4	01
	40	--	Angle, K	1.6 L		(V526350)		
		--	End Block Assembly	RIGHT		(V850380)		
*	1	V9351500	End Block	RIGHT,NO BORE				
	2	--	Power Switch Angle	0.8		(V522000)		
	3	VF663400	Knob	BL		POWER		02
*	4	V8528200	Power Switch Assembly	PSW				
⚠	4a	VC843500	Push Switch	SDDLB1216A J.U.C.S		POWER		03
	4b	V5800800	Switch Cover	IV,BL				01
	5	EP600230	Bind Head Tapping Screw-B	3.0X6 MFZN2BL			2	01
	6	EP030320	Bind Head Tapping Screw-1	3.5X10 MFZN2BL			2	01
	7	--	Angle, H	1.2 L		(V533550)		
	8	EP030190	Bind Head Tapping Screw-1	3.5X16 MFZN2Y			4	01
	9	--	Angle, K	1.6 L		(V526350)		

*: New Parts

RANK: Japan only

■ PANEL ASSEMBLY

• Top view 1

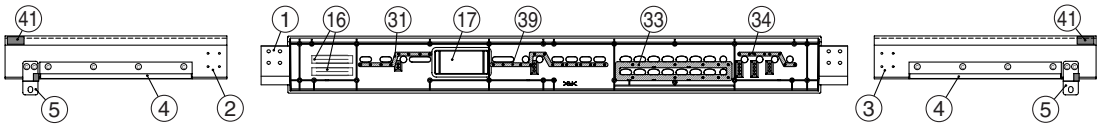

• Bottom view 1

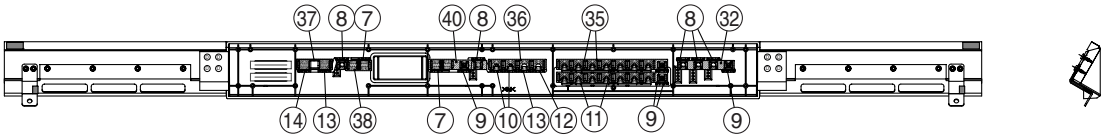

• Bottom view 2

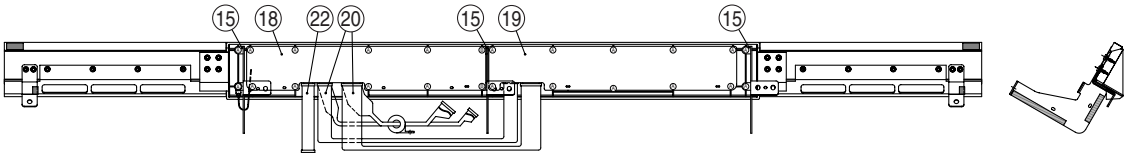

• Bottom view 3

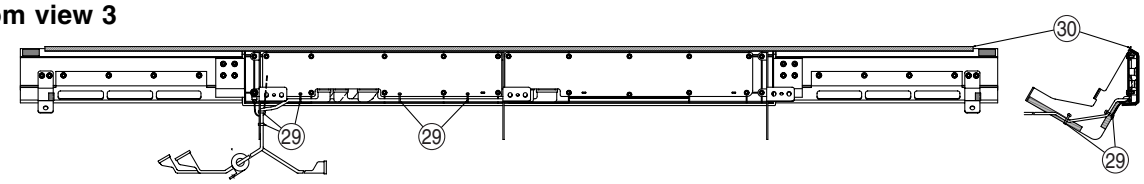

• Top view 2

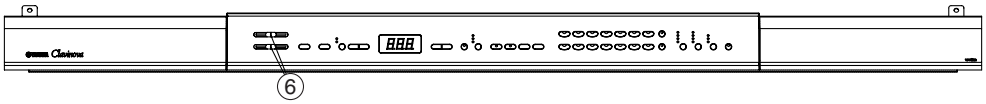

Screw Set List

Screw	Ref.No.	Parts No.	Qty
Ⓐ	24	Bind Head Tapping Screw-B (EP600250)	22
Ⓑ	27	Bind Head Tapping Screw-B (EP600140)	2
Ⓒ	25	Bind Head Tapping Screw-1 (EP030230)	12
Ⓓ	26	Bind Head Tapping Screw-1 (EP030340)	8

	REF NO.	PART NO.	DESCRIPTION			REMARKS	QTY	RANK
			PANEL ASSEMBLY			CLP-130		
		--	Panel Assembly			(V825220)		
*	1	V8284600	Control Panel					
*	2	V8285100	Panel	LEFT				
*	3	V8801000	Panel	RIGHT				
*	4	V8576600	SP Grille Assembly				2	
	5	--	Control Panel Holder A			(V907460)	2	
	6	V8085100	Slide Knob			MASTER VOLUME,BRILLIANCE	2	01
	7	V8064900	Button	A		DOWN,UP,-/NO,+/YES	2	
	8	V8066000	Button	D		TEMPO/FUNCTION#,USER1/2/3	5	
	9	V8066100	Button	D		REVERB,EFFECT,TOUCH PRESET,VARIATION,SPLIT TRANSPOSE	4	
	10	V8065500	Button	B		TRACK1,TRACK2	2	
	11	V8065800	Button	C		GRAND PIANO1,GRAND PIANO2	2	
						E.PIANO1,E.PIANO2, HARPSICHORD1,E.CLAVICHORD VIBRAPHONE,CHURCH ORGAN, JAZZ ORGAN,STRINGS,CHOIR, GUITAR,WOOD BASS,E.BASS		
*	12	V8669800	Button	B RE		REC		
*	13	V8669900	Button	B GR		METRONOME,SONG START/STOP	2	
*	14	V8670000	Button	B BR		DEMO		
	15	--	Panel Holder B Assembly			(V866200)	3	
	15a	--	Control Panel Holder B			(V857710)		

*: New Parts

RANK: Japan only

	REF NO.	PART NO.	DESCRIPTION			REMARKS	QTY	RANK
*	15b	VU850700	Felt	15X15X1				
	15c	--	Adhesive Tape	ECT W=15		(ZL35000)		
	16	--	Dust Proof Cloth	54X10X0.25		(V591130)	2	
	17	VU332300	Window, LED					03
	18	V7910200	Circuit Board	PNL				
	19	V7910300	Circuit Board	PNR				
*	20	V8528100	Connector Assembly	PN-LF				
*	22	V2226200	Connector Assembly	VOL L=400				
	24	EP600250	Bind Head Tapping Screw-B	3.0X8 MFZN2Y			22	01
	25	EP030230	Bind Head Tapping Screw-1	3.5X10 MFZN2Y			12	01
	26	EP030340	Bind Head Tapping Screw-1	3.5X12 MFZN2BL			8	01
	27	EP600140	Bind Head Tapping Screw-B	3.0X10 MFZN2BL			2	01
	29	CB069250	Cord Holder	BK-1			5	01
	30	VU638700	Felt	MK				05
	31	--	Dust Proof Cloth	A1		(V923670)		
	32	--	Dust Proof Cloth	B6		(V923760)		
	33	--	Dust Proof Cloth	A3		(V923690)		
	34	--	Dust Proof Cloth	A4		(V923700)		
	35	--	Dust Proof Cloth	B5		(V923750)	2	
	36	--	Dust Proof Cloth	B4		(V923740)		
	37	--	Dust Proof Cloth	B1		(V923710)		
	38	--	Dust Proof Cloth	B2		(V923720)		
	39	--	Dust Proof Cloth	A2		(V923680)		
	40	--	Dust Proof Cloth	B3		(V923730)		
	41	--	Dust Proof Cloth			(V257670)	2	

*: New Parts

RANK: Japan only

■ KEY COVER ASSEMBLY

• Bottom view

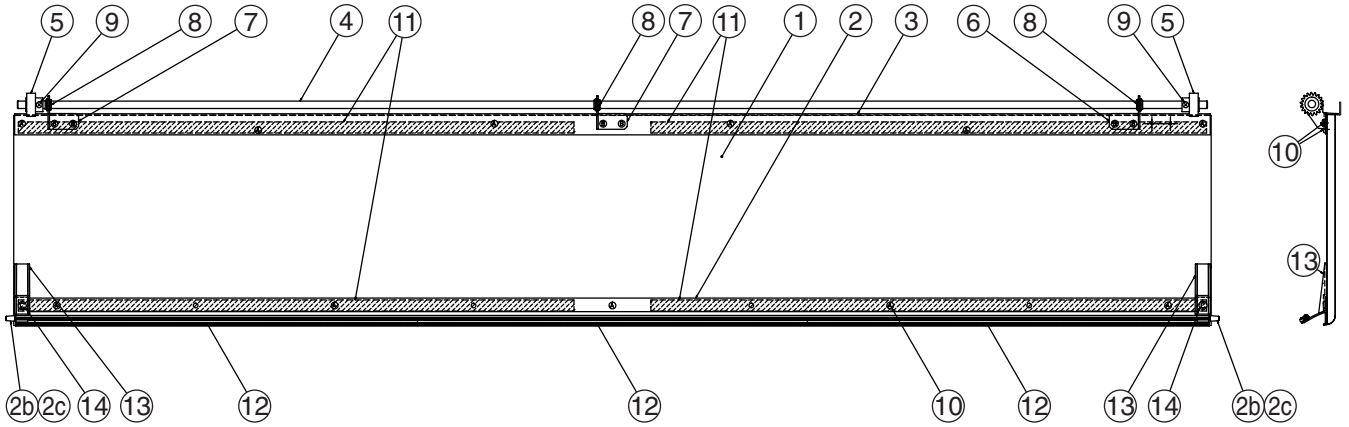

REF NO.	PART NO.	DESCRIPTION			REMARKS	QTY	RANK
		KEY COVER ASSEMBLY			CLP-130		
*	**V8448100**	Key Cover Assembly	(YMMA)				
1	**--**	Slide Cover			(V844670)		
2	**V4961900**	Sash Assembly	FRONT				10
2a	**--**	Sash	FRONT		(V496430)		
2b	**V4964400**	Guide Pin				2	
2c	**--**	Spacer			(V549580)	2	
3	**--**	Sash	REAR		(V664750)		
4	**--**	Rod			(V496240)		
5	**VT190400**	Gear				2	03
6	**VV285600**	Holder, Rod	LEFT				03
7	**VV285700**	Holder, Rod	RIGHT			2	03
8	**VS368500**	Bushing				3	03
9	**EG330060**	Bind Head Screw	3.0X10 MFZN2Y			2	01
10	**VN920900**	Bind Head Tapping Screw-1	3.5X8 MFZN2BL			17	01
11	**--**	Adhesive Tape	600X12		(VO02370)	4	
12	**VU457600**	Cushion	H-32 421X2.5XT4			3	03
12	**--**	Cushion	426X2.5XT4		(V946540)	3	
13	**V5902900**	Block				2	02
14	**EP030230**	Bind Head Tapping Screw-1	3.5X10 MFZN2Y			2	01

*: New Parts

RANK: Japan only

■ MA60 ASSEMBLY

• Top view

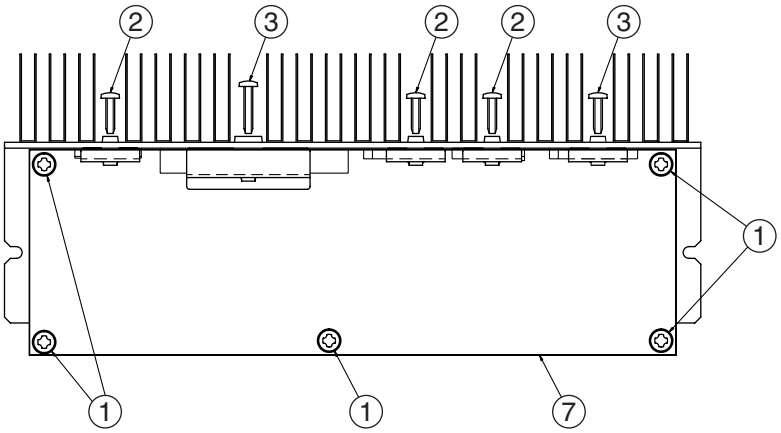

• Front view

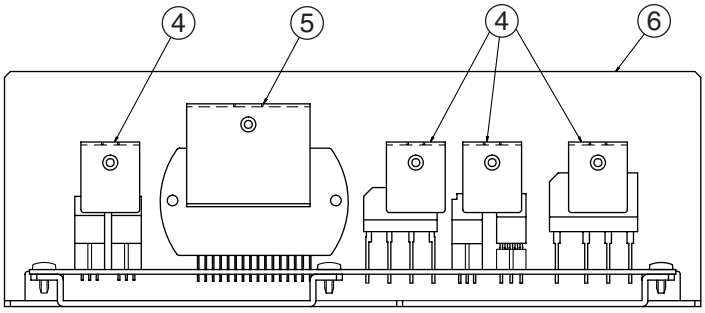

REF NO.	PART NO.	DESCRIPTION			REMARKS	QTY	RANK
		MA60 ASSEMBLY			CLP-130		
	VT144300	MA60 Assembly	J,U				
	VT144400	MA60 Assembly	E,GBR,N				
1	**EP640410**	Bind Head Tapping Screw-B	4.0X8 MFZN2Y			5	01
2	**EP600220**	Bind Head Tapping Screw-B	3.0X10 MFZN2Y			4	01
3	**EP600390**	Bind Head Tapping Screw-B	3.0X16 MFZN2Y				01
4	**VT461100**	Transistor Holder	A			4	03
5	**VT461200**	Transistor Holder	B				03
6	**VT444300**	Heat Sink					11
7	**VT143900**	Circuit Board	MA60		J,U		18
7	**VT144000**	Circuit Board	MA60		E,B,N,K		

*: New Parts

RANK: Japan only

■ FU60 ASSEMBLY

• Front view

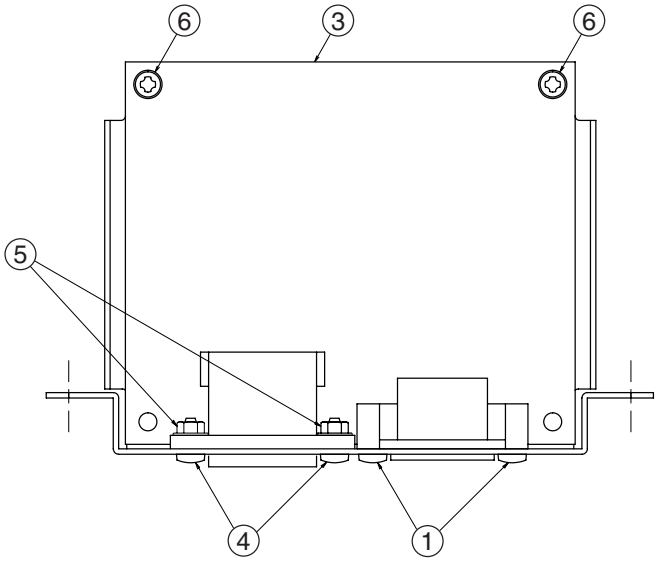

• Top view

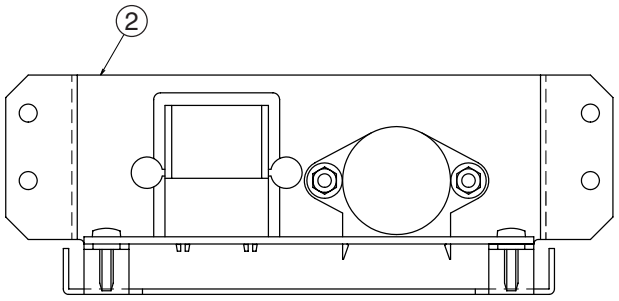

REF NO.	PART NO.	DESCRIPTION			REMARKS		QTY	RANK
		FU60 ASSEMBLY			CLP-130			
	VT152000	FU60 Assembly	J		J			10
	VT152100	FU60 Assembly	U		U			10
	VT152200	FU60 Assembly	E,GBR		E,B,K			10
	VT153300	FU60 Assembly	N		N			12
1	**EP600190**	Bind Head Tapping Screw-B	3.0X8 MFZN2BL				2	01
2	**VT172900**	Plate, AC Inlet			J,U,E,B,K			07
2	**VT488700**	Panel, AC Inlet			N			08
3	**--**	Circuit Board	FU60		J	(VT15140)		
3	**--**	Circuit Board	FU60		U	(VT15150)		
3	**--**	Circuit Board	FU60		E,B,K	(VT15160)		
3	**--**	Circuit Board	FU60		N	(VT15290)		
4	**EG330380**	Bind Head Screw	3.0X10 MFZN2BL		N		2	01
5	**VA211900**	Hexagonal Nut	3.0 MFZN2Y		N		2	01
6	**VE683000**	Bind Head Tapping Screw-B	3.0X12 MFZN2Y				2	01

*: New Parts

RANK: Japan only

■ HP JACK ASSEMBLY

• **Bottom view**

• **Side view**

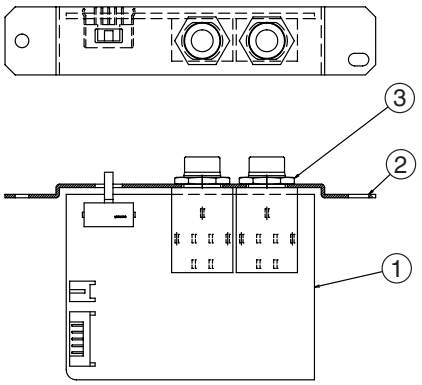

• **Top view**

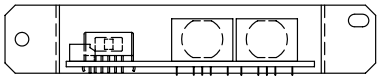

REF NO.	PART NO.	DESCRIPTION			REMARKS	QTY	RANK
		HP JACK ASSEMBLY			CLP-130		
	--	HP JACK Assembly			(V851220)		
* 1	**V8586500**	Circuit Board	HP				
2	--	Holder, Phone Jack			(V854930)		
3	**VB508600**	Hexagonal Nut	12.0 14X2 MFZN2BL			2	

*: New Parts

RANK: Japan only

■ D-JACK ASSEMBLY

• **Top view**

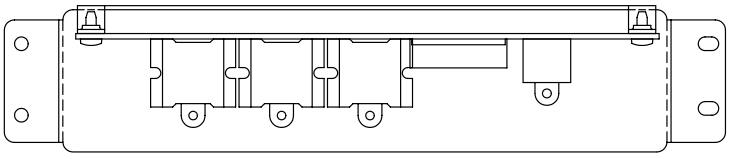

• **Side view**

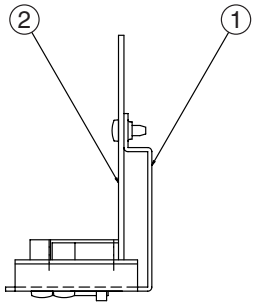

• **Front view**

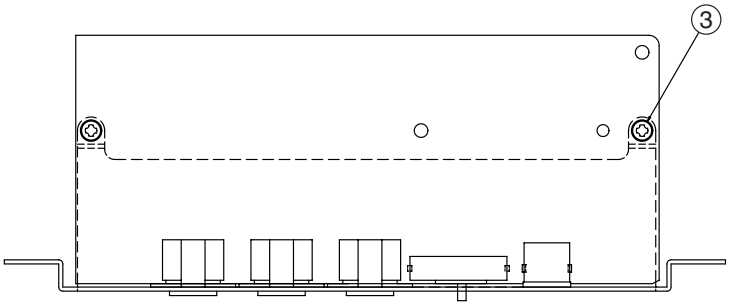

• **Bottom view**

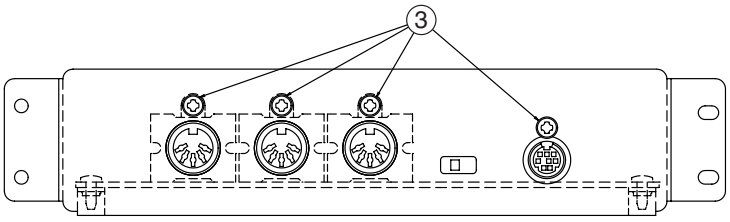

REF NO.	PART NO.	DESCRIPTION			REMARKS	QTY	RANK
		D-JACK ASSEMBLY			CLP-130		
	--	D-JACK Assembly			(V851080)		
1	--	Angle, D-JACK			(V851100)		
* 2	**V8496200**	Circuit Board	DJK				
3	**EP600190**	Bind Head Tapping Screw-B	3.0X8 MFZN2BL			6	01

*: New Parts

RANK: Japan only

■ A-JACK ASSEMBLY

• **Top view**

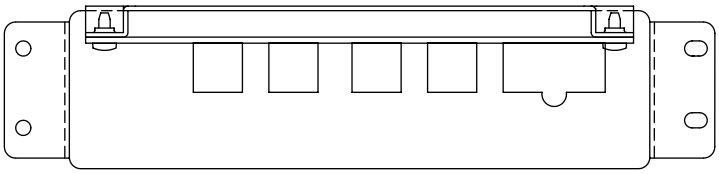

• **Front view**

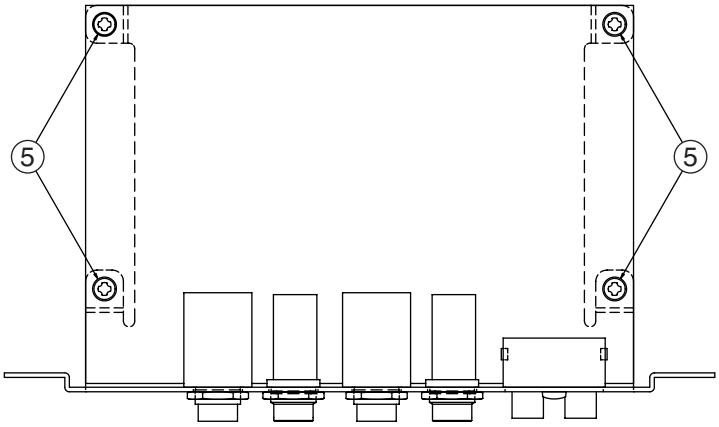

• **Side view**

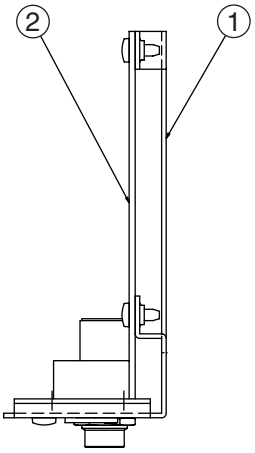

• **Bottom view**

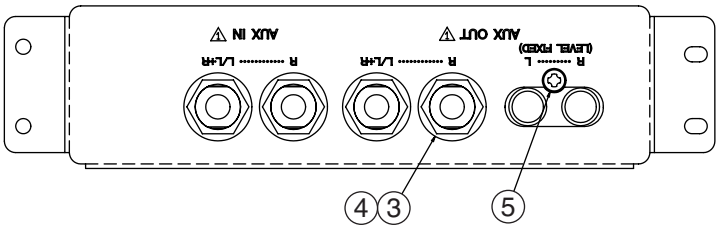

REF NO.	PART NO.	DESCRIPTION			REMARKS	QTY	RANK
		A-JACK ASSEMBLY			CLP-130		
	--	A-JACK Assembly			(V851090)		
1	--	Angle, A-JACK			(V851130)		
* 2	**V8499800**	Circuit Board	AJK				
3	**VJ869400**	Washer	BL			4	02
4	**VB508600**	Hexagonal Nut	12.0 14X2 MFZN2BL			4	01
5	**EP600190**	Bind Head Tapping Screw-B	3.0X8 MFZN2BL			5	01

*: New Parts

RANK: Japan only

■ KEYBOARD ASSEMBLY

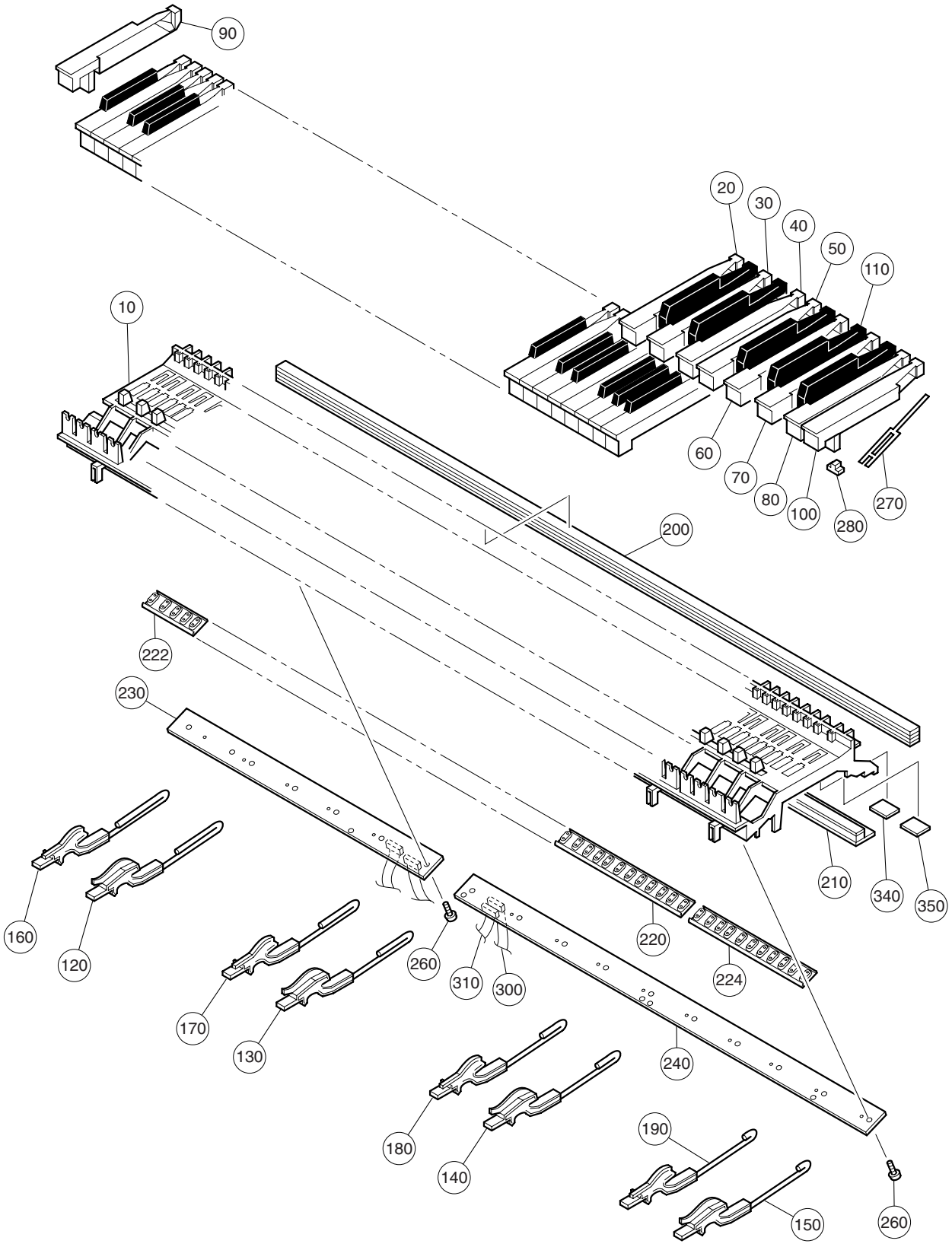

REF NO.	PART NO.	DESCRIPTION			REMARKS	QTY	RANK
		KEYBOARD ASSEMBLY			CLP-130		63
	VZ705400	Keyboard Assembly	A88 K6				
10	--	MK Frame			(VU42210)		
20	VU101000	White Key	C			7	05
30	VU101100	White Key	D			7	05
40	VU101200	White Key	E			7	05
50	VU101300	White Key	F			7	05
60	VU101400	White Key	G			7	05
70	VU101500	White Key	A			7	05
80	VU101600	White Key	B			8	05
90	VU101700	White Key	A'				05
100	VU101800	White Key	C'				05
110	VU102100	Black Key	BL			36	05
120	VY828500	Hammer Assembly, White Key				13	05
130	VY828600	Hammer Assembly, White Key				13	05
140	VY828700	Hammer Assembly, White Key				13	05
150	VY828800	Hammer Assembly, White Key				13	05
160	VY828900	Hammer Assembly, Black Key				9	05
170	VY829000	Hammer Assembly, Black Key				9	05
180	VY829100	Hammer Assembly, Black Key				9	05
190	VY829200	Hammer Assembly, Black Key				9	05
200	VU342100	Stopper	1229X12X14.8T				09
210	V7640100	Stopper Felt	1239.5X28X10.1T				07
220	VY846700	Rubber Contact	GH 2M OCT		D0~C#1,D1~C#2,D2~C#3, D3~C#4,D4~C#5,D5~C#6	6	08
222	VY846800	Rubber Contact	GH 2M OCT		A-1~C#0		08
224	VY846900	Rubber Contact	GH 2M OCT		D6~C7		08
230	VZ705200	Circuit Board	GH-D_SW L				12
240	VZ705300	Circuit Board	GH-D_SW H				13
260	VT413400	Bind Head Tapping Screw-P	3.0X10 MFZN2			17	01
270	V2798500	Spring R	GH WH/BL			88	
270	VZ417900	Spring R	GH WH/BL			88	03
280	V2211300	Rubber 2	GH,GHD,HE			88	03
280	VU237500	Rubber				88	03
300	VU341800	Connector Assembly	9P BLOCK				06
310	VU341900	Connector Assembly	12P NOTE				07
340	VV467900	Stopper Support A	35.5 20 +			7	03
350	VV468100	Stopper Support B	24 20 -			12	03

*: New Parts

RANK: Japan only

■ BENCH (BC-15) (J Only)

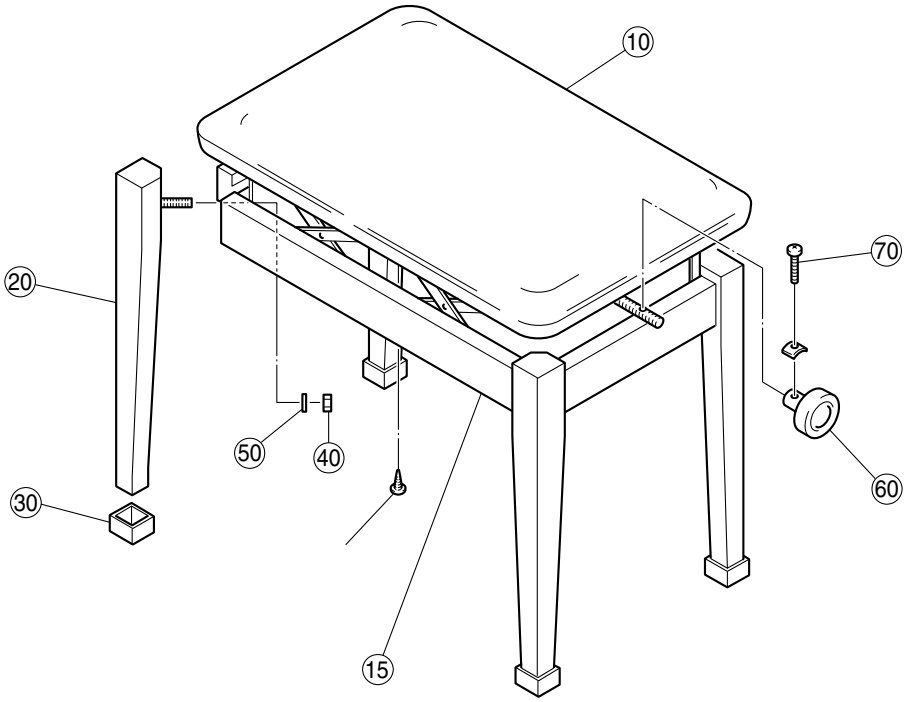

REF NO.	PART NO.	DESCRIPTION			REMARKS	QTY	RANK
		BENCH			CLP-130		
	--	Bench Set Assembly	BC-15		(UV42180)		
10	**NX817860**	Bench Board Assembly					14
15	--	Lift Assembly			(AX01011)		
20	**AX817680**	Leg Assembly				4	15
30	**CX816010**	Cap				4	03
40	--	Hexagonal Nut	#1 10X1.25 MFZN2Y		(0376125)	4	01
50	**03765820**	Spring Washer	#2 10.0 MFZN2Y			4	01
60	**CX816020**	Knob					07
70	**VL064000**	Pan Head Tapping Screw-S	4.0X20 BL				01
		ACCESSORIES					
*	**V6886800**	Wrench					

*: New Parts

RANK: Japan only

■ BENCH

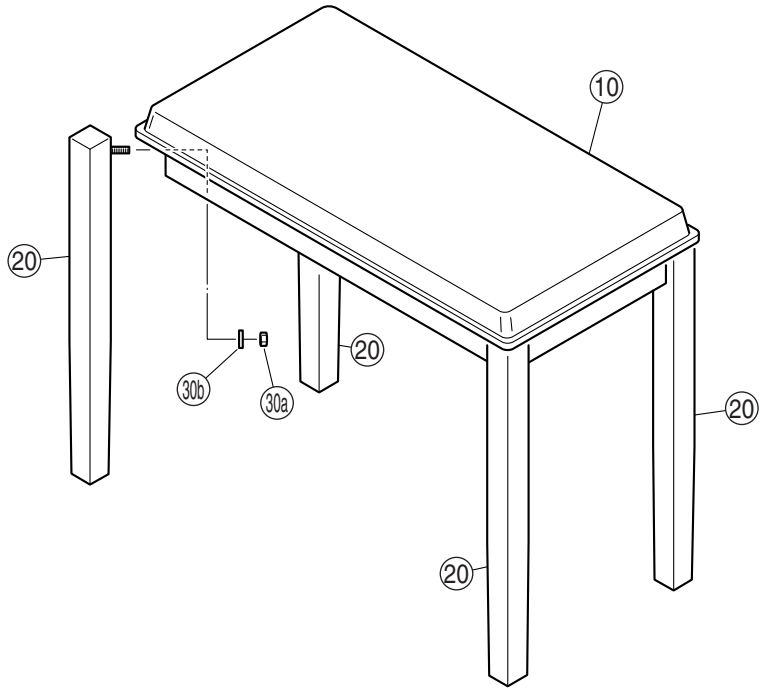

REF NO.	PART NO.	DESCRIPTION			REMARKS	QTY	RANK
		BENCH			CLP-130		
	--	Bench	BC-100DR		(V553140)		
10	V5532900	Bench Board Assembly	BC-100DR				16
20	V8176300	Leg				4	
30	VS530500	Screw Set	BC-XX				03
30a	03761250	Hexagonal Nut	10.0X1.25 MFZN2			4	01
30b	03765820	Spring Washer	10.0 MFZN2Y			4	01
		ACCESSORIES					
*	V6886800	Wrench					

*: New Parts

RANK: Japan only

■ ELECTRICAL PARTS

	REF NO.	PART NO.	DESCRIPTION			REMARKS	QTY	RANK
			ELECTRICAL PARTS			CLP-130		
*		**V8499800**	Circuit Board	AJK		(V849950)(X2246B0)		
*		**V8496200**	Circuit Board	DJK		(V849610)(X2245C0)		
*		**V8495600**	Circuit Board	DM		(X0566D0)		
*		**VT151400**	Circuit Board	FU60 J		J (VT15170)		
						(XQ395A0,XQ779A0)		
		--	Circuit Board	FU60 U		U (VT15150)		
						(XQ395A0,XQ779A0)		
		--	Circuit Board	FU60 E		E,B,K (VT15160)		
						(XQ395A0,XQ779A0)		
		--	Circuit Board	FU60 N		N (VT15290)		
						(XQ395A0,XQ779A0)		
		VZ705200	Circuit Board	GH-D_SW L		(XT240A0)		10
		VZ705300	Circuit Board	GH-D_SW H		(XT241A0)		13
*		**V8586500**	Circuit Board	HP		(V858640)(X2242B0)		
		VT143900	Circuit Board	MA60 J		J,U (VT14410)		18
						(XQ393E0,XQ778E0)		
		VT144000	Circuit Board	MA60 E		E,B,N,K (VT14420)		
						(XQ393E0,XQ778E0)		
*		**V7708200**	Circuit Board	NET1		(V770810)(XT123B0)		
*		**V8496300**	Circuit Board	PEDAL (DJK)		(V849610)(X2245C0)		
		VN637600	Circuit Board	PL YCJ		(VN63740)(XL151B0)		03
		VU659100	Circuit Board	PL YMMA		(VU65900)(XR898A0)		03
		V7910200	Circuit Board	PNL		(V791010)(X0520D0)		
		V7910300	Circuit Board	PNR		(V791010)(X0520D0)		
		V2337300	Circuit Board	PEDAL (DJK)		(V233740)(XR780B0)		07
*		**V8499800**	Circuit Board	AJK		(V849950)(X2246B0)		
	00174	**--**	Jumper Wire	0.55		(VA07890)		
	C0100	**UN866220**	Electrolytic Cap.-BP	2.20 50.0V				01
	C0101	**US063220**	Ceramic Capacitor-B (chip)	2200P 50V K				01
	C0102	**US062220**	Ceramic Capacitor-SL(chip)	220P 50V J				01
	C0103	**UN866470**	Electrolytic Cap.-BP	4.70 50.0V				01
	C0120	**UN866220**	Electrolytic Cap.-BP	2.20 50.0V				01
	C0121	**US063220**	Ceramic Capacitor-B (chip)	2200P 50V K				01
	C0122	**US062220**	Ceramic Capacitor-SL(chip)	220P 50V J				01
	C0123	**UN866470**	Electrolytic Cap.-BP	4.70 50.0V				01
	C0201	**UR866470**	Electrolytic Cap.	4.70 50.0V				01
	C0202	**US062100**	Ceramic Capacitor-SL(chip)	100P 50V J				01
	C0203	**US145100**	Ceramic Capacitor-F (chip)	0.1000 25V Z				01
	C0204	**UN838100**	Electrolytic Cap.	100.00 16.0V				01
	C0205	**UN866470**	Electrolytic Cap.-BP	4.70 50.0V				01
	C0206	**US063100**	Ceramic Capacitor-B (chip)	1000P 50V K				01
	C0251	**UR866470**	Electrolytic Cap.	4.70 50.0V				01
	C0252	**US062100**	Ceramic Capacitor-SL(chip)	100P 50V J				01
	C0253	**US145100**	Ceramic Capacitor-F (chip)	0.1000 25V Z				01
	C0254	**UN838100**	Electrolytic Cap.	100.00 16.0V				01
	C0255	**UN866470**	Electrolytic Cap.-BP	4.70 50.0V				01
	C0256	**US063100**	Ceramic Capacitor-B (chip)	1000P 50V K				01
	C0301	**VR168300**	Monolithic Mylar Capacitor	ECQ-V1H104JL3				01
	C0302	**VR168700**	Monolithic Mylar Capacitor	ECQ-V1H224JL3				01
	C0303	**VR169000**	Monolithic Mylar Capacitor	ECQ-V1H334JL3				01
	C0304	**UA654220**	Mylar Capacitor	0.0220 50V J				01
	C0305	**UA654470**	Mylar Capacitor	0.0470 50V J				01
	C0306	**UA654470**	Mylar Capacitor	0.0470 50V J				01
	C0307	**UA654390**	Mylar Capacitor	0.0390 50V J				01
	C0308	**UA654180**	Mylar Capacitor	0.0180 50V J				01
	C0309	**UA654120**	Mylar Capacitor	0.0120 50V J				01
	C0310	**UA654120**	Mylar Capacitor	0.0120 50V J				01
	C0311	**UA353820**	Mylar Capacitor	8200P 50V J				01
	C0312	**UA353390**	Mylar Capacitor	3900P 50V J				01
	C0313	**UA353560**	Mylar Capacitor	5600P 50V J				
	C0314	**UA352100**	Mylar Capacitor	100P 50V J				01
	C0320	**US062470**	Ceramic Capacitor-SL(chip)	470P 50V J				01
	C0401	**VR168300**	Monolithic Mylar Capacitor	ECQ-V1H104JL3				01
	C0402	**VR168700**	Monolithic Mylar Capacitor	ECQ-V1H224JL3				01
	C0403	**VR169000**	Monolithic Mylar Capacitor	ECQ-V1H334JL3				01
	C0404	**UA654220**	Mylar Capacitor	0.0220 50V J				01
	C0405	**UA654470**	Mylar Capacitor	0.0470 50V J				01
	C0406	**UA654470**	Mylar Capacitor	0.0470 50V J				01

*: New Parts

RANK: Japan only

REF NO.	PART NO.	DESCRIPTION			REMARKS	QTY	RANK
C0407	**UA654390**	Mylar Capacitor	0.0390 50V J				01
C0408	**UA654180**	Mylar Capacitor	0.0180 50V J				01
C0409	**UA654120**	Mylar Capacitor	0.0120 50V J				01
C0410	**UA654120**	Mylar Capacitor	0.0120 50V J				01
C0411	**UA353820**	Mylar Capacitor	8200P 50V J				01
C0412	**UA353390**	Mylar Capacitor	3900P 50V J				01
C0413	**UA353560**	Mylar Capacitor	5600P 50V J				
C0414	**UA352100**	Mylar Capacitor	100P 50V J				01
C0420	**US062470**	Ceramic Capacitor-SL(chip)	470P 50V J				01
C0520	**UR848220**	Electrolytic Cap.	220.00 25.0V				01
C0521	**UR848220**	Electrolytic Cap.	220.00 25.0V				01
C0530	**US064100**	Ceramic Capacitor-B (chip)	0.0100 50V K				01
C0600	**UN866470**	Electrolytic Cap.-BP	4.70 50.0V				01
C0601	**US063100**	Ceramic Capacitor-B (chip)	1000P 50V K				01
C0602	**US063680**	Ceramic Capacitor-B (chip)	6800P 50V K				01
C0610	**UN866470**	Electrolytic Cap.-BP	4.70 50.0V				01
C0612	**US063680**	Ceramic Capacitor-B (chip)	6800P 50V K				01
C0620	**US063100**	Ceramic Capacitor-B (chip)	1000P 50V K				01
C0640	**US063100**	Ceramic Capacitor-B (chip)	1000P 50V K				01
CN501	**VB390000**	Connector Base Post	PH- 4P TE				01
CN502	**VB389900**	Connector Base Post	PH- 3P TE				01
CN510	**VB390400**	Connector Base Post	PH- 8P TE				01
CN520	**VB390500**	Connector Base Post	PH- 9P TE				03
CN530	**VB390300**	Connector Base Post	PH- 7P TE				01
CN540	**LB918020**	Base Post Connector	XH 2P TE				01
D0200	**VB493900**	Diode	MA221				01
D0200	**VV925900**	Diode	RLS-73 TE-11				01
D0640	**VB493900**	Diode	MA221				01
D0640	**VV925900**	Diode	RLS-73 TE-11				01
D0930	**VB493900**	Diode	MA221				01
D0930	**VV925900**	Diode	RLS-73 TE-11				01
D0931	**VB493900**	Diode	MA221				01
D0931	**VV925900**	Diode	RLS-73 TE-11				01
D0932	**VB493900**	Diode	MA221				01
D0932	**VV925900**	Diode	RLS-73 TE-11				01
IC100	**XF291A00**	IC	UPC4570G2		OP AMP		03
IC200	**XT131A00**	IC	LA6517M-TE-R		OP AMP		04
IC300	**XY487A00**	IC	M5229FP		EQUALIZER 7BAND		03
IC400	**XY487A00**	IC	M5229FP		EQUALIZER 7BAND		03
JK600	**VL080500**	Phone Jack	YKB21-5076		AUX IN L/L+R		02
JK610	**VS115400**	Phone Jack	LGR4609-7000 BL		AUX IN R		01
JK620	**VL080500**	Phone Jack	YKB21-5076		AUX OUT L/L+R		02
JK630	**VS115400**	Phone Jack	LGR4609-7000 BL		AUX OUT R		01
JK640	**VP599300**	Pin Jack	WHRE YKC21-3120		AUX OUT LEVEL FIXED L,R		02
L0600	**GE300670**	Ferrite Bead	BL02RN2-R62T4				02
L0620	**GE300670**	Ferrite Bead	BL02RN2-R62T4				02
L0640	**GE300670**	Ferrite Bead	BL02RN2-R62T4				02
R0100	**RD357100**	Carbon Resistor (chip)	10K 63M J				01
R0101	**RD357220**	Carbon Resistor (chip)	22K 63M J				01
R0102	**RD356330**	Carbon Resistor (chip)	3.3K 63M J				01
R0103	**RD355100**	Carbon Resistor (chip)	100 63M J				01
R0104	**RD356680**	Carbon Resistor (chip)	6.8K 63M J				01
R0120	**RD357100**	Carbon Resistor (chip)	10K 63M J				01
R0121	**RD357220**	Carbon Resistor (chip)	22K 63M J				01
R0122	**RD356330**	Carbon Resistor (chip)	3.3K 63M J				01
R0123	**RD355100**	Carbon Resistor (chip)	100 63M J				01
R0124	**RD356680**	Carbon Resistor (chip)	6.8K 63M J				01
R0200	**RD357100**	Carbon Resistor (chip)	10K 63M J				01
R0201	**RD356390**	Carbon Resistor (chip)	3.9K 63M J				01
R0203	**RD354330**	Carbon Resistor (chip)	33 63M J				01
R0204	**RD356100**	Carbon Resistor (chip)	1.0K 63M J				01
R0250	**RD357100**	Carbon Resistor (chip)	10K 63M J				01
R0251	**RD356390**	Carbon Resistor (chip)	3.9K 63M J				01
R0253	**RD354330**	Carbon Resistor (chip)	33 63M J				01
R0254	**RD356100**	Carbon Resistor (chip)	1.0K 63M J				01
R0301	**RD355560**	Carbon Resistor (chip)	560 63M J				01
R0302	**RD357180**	Carbon Resistor (chip)	18K 63M J				01
R0303	**RD355330**	Carbon Resistor (chip)	330 63M J				01
R0304	**RD357220**	Carbon Resistor (chip)	22K 63M J				01
R0305	**RD356150**	Carbon Resistor (chip)	1.5K 63M J				01

*: New Parts

RANK: Japan only

	REF NO.	PART NO.	DESCRIPTION		REMARKS	QTY	RANK
	R0306	**RD357180**	Carbon Resistor (chip)	18K 63M J			01
	R0307	**RD356120**	Carbon Resistor (chip)	1.2K 63M J			01
	R0308	**RD357150**	Carbon Resistor (chip)	15K 63M J			01
	R0309	**RD356220**	Carbon Resistor (chip)	2.2K 63M J			01
	R0310	**RD357180**	Carbon Resistor (chip)	18K 63M J			01
	R0311	**RD357100**	Carbon Resistor (chip)	10K 63M J			01
	R0312	**RD356820**	Carbon Resistor (chip)	8.2K 63M J			01
	R0313	**RD357150**	Carbon Resistor (chip)	15K 63M J			01
	R0314	**RD356180**	Carbon Resistor (chip)	1.8K 63M J			01
	R0320	**RD356330**	Carbon Resistor (chip)	3.3K 63M J			01
	R0321	**RD356470**	Carbon Resistor (chip)	4.7K 63M J			01
	R0322	**RD356100**	Carbon Resistor (chip)	1.0K 63M J			01
	R0323	**RD356180**	Carbon Resistor (chip)	1.8K 63M J			01
	R0401	**RD355560**	Carbon Resistor (chip)	560 63M J			01
	R0402	**RD357180**	Carbon Resistor (chip)	18K 63M J			01
	R0403	**RD355330**	Carbon Resistor (chip)	330 63M J			01
	R0404	**RD357220**	Carbon Resistor (chip)	22K 63M J			01
	R0405	**RD356150**	Carbon Resistor (chip)	1.5K 63M J			01
	R0406	**RD357180**	Carbon Resistor (chip)	18K 63M J			01
	R0407	**RD356120**	Carbon Resistor (chip)	1.2K 63M J			01
	R0408	**RD357150**	Carbon Resistor (chip)	15K 63M J			01
	R0409	**RD356220**	Carbon Resistor (chip)	2.2K 63M J			01
	R0410	**RD357180**	Carbon Resistor (chip)	18K 63M J			01
	R0411	**RD357100**	Carbon Resistor (chip)	10K 63M J			01
	R0412	**RD356820**	Carbon Resistor (chip)	8.2K 63M J			01
	R0413	**RD357150**	Carbon Resistor (chip)	15K 63M J			01
	R0414	**RD356180**	Carbon Resistor (chip)	1.8K 63M J			01
	R0420	**RD356330**	Carbon Resistor (chip)	3.3K 63M J			01
	R0421	**RD356470**	Carbon Resistor (chip)	4.7K 63M J			01
	R0422	**RD356100**	Carbon Resistor (chip)	1.0K 63M J			01
	R0423	**RD356180**	Carbon Resistor (chip)	1.8K 63M J			01
	R0521	**RD350000**	Carbon Resistor (chip)	0 63M J			01
	R0530	**RD350000**	Carbon Resistor (chip)	0 63M J			01
	R0531	**RD350000**	Carbon Resistor (chip)	0 63M J			01
	R0532	**RD356470**	Carbon Resistor (chip)	4.7K 63M J			01
	R0540	**RD357100**	Carbon Resistor (chip)	10K 63M J			01
	R0600	**RD356680**	Carbon Resistor (chip)	6.8K 63M J			01
	R0601	**RD356330**	Carbon Resistor (chip)	3.3K 63M J			01
	R0610	**RD356680**	Carbon Resistor (chip)	6.8K 63M J			01
	R0611	**RD356330**	Carbon Resistor (chip)	3.3K 63M J			01
	R0620	**RD356120**	Carbon Resistor (chip)	1.2K 63M J			01
	R0621	**RD356150**	Carbon Resistor (chip)	1.5K 63M J			01
	R0630	**RD356120**	Carbon Resistor (chip)	1.2K 63M J			01
	R0631	**RD356150**	Carbon Resistor (chip)	1.5K 63M J			01
	R0640	**RD355470**	Carbon Resistor (chip)	470 63M J			01
	R0650	**RD355470**	Carbon Resistor (chip)	470 63M J			01
	R0700	**RD356680**	Carbon Resistor (chip)	6.8K 63M J			01
	R0701	**RD357470**	Carbon Resistor (chip)	47K 63M J			01
	R0710	**RD356220**	Carbon Resistor (chip)	2.2K 63M J			01
	R0711	**RD357220**	Carbon Resistor (chip)	22K 63M J			01
	R0720	**RD357330**	Carbon Resistor (chip)	33K 63M J			01
	R0721	**RD357330**	Carbon Resistor (chip)	33K 63M J			01
	R0930	**RD350000**	Carbon Resistor (chip)	0 63M J			01
	R0931	**RD350000**	Carbon Resistor (chip)	0 63M J			01
	RY200	**V7358200**	Relay	DC FBR12WD12			04
*	RY200	**V8245600**	Relay	DC ATX203			04
*	RY200	**V8616500**	Relay	DC G6S-2			
	RY640	**V7358200**	Relay	DC FBR12WD12			04
*	RY640	**V8245600**	Relay	DC ATX203			04
*	RY640	**V8616500**	Relay	DC G6S-2			
	TR700	**VV556400**	Transistor	2SC2412K Q,R,S			01
*	TR700	**V4767500**	Transistor	2SC2SD601A-(TX) Q,			01
	TR710	**VV556400**	Transistor	2SC2412K Q,R,S			01
*	TR710	**V4767500**	Transistor	2SC2SD601A-(TX) Q,			01
	TR720	**VJ927200**	Transistor	2SA1162 O,Y			01
	TR720	**VQ395600**	Transistor	2SA1052 B,C			01
*		**V8496200**	Circuit Board	DJK	(V849610)(X2245C0)		
*		**V8496300**	Circuit Board	PEDAL (DJK)	(V849610)(X2245C0)		
	C0004	**US064100**	Ceramic Capacitor-B (chip)	0.0100 50V K			01

*: New Parts

RANK: Japan only

REF NO.	PART NO.	DESCRIPTION			REMARKS	QTY	RANK
C0005	**UR838100**	Electrolytic Cap.	100.00 16.0V				01
C0006	**US064100**	Ceramic Capacitor-B (chip)	0.0100 50V K				01
C0007	**UR838100**	Electrolytic Cap.	100.00 16.0V				01
C0008	**US062100**	Ceramic Capacitor-SL(chip)	100P 50V J				01
C0009	**US064100**	Ceramic Capacitor-B (chip)	0.0100 50V K				01
C0010	**US062100**	Ceramic Capacitor-SL(chip)	100P 50V J				01
C0011	**US062100**	Ceramic Capacitor-SL(chip)	100P 50V J				01
C0013	**UR837100**	Electrolytic Cap.	10.00 16.0V				01
C0014	**UN817470**	Electrolytic Cap.-BP	47.00 6.3V				01
C0016	**US064100**	Ceramic Capacitor-B (chip)	0.0100 50V K				01
C0017	**US135100**	Ceramic Capacitor-F (chip)	0.1000 16V Z				01
C0018	**US064100**	Ceramic Capacitor-B (chip)	0.0100 50V K				01
C0019	**US064100**	Ceramic Capacitor-B (chip)	0.0100 50V K				01
C0020	**UR837100**	Electrolytic Cap.	10.00 16.0V				01
C0021	**US064100**	Ceramic Capacitor-B (chip)	0.0100 50V K				01
C0035	**UR838100**	Electrolytic Cap.	100.00 16.0V				01
C0036	**US064100**	Ceramic Capacitor-B (chip)	0.0100 50V K				01
CN003	**VB390100**	Connector Base Post	PH- 5P TE				01
CN004	**VB390700**	Connector Base Post	PH-11P TE				01
CN009	**VB390300**	Connector Base Post	PH- 7P TE				01
CN010	**VB390200**	Connector Base Post	PH- 6P TE				01
CN011	**VB390100**	Connector Base Post	PH- 5P TE				01
D0001	**VB493900**	Diode	MA221				01
-0004	**VB493900**	Diode	MA221				01
D0001	**VV925900**	Diode	RLS-73 TE-11				01
-0004	**VV925900**	Diode	RLS-73 TE-11				01
IC001	**XI348A00**	IC	SC7SU04FEL		INVERTER		01
* IC001	**XY447A00**	IC	TC7SU04F		INVERTER		01
IC002	**XU073A00**	IC	SN75C1168NSR		LINE RECEIVER		05
IC003	**VD473200**	Photo Coupler	6N137				05
JK001	**VT202500**	DIN Connector	5P YKF51-50		MIDI IN		01
JK002	**VT202500**	DIN Connector	5P YKF51-50		MIDI OUT		01
JK003	**VT202500**	DIN Connector	5P YKF51-50		MIDI THRU		01
JK004	**VV269500**	DIN Connector	DIN 8P MD-S813		TO HOST		03
JK006	**V4874800**	DIN Connector	DIN 6P MD-S613		PEDAL		02
L0005	**VY657200**	Chip Inductance	600 BK1608HM601				01
L0006	**RD350000**	Carbon Resistor (chip)	0 63M J				01
L0007	**VY657200**	Chip Inductance	600 BK1608HM601				01
L0008	**VY657200**	Chip Inductance	600 BK1608HM601				01
L0011	**VY657200**	Chip Inductance	600 BK1608HM601				01
-0023	**VY657200**	Chip Inductance	600 BK1608HM601				01
R0006	**RD357100**	Carbon Resistor (chip)	10K 63M J				01
-0009	**RD357100**	Carbon Resistor (chip)	10K 63M J				01
R0010	**RD350000**	Carbon Resistor (chip)	0 63M J				01
R0011	**RD355100**	Carbon Resistor (chip)	100 63M J				01
R0012	**RD355100**	Carbon Resistor (chip)	100 63M J				01
R0013	**RD356100**	Carbon Resistor (chip)	1.0K 63M J				01
R0014	**RD357100**	Carbon Resistor (chip)	10K 63M J				01
R0015	**RD357100**	Carbon Resistor (chip)	10K 63M J				01
R0016	**RD356100**	Carbon Resistor (chip)	1.0K 63M J				01
R0017	**RD357100**	Carbon Resistor (chip)	10K 63M J				01
R0018	**RD355220**	Carbon Resistor (chip)	220 63M J				01
R0019	**RD355220**	Carbon Resistor (chip)	220 63M J				01
R0020	**RD357100**	Carbon Resistor (chip)	10K 63M J				01
R0021	**RD357220**	Carbon Resistor (chip)	22K 63M J				01
R0022	**RD357220**	Carbon Resistor (chip)	22K 63M J				01
R0023	**RD356150**	Carbon Resistor (chip)	1.5K 63M J				01
R0024	**RD357100**	Carbon Resistor (chip)	10K 63M J				01
R0025	**RD357100**	Carbon Resistor (chip)	10K 63M J				01
R0026	**RD357220**	Carbon Resistor (chip)	22K 63M J				01
R0027	**RD356150**	Carbon Resistor (chip)	1.5K 63M J				01
R0028	**RD357100**	Carbon Resistor (chip)	10K 63M J				01
R0029	**RD355220**	Carbon Resistor (chip)	220 63M J				01
R0030	**RD154470**	Carbon Resistor (chip)	47.0 1/4 J				01
-0033	**RD154470**	Carbon Resistor (chip)	47.0 1/4 J				01
R0034	**RD350000**	Carbon Resistor (chip)	0 63M J				01
R0035	**RD350000**	Carbon Resistor (chip)	0 63M J				01
R101	**RD350000**	Carbon Resistor (chip)	0 63M J				
R102	**RD350000**	Carbon Resistor (chip)	0 63M J				
SW001	**VQ665200**	Slide Switch	SSSF144-S06N-0		HOST SELECT		03

*: New Parts

RANK: Japan only

	REF NO.	PART NO.	DESCRIPTION			REMARKS	QTY	RANK
	TR001	**VV556400**	Transistor	2SC2412K Q,R,S				01
	-004	**VV556400**	Transistor	2SC2412K Q,R,S				01
*	TR001	**V4767500**	Transistor	2SC2SD601A-(TX) Q,				01
*	-004	**V4767500**	Transistor	2SC2SD601A-(TX) Q,				01
*		**V8495600**	Circuit Board	DM		(X0566D0)		
	IS	**VK863100**	IC Socket	DICF-42CS-E				03
	C0001	**US062100**	Ceramic Capacitor-SL(chip)	100P 50V J				01
	-0012	**US062100**	Ceramic Capacitor-SL(chip)	100P 50V J				01
	C0013	**US064100**	Ceramic Capacitor-B (chip)	0.0100 50V K				01
	C0014	**US062100**	Ceramic Capacitor-SL(chip)	100P 50V J				01
	-0021	**US062100**	Ceramic Capacitor-SL(chip)	100P 50V J				01
	C0022	**US064100**	Ceramic Capacitor-B (chip)	0.0100 50V K				01
	-0025	**US064100**	Ceramic Capacitor-B (chip)	0.0100 50V K				01
	C0028	**VI055000**	Super Capacitor	0.100F 5.5V FYD0H				04
	C0029	**US064100**	Ceramic Capacitor-B (chip)	0.0100 50V K				01
	C0030	**UF037100**	Electrolytic Cap. (chip)	10 16V				01
	C0031	**US064100**	Ceramic Capacitor-B (chip)	0.0100 50V K				01
	C0032	**US064100**	Ceramic Capacitor-B (chip)	0.0100 50V K				01
	C0033	**UF037100**	Electrolytic Cap. (chip)	10 16V				01
	C0034	**US064100**	Ceramic Capacitor-B (chip)	0.0100 50V K				01
	C0035	**UF037100**	Electrolytic Cap. (chip)	10 16V				01
	C0036	**US064100**	Ceramic Capacitor-B (chip)	0.0100 50V K				01
	C0037	**UF037100**	Electrolytic Cap. (chip)	10 16V				01
	C0038	**US064100**	Ceramic Capacitor-B (chip)	0.0100 50V K				01
	C0039	**US064100**	Ceramic Capacitor-B (chip)	0.0100 50V K				01
	C0040	**UF037100**	Electrolytic Cap. (chip)	10 16V				01
	C0041	**US064100**	Ceramic Capacitor-B (chip)	0.0100 50V K				01
	-0044	**US064100**	Ceramic Capacitor-B (chip)	0.0100 50V K				01
	C0045	**UF037220**	Electrolytic Cap. (chip)	22 16V				01
	C0046	**UF037100**	Electrolytic Cap. (chip)	10 16V				01
	C0047	**US064100**	Ceramic Capacitor-B (chip)	0.0100 50V K				01
	C0048	**US061270**	Ceramic Capacitor-CH(chip)	27P 50V J				01
	C0049	**US135100**	Ceramic Capacitor-F (chip)	0.1000 16V Z				01
	C0050	**US063100**	Ceramic Capacitor-B (chip)	1000P 50V K				01
	C0051	**US135100**	Ceramic Capacitor-F (chip)	0.1000 16V Z				01
	C0053	**US135100**	Ceramic Capacitor-F (chip)	0.1000 16V Z				01
	C0054	**US061220**	Ceramic Capacitor-CH(chip)	22P 50V J				01
	C0055	**US064100**	Ceramic Capacitor-B (chip)	0.0100 50V K				01
	C0056	**US061220**	Ceramic Capacitor-CH(chip)	22P 50V J				01
	C0057	**US064100**	Ceramic Capacitor-B (chip)	0.0100 50V K				01
	C0058	**UF037220**	Electrolytic Cap. (chip)	22 16V				01
	C0059	**UF037220**	Electrolytic Cap. (chip)	22 16V				01
	C0060	**US062220**	Ceramic Capacitor-SL(chip)	220P 50V J				01
	C0061	**US135100**	Ceramic Capacitor-F (chip)	0.1000 16V Z				01
	C0063	**UF037220**	Electrolytic Cap. (chip)	22 16V				01
	C0064	**UF038100**	Electrolytic Cap. (chip)	100 16V				01
	C0065	**UF037220**	Electrolytic Cap. (chip)	22 16V				01
	C0066	**UF037220**	Electrolytic Cap. (chip)	22 16V				01
	C0067	**US064100**	Ceramic Capacitor-B (chip)	0.0100 50V K				01
	C0068	**US062100**	Ceramic Capacitor-SL(chip)	100P 50V J				01
	-0071	**US062100**	Ceramic Capacitor-SL(chip)	100P 50V J				01
	C0072	**US063270**	Ceramic Capacitor-B (chip)	2700P 50V K				01
	C0073	**US063270**	Ceramic Capacitor-B (chip)	2700P 50V K				01
	C0074	**US063120**	Ceramic Capacitor-B (chip)	1200P 50V K				01
	C0075	**US063120**	Ceramic Capacitor-B (chip)	1200P 50V K				01
	C0076	**US062330**	Ceramic Capacitor-SL(chip)	330P 50V J				01
	C0077	**US062330**	Ceramic Capacitor-SL(chip)	330P 50V J				01
	C0078	**UF017220**	Electrolytic Cap. (chip)	22 6.3V				01
	C0079	**US064100**	Ceramic Capacitor-B (chip)	0.0100 50V K				01
	C0081	**UF066220**	Electrolytic Cap. (chip)	2.2 50V				01
	C0082	**UF066220**	Electrolytic Cap. (chip)	2.2 50V				01
	C0083	**US064100**	Ceramic Capacitor-B (chip)	0.0100 50V K				01
	C0085	**UF038100**	Electrolytic Cap. (chip)	100 16V				01
	C0086	**UF037220**	Electrolytic Cap. (chip)	22 16V				01
	C0087	**UF037220**	Electrolytic Cap. (chip)	22 16V				01
	C0089	**US064100**	Ceramic Capacitor-B (chip)	0.0100 50V K				01
	C0091	**US061680**	Ceramic Capacitor-SL(chip)	68P 50V J				01
	C0092	**US061680**	Ceramic Capacitor-SL(chip)	68P 50V J				01
	C0093	**US064100**	Ceramic Capacitor-B (chip)	0.0100 50V K				01

*: New Parts

RANK: Japan only

	REF NO.	PART NO.	DESCRIPTION			REMARKS		QTY	RANK
	-0102	**US064100**	Ceramic Capacitor-B (chip)	0.0100 50V K					01
	C0103	**UF047100**	Electrolytic Cap. (chip)	10 25V					01
	C0105	**US063470**	Ceramic Capacitor-B (chip)	4700P 50V K					01
	C0106	**US063470**	Ceramic Capacitor-B (chip)	4700P 50V K					01
	C0110	**US062100**	Ceramic Capacitor-SL(chip)	100P 50V J					01
	C0111	**US064100**	Ceramic Capacitor-B (chip)	0.0100 50V K					01
	C0114	**US064100**	Ceramic Capacitor-B (chip)	0.0100 50V K					01
	C0115	**US064100**	Ceramic Capacitor-B (chip)	0.0100 50V K					01
	C0116	**UF148330**	Electrolytic Cap. (chip)	330 25V UUR1E3					02
	C0117	**UF128470**	Electrolytic Cap. (chip)	470 10V UUR1A4					02
	C0118	**US064100**	Ceramic Capacitor-B (chip)	0.0100 50V K					01
	-0120	**US064100**	Ceramic Capacitor-B (chip)	0.0100 50V K					01
	C0128	**US064100**	Ceramic Capacitor-B (chip)	0.0100 50V K					01
	C0129	**US064100**	Ceramic Capacitor-B (chip)	0.0100 50V K					01
	C0131	**US064100**	Ceramic Capacitor-B (chip)	0.0100 50V K					01
	-0135	**US064100**	Ceramic Capacitor-B (chip)	0.0100 50V K					01
	CN001	**VF283100**	Connector Base Post	PH-13P TE					01
	CN002	**VB390500**	Connector Base Post	PH- 9P TE					03
	CN003	**VB390400**	Connector Base Post	PH- 8P TE					01
	CN004	**VB390000**	Connector Base Post	PH- 4P TE					01
	CN005	**VB390300**	Connector Base Post	PH- 7P TE					01
	CN006	**VB390700**	Connector Base Post	PH-11P TE					01
	CN008	**VB389900**	Connector Base Post	PH- 3P TE					01
	D0001	**VB493900**	Diode	MA221					01
	D0001	**VV925900**	Diode	RLS-73 TE-11					01
	D0002	**VB493900**	Diode	MA221					01
	D0002	**VV925900**	Diode	RLS-73 TE-11					01
*	IC001	**X2274100**	IC	PROGRAM		MASK ROM			
	IC003	**--**	IC	GLT44116-60TC		DRAM 4M	(X2691A0)		08
	IC003	**--**	IC	IC41C16257-50T		DRAM 4M	(X2911A0)		
	IC003	**XU462A00**	IC	MSM514260C-60TS-K		DRAM 4M			08
	IC003	**XU462B00**	IC	MSM514260E-60TS-K		DRAM 4M			07
	IC004	**XN153A00**	IC	TD62083F-TP1		DRIVER ARRAY			04
*	IC004	**X2550A00**	IC	TD62083F-EL		DRIVER ARRAY			
	IC006	**XW762A00**	IC	TC74HC138AFEL		DEMULTIPLEXER			02
	IC007	**XU947C00**	IC	HG73C205AFD		SWX00B			09
	IC008	**XU947C00**	IC	HG73C205AFD		SWX00B			09
	IC010	**XV297A00**	IC	PCM69AU-3/TE2		D/A CONVERTER			06
	IC010	**--**	IC	PCM69BU/2K		D/A CONVERTER	(X2900A0)		06
	IC012	**XR063A00**	IC	M51951AML		SYSTEM RESET			02
	IC013	**XF291A00**	IC	UPC4570G2		OP AMP			03
	IC015	**XS516A00**	IC	UPC2933T-E1		REGULATOR 3.3V			03
	IC022	**XF291A00**	IC	UPC4570G2		OP AMP			03
	IC023	**XJ598A00**	IC	NJM78L05UA		REGULATOR 5V			02
	IC023	**XS721A00**	IC	UPC78L05T		REGULATOR 5V			02
	IC024	**XR115A00**	IC	UPD43256BGU-70L		SRAM 256K			08
	IC024	**XZ388A00**	IC	W24257S-70LL-EL10		SRAM 256K			08
	IC025	**XM588A00**	IC	TC7S32F		OR			01
	IC026	**XG150A00**	IC	TC7S00F		NAND			03
	IC028	**X2498100**	IC	WAVE 1		MASK ROM 128M			
	IC029	**X2499100**	IC	WAVE 2		MASK ROM 128M			
	IC031	**XR115A00**	IC	UPD43256BGU-70L		SRAM 256K			08
	IC031	**XZ388A00**	IC	W24257S-70LL-EL10		SRAM 256K			08
	IC032	**XM182A00**	IC	TC7S04F		CMOS			01
	L0001	**V5848100**	Chip Inductance	56U ELJFC560JF					01
	-0003	**V5848100**	Chip Inductance	56U ELJFC560JF					01
	R0001	**RD357470**	Carbon Resistor (chip)	47K 63M J					01
	R0002	**RD354470**	Carbon Resistor (chip)	47 63M J					01
	R0003	**RD354470**	Carbon Resistor (chip)	47 63M J					01
	R0004	**RD355100**	Carbon Resistor (chip)	100 63M J					01
	-0009	**RD355100**	Carbon Resistor (chip)	100 63M J					01
	R0010	**RD354470**	Carbon Resistor (chip)	47 63M J					01
	R0011	**RD355100**	Carbon Resistor (chip)	100 63M J					01
	R0012	**RD354470**	Carbon Resistor (chip)	47 63M J					01
	R0014	**RD354470**	Carbon Resistor (chip)	47 63M J					01
	-0017	**RD354470**	Carbon Resistor (chip)	47 63M J					01
	R0018	**RD357470**	Carbon Resistor (chip)	47K 63M J					01
	R0021	**RD354470**	Carbon Resistor (chip)	47 63M J					01
	-0029	**RD354470**	Carbon Resistor (chip)	47 63M J					01
	R0031	**RD354470**	Carbon Resistor (chip)	47 63M J					01

*: New Parts

RANK: Japan only

REF NO.	PART NO.	DESCRIPTION			REMARKS	QTY	RANK
R0032	**RD357470**	Carbon Resistor (chip)	47K 63M J				01
R0033	**RD354470**	Carbon Resistor (chip)	47 63M J				01
R0034	**RD354470**	Carbon Resistor (chip)	47 63M J				01
R0035	**RD357470**	Carbon Resistor (chip)	47K 63M J				01
R0036	**RD354470**	Carbon Resistor (chip)	47 63M J				01
R0037	**RD354470**	Carbon Resistor (chip)	47 63M J				01
R0041	**RD354470**	Carbon Resistor (chip)	47 63M J				01
R0042	**RD354470**	Carbon Resistor (chip)	47 63M J				01
R0045	**RD355100**	Carbon Resistor (chip)	100 63M J				01
R0046	**RD354470**	Carbon Resistor (chip)	47 63M J				01
R0047	**RD355100**	Carbon Resistor (chip)	100 63M J				01
R0048	**RD355100**	Carbon Resistor (chip)	100 63M J				01
R0049	**RD354470**	Carbon Resistor (chip)	47 63M J				01
R0050	**RD355100**	Carbon Resistor (chip)	100 63M J				01
R0051	**RD354470**	Carbon Resistor (chip)	47 63M J				01
-0053	**RD354470**	Carbon Resistor (chip)	47 63M J				01
R0054	**RD357100**	Carbon Resistor (chip)	10K 63M J				01
R0055	**RD357100**	Carbon Resistor (chip)	10K 63M J				01
R0056	**RD357470**	Carbon Resistor (chip)	47K 63M J				01
R0057	**RD357100**	Carbon Resistor (chip)	10K 63M J				01
-0059	**RD357100**	Carbon Resistor (chip)	10K 63M J				01
R0060	**RD354470**	Carbon Resistor (chip)	47 63M J				01
-0064	**RD354470**	Carbon Resistor (chip)	47 63M J				01
R0065	**RD357470**	Carbon Resistor (chip)	47K 63M J				01
R0066	**RD357470**	Carbon Resistor (chip)	47K 63M J				01
R0068	**RD356150**	Carbon Resistor (chip)	1.5K 63M J				01
R0069	**RD355100**	Carbon Resistor (chip)	100 63M J				01
R0071	**RD356100**	Carbon Resistor (chip)	1.0K 63M J				01
-0073	**RD356100**	Carbon Resistor (chip)	1.0K 63M J				01
R0074	**RD354470**	Carbon Resistor (chip)	47 63M J				01
-0077	**RD354470**	Carbon Resistor (chip)	47 63M J				01
R0078	**RD358470**	Carbon Resistor (chip)	470K 63M J				01
R0079	**RD357100**	Carbon Resistor (chip)	10K 63M J				01
R0080	**RD357100**	Carbon Resistor (chip)	10K 63M J				01
R0081	**RD350000**	Carbon Resistor (chip)	0 63M J				01
R0082	**RD356220**	Carbon Resistor (chip)	2.2K 63M J				01
R0083	**RD355100**	Carbon Resistor (chip)	100 63M J				01
-0086	**RD355100**	Carbon Resistor (chip)	100 63M J				01
R0087	**RD356220**	Carbon Resistor (chip)	2.2K 63M J				01
-0091	**RD356220**	Carbon Resistor (chip)	2.2K 63M J				01
R0092	**RD357100**	Carbon Resistor (chip)	10K 63M J				01
-0095	**RD357100**	Carbon Resistor (chip)	10K 63M J				01
R0096	**RD356470**	Carbon Resistor (chip)	4.7K 63M J				01
R0097	**RD356470**	Carbon Resistor (chip)	4.7K 63M J				01
R0098	**RD354330**	Carbon Resistor (chip)	33 63M J				01
R0099	**RD354330**	Carbon Resistor (chip)	33 63M J				01
R0102	**RD355100**	Carbon Resistor (chip)	100 63M J				01
R0103	**RD355100**	Carbon Resistor (chip)	100 63M J				01
R0125	**RD354820**	Carbon Resistor (chip)	82 63M J				01
R0126	**RD354820**	Carbon Resistor (chip)	82 63M J				01
R0127	**RD357100**	Carbon Resistor (chip)	10K 63M J				01
R0128	**RD350000**	Carbon Resistor (chip)	0 63M J				01
R0130	**RD357100**	Carbon Resistor (chip)	10K 63M J				01
R0132	**RD354470**	Carbon Resistor (chip)	47 63M J				01
R0133	**RD354470**	Carbon Resistor (chip)	47 63M J				01
R0134	**RD357470**	Carbon Resistor (chip)	47K 63M J				01
-0137	**RD357470**	Carbon Resistor (chip)	47K 63M J				01
R0138	**RD350000**	Carbon Resistor (chip)	0 63M J				01
R0140	**RD350000**	Carbon Resistor (chip)	0 63M J				01
R0145	**RD357100**	Carbon Resistor (chip)	10K 63M J				01
R0148	**RD350000**	Carbon Resistor (chip)	0 63M J				01
R0149	**RD357100**	Carbon Resistor (chip)	10K 63M J				01
R0152	**RD354470**	Carbon Resistor (chip)	47 63M J				01
-0155	**RD354470**	Carbon Resistor (chip)	47 63M J				01
R0156	**RD350000**	Carbon Resistor (chip)	0 63M J				01
R0157	**RD356100**	Carbon Resistor (chip)	1.0K 63M J				01
R0158	**RD356100**	Carbon Resistor (chip)	1.0K 63M J				01
R0161	**RD354470**	Carbon Resistor (chip)	47 63M J				01
-0174	**RD354470**	Carbon Resistor (chip)	47 63M J				01
TA001	**VT943400**	Transistor Array	TD62785F(TP1)				04

*: New Parts

RANK: Japan only

	REF NO.	PART NO.	DESCRIPTION			REMARKS	QTY	RANK
*	TA001	**V8566600**	Transistor Array	TD62785F(EL)				
	X0001	**VZ703600**	Quartz Crystal Unit	8.4672M SMD-49				03
	ZD001	**VU172000**	Zener Diode	UDZS5.6BTE-17 5.6V				01
		--	Circuit Board	FU60 J		J (VT15140)		
		--	Circuit Board	FU60 U		U (XQ395A0,XQ779A0) (VT15150) (XQ395A0,XQ779A0)		
		--	Circuit Board	FU60 E		E,G (VT15160) (XQ395A0,XQ779A0)		
		--	Circuit Board	FU60 N		N (VT15290)		
		LB201530	Fuse Holder	PC-PH1				01
		--	Jumper Wire	0.55		(VD04170)		
⚠		**VT139600**	Voltage Selector	M1684-E		N		04
⚠		**VT308100**	AC Inlet	CCT9302-0101M		J,E,N		02
⚠		**VT308200**	AC Inlet	CCT9302-0201		U		02
⚠	C0001	**V7682800**	Capacitor	0.010 VA1 J.U.C.S				01
⚠	C0001	**VT575200**	Capacitor	0.01 400V J.U.C.S				01
⚠	C0002	**FI383470**	Capacitor	4700P 400V U.C.S.V				01
⚠	C0002	**V7683000**	Capacitor	4700P 250V J.U.C.S				01
⚠	C0003	**FI383470**	Capacitor	4700P 400V U.C.S.V				01
⚠	C0003	**V7683000**	Capacitor	4700P 250V J.U.C.S				01
	CN001	**LB932030**	Base Post Connector	VH- 3P TE				01
	CN002	**LB932060**	Base Post Connector	VH- 6P TE				01
⚠	F0001	**KB003060**	Fuse	1.60A S		E		01
⚠	F0001	**KB003590**	Fuse	3.00A JU		J,U,N		01
⚠	F0002	**KB003060**	Fuse	1.60A S		N		01
⚠	F0003	**KB003060**	Fuse	1.60A S		N		01
	J0001	--	Jumper Wire	0.55		J,U,E (VD04170)		
	L0001	--	Jumper Wire	0.55		(VD04170)		
	L0002	--	Jumper Wire	0.55		(VD04170)		
	L0003	**VF790900**	Coil	SU10V-D20010				03
		VZ705200	Circuit Board	GH-D_SW L		(XT240A0)		10
		VB390400	Connector Base Post	PH- 8P TE				01
		VB390500	Connector Base Post	PH- 9P TE				03
		VB390800	Connector Base Post	PH-12P TE				01
		VB941200	Diode	1SS133,1SS176				01
		XR632A00	IC	YMZ702-D		KSN2		09
		--	Dust Proof Cloth			(VU45960)		
	C1	**FG644100**	Electrolytic Cap.	0.0100 50V Z				01
	-3	**FG644100**	Electrolytic Cap.	0.0100 50V Z				01
	C5	**VF760000**	Electrolytic Cap.-KS	100.00 10.0V				01
	J1	--	Jumper Wire	0.55		(VD04170)		
	J2	--	Jumper Wire	0.55		(VD04170)		
	R1	**HF759100**	Carbon Resistor	1.0M 1/4 J				01
	R2	**HF755100**	Carbon Resistor	100.0 1/4 J				01
	R3	**HF755100**	Carbon Resistor	100.0 1/4 J				01
	R4	**HF756100**	Carbon Resistor	1.0K 1/4 J				01
	CL1	**VI653000**	Ceramic Resonator	CST4.00MGW040				01
	RA1	**VU483500**	Resistor Array	RGLD12X103J				01
		VZ705300	Circuit Board	GH-D_SW H		(XT241A0)		13
		VB390500	Connector Base Post	PH- 9P TE				03
		VB390800	Connector Base Post	PH-12P TE				01
		VB941200	Diode	1SS133,1SS176				01
		--	Dust Proof Cloth			(VU45980)		
*		**V8586500**	Circuit Board	HP		(V858640)(X2242B0)		
		--	Jumper Wire	0.55		(VA07890)		
	WH1	**VT890700**	Earth Wire	150mm				01
	C0001	**FG413100**	Ceramic Capacitor-B	1000P 50V K				01
	-0005	**FG413100**	Ceramic Capacitor-B	1000P 50V K				01
	CN001	**VB858600**	Connector Base Post	PH- 7P SE				01
	CN002	**VB858100**	Connector Base Post	PH- 2P SE				01
	JK001	**LB101870**	Phone Jack	YKB21-5006		PHONES		03
	JK002	**LB101870**	Phone Jack	YKB21-5006		PHONES		03
	L0001	**VB971100**	Coil	FL5R200QN				01
	-0006	**VB971100**	Coil	FL5R200QN				01
	R0001	**V3609100**	Carbon Resistor	68.0 1/2 J				01

*: New Parts

RANK: Japan only

REF NO.	PART NO.	DESCRIPTION			REMARKS	QTY	RANK
-0004	**V3609100**	Carbon Resistor	68.0 1/2 J				01
R0001	**VK992200**	Carbon Resistor	68.0 1/2 J				01
-0004	**VK992200**	Carbon Resistor	68.0 1/2 J				01
SW001	**VS053400**	Slide Switch	SSSF11496A		SPEAKER		02
	VT143900	Circuit Board	MA60		J,U (VT14410) (XQ393E0,XQ778E0)		18
	VT144000	Circuit Board	MA60		E,G,N (VT14420) (XQ393E0,XQ778F0)		
	VD041700	Jumper Wire	0.55				
	VJ834500	Insulation Sheet					03
	VT443500	Support, PCB	T=8				03
	VT740000	Support, PCB	3T-9 T=9				03
C0001	**VA302600**	Ceramic Capacitor-E	0.0100 500V P				01
C0003	**V0069900**	Electrolytic Cap.	4700 16.0V				
C0003	**VU642700**	Electrolytic Cap.	4700 16.0V				03
C0004	**V0069900**	Electrolytic Cap.	4700 16.0V				
C0004	**VU642700**	Electrolytic Cap.	4700 16.0V				03
C0005	**VL232400**	Electrolytic Cap.	3300 35.0V				04
-0008	**VL232400**	Electrolytic Cap.	3300 35.0V				04
C0009	**UR866100**	Electrolytic Cap.	1.00 50.0V				01
-0011	**UR866100**	Electrolytic Cap.	1.00 50.0V				01
C0012	**FG613100**	Ceramic Capacitor-B	1000P 50V K				01
C0013	**UR838100**	Electrolytic Cap.	100.00 16.0V				01
C0016	**UR866100**	Electrolytic Cap.	1.00 50.0V				01
C0017	**VC694800**	Semiconductive Cera. Cap.	0.1000 25V Z				01
C0018	**UR866100**	Electrolytic Cap.	1.00 50.0V				01
C0019	**UR866100**	Electrolytic Cap.	1.00 50.0V				01
C0020	**UR868100**	Electrolytic Cap.	100.00 50.0V				01
C0021	**UR868100**	Electrolytic Cap.	100.00 50.0V				01
C0022	**FG613100**	Ceramic Capacitor-B	1000P 50V K				01
C0023	**UR866100**	Electrolytic Cap.	1.00 50.0V				01
C0024	**UR838100**	Electrolytic Cap.	100.00 16.0V				01
C0025	**VC694800**	Semiconductive Cera. Cap.	0.1000 25V Z				01
C0026	**VC694800**	Semiconductive Cera. Cap.	0.1000 25V Z				01
C0027	**FG613100**	Ceramic Capacitor-B	1000P 50V K				01
C0028	**UR866100**	Electrolytic Cap.	1.00 50.0V				01
C0029	**UR838100**	Electrolytic Cap.	100.00 16.0V				01
C0030	**VC694800**	Semiconductive Cera. Cap.	0.1000 25V Z				01
C0031	**VC694800**	Semiconductive Cera. Cap.	0.1000 25V Z				01
C0032	**UR838100**	Electrolytic Cap.	100.00 16.0V				01
C0033	**UR866330**	Electrolytic Cap.	3.30 50.0V				01
CN001	**LB932050**	Base Post Connector	VH- 5P TE				01
CN003	**LB918030**	Base Post Connector	XH 3P TE				01
CN004	**VB390300**	Connector Base Post	PH- 7P TE				01
CN005	**LB932040**	Base Post Connector	VH- 4P TE				01
CN006	**VB390500**	Connector Base Post	PH- 9P TE				03
D0001	**VB481900**	Diode	11ES4				01
-0005	**VB481900**	Diode	11ES4				01
DB001	**VK421800**	Diode Stack	D5SBA20 6.0A 200V				03
DB002	**VQ111500**	Diode Stack	D3SBA20-4103 4.0A				03
⚠ F0001	**KB003240**	Fuse	5.00A S		E		01
⚠ F0001	**KB003630**	Fuse	5.00A JU		J		01
⚠ F0002	**KB003240**	Fuse	5.00A S		E		01
⚠ F0002	**KB003630**	Fuse	5.00A JU		J		01
⚠ F0003	**KB003240**	Fuse	5.00A S		E		01
⚠ F0003	**KB003630**	Fuse	5.00A JU		J		01
FUHOL	**VP206500**	Fuse Holder	EYF-52BC				01
IC001	**XQ437A00**	IC	SI-3051N		REGULATOR 5V		03
IC002	**XQ667A00**	IC	M5237L		REGULATOR 5V		02
IC003	**XJ602A00**	IC	NJM78M12FA		REGULATOR 12V 0.5A		02
IC004	**XD343A00**	IC	NJM79M12FA		REGULATOR -12V		03
IC005	**XL972A00**	IC	STK401-040		POWER AMP		08
J0003	**--**	Jumper Wire	0.55		(VD04170)		
J0004	**--**	Jumper Wire	0.55		(VD04170)		
R0003	**HF756100**	Carbon Resistor	1.0K 1/4 J				01
R0004	**HF755220**	Carbon Resistor	220.0 1/4 J				01
R0005	**HF754560**	Carbon Resistor	56.0 1/4 J				01
R0006	**HF757100**	Carbon Resistor	10.0K 1/4 J				01
R0007	**HF756330**	Carbon Resistor	3.3K 1/4 J				01

*: New Parts

RANK: Japan only

	REF NO.	PART NO.	DESCRIPTION			REMARKS	QTY	RANK
	R0008	**HW095100**	Fuse Resistor	100.0 1/4 J				01
	R0009	**HW095100**	Fuse Resistor	100.0 1/4 J				01
	R0010	**HF755560**	Carbon Resistor	560.0 1/4 J				01
	R0011	**HF757100**	Carbon Resistor	10.0K 1/4 J				01
	R0012	**HF755560**	Carbon Resistor	560.0 1/4 J				01
	R0013	**HF757100**	Carbon Resistor	10.0K 1/4 J				01
	R0014	**VC742500**	Metal Oxide Film Resistor	10.0 1W J				01
	R0015	**HF757100**	Carbon Resistor	10.0K 1/4 J				01
	R0016	**HF755560**	Carbon Resistor	560.0 1/4 J				01
	R0017	**HF757100**	Carbon Resistor	10.0K 1/4 J				01
	R0018	**HF755560**	Carbon Resistor	560.0 1/4 J				01
	R0019	**HF757100**	Carbon Resistor	10.0K 1/4 J				01
	R0020	**VC742500**	Metal Oxide Film Resistor	10.0 1W J				01
	R0021	**HF757100**	Carbon Resistor	10.0K 1/4 J				01
	R0022	**HF756330**	Carbon Resistor	3.3K 1/4 J				01
	R0023	**HF756330**	Carbon Resistor	3.3K 1/4 J				01
	RY001	**VK881200**	Relay	DC G5Z-2A-YA				04
	TR001	**VJ828100**	Transistor	2SA1451A-O/Y O.Y				04
	TR002	**IC1815M0**	Transistor	2SC1815 Y,GR				01
	-004	**IC1815M0**	Transistor	2SC1815 Y,GR				01
*		**V7708200**	Circuit Board	NET1		(V770810)(XT123B0)		
		--	Jumper Wire	0.55		(VD04170)		
	C0001	**VU643600**	Electrolytic Cap.-BP	1.00UF 63.0V				01
	C0001	**--**	Electrolytic Cap.-BP	1.00 63.0V		(V592800)		
	C0002	**VU643600**	Electrolytic Cap.-BP	1.00UF 63.0V				01
	C0002	**--**	Electrolytic Cap.-BP	1.00 63.0V		(V592800)		
	CN001	**LB932040**	Base Post Connector	VH- 4P TE				01
	CN002	**LB932080**	Base Post Connector	VH- 8P TE				01
		VN637600	Circuit Board	PL YCJ		(VN63740)(XL151B0)		03
		VB858100	Connector Base Post	PH- 2P SE				01
		VD180000	LED	SLZ-190B-03 RE		POWER		01
		VU659100	Circuit Board	PL YMMA		(VU65900)(XR898A0)		03
		VB858100	Connector Base Post	PH- 2P SE				01
		VD180000	LED	SLZ-190B-03 RE		POWER		01
		V7910200	Circuit Board	PNL		(V791010)(X0520D0)		
		V7910300	Circuit Board	PNR		(V791010)(X0520D0)		
		VD041700	Jumper Wire	0.55				
		--	GND Wire			(V803890)		
	C0301	**UA354220**	Mylar Capacitor	0.0220 50V J				
	-0304	**UA354220**	Mylar Capacitor	0.0220 50V J				
	CN101	**VK015400**	Connector Base Post	PH-13P SE				01
	CN102	**VB858800**	Connector Base Post	PH- 9P SE				01
	CN201	**VK015400**	Connector Base Post	PH-13P SE				01
	CN202	**VB858800**	Connector Base Post	PH- 9P SE				01
	CN301	**VB858700**	Connector Base Post	PH- 8P SE				01
	D0101	**VB941200**	Diode	1SS133,1SS176				01
	-0109	**VB941200**	Diode	1SS133,1SS176				01
	D0201	**VB941200**	Diode	1SS133,1SS176				01
	-0224	**VB941200**	Diode	1SS133,1SS176				01
	D0101	**VD631600**	Diode	1SS133,176,HSS104				01
	-0109	**VD631600**	Diode	1SS133,176,HSS104				01
	D0201	**VD631600**	Diode	1SS133,176,HSS104				01
	-0224	**VD631600**	Diode	1SS133,176,HSS104				01
	LD101	**VQ323900**	LED Display	SL-9351S		TEMPO/OTHER VALUE		05
	LD102	**VD180000**	LED	SLZ-190B-03 RE		TEMPO		01
	LD103	**VD180000**	LED	SLZ-190B-03 RE		FUNCTION#		01
	LD104	**VU067800**	LED	SEL6210S-TP5 RE		PRESET		01
	LD105	**VD180000**	LED	SLZ-190B-03 RE		USER1		01
	LD106	**VD180000**	LED	SLZ-190B-03 RE		USER2		01
	LD107	**VD180000**	LED	SLZ-190B-03 RE		USER3		01
	LD201	**V8066800**	LED	SML72423CTP15RE/GR		TRACK1		01
	LD202	**V8066800**	LED	SML72423CTP15RE/GR		TRACK2		01
	LD203	**VU067800**	LED	SEL6210S-TP5 RE		GRAND PIANO1		01
	LD204	**VU067800**	LED	SEL6210S-TP5 RE		GRAND PIANO2		01
	LD205	**VU067800**	LED	SEL6210S-TP5 RE		E.PIANO1		01
	LD206	**VU067800**	LED	SEL6210S-TP5 RE		E.PIANO2		01

*: New Parts

RANK: Japan only

REF NO.	PART NO.	DESCRIPTION			REMARKS	QTY	RANK
LD207	**VU067800**	LED	SEL6210S-TP5 RE		HARPSICHORD		01
LD208	**VU067800**	LED	SEL6210S-TP5 RE		E.CLAVICHORD		01
LD209	**VU067800**	LED	SEL6210S-TP5 RE		VIBRAPHONE		01
LD210	**VU067800**	LED	SEL6210S-TP5 RE		CHURCH ORGAN		01
LD211	**VU067800**	LED	SEL6210S-TP5 RE		JAZZ ORGAN		01
LD212	**VU067800**	LED	SEL6210S-TP5 RE		STRINGS		01
LD213	**VU067800**	LED	SEL6210S-TP5 RE		CHOIR		01
LD214	**VU067800**	LED	SEL6210S-TP5 RE		GUITAR		01
LD215	**VU067800**	LED	SEL6210S-TP5 RE		WOOD BASS		01
LD216	**VU067800**	LED	SEL6210S-TP5 RE		E.BASS		01
LD217	**VU067800**	LED	SEL6210S-TP5 RE		VARIATION		01
LD218	**VU067800**	LED	SEL6210S-TP5 RE		SPLIT		01
LD219	**VD180000**	LED	SLZ-190B-03 RE		ROOM		01
LD220	**VD180000**	LED	SLZ-190B-03 RE		HALL1		01
LD221	**VD180000**	LED	SLZ-190B-03 RE		HALL2		01
LD222	**VD180000**	LED	SLZ-190B-03 RE		STAGE		01
LD223	**VD180000**	LED	SLZ-190B-03 RE		CHORUS		01
LD224	**VD180000**	LED	SLZ-190B-03 RE		PHASER		01
LD225	**VD180000**	LED	SLZ-190B-03 RE		TREMOLO		01
LD226	**VD180000**	LED	SLZ-190B-03 RE		DELAY		01
LD227	**VD180000**	LED	SLZ-190B-03 RE		HARD		01
LD228	**VD180000**	LED	SLZ-190B-03 RE		MEDIUM		01
LD229	**VD180000**	LED	SLZ-190B-03 RE		SOFT		01
LD230	**VU067800**	LED	SEL6210S-TP5 RE		ON		01
R0101	**HF754470**	Carbon Resistor	47.0 1/4 J				01
-0109	**HF754470**	Carbon Resistor	47.0 1/4 J				01
R0201	**HF754470**	Carbon Resistor	47.0 1/4 J				01
-0203	**HF754470**	Carbon Resistor	47.0 1/4 J				01
R0301	**HF756820**	Carbon Resistor	8.2K 1/4 J				01
R0302	**HF756820**	Carbon Resistor	8.2K 1/4 J				01
SW101	**VV439800**	Tact Switch	SKQNAJ		DEMO		01
SW101	**V8889300**	Tact Switch	EVQ 11Y 07K		DEMO		01
SW102	**VV439800**	Tact Switch	SKQNAJ		METRONOME		01
SW102	**V8889300**	Tact Switch	EVQ 11Y 07K		METRONOME		01
SW103	**VV439800**	Tact Switch	SKQNAJ		TEMPO/FUNCTION#		01
SW103	**V8889300**	Tact Switch	EVQ 11Y 07K		TEMPO/FUNCTION#		01
SW104	**VV439800**	Tact Switch	SKQNAJ		DOWN		01
SW104	**V8889300**	Tact Switch	EVQ 11Y 07K		DOWN		01
SW105	**VV439800**	Tact Switch	SKQNAJ		UP		01
SW105	**V8889300**	Tact Switch	EVQ 11Y 07K		UP		01
SW106	**VV439800**	Tact Switch	SKQNAJ		-/NO		01
SW106	**V8889300**	Tact Switch	EVQ 11Y 07K		-/NO		01
SW107	**VV439800**	Tact Switch	SKQNAJ		+/YES		01
SW107	**V8889300**	Tact Switch	EVQ 11Y 07K		+/YES		01
SW108	**VV439800**	Tact Switch	SKQNAJ		PRESET		01
SW108	**V8889300**	Tact Switch	EVQ 11Y 07K		PRESET		01
SW109	**VV439800**	Tact Switch	SKQNAJ		USER1/2/3		01
SW109	**V8889300**	Tact Switch	EVQ 11Y 07K		USER1/2/3		01
SW201	**VV439800**	Tact Switch	SKQNAJ		TRACK1		01
SW201	**V8889300**	Tact Switch	EVQ 11Y 07K		TRACK1		01
SW202	**VV439800**	Tact Switch	SKQNAJ		TRACK2		01
SW202	**V8889300**	Tact Switch	EVQ 11Y 07K		TRACK2		01
SW203	**VV439800**	Tact Switch	SKQNAJ		SONG START/STOP		01
SW203	**V8889300**	Tact Switch	EVQ 11Y 07K		SONG START/STOP		01
SW204	**VV439800**	Tact Switch	SKQNAJ		REC		01
SW204	**V8889300**	Tact Switch	EVQ 11Y 07K		REC		01
SW205	**VV439800**	Tact Switch	SKQNAJ		GRAND PIANO1		01
SW205	**V8889300**	Tact Switch	EVQ 11Y 07K		GRAND PIANO1		01
SW206	**VV439800**	Tact Switch	SKQNAJ		GRAND PIANO2		01
SW206	**V8889300**	Tact Switch	EVQ 11Y 07K		GRAND PIANO2		01
SW207	**VV439800**	Tact Switch	SKQNAJ		E.PIANO1		01
SW207	**V8889300**	Tact Switch	EVQ 11Y 07K		E.PIANO1		01
SW208	**VV439800**	Tact Switch	SKQNAJ		E.PIANO2		01
SW208	**V8889300**	Tact Switch	EVQ 11Y 07K		E.PIANO2		01
SW209	**VV439800**	Tact Switch	SKQNAJ		HARPSICHORD		01
SW209	**V8889300**	Tact Switch	EVQ 11Y 07K		HARPSICHORD		01
SW210	**VV439800**	Tact Switch	SKQNAJ		E.CLAVICHORD		01
SW210	**V8889300**	Tact Switch	EVQ 11Y 07K		E.CLAVICHORD		01
SW211	**VV439800**	Tact Switch	SKQNAJ		VIBRAPHONE		01
SW211	**V8889300**	Tact Switch	EVQ 11Y 07K		VIBRAPHONE		01

*: New Parts

RANK: Japan only

REF NO.	PART NO.	DESCRIPTION			REMARKS	QTY	RANK
SW212	**VV439800**	Tact Switch	SKQNAJ		CHURCH ORGAN		01
SW212	**V8889300**	Tact Switch	EVQ 11Y 07K		CHURCH ORGAN		01
SW213	**VV439800**	Tact Switch	SKQNAJ		JAZZ ORGAN		01
SW213	**V8889300**	Tact Switch	EVQ 11Y 07K		JAZZ ORGAN		01
SW214	**VV439800**	Tact Switch	SKQNAJ		STRINGS		01
SW214	**V8889300**	Tact Switch	EVQ 11Y 07K		STRINGS		01
SW215	**VV439800**	Tact Switch	SKQNAJ		CHOIR		01
SW215	**V8889300**	Tact Switch	EVQ 11Y 07K		CHOIR		01
SW216	**VV439800**	Tact Switch	SKQNAJ		GUITAR		01
SW216	**V8889300**	Tact Switch	EVQ 11Y 07K		GUITAR		01
SW217	**VV439800**	Tact Switch	SKQNAJ		WOOD BASS		01
SW217	**V8889300**	Tact Switch	EVQ 11Y 07K		WOOD BASS		01
SW218	**VV439800**	Tact Switch	SKQNAJ		E.BASS		01
SW218	**V8889300**	Tact Switch	EVQ 11Y 07K		E.BASS		01
SW219	**VV439800**	Tact Switch	SKQNAJ		VARIATION		01
SW219	**V8889300**	Tact Switch	EVQ 11Y 07K		VARIATION		01
SW220	**VV439800**	Tact Switch	SKQNAJ		SPLIT		01
SW220	**V8889300**	Tact Switch	EVQ 11Y 07K		SPLIT		01
SW221	**VV439800**	Tact Switch	SKQNAJ		REVERB		01
SW221	**V8889300**	Tact Switch	EVQ 11Y 07K		REVERB		01
SW222	**VV439800**	Tact Switch	SKQNAJ		EFFECT		01
SW222	**V8889300**	Tact Switch	EVQ 11Y 07K		EFFECT		01
SW223	**VV439800**	Tact Switch	SKQNAJ		TOUCH		01
SW223	**V8889300**	Tact Switch	EVQ 11Y 07K		TOUCH		01
SW224	**VV439800**	Tact Switch	SKQNAJ		TRANSPOSE		01
SW224	**V8889300**	Tact Switch	EVQ 11Y 07K		TRANSPOSE		01
VR301	**V4007500**	Slide Variable Resistor	1B10K RS30112A9A02		MASTER VOLUME		03
VR302	**V0042000**	Slide Variable Resistor	B 10.0K RS30112C9		BRILLIANCE		03
	V2337300	Circuit Board	PEDAL (DJK)		(V233740)(XR780B0)		07
	VB390200	Connector Base Post	PH- 6P TE				01
	--	Jumper Wire	0.55		(VD04170)		
	--	GND Wire	L=30		(VZ01760)		
⚠	**XQ430C00**	Power Transformer	29WP243 UL/CSA		U		11
⚠	**XQ429A00**	Power Transformer	GA-60J		J		12
⚠	**XQ429B00**	Power Transformer	GA-60J		J		12
⚠	**XQ430C00**	Power Transformer	29WP243 UL/CSA		U		11
⚠	**XQ431B00**	Power Transformer	GA-60 E IEC65		E,B,K		12
⚠	**XQ432A00**	Power Transformer	GA-60 N		N		14
⚠	**XQ432B00**	Power Transformer	GA-60 N		N		14
	XL455A00	Speaker	5.0cm 16ohm 60W				07
	XV746A00	Speaker	16.0cm 6ohm 40W				09
	VU456000	Rubber Contact	1 PEDAL				03
⚠	**VC843500**	Push Switch	SDDLB1216A J.U.C.S		POWER		03
	VY846700	Rubber Contact	GH 2M OCT		D0~C#1,D1~C#2,D2~C#3,		08
					D3~C#4,D4~C#5,D5~C#6		
	VY846800	Rubber Contact	GH 2M OCT		A-1~C#0		08
	VY846900	Rubber Contact	GH 2M OCT		D6~C7		08

*: New Parts

RANK: Japan only