Clavinova

# CLP-115

# SERVICE MANUAL



**CLP115**

CLP115 has mostly the same specifications as CLP-110.
To check or repair CLP115, be sure to prepare the CLP-110 service manual CL 001675 with this manual.

■ **CONTENTS**


MAIN DIFFERENCES WITH CLP-110 ..... 3
SPECIFICATIONS ..... 3
PANEL LAYOUT ..... 4
WIRING ..... 5
BLOCK DIAGRAM ..... 6
DISASSEMBLY PROCEDURE ..... 7
CIRCUIT BOARDS ..... 9
TEST PROGRAM ..... 11
MIDI IMPLEMENTATION CHART ..... 13
MIDI DATA FORMAT ..... 14
OVERALL CIRCUIT DIAGRAM ..... 18
PARTS LIST



**CL** 001703

YAMAHA
HAMAMATSU, JAPAN



Copyright (c) Yamaha Corporation. All rights reserved. PDF-K302 IT ⓘ '03. 08

# IMPORTANT NOTICE

This manual has been provided for the use of authorized Yamaha Retailers and their service personnel. It has been assumed that basic service procedures inherent to the industry, and more specifically Yamaha Products, are already known and understood by the users, and have therefore not been restated.

**WARNING:** Failure to follow appropriate service and safety procedures when servicing this product may result in personal injury, destruction of expensive components and failure of the product to perform as specified. For these reasons, we advise all Yamaha product owners that all service required should be performed by an authorized Yamaha Retailer or the appointed service representative.

**IMPORTANT:** This presentation or sale of this manual to any individual or firm does not constitute authorization, certification, recognition of any applicable technical capabilities, or establish a principal-agent relationship of any form.

The data provided is believed to be accurate and applicable to the unit(s) indicated on the cover. The research engineering, and service departments of Yamaha are continually striving to improve Yamaha products. Modifications are, therefore, inevitable and changes in specification are subject to change without notice or obligation to retrofit. Should any discrepancy appear to exist, please contact the distributor's Service Division.

**WARNING:** Static discharges can destroy expensive components. Discharge any static electricity your body may have accumulated by grounding yourself to the ground bus in the unit (heavy gauge black wires connect to this bus).

**IMPORTANT:** Turn the unit OFF during disassembly and parts replacement. Recheck all work before you apply power to the unit.

# WARNING: CHEMICAL CONTENT NOTICE!

The solder used in the production of this product contains LEAD. In addition, other electrical / electronic and / or plastic (where applicable) components may also contain traces of chemicals found by the California Health and Welfare Agency (and possibly other entities) to cause cancer and / or birth defects or other reproductive harm.

DO NOT PLACE SOLDER, ELECTRICAL / ELECTRONIC OR PLASTIC COMPONENTS IN YOUR MOUTH FOR ANY REASON WHAT SO EVER!

Avoid prolonged, unprotected contact between solder and your skin! When soldering, do not inhale solder fumes or expose eyes to solder / flux vapor!

If you come in contact with solder or components located inside the enclosure of this product, wash your hands before handling food.

## IMPORTANT NOTICE FOR THE UNITED KINGDOM

### Connecting the Plug and Cord

IMPORTANT. The wires in this mains lead are coloured in accordance with the following code:

BLUE : NEUTRAL
BROWN : LIVE

As the colours of the wires in the mains lead of this apparatus may not correspond with the coloured makings identifying the terminals in your plug proceed as follows:

The wire which is coloured BLUE must be connected to the terminal which is marked with the letter N or coloured BLACK.

The wire which is coloured BROWN must be connected to the terminal which is marked with the letter L or coloured RED.

Making sure that neither core is connected to the earth terminal of the three pin plug.

(2 wires)

• This applies only to products distributed by Yamaha-Kemble Music (U.K.) Ltd.

## ■ WARNING

Components having special characteristics are marked ⚠ and must be replaced with parts having specification equal to those originally installed.

## ■ MAIN DIFFERENCES WITH CLP-110

As for electrical parts, the PEDAL circuit board is added.

| UNIT | CLP-110 | CLP115 | REMARKS |
|---|---|---|---|
| OVERALL ASSEMBLY | -- | -- | The ST board assembly is not installed.<br>The pedal box assembly and the back board set are installed. |
| MAIN UNIT SUB ASSEMBLY | (V851320) | (WB29600) | The D-JACK assembly and the end block assembly (L) are changed.<br>The PK connector is installed. |
| PEDAL BOX ASSEMBLY | Not in use | (V974350) | The unit is added. |
| PEDAL ASSEMBLY | Not in use | V0053700 | The unit is added. |
| END BLOCK ASSEMBLY (L) | (V869920) | (WB29660) | The model name logo is changed. |
| D-JACK ASSEMBLY | (V890860) | (V975480) | The D-JACK circuit board and the D-JACK angle are changed. |
| D-JACK CIRCUIT BOARD | V8910300 | V9456500 | |
| PEDAL CIRCUIT BOARD | Not in use | V9456600 | The unit is added. |
| PEDAL (SW) CIRCUIT BOARD | Not in use | V2337300 | The unit is added. |

## ■ SPECIFICATIONS

| | |
|---|---|
| **Keyboard** | 88 keys (A-1 - C7) |
| **Sound Source** | AWM Stereo Sampling |
| **Polyphony** | 32 Notes Max. |
| **Voice Selection** | 10 |
| **Effect** | Reverb |
| **Volume** | Master Volume |
| **Controls** | Dual, Metronome, Transpose |
| **Pedal** | Damper, Sostenuto, Soft |
| **Demo Songs** | 10 voice Demo Songs, 50 preset Songs |
| **Jacks/Connectors** | MIDI (IN/OUT/THRU), PHONES x 2 |
| **Main Amplifiers** | 20W x 2 |
| **Speakers** | Oval (12cm x 6cm) x 2 |
| **Dimensions (W x D x H)** | 1345mm x426mm x 815mm [52-15/16" x 16-3/4" x 32-1/16"] |
| **(with music rest)** | (1345mm x 426mm x 968mm) [53-15/16" x 16-3/4" x 38-1/8"] |
| **Weight** | 41kg (90lbs., 6oz) |
| **Power consumption** | 48W |
| **Accessories** | Owner's Manual, "50 greats for the Piano" (Music Book), Bench (included or optional depending on locale), Quick Operation Guide |

## ■ PANEL LAYOUT

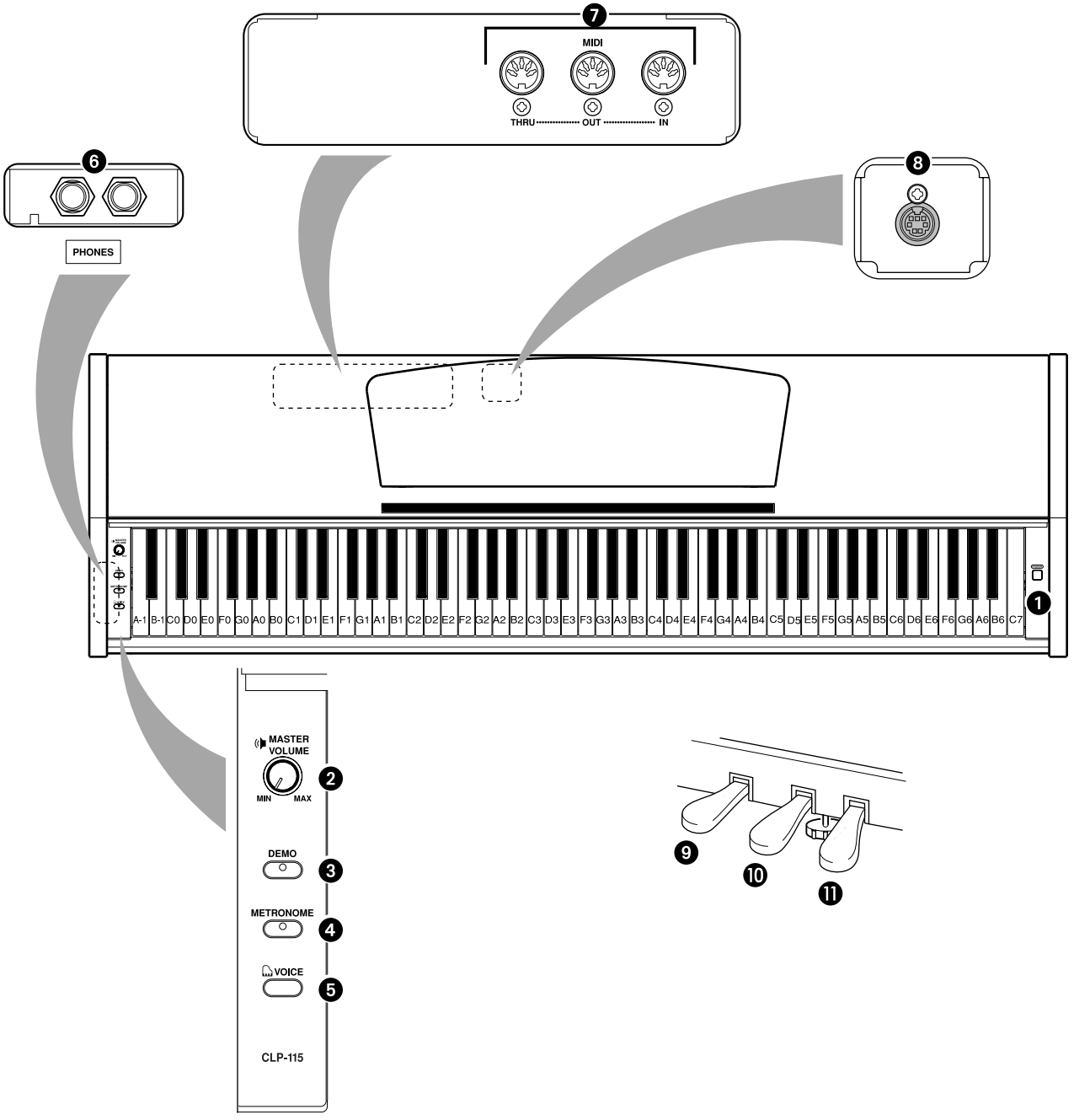


1. [POWER] button
2. [MASTER VOLUME] knob
3. [DEMO] button
4. [METRONOME] button
5. [VOICE] button
6. [PHONES] jack
7. MIDI [IN] [OUT] [THRU] jack
8. [PEDAL] jack
9. Soft (Left) Pedal
10. Sostenuto (Center) Pedal
11. Damper (Right) Pedal

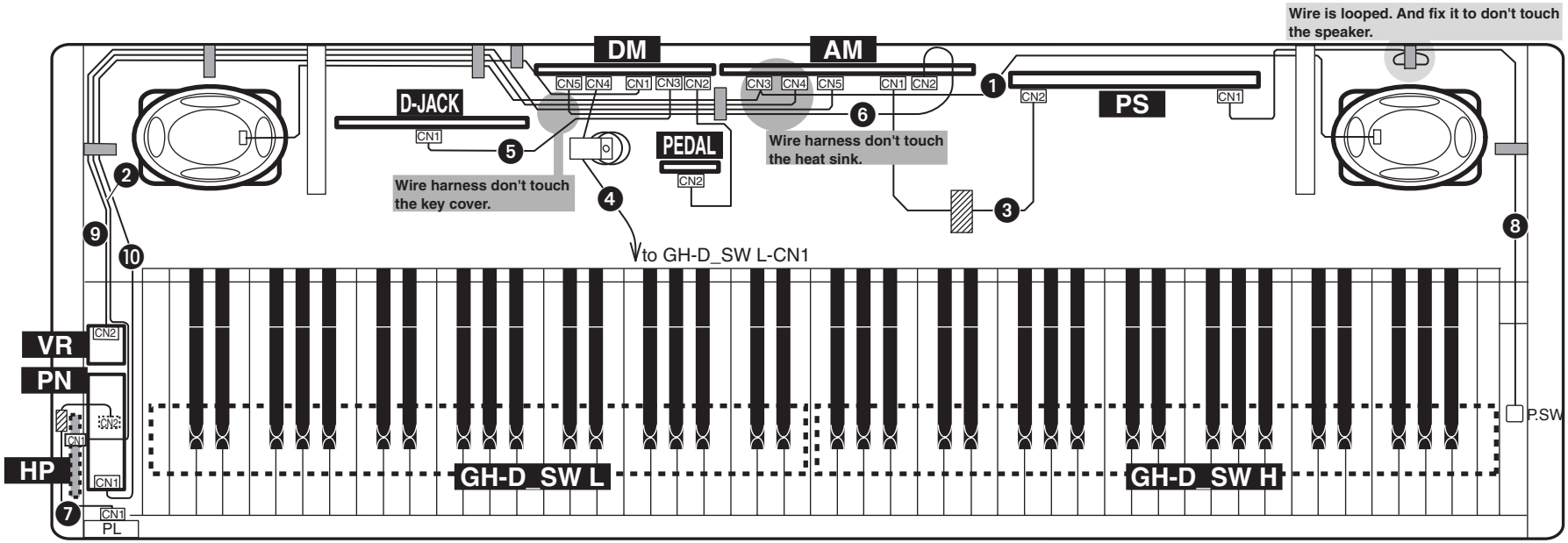


: Code Binder

: Ferrite Core

: Filament Tape (12 x 50)

: Aluminum Tape (40 x 50)

: Connector Direction

**NOTE.:** ⑩ are fixed on the back top rail by alminum tape. (U/C model only)
⑤ are fixed on the KEY BED by alminum tape. (U/C model only)

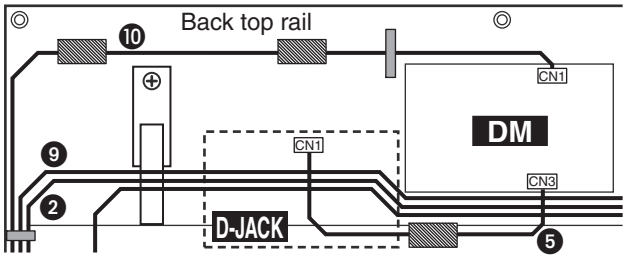


**NOTE.:** ③,⑧ wire harness shall be around as the following drawing .(U/C model only)




Rear view of PS unit

| Location | Part Number | Part Name | Destination | |
|---|---|---|---|---|
| ① | (V909110) | AMSP Wire Harness | AM-CN3 | SP Lch WH/BL<br>SP Rch RE/BL |
| ② | (V908680) | AMHP Wire Harness | AM-CN4 | HP-CN1 |
| ③ | (V004510) | PSAM Wire Harness | PS-CN2 | AM-CN1 |
| ④ | V9401000 | MK Wire Harness | DM-CN4 | GH-D_SW L-CN1 |
| ⑤ | (VJ98180) | KRD-KRD Wire Harness | DM-CN3 | D-JACK-CN1 |
| ⑥ | VK108600 | KRD-KRD Wire Harness | AM-CN2 | DM-CN5 |
| ⑦ | VK099600 | KRD-KRD Wire Harness | HP-CN2 | PL-CN1 |
| ⑧ | VS353700 | PSW Wire Harness | POWER SW | PS-CN1 |
| ⑨ | (V909180) | VOL Wire Harness | AM-CN5 | VR-CN002 |
| ⑩ | (V908660) | KRD-KRD Wire Harness | DM-CN1 | PN-CN001 |
| ⑪ | VK097800 | KRD-KRD Wire Harness | DM-CN2 | PEDAL-CN002 |

2NC-V974160-3/3⚠

# ■ BLOCK DIAGRAM

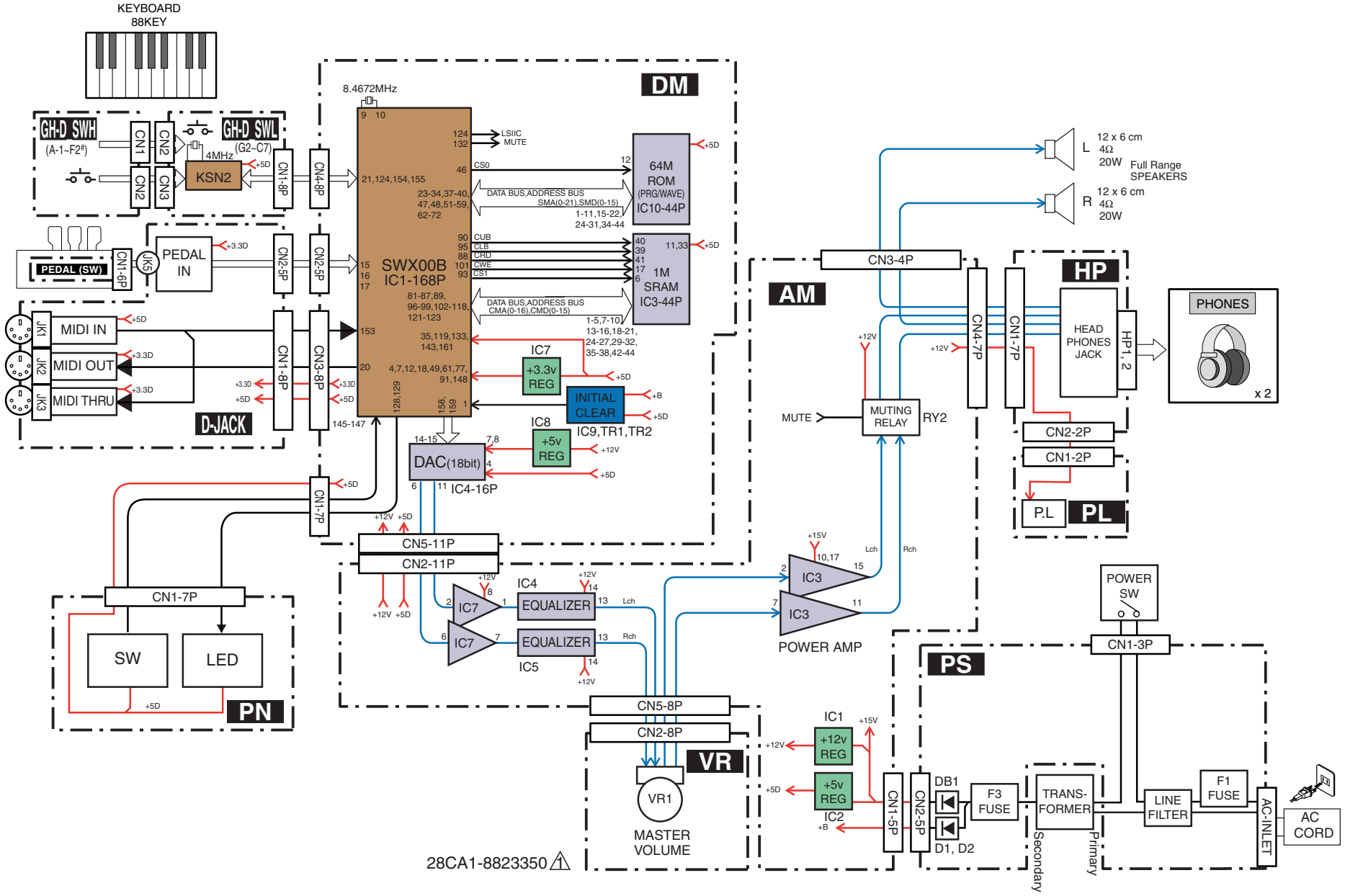

# ■ DISASSEMBLY PROCEDURE

* See the CLP-110 service manual to remove units that are not explained in the body below,

### 1. Circuit Boards and the Units in the Main Unit (Time required: about 7 min)

1-1 Remove the top board assembly. (See the CLP-110 service manual.)

1-2 Remove the following screws to remove each circuit board or unit. (Fig.1)

| Circuit Board or Unit | Screw | Quantity | Remarks |
|---|---|---|---|
| DM | 31 | 4 | |
| A Sheet Assembly | 40a | 4 | |
| D Jack Assemgly | 40b | 4 | |
| PK Connector | 40c | 2 | |
| Power Supply Unit | 103a | 5 | For all models |
| | 103b | 3 | Only for U model |
| Speaker (L, R) | 10 | 8 | |

* To remove the DM circuit board or AM sheet assembly, use a screw driver which is shorter than a clearance between the circuit board and the keyboard assembly.
When using a longer one by necessity, remove the keyboard assembly before removing these circuit boards. (See the CLP-110 service manual.)

* When connecting the speaker cables again, pay attention to polarity.

L ch: + (white), - (black)
R ch: + (red), - (black)

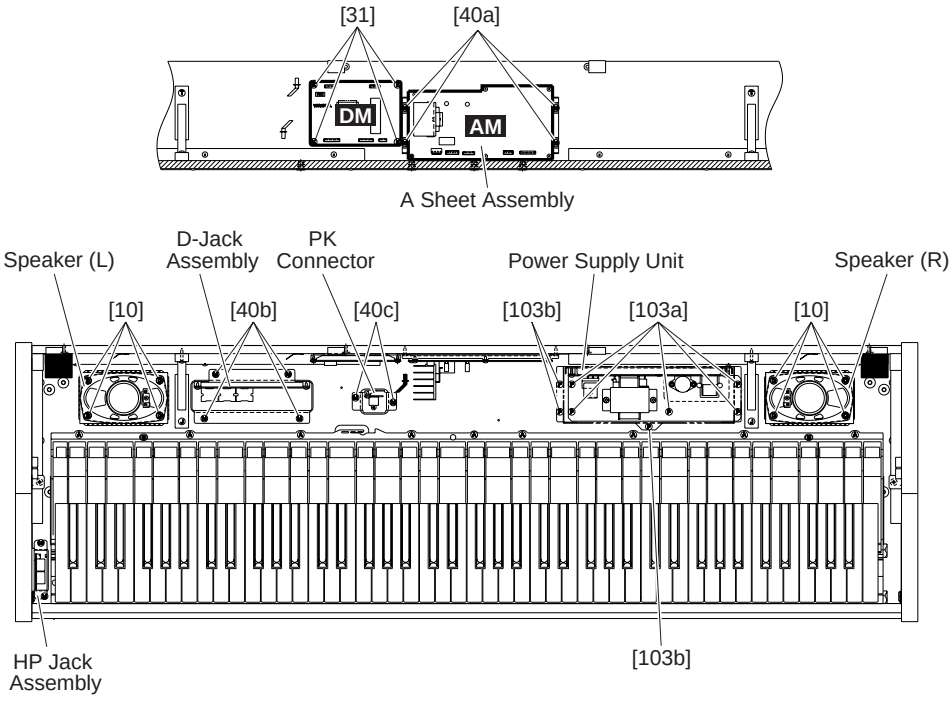


(Fig. 1)

[10]: Truss Head Tapping Screw-1 4.0X16 MFZN2Y (03747340)
[31]: Bind Head Tapping Screw-B 3.0X6 MFZN2Y (EP600130)
[40]: Bind Head Tapping Screw-1 3.5X12 MFZN2Y (EP030240)
[103]: Bind Head Tapping Screw-1 3.5X12 MFZN2Y (EP030240)

**2. Back Board (Time required: about 1 min)**

2-1 Remove the two (2) screws marked [S2] and the four (4) screws marked [S4]. The back top board can then be removed. (Fig.2)

**3. Side Board Assembly (L, R) (Time required: about 5 min)**

* For safety, this process should be done by two personnel.

3-1 Remove the back board. (See procedure 2)

3-2 Remove the main unit. (See the CLP-110 service manual.)

3-3 Remove the two (2) screws marked [S1] for each side. The side board assembly (L, R) can then be removed. (Fig.3)

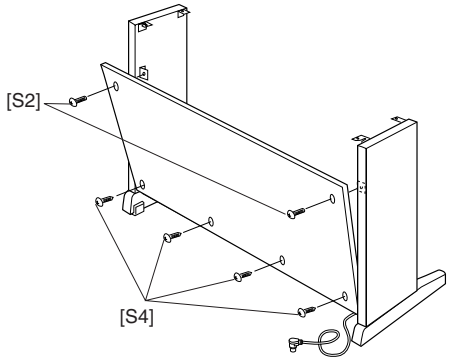


(Fig. 2)

[S2]: Truss Head Screw 4.0X12 MFZN2BL (VP367300)
[S4]: PW Head Tapping Screw-1 4.0X20 MFZN2BL (VR321000)

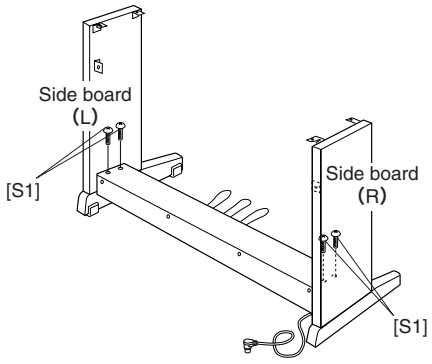


(Fig. 3)

[S1]: Truss Head Screw 6.0X20 MFZN2BL (VU711900)

**4. Pedal Box Assembly (Time required: about 4 min)**

* For safety, this process should be done by two personnel.

4-1 Remove the back board. (See procedure 2)

4-2 Remove the main unit. (See the CLP-110 service manual)

4-3 Remove the two (2) screws marked [S1] for each side. The pedal box assembly can then be removed. (Fig.3)

**5. Pedal Assembly (Time required: about 2 min)**

* For safety, this process should be done by two personnel.

5-1 Spread soft cloth on the floor and lay down the product carefully on its back. (Fig.4)

5-2 Remove the eight (8) screws marked [7]. The pedal assembly can then be removed. (Fig.5)

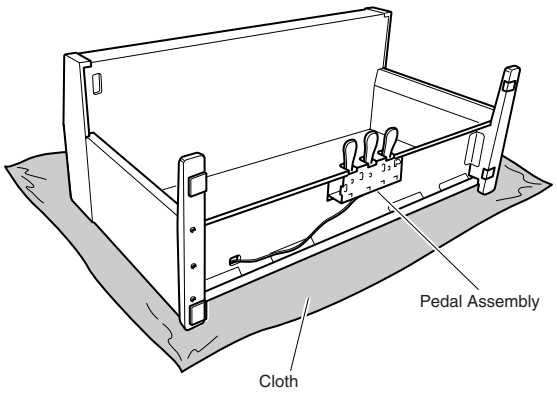


(Fig. 4)

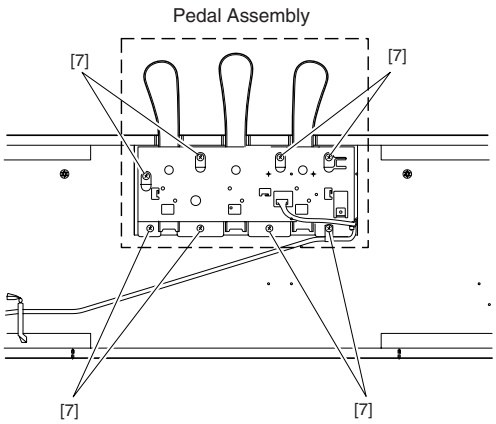


(Fig. 5)

[7]: Bind Head Tapping Screw-1 4.0X14 MFZN2Y (EP040230)

# ■ CIRCUIT BOARDS


- PEDAL Circuit Board (X2588B0) ..... 9
- PEDAL (SW) Circuit Board(XR780B0) ..... 9
- D-JACK Circuit Board (X2588B0) ..... 10


**• PEDAL Circuit Board**

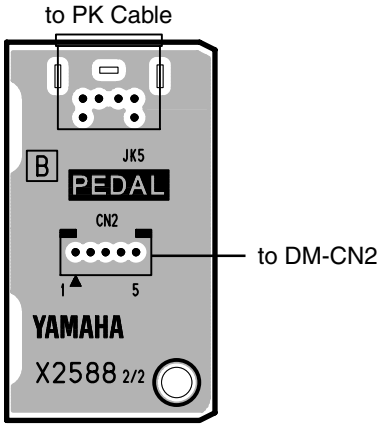


Component Side

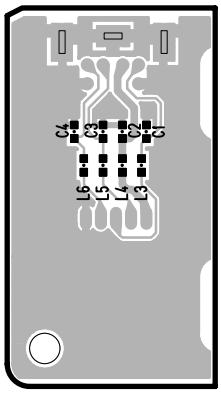

Pattern Side

**• PEDAL (SW) Circuit Board**

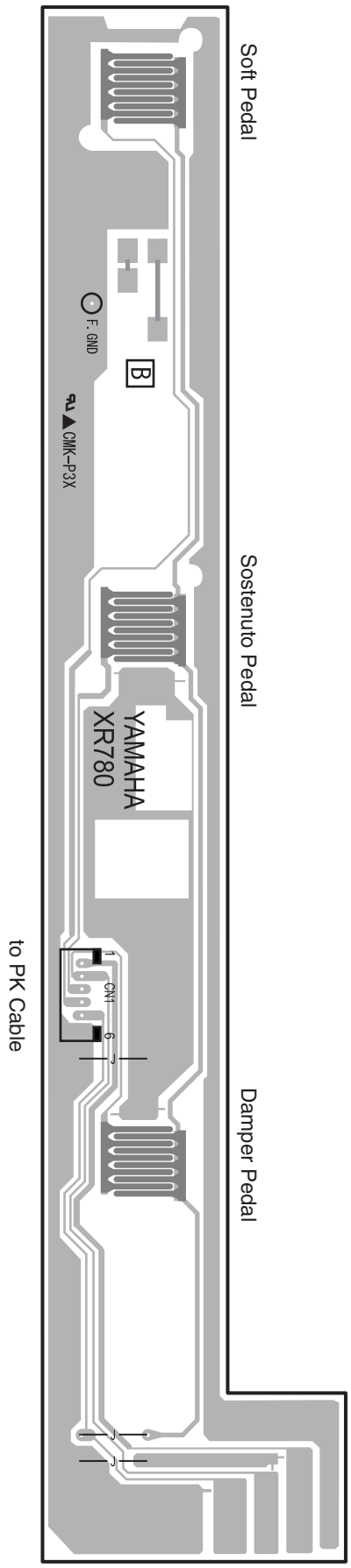


Component Side

PEDAL: 2NA-V945640
PEDAL (SW): 2NA-V233730

- **D-JACK Circuit Board**

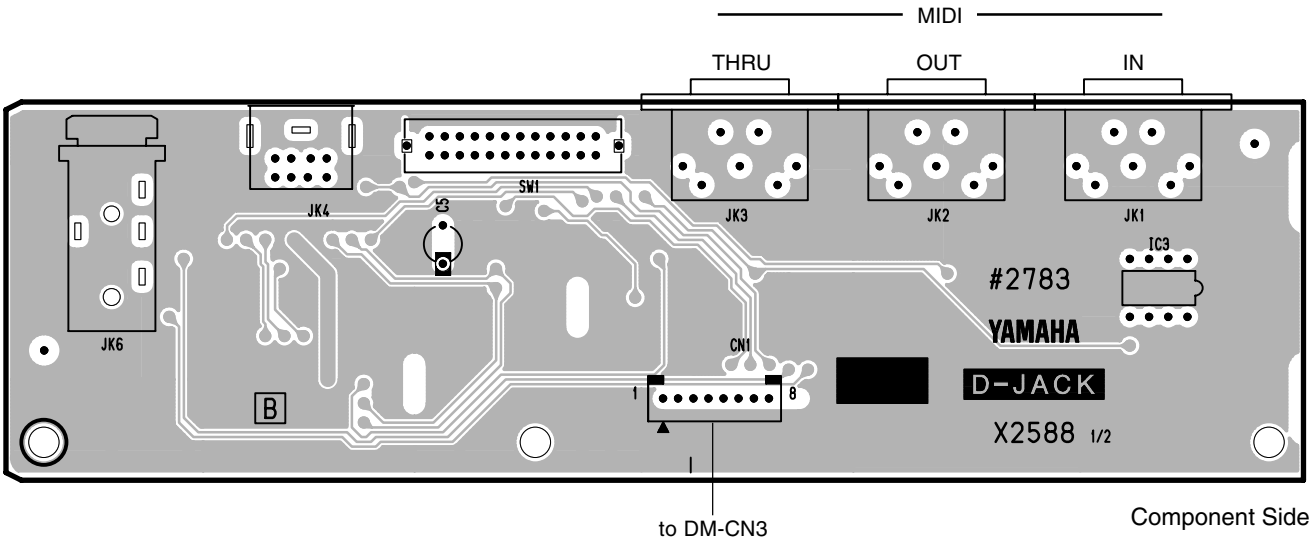


Component Side

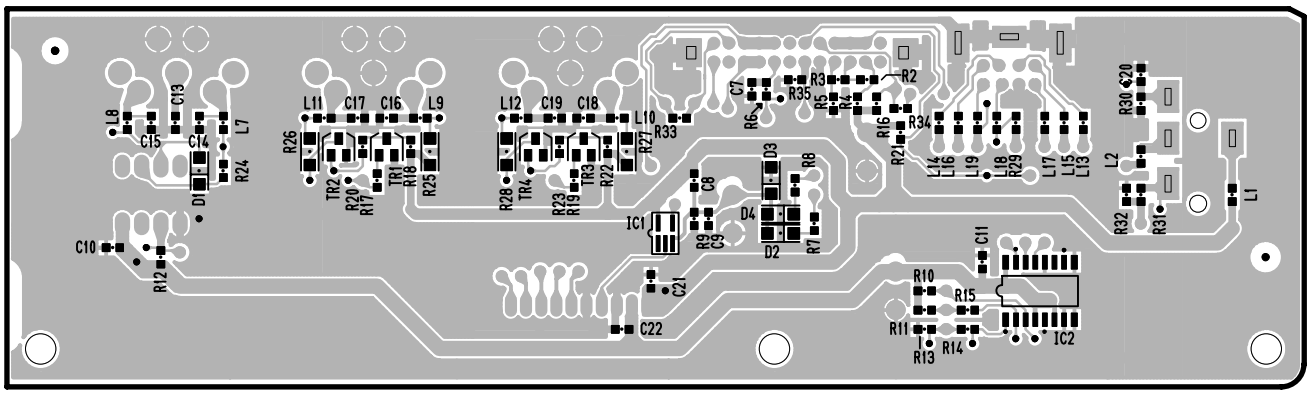

Pattern Side

2NA-V945640

# ■ TEST PROGRAM

## 1. Preparation

- To check the unit, following jigs are required.
  Level meter (with JIS-C Filter)
  Frequency counter
  MIDI cable

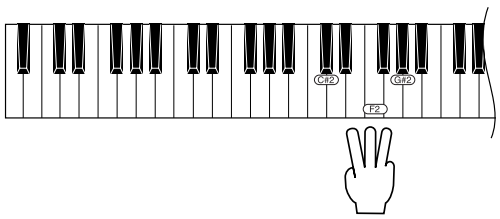


(Fig.1)

- Set each control as follows.
  MASTER VOLUME: Max
  Connect the mesurement plug to the HEADPHONES jack. (33 ohm)

## 2. To enter test program

Turn on the power with (C2#), (F2), (G2#) keys pressed and held. (Fig.1)
When the test program starts to run, sine wave of A3 sounds. Press any key to stop the sound.

## 3. To proceed the test

See the table 1 for each test item.
Press the corresponding key to select and execute each test.

**Table 1 Test Items**

| No. | Key | Item | Test Function and Judgment Criteria |
|---|---|---|---|
| 1 | C1-A1, C2-A2 | ROM Version | Confirm that the sine wave of C4 sounds.<br>C1-A1 :integer (0-9) <example><br>C2-A2 :decimal (0-9) ver. 1.0=[C1#,C2] |
| 2 | C3 | ROM 1 | If the result is OK, the sine wave of C4 sounds.<br>If the result is NG, the sine wave of C2 sounds. |
| 3 | C3# | RAM 1 | If the result is OK, the sine wave of C4 sounds.<br>If the result is NG, the sine wave of C2 sounds. |
| 11 | D3 | Tone Generator | The sine waves from F3 to C6 automatically sounds in sequence.<br>Confirm that no abnomal sound or noise is generated. |
| 13 | D3# | Pitch | Confirm that the sine wave of 440.0±0.2 Hz sounds. |
| 14 | E3 | OUTPUT LEVEL R | The sine wave of C5 sounds.<br>Confirm that the output level of each jack is as follows. (Unit [dBm])<br>PHONES L : R - 40 dB or less<br>PHONES R : - 3.0 dB |
| 15 | F3 | OUTPUT LEVEL L | The sine wave of C5 sounds.<br>Confirm that the output level of each jack is as follows. (Unit [dBm])<br>PHONES L : -1.5 dB<br>PHONES R : L - 40 dB or less |
| 16 | F3# | EQ Low | The sine wave of C1 sounds.<br>Confirm that the output level of each jack is as follows. (Unit [dBm])<br>PHONES L, R : +4.0 |
| 17 | G3 | EQ Mid | The sine wave of C4 sounds.<br>Confirm that the output level of each jack is as follows. (Unit [dBm])<br>PHONES L, R : -1.5 |

**Table 1 Test Items**

| No. | Key | Item | Test Function and Judgment Criteria |
|---|---|---|---|
| 18 | G3# | EQ High | The sine wave of C6 sounds.<br>Confirm that the output level of each jack is as follows. (Unit [dBm])<br>PHONES L, R : 0 |
| 19 | A3 | D/A noise | Press any key and confirm that no D/A noise is generated.<br>* Before proceeding to next test, press C7 key to exit the D/A noise test. |
| 20 | A3# | SW, LED | Confirm that all LEDs light up. |
| 31 | B3 | Soft Pedal | Confirm that the sine wave of C3 sounds when the soft pedal is depressed and that C4 sounds when the pedal is released. |
| 32 | C4 | Sostenuto Pedal | Confirm that the sine wave of C3 sounds when the sostenuto pedal is depressed and that C4 sounds when the pedal is released. |
| 33 | C4# | Damper Pedal | Confirm that the sine wave of C3 sounds when the damper pedal is depressed and that C4 sounds when the pedal is released. |
| 37 | D4 | MIDI | Connect the [MIDI IN] and [MIDI OUT] jack via MIDI cable and confirm that the sine wave of C4 sounds. |
| 41 | D4# | ROM Check 2 | When the result is OK, the sine wave of C4 sounds.<br>When the result is NG, the sine wave of C2 sounds.<br>It takes about 45 seconds until this test is finished. |
| 42 | E4 | RAM Check 2 | When the result is OK, the sine wave of C4 sounds.<br>When the result is NG, the sine wave of C2 sounds. |
| 48 | C7 | TEST MODE Exit | Exit the test program and return to play mode. |

# ■ MIDI IMPLEMENTATION CHART

YAMAHA [Clavinova] Date: 7 Mar, 2003
Model: CLP-115 MIDI Implementation Chart Version: 1.0

| Function | | | Transmitted | Recognized | Remarks |
|---|---|---|---|---|---|
| Basic Channel | Default<br>Changed | | 1<br>1 - 16 | 1<br>1 - 16 | |
| Mode | Default<br>Messages<br>Altered | | 3<br>X<br>********** | 1 *1<br>X<br>X | Poly Mode only |
| Note Number | : True voice | | 9 - 120<br>********** | 0 - 127<br>0 - 127 | |
| Velocity | Note ON<br>Note OFF | | O 9nH, v=1 - 127<br>O 9nH, v=0 | O 9nH, v=1 - 127<br>O 9nH, v=0 or 8nH | |
| After Touch | Key's<br>Ch's | | X<br>X | X<br>X | |
| Pitch Bend | | | X | X | |
| Control Change | | 0, 32 | O | O | Bank Select |
| | | 7 | O | O | Volume |
| | | 11 | X | O | Expression |
| | | 64 | O | O | Damper |
| | | 66 | O | O | Sostenuto |
| | | 67 | O | O | Soft pedal |
| | | 91 | O | O | Reverb Depth |
| | | 94 | X | O | Effect Depth |
| Program Change | : True # | | O<br>********** | O | |
| System Exclusive | | | O | O | |
| Common | : Song Pos.<br>: Song Sel.<br>: Tune | | X<br>X<br>X | X<br>X<br>X | |
| System Real Time | : Clock<br>: Commands | | O<br>O | O<br>O | |
| Aux Messages | : All Sound Off<br>: Reset All Cntrls<br>: Local ON/OFF<br>: All Notes OFF<br>: Active Sense<br>: Reset | | O<br>O<br>X<br>O<br>O<br>X | O (120, 126, 127)<br>O (121)<br>O (122)<br>O (123 - 125)<br>O<br>X | |
| Notes : *1 = Recieve Mode is always multi timbre and Poly mode. | | | | | |

Mode 1: OMNI ON, POLY Mode 2: OMNI ON, MONO O : Yes
Mode 3: OMNI OFF, POLY Mode 4: OMNI OFF, MONO X : No

# ■ MIDI DATA FORMAT

If you're already very familiar with MIDI, or are using a computer to control your music hardware with computer-generated MIDI messages, the data provided in this section can help you to control the CLP-115.

## 1. NOTE ON/OFF

Data format: [9nH] -> [kk] -> [vv]

9nH = Note ON/OFF event (n = channel number)
kk = Note number (Transmit: 09H ~ 78H = A-2 ~ C8 / Receive: 00H ~ 7FH = C-2 ~ G8)*
vv = Velocity (Key ON = 01H ~ 7FH, Key OFF = 00H)

Data format: [8nH] -> [kk] -> [vv] (reception only)

8nH = Note OFF event (n = channel number)
kk = Note number: 00H ~ 7FH = C-2 ~ G8
vv = Velocity

* If received value exceeds the supported range for the selected voice, the note is adjusted by the necessary number of octaves.

## 2. CONTROL CHANGE

Data format: [BnH] -> [cc] -> [vv]

BnH = Control change (n = channel number)
cc = Control number
vv = Data Range

**(1) Bank Select**

| ccH | Parameter | Data Range (vvH) |
|---|---|---|
| 00H | Bank Select MSB | 00H:Normal |
| 20H | Bank Select LSB | 00H...7FH |

Bank selection processing does not occur until receipt of next Program Change message.

**(2) Main Volume (reception only)**

| ccH | Parameter | Data Range (vvH) |
|---|---|---|
| 07H | Volume MSB | 00H...7FH |

**(3) Expression (reception only)**

| ccH | Parameter | Data Range (vvH) |
|---|---|---|
| 0BH | Expression MSB | 00H...7FH |

**(4) Damper**

| ccH | Parameter | Data Range (vvH) |
|---|---|---|
| 40H | Damper MSB | 00H...7FH |

**(5) Sostenuto**

| ccH | Parameter | Data Range (vvH) |
|---|---|---|
| 42H | Sostenuto | 00H-3FH:off, 40H-7FH:on |

**(6) Soft Pedal**

| ccH | Parameter | Data Range (vvH) |
|---|---|---|
| 43H | Soft Pedal | 00H-3FH:off, 40H-7FH:on |

**(7) Effect1 Depth (Reverb Send Level)**

| ccH | Parameter | Data Range (vvH) |
|---|---|---|
| 5BH | Effect1 Depth | 00H...7FH |

Adjusts the reverb send level.

**(8) Effect4 Depth (Variation Effect Send Level) (reception only)**

| ccH | Parameter | Data Range (vvH) |
|---|---|---|
| 5EH | Effect4 Depth | 00H...7FH |

## 3. MODE MESSAGES

Data format: [BnH] -> [cc] -> [vv]

BnH = Control event (n = channel number)
cc = Control number
vv = Data Range

**(1) All Sound Off**

| ccH | Parameter | Data Range (vvH) |
|---|---|---|
| 78H | All Sound Off | 00H |

**(2) Reset All Controllers**

| ccH | Parameter | Data Range (vvH) |
|---|---|---|
| 79H | Reset All Controllers | 00H |

Resets controllers as follows.

| Controller | Value |
|---|---|
| Expression | 127 (max) |
| Damper Pedal | 0 (off) |
| Sostenuto | 0 (off) |
| Soft Pedal | 0 (off) |

**(3) Local Control (reception only)**

| ccH | Parameter | Data Range (vvH) |
|---|---|---|
| 7AH | Local Control | 00H (off), 7FH (on) |

**(4) All Notes Off**

| ccH | Parameter | Data Range (vvH) |
|---|---|---|
| 7BH | All Notes Off | 00H |

Switches OFF all the notes that are currently ON on the specified channel. Any notes being held by the damper or sostenuto pedal will continue to sound until the pedal is released.

**(5) Omni Off (reception only)**

| ccH | Parameter | Data Range (vvH) |
|---|---|---|
| 7CH | Omni Off | 00H |

Same processing as for All Notes Off.

**(6) Omni On (reception only)**

| ccH | Parameter | Data Range (vvH) |
|---|---|---|
| 7DH | Omni On | 00H |

Same processing as for All Notes Off.

**(7) Mono (reception only)**

| ccH | Parameter | Data Range (vvH) |
|---|---|---|
| 7EH | Mono | 00H |

Same processing as for All Sound Off.

**(8) Poly (reception only)**

| ccH | Parameter | Data Range (vvH) |
|---|---|---|
| 7FH | Poly | 00H |

Same processing as for All Sound Off.

- When control change reception is turned OFF, control change data will not be transmitted or received except for Bank Select and Mode messages.
- Local on/off, OMNI on/off are not transmitted. (The appropriate note off number is supplied with "All Note Off" transmission).
- When a voice bank MSB/LSB is received, the number is stored in the internal buffer regardless of the received order, then the stored value is used to select the appropriate voice when a program change message is received.
- The Multi-timbre and Poly modes are always active. No change occurs when OMNI ON, OMNI OFF, MONO, or POLY mode messages are received.

## 4. PROGRAM CHANGE

Data format: [CnH] -> [ppH]

CnH = Program event (n = channel number)
ppH = Program change number
P.C.#=Program Change number

| Voice Name | MSB | LSB | P.C.# |
|---|---|---|---|
| Grand Piano 1 | 0 | 122 | 1 |
| Grand Piano 2 | 0 | 112 | 1 |
| E.Piano 1 | 0 | 122 | 6 |
| E.Piano 2 | 0 | 122 | 5 |
| Harpsichord 1 | 0 | 122 | 7 |
| Harpsichord 2 | 0 | 123 | 7 |
| Vibraphone | 0 | 122 | 12 |
| Church Organ 1 | 0 | 123 | 20 |
| Church Organ 2 | 0 | 122 | 20 |
| Strings | 0 | 122 | 49 |

- When you specify a program change as a number in the range of 0-127, specify a number that is one less than the program number listed above. For example, to specify program number 1, you would specify program change 0.
- When program change reception is turned OFF, no program change data is transmitted or received. Also, Bank MSB/LSB is not transmitted or received.

## 5. SYSTEM REALTIME MESSAGES

[rrH]
F8H: Timing clock
FAH: Start
FCH: Stop
FEH: Active sensing

| Data | Transmission | Reception |
|---|---|---|
| F8H | Transmitted every 96 clocks | Received as 96-clock tempo timing when MIDI clock is set to External. |
| FAH | Song start | Song start<br>Not received when the MIDI clock is set to Internal. |
| FCH | Song stop | Song stop<br>Not received when the MIDI clock is set to Internal. |
| FEH | Transmitted every 200 milliseconds | If a signal is not received via MIDI for more than 400 milliseconds, the same processing will take place for All Sound Off, All Notes Off and Reset All Controllers as when those signals are received. |

- Caution: If an error occurs during MIDI reception, the Damper, Sostenuto, and Soft effects for all channels are turned off and an All Note Off occurs.

## 6. SYSTEM EXCLUSIVE MESSAGES (Universal System Exclusive)

**(1) Universal Realtime Message**

Data format: [F0H] -> [7FH] -> [XnH] -> [04H] -> [01H] -> [llH] -> [mmH] -> [F7H]

**MIDI Master Volume**

- Simultaneously changes the volume of all channels.
- When a MIDI master volume message is received, the volume only has affect on the MIDI receive channel, not the panel master volume.

F0H = Exclusive status
7FH = Universal Realtime
7FH = ID of target device
04H = Sub-ID #1=Device Control Message
01H = Sub-ID #2=Master Volume
*ll*H = Volume LSB
mmH = Volume MSB
F7H = End of Exclusive

**or**

F0H = Exclusive status
7FH = Universal Realtime
XnH = When n is received n=0~F, whichever is received.
X = don't care
04H = Sub-ID #1=Device Control Message
01H = Sub-ID #2=Master Volume
*ll*H = Volume LSB
mmH = Volume MSB
F7H = End of Exclusive

**(2) Universal Non-Realtime Message (GM On)**

**General MIDI Mode On**

Data format: [F0H] -> [7EH] -> [XnH] -> [09H] -> [01H] -> [F7H]

F0H = Exclusive status
7EH = Universal Non-Realtime
7FH = ID of target device
09H = Sub-ID #1=General MIDI Message
01H = Sub-ID #2=General MIDI On
F7H = End of Exclusive

**or**

F0H = Exclusive status
7EH = Universal Non-Realtime
XnH = When received, n=0~F.
X = don't care
09H = Sub-ID #1=General MIDI Message
01H = Sub-ID #2=General MIDI On
F7H = End of Exclusive

When the General MIDI mode ON message is received, the MIDI system will be reset to its default settings.
This message requires approximately 50ms to execute, so sufficient time should be allowed before the next message is sent.

## 7. SYSTEM EXCLUSIVE MESSAGES (XG Standard)

**(1) XG Native Parameter Change**

Data format: [F0H] -> [43H] -> [1nH] -> [4CH] -> [hhH] -> [mmH] -> [*ll*H] -> [ddH] -> [F7H]

F0H = Exclusive status
43H = YAMAHA ID
1nH = When received, n=0~F.
When transmitted, n=0.
4CH = Model ID of XG
hhH = Address High
mmH = Address Mid
*ll*H = Address Low
ddH = Data
|
F7H = End of Exclusive

Data size must match parameter size (2 or 4 bytes).
When the XG System On message is received, the MIDI system will be reset to its default settings.
The message requires approximately 50ms to execute, so sufficient time should be allowed before the next message is sent.

**(2) XG Native Bulk Data (reception only)**

Data format: [F0H] -> [43H] -> [0nH] -> [4CH] -> [aaH] -> [bbH] -> [hhH] -> [mmH] -> [*ll*H] ->[ddH] ->...-> [ccH] -> [F7H]

F0H = Exclusive status
43H = YAMAHA ID
0nH = When received, n=0~F.
When transmitted, n=0.
4CH = Model ID of XG
aaH = ByteCount
bbH = ByteCount
hhH = Address High
mmH = Address Mid
*ll*H = Address Low
ddH = Data
| |
| |
ccH = Check sum
F7H = End of Exclusive

- Receipt of the XG SYSTEM ON message causes reinitialization of relevant parameters and Control Change values. Allow sufficient time for processing to execute (about 50 msec) before sending the CLP-115 another message.
- XG Native Parameter Change message may contain two or four bytes of parameter data (depending on the parameter size).
- For information about the Address and Byte Count values, refer to Table 1 below. Note that the table's Total Size value gives the size of a bulk block. Only the top address of the block (00H, 00H, 00H) is valid as a bulk data address.

## 8. SYSTEM EXCLUSIVE MESSAGES (Clavinova MIDI Format)

Data format: [F0H] -> [43H] -> [73H] -> [xxH] -> [nnH] -> [F7H]

F0H = Exclusive status
43H = Yamaha ID
73H = Clavinova ID
01H = Product ID (CLP common)
**or**
7F= Extended Product ID
24H = Product ID
nnH = Substatus
nn Control
02H Internal MIDI clock
03H External MIDI clock
06H Bulk Data (the bulk data follows 06H)
F7H = End of Exclusive

* When nn=02H or 03H, Clavinova common ID (01H) is rec-ognized as well as 75H.

## 9. SYSTEM EXCLUSIVE MESSAGES (Special Control)

Data format: [F0H] -> [43H] -> [73H] -> [66H] -> [11H] -> [0nH] -> [ccH] -> [vvH] -> [F7H]

F0H = Exclusive status
43H = Yamaha ID
73H = Clavinova ID
7FH = Extended Product ID
24H = Product ID
11H = Special control
0nH = Control MIDI change (n=channel number)
cc = Control number
vv = Value
F7H = End of Exclusive

| Control | Channel | ccH | vvH |
|---|---|---|---|
| Metronome | Always 00H | 1BH | 00H : off<br>01H : –<br>02H : 2/4<br>03H : 3/4<br>04H : 4/4<br>05H : 5/4<br>06H : 6/4<br>7FH : No accent |
| Channel Detune | ch: 00H-0FH | 43H | (Sets the Detune value for each channel)<br>00H-7FH |
| Voice Reserve | ch: 00H-0FH | 45H | 00H : Reserve off<br>7FH : on* |

* When Volume, Expression is received for Reserve On, they will be effective from the next Key On. Reserve Off is normal.

## 10. SYSTEM EXCLUSIVE MESSAGES (Others)

Data format: [F0H] -> [43H] -> [1nH] -> [27H] -> [30H] -> [00H] -> [00H] -> [mmH] -> [*ll*H] -> [ccH] -> [F7H]

Master Tuning (XG and last message priority) simultaneously changes the pitch of all channels.
F0H = Exclusive Status
43H = Yamaha ID
1nH = When received, n=0~F.
When transmitted, n=0.
27H = Model ID of TG100
30H = Sub ID
00H =
00H =
mmH = Master Tune MSB
*ll*H = Master Tune LSB
ccH = don't care (under 7FH)
F7H = End of Exclusive

**<Table 1>**

**MIDI Parameter Change table (SYSTEM)**

| Address (H) | Size (H) | Data (H) | Parameter | Description | Default value (H) |
|---|---|---|---|---|---|
| 00 00 00 | 4 | 020C - 05F4(*1) | MASTER TUNE | -50 - +50[cent] | 00 04 00 00 |
| 01 | | | | 1st bit 3 - 0 bit 15 - 12 | 400 |
| 02 | | | | 2nd bit 3 - 0 bit 11 - 8 | |
| 03 | | | | 3rd bit 3 - 0 bit 7 - 4 | |
| | | | | 4th bit 3 - 0 bit 3 - 0 | |
| 04 | 1 | 00 - 7F | MASTER VOLUME | 0 - 127 | 7F |
| 05 | 1 | — | — | | |
| 06 | 1 | 34 - 4C(*2) | TRANSPOSE | -12 - +12[semitones] | 40 |
| 7E | | 00 | XG SYSTEM ON | 00=XG system ON | |
| 7F | | 00 | RESET ALL PARAMETERS | 00=ON (receive only) | |

TOTAL SIZE 07

*1:Values lo wer than 020CH select -50 cents . Values higher than 05F4H select +50 cents .

*2:Values from 28H through 33H are inter preted as -12 through -1. Values from 4DH through 58H are inter preted as +1 through +12.

**<Table 2>**

**MIDI Parameter Change table (EFFECT 1)**

Refer to the "Effect MIDI Map"for a complete list of Reverb, Chorus and Variation type numbers .

| Address (H) | Size (H) | Data (H) | Parameter | Description | Default value (H) |
|---|---|---|---|---|---|
| 02 01 00 | 2 | 00-7F | REVERB TYPE MSB | Refer to Eff ect MIDI Map | 01(=HALL1) |
| | | 00-7F | REVERB TYPE LSB | 00 : basic type | 00 |
| 02 01 40 | 2 | 00-7F | VARIATION TYPE MSB | Refer to Eff ect MIDI Map | 00(=Effect off) |
| | | 00-7F | VARIATION TYPE LSB | 00 : basic type | 00 |

•"VARIATION"refers to the EFFECT on the panel.

**<Table 3>**

**MIDI Parameter Change table (MULTI PART)**

| Address (H) | Size (H) | Data (H) | Parameter | Description | Default value (H) |
|---|---|---|---|---|---|
| 08 nn 11 | 1 | 00 - 7F | DRY LEVEL | 0 - 127 | 7F |

nn = Part Number

## • Effect MIDI Map

**REVERB**

| | MSB | LSB |
|---|---|---|
| ROOM | 02H | 10H |
| HALL 1 | 01H | 10H |
| HALL 2 | 01H | 11H |
| STAGE | 03H | 10H |

**EFFECT**

| | MSB | LSB |
|---|---|---|
| CHORUS | 42H | 10H |
| PHASER | 48H | 10H |
| TREMOLO | 46H | 10H |
| DELAY | 05H | 10H |

# ■ OVERALL CIRCUIT DIAGRAM (D-JACK, PEDAL, PEDAL (SW))

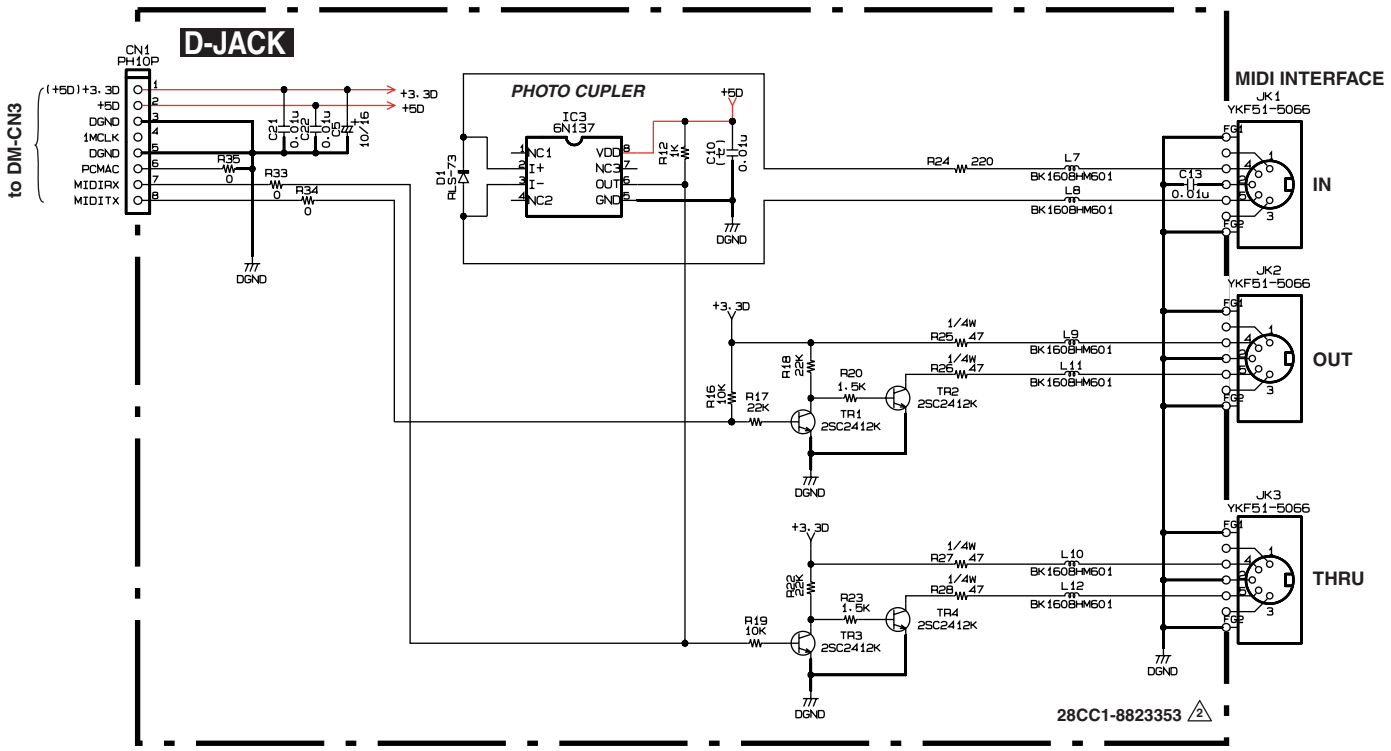


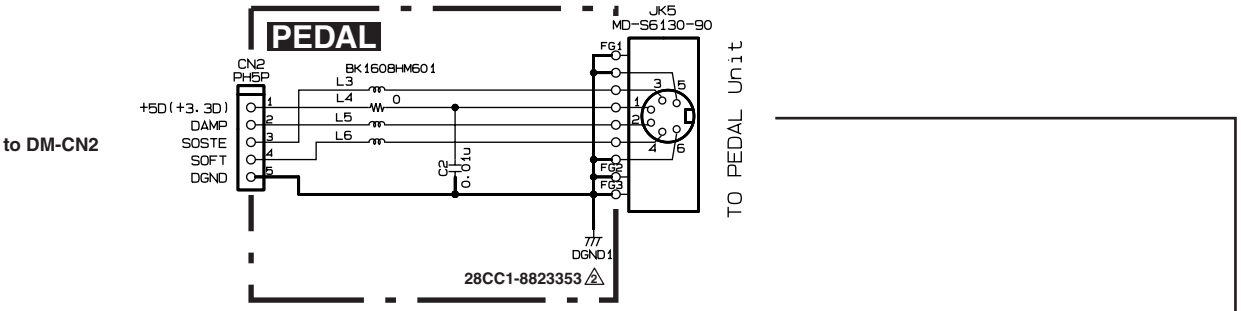


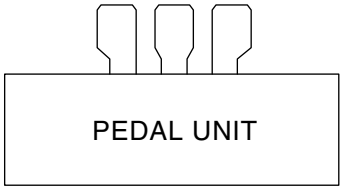


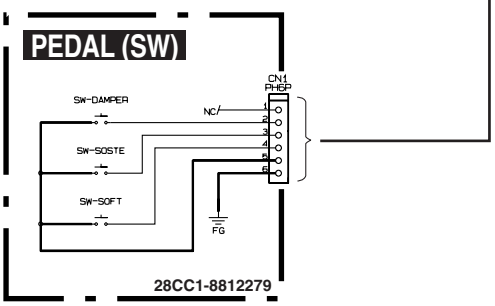


(セ): Ceramic Capacitor

**Note: See parts list for details of citcuit baord component parts.**

Clavinova®

# CLP115
# PARTS LIST

■ **CONTENTS**


OVERALL ASSEMBLY ..... 2
MAIN UNIT ..... 4
SIDE BOARD ASSEMBLY ..... 8
PEDAL BOX ASSEMBLY ..... 9
PEDAL ASSEMBLY ..... 10
TOP BOARD ASSEMBLY ..... 11
MUSIC REST ASSEMBLY ..... 12
SIDE COVER ASSEMBLY ..... 13
END BLOCK ASSEMBLY ..... 14
PANEL ASSEMBLY ..... 15
KEY COVER ASSEMBLY ..... 16
POWER SUPPLY UNIT ..... 17
KEYBOARD ASSEMBLY ..... 18
A SHEET ASSEMBLY ..... 20
D-JACK ASSEMBLY ..... 20
HEADPHONES JACK ASSEMBLY. ..... 21
BENCH ..... 22
ELECTRICAL PARTS ..... 23


Note) DESTINATION ABBREVIATIONS

| | | | |
|---|---|---|---|
| A: | Australian model | M: | South African model |
| B: | British model | O: | Chinese model |
| C: | Canadian model | Q: | South-east Asia model |
| D: | German model | T: | Taiwan model |
| E: | European model | U: | U.S.A. model |
| F: | French model | V: | General export model (110V) |
| H: | North European model | W: | General export model (220V) |
| I: | Indonesian model | N,X: | General export model |
| J: | Japanese model | Y: | Export model |
| K: | Korean model | | |

■ WARNING

Components having special characteristics are marked ⚠ and must be replaced with parts having specifications equal to those originally installed.

■ The numbers in “QTY” shows quantities for each unit.
■ The parts with “--” in “Part No.” are not available as spare parts.
■ The second letter of the shaded ( ) part number is I, not one.
■ The second letter of the shaded ( ) part number is O, not zero.
■ The mark “}” in the REMARKS column indicates that these parts are interchangeable.

## ■ OVERALL ASSEMBLY

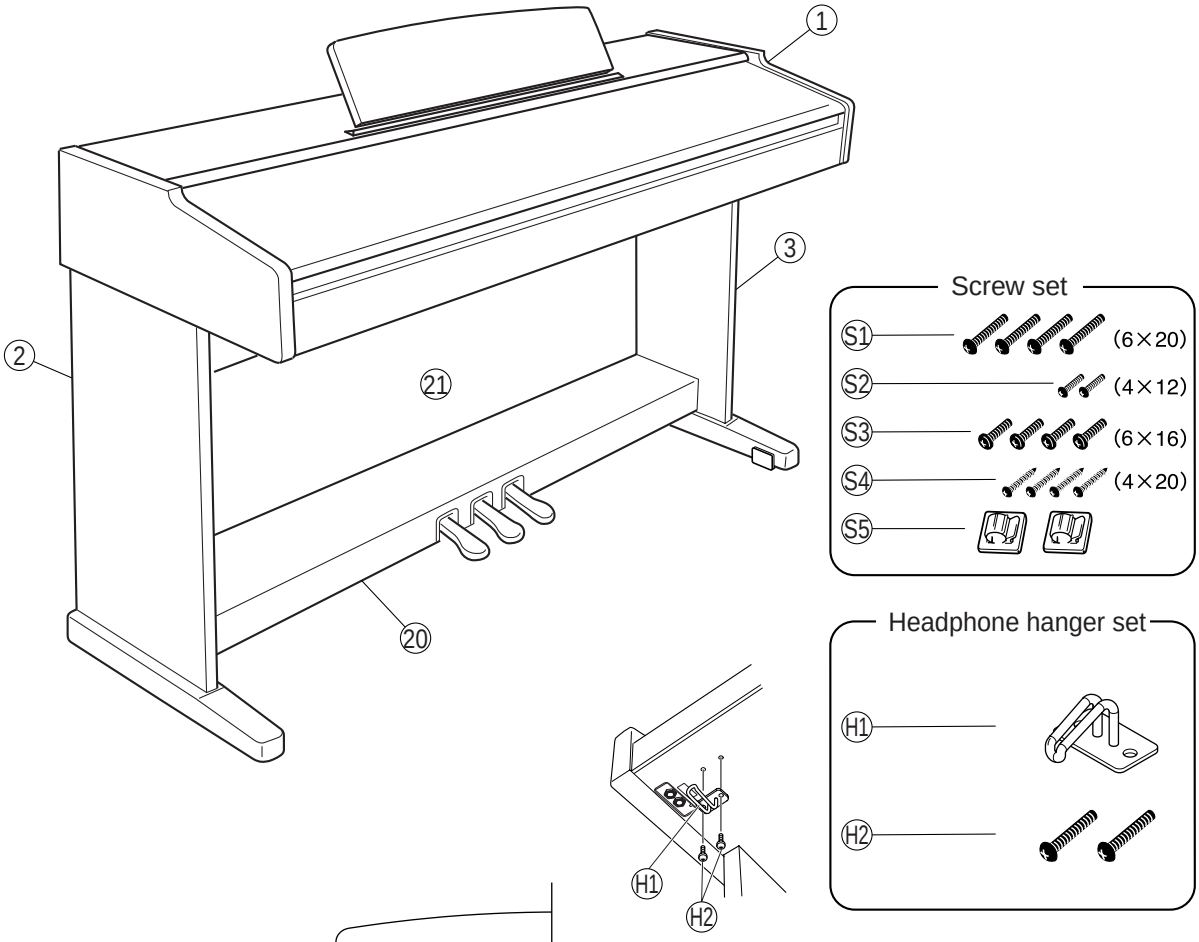


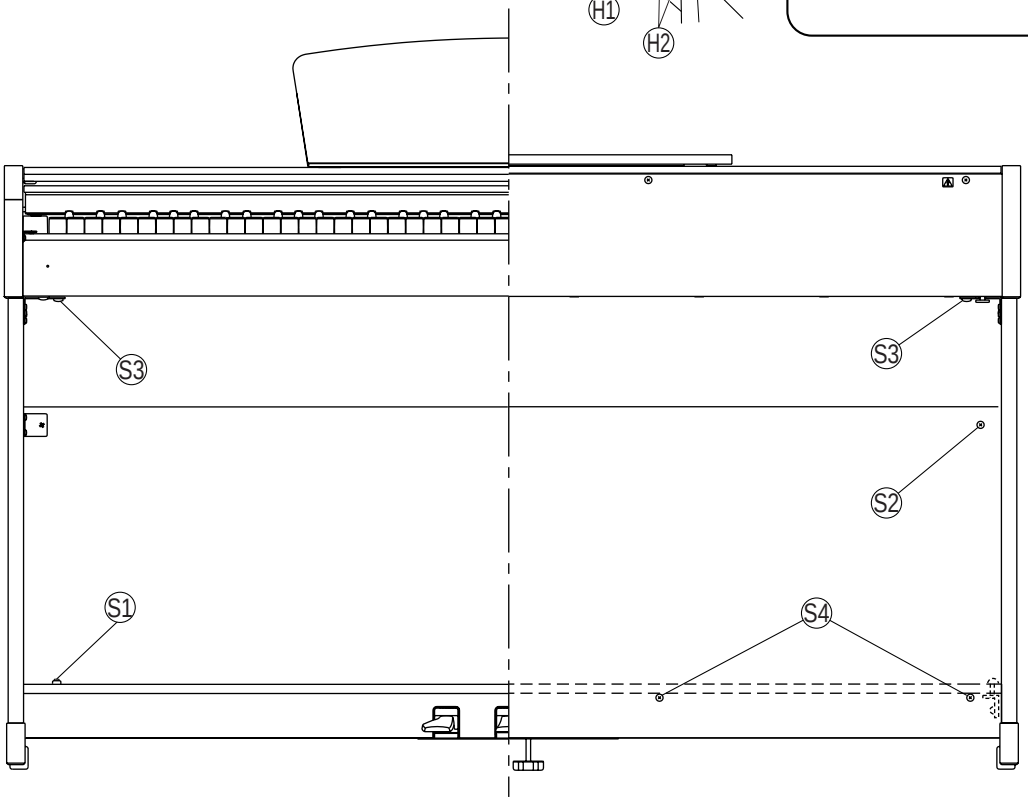


• **Front view** • **Rear view**

| REF NO. | PART NO. | DESCRIPTION | | 部品名 | REMARKS | QTY | RANK |
|---|---|---|---|---|---|---|---|
| | | OVERALL ASSEMBLY | | 総組立 | CLP-115 (WB29420) | | |
| 1 | -- | Main Unit | | メインユニット | U (WB29570) | | |
| 1 | -- | Main Unit | | メインユニット | E,B (WB29580) | | |
| 1 | -- | Main Unit | | メインユニット | N (WB29590) | | |
| 2 | V9742300 | Side Board Assembly L | LEFT | 側板Ａｓｓ’ｙ（Ｌ） | | | 18 |
| 3 | V9742400 | Side Board Assembly R | RIGHT | 側板Ａｓｓ’ｙ（Ｒ） | | | 18 |
| 20 | -- | Pedal Box Assembly | | ペダルＢｏｘＡｓｓ’ｙ | (V974350) | | |
| 21 | V9744200 | Back Board Set | | 裏板セット | | | 11 |
| | | | | | | | |
| | | ACCESSORIES | | 付属品 | | | |
| | V685400 | Screw Set | | ネジセット | | | 04 |
| S1 | VU711900 | Truss Head Screw | 6.0X20 MFZN2BL | ＋トラス小ネジ | | 4 | 01 |
| S2 | VP367300 | Truss Head Screw | 4.0X12 MFZN2BL | ＋トラス小ネジ | | 2 | 01 |
| S3 | EG360020 | Bind Head Screw | 6.0X16 MFZN2BL | ＋バインド小ネジ | | 4 | 01 |
| S4 | VR321000 | PW Head Tapping Screw-1 | 4.0X20 MFZN2BL | ＋ＰＷＨＴＰ　１種 | | 4 | 01 |
| S5 | VR410300 | Cord Clamp Set | | コードクランプセット | | | 03 |
| S5a | VP592100 | Cord Clamper | DKN-5B(VHB) | ＮＫクランプ | | 2 | 03 |
| ⚠ | V2917000 | AC Cord Set | UC 2P 7A 2.44m | 電源コードセット | U | | 06 |
| ⚠ | V2917100 | AC Cord Set | E 2P 2.5m 2.5A | 電源コードセット | E,N | | 05 |
| ⚠ | VT015800 | AC Cord Set | U 2P 2.44m 7A | 電源コードセット | U | | 06 |
| ⚠ | VT015900 | AC Cord Set | E 2P 2.5m | 電源コードセット | E,N | | 05 |
| ⚠ | VT016000 | AC Cord Set | B 2P 2.5m | 電源コードセット | B | | 08 |
| | -- | Bench | BC-100DR | 同梱品セット椅子 | U,N (V553140) | | |
| | V8740600 | Headphone Hanger Set | | ヘッドホンハンガーセット | | | 07 |
| H1 | V8972600 | Headphone Hanger | | ヘッドホンハンガー | | | 04 |
| H2 | VT196400 | Truss Head Screw | 4.0X10 MFZN2BL | ＋トラス小ネジ | | 2 | 01 |
| | WA174600 | Back Toe Set | #2800 E/F/S | バックトウセット | U | | 05 |
| B1 | EP030580 | Bind Head Tapping Screw-1 | 3.5X20 MF2N2BL | ＋バインドＴＰ１種 | | 2 | 01 |
| B2 | EP030250 | Bind Head Tapping Screw-1 | 3.5X14 MF2N2BL | ＋バインドＴＰ１種 | | 2 | 01 |
| | VK726100 | Connector | CCT-5902-0701 | ＡＣアダプタ | N | | 03 |
| | | | | | | | |
| | | JIGS | | 工具 | | | |
| | TX000670 | Rod | | ロッド | | | 99 |

*: New Parts **（新規部品）**

RANK: Japan only

# ■ MAIN UNIT

• **Rear view**

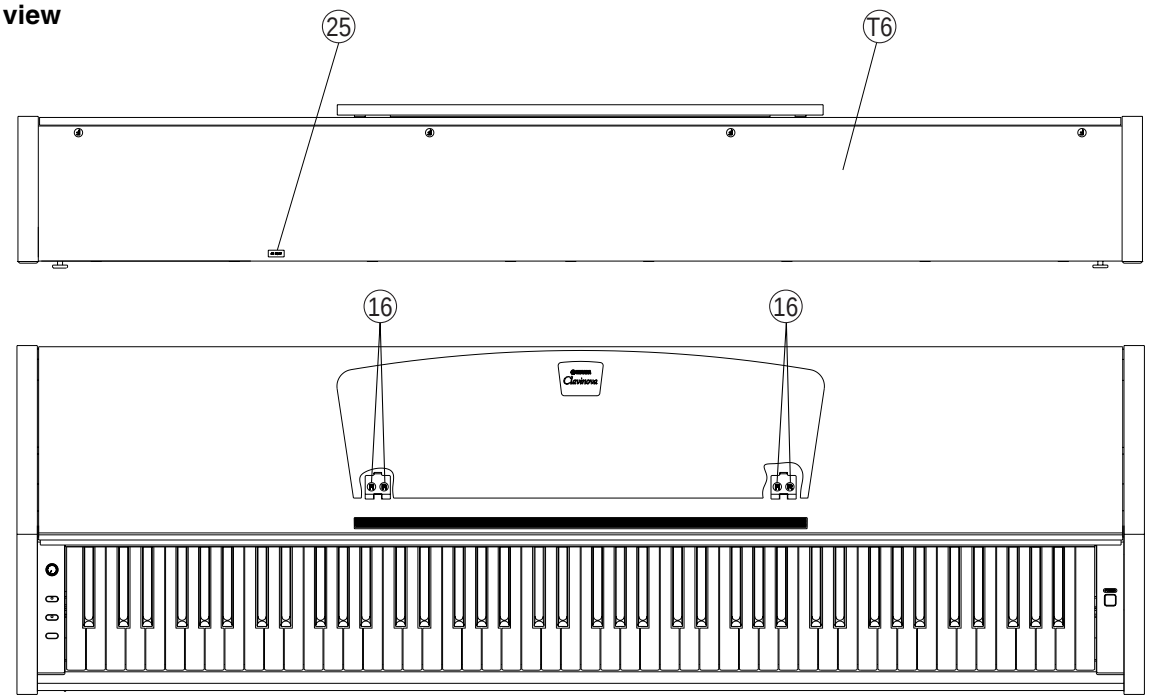


• **Top view 1**

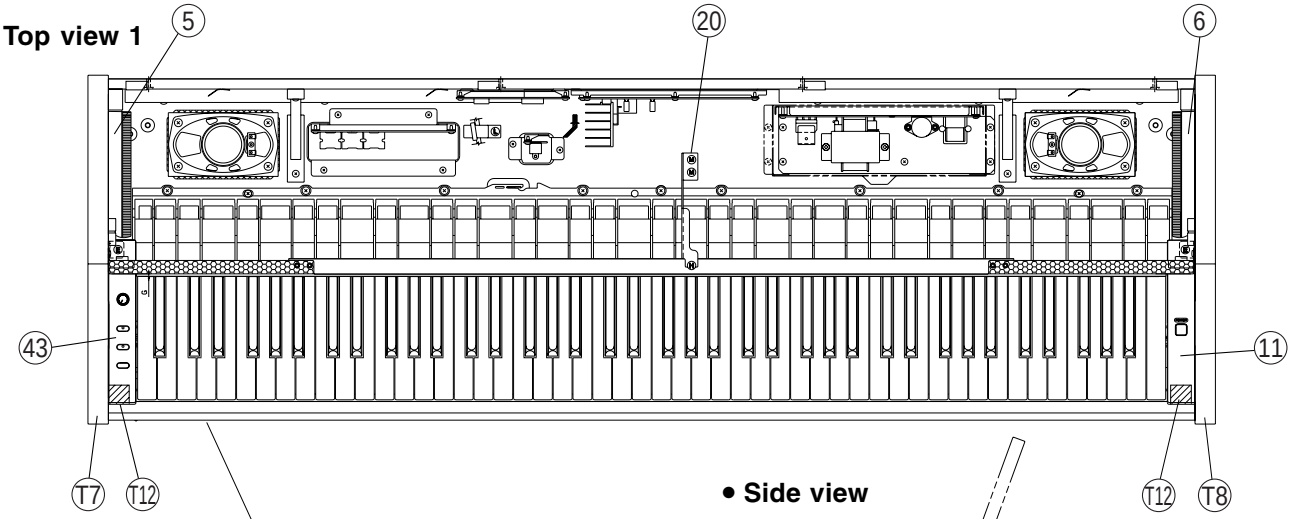


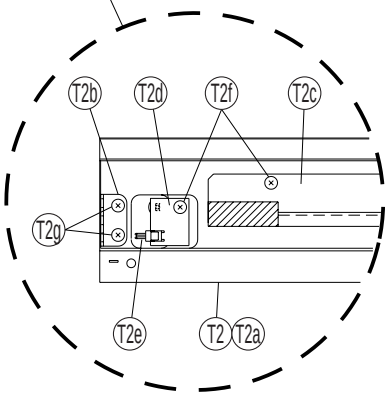


• **Side view**

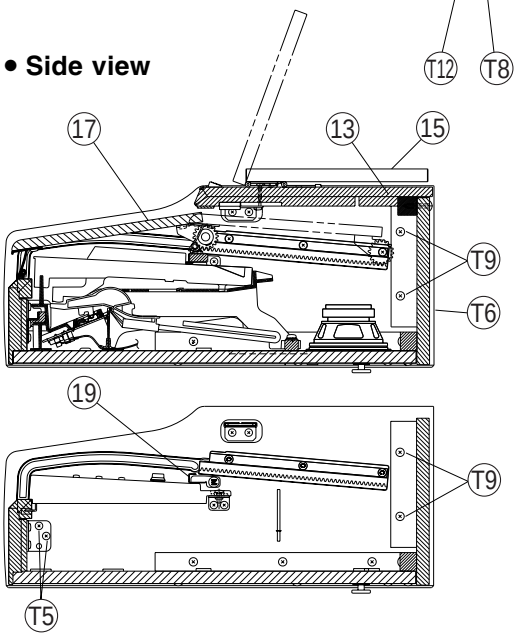

• **Bottom view**

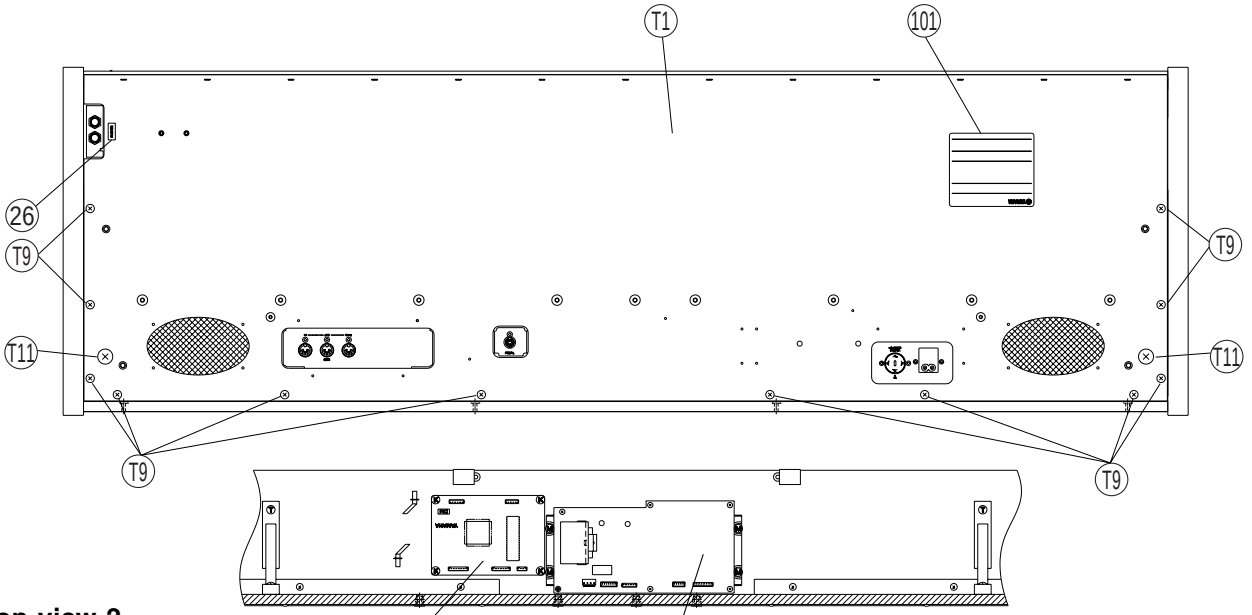


• **Top view 2**

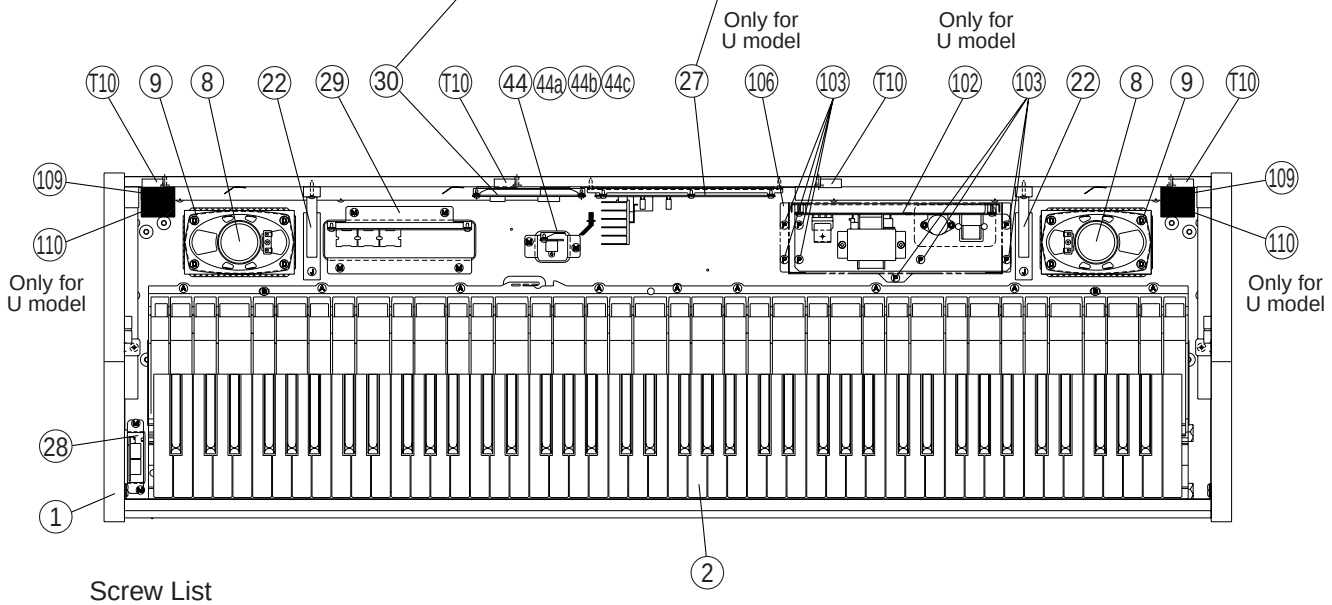


Screw List

| Ref. No | Screw | Part Name, Part Number | Quantity |
|---|---|---|---|
| 3 | Ⓐ | Pan Head Screw (VV040700) | 9 |
| 4 | Ⓑ | Bind Head Tapping Screw-1 (EP040230) | 2 |
| 7 | Ⓒ | Bind Head Tapping Screw-1 (EP030470) | 6 |
| 10 | Ⓓ | Truss Head Tapping Screw-1 (03747340) | 8 |
| 12 | Ⓔ | Bind Head Tapping Screw-B (EP640130) | 2 |
| 14 | Ⓕ | Truss Head Tapping Screw-1 (EN640160) | 4 |
| 16 | Ⓣ | Bind Head tapping Screw-1 (EP030310) | 4 |
| 21 | Ⓗ | Bind Head Screw (03753500) | 1 |
| 23 | Ⓡ | Truss Head Tapping Screw-1 (EN630260) | 2 |
| 24 | Ⓙ | Truss Head Screw (VL445800) | 2 |
| 31 | Ⓚ | Bind Head Tapping Screw-B (EP600130) | 4 |
| 39 | Ⓛ | Truss Head Tapping Screw-1 (EN630230) | 1 |
| 40 | Ⓜ | Bind Head Tapping Screw-1 (EP030240) | 16 |

| REF NO. | PART NO. | DESCRIPTION | | 部品名 | REMARKS | QTY | RANK |
|---|---|---|---|---|---|---|---|
| | | MAIN UNIT | | メインユニット | CLP-115 | | |
| | -- | Main Unit | | メインユニット | U (WB29570) | | |
| | -- | Main Unit | | メインユニット | E (WB29580) | | |
| | -- | Main Unit | | メインユニット | N (WB29590) | | |
| | -- | Main Unit Sub Assembly | | 共通部品構成 | (WB29600) | | |
| 101 | -- | Name Plate | | 銘板 | U (WB29610) | | |
| 101 | -- | Name Plate | | 銘板 | N (WB29640) | | |
| 101 | -- | Name Plate | | 銘板 | E (WB29620) | | |
| 102 | V0010400 | Power Supply Unit | | 電源ユニット（E） | E | | 14 |
| 102 | V0010500 | Power Supply Unit | | 電源ユニット（N） | N | | 22 |
| 102 | V0010300 | Power Supply Unit | | 電源ユニット（U） | U | | 14 |
| 103 | EP030240 | Bind Head Tapping Screw-1 | 3.5X12 MFZN2Y | ＋バインドＴＰ１種 | E,N | 5 | 01 |
| 103 | EP030240 | Bind Head Tapping Screw-1 | 3.5X12 MFZN2Y | ＋バインドＴＰ１種 | U | 8 | 01 |
| 106 | V9559700 | Power Supply Cover Ass'y | | 電源カバーＡｓｓ’ｙ | U | | |
| 106a | V2035900 | Cover, Power Supply Unit | | 電源ユニットカバー | U | | 07 |
| 106b | V9559800 | Felt | 235X75XT1 | フェルト | U | | 03 |
| 107 | VB951400 | Graphic Mark | MKX-5 UL | グラフィックマーク | U | | 03 |
| 107 | -- | Graphic Mark | YMMA | グラフィックマーク | U (V846210) | | |
| 109 | VP834600 | Adhesive Tape | 12X50 | 粘着テープ | E,N | | 02 |
| 110 | -- | Conductive Adhesive Tape | AL-40 40X20m | 導電性粘着テープ | U (WA53090) | | |
| | | | | | | | |
| | -- | Main Unit Sub Assembly | | 共通部品構成 | (WB29600) | | |
| 1 | -- | Top Unit Assembly | | 上部集成 | (WB29650) | | |
| 2 | VZ705400 | Keyboard Assembly | A88 K6 | ＧＨＤ鍵盤Ａｓｓ’ｙ | | | 63 |
| 3 | VV040700 | Pan Head Screw | 5.0X25 MFZN2Y PW | ＋ナベ小ネジ | | 9 | 01 |
| 4 | EP040230 | Bind Head Tapping Screw-1 | 4.0X14 MFZN2Y | ＋バインドＴＰ１種 | | 2 | 01 |
| 5 | V8518500 | Rack L | LEFT | ラック成形品（Ｌ） | | | 02 |
| 6 | V8518600 | Rack R | RIGHT | ラック成形品（Ｒ） | | | 02 |
| 7 | EP030470 | Bind Head Tapping Screw-1 | 3.5X20 MFZN2Y | ＋バインドＴＰ１種 | | 6 | 01 |
| 8 | X0657A00 | Speaker | 13.0cm 4ohm 10W | スピーカ | | 2 | 06 |
| 9 | -- | Speaker Cushion | | スピーカークッション | (V861680) | 2 | |
| 10 | 03747340 | Truss Head Tapping Screw-1 | 4.0X16 MFZN2Y | ＋トラスＴＰ１種 | | 8 | |
| 11 | V8733300 | End Block Assembly | RIGHT | 拍子木（Ｒ）Ａｓｓ’ｙ | | | 08 |
| 12 | EP640130 | Bind Head Tapping Screw-B | 4.0X10 MFZN2Y | ＋バインドＢタイト | | 2 | 01 |
| 13 | V8513300 | Top Board Assembly | | 屋根Ａｓｓ’ｙ | | | 10 |
| 14 | EN640160 | Truss Head Tapping Screw-1 | 4.0X25 MFZN2BL | ＋トラスＴＰ１種 | | 4 | 01 |
| 15 | V8514200 | Music Rest Assembly | | 譜面板Ａｓｓ’ｙ | | | 16 |
| 16 | EP030310 | Bind Head Tapping Screw-1 | 3.0X16 MFZN2BL | ＋バインドＴＰ１種 | | 4 | 01 |
| 17 | V8516800 | Key Cover Assembly | | スライド蓋Ａｓｓ’ｙ | | | 15 |
| 19 | V8614600 | Panel Assembly | | パネルＡｓｓ’ｙ | | | 07 |
| 20 | -- | Angle Z | | アングルＺ | (V907120) | | |
| 21 | 03753500 | Bind Head Screw | 3.0X8 MFZN2Y | ＋バインド小ネジ | | | 01 |
| 22 | -- | Partition Assembly | | 仕切りＡｓｓ’ｙ | (V908210) | 2 | |
| 23 | EN630260 | Truss Head Tapping Screw-1 | 3.5X20 MFZN2Y | ＋トラスＴＰ１種 | | 2 | 01 |
| * 24 | WB676000 | Truss Head Screw | 4.0X23 MFZN2Y | ＋トラス小ネジ | | 2 | 01 |
| 25 | VT501000 | Label | | ＡＣ ＩＮＬＥＴラベル | | | 03 |
| 26 | -- | Label, PHONES | | ＰＨＯＮＥＳラベル | (VS47810) | | |
| 27 | -- | A Sheet Assembly | | Ａシートアッセンブリ | (V907410) | | |
| 28 | -- | Headphones Jack Assembly | | ＨＰジャックＡｓｓ’ｙ | (V969120) | | |
| 29 | -- | D-Jack Assembly | | Ｄジャックアッセンブリ | (V975480) | | |
| 30 | V8910100 | Circuit Board | DM | ＤＭシート | | | 20 |
| 31 | EP600130 | Bind Head Tapping Screw-B | 3.0X6 MFZN2Y | ＋バインドＢタイト | | 4 | 01 |
| 33 | VK108600 | Connector Assembly | KRD-KRD 11P-350 | ＫＲＤ－ＫＲＤ束線 | | | |
| 34 | V9401000 | Connector Assembly | MK | ＭＫ束線 | | | |
| 35 | VK099600 | Connector Assembly | KRD-KRD 2P-150 | ＫＲＤ－ＫＲＤ束線 | | | 02 |
| 36 | -- | Connector Assembly | AMSP | ＡＭＳＰ束線 | (V909110) | | |
| 37 | -- | Connector Assembly | AMHP | ＡＭＨＰ束線 | (V908680) | | |
| 38 | -- | Connector Assembly | PS | 電源束線 | (V004510) | | |
| 39 | EN630230 | Truss Head Tapping Screw-1 | 3.5X14 MFZN2Y | ＋トラスＴＰ１種 | | | 01 |
| 40 | EP030240 | Bind Head Tapping Screw-1 | 3.5X12 MFZN2Y | ＋バインドＴＰ１種 | | 16 | 01 |
| 42 | VP834600 | Adhesive Tape | 12X50 | 粘着テープ | | 2 | 02 |
| 43 | -- | End Block Assembly | LEFT | 拍子木（Ｌ）Ａｓｓ’ｙ | (WB29660) | | |
| 44 | -- | PK Connector | | ＰＫコネクタ | (V975520) | | |
| 44a | V4980600 | Plate | BL-PRINT | ペダル接続金具印刷品 | | | 05 |
| 44b | V9456600 | Circuit Board | PEDAL | ＰＥＤＡＬシート | (V945640) | | 03 |
| 44c | EP600190 | Bind Head Tapping Screw-B | 3.0X8 MFZN2BL | ＋バインドＢタイト | | 2 | 01 |
| 45 | VK097800 | Connector Assembly | KRD-KRD 5P-100 | ＫＲＤ－ＫＲＤ束線 | | | 02 |
| 46 | -- | Connector Assembly | KRD-KRD 8P-250 | ＫＲＤ－ＫＲＤ束線 | (VJ98180) | | |
| 47 | -- | Artificial Leather | 40X20X0.8 | 人工皮革 | (WB95300) | 3 | |
| 48 | CB069250 | Cord Holder | BK-1 | インシュロックタイ | | | 01 |

*: New Parts **（新規部品）**

RANK: Japan only

| REF NO. | PART NO. | DESCRIPTION | | 部品名 | REMARKS | QTY | RANK |
|---|---|---|---|---|---|---|---|
| 49 | -- | Adhesive Tape | AL-40 40X20M | 導電性粘着テープ | (WA53090) | | |
| | | | | | | | |
| | -- | Top Unit Assembly | | 上部集成 | (WB29650) | | |
| | AAX41330 | Keybed&F.Rail Assembly | (V975300+V907300) | 棚板口棒Ａｓｓ’ｙ | | 9 | |
| T1 | -- | Keybed Assembly | | 棚板集成 | (V975300) | 6 | 01 |
| T1a | VA127400 | Nut | 5.0X12 B MFZN2BL | 鬼目ナット | | 2 | 01 |
| T1b | V6008700 | Nut | 6 X12.5 B MFZN2BL | 鬼目ナット | | 2 | 01 |
| T1c | V9001100 | Nut | 4X12.5 I | 鬼目ナット | | | 01 |
| T1d | VA789400 | Nut | 4X11.5 B MFZN2BL | 鬼目ナット | | | |
| T2 | -- | Front Rail Assembly | | 口棒Ａｓｓ’ｙ | (V907300) | 2 | |
| T2a | -- | Front Rail | | 口棒 | (V907310) | | |
| T2b | V5263500 | Angle, K | 1.6 L | アングルＫ | | | |
| T2c | V5130600 | Holder Assembly, Keyboard | | 鍵盤前金具Ａｓｓ’ｙ | | | 03 |
| T2d | VN637600 | Circuit Board | PL(YCJ) | ＰＬシート | (VN63740) | | 03 |
| T2d | VU659100 | Circuit Board | PL(YMMA) | ＰＬシート | (VU65900) | 7 | 02 |
| T2e | VK099600 | Connector Assembly | KRD-KRD 2P-150 | ＫＲＤ－ＫＲＤ束線 | | 4 | 01 |
| T2f | EP030240 | Bind Head Tapping Screw-1 | 3.5X12 MFZN2Y | ＋バインドＴＰ１種 | | 4 | 01 |
| T2g | EP030190 | Bind Head Tapping Screw-1 | 3.5X16 MFZN2Y | ＋バインドＴＰ１種 | | | 01 |
| T5 | EP030190 | Bind Head Tapping Screw-1 | 3.5X16 MFZN2Y | ＋バインドＴＰ１種 | | | 08 |
| T6 | V9073500 | Back Top Board Assembly | | 背面框Ａｓｓ’ｙ | | | 09 |
| T7 | V8517300 | Side Cover Assembly | LEFT | 腕木Ａｓｓ’ｙ（Ｌ） | | 16 | 08 |
| T8 | V8517500 | Side Cover Assembly | RIGHT | 腕木Ａｓｓ’ｙ（Ｒ） | | 4 | 01 |
| T9 | EN630080 | Truss Head Tapping Screw-1 | 3.5X25 MFZN2Y | ＋トラスＴＰ　１種 | | 2 | |
| T10 | -- | Felt | 25X25X1 | フェルト | (V591600) | | 03 |
| T11 | VN887900 | Guide Screw | 6X14 | ガイドスクリュー | | | |
| T12 | -- | Conductive Adhesive Tape | AL-40 40X20m | 導電性粘着テープ | (WA53090) | | |

*: New Parts（新規部品）　　RANK: Japan only

# ■ SIDE BOARD ASSEMBLY (L, R)

***This figure shows a side board assembly (L).**

**• Front view**

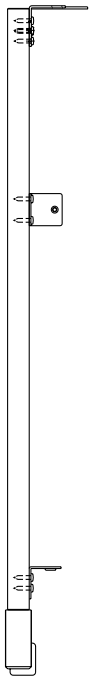

**• Side view**

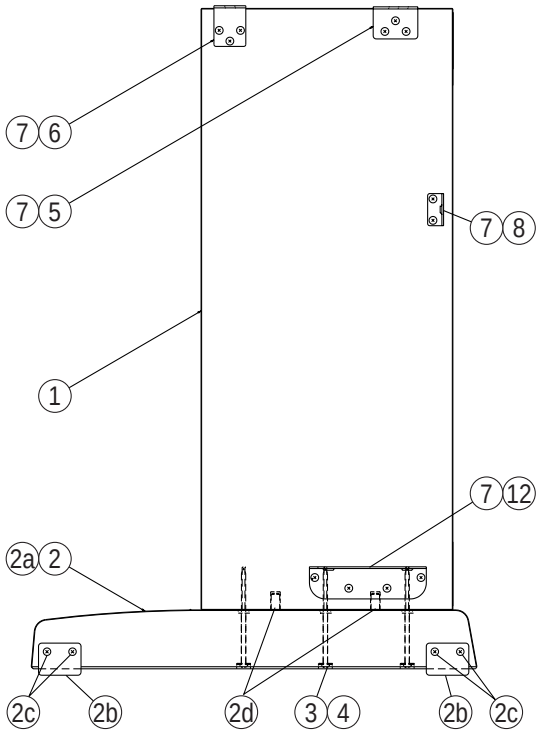


| REF NO. | PART NO. | DESCRIPTION | | 部品名 | REMARKS | QTY | RANK |
|---|---|---|---|---|---|---|---|
| | | SIDE BOARD ASSEMBLY | | 側板ＡＳＳ’Ｙ | CLP-115 | | |
| | **V9742300** | Side Board Assembly L | LEFT | 側板Ａｓｓ’ｙ（Ｌ） | | | 18 |
| 1 | **--** | Side Board | LEFT | 側板（Ｌ） | (V974270) | | |
| 2 | **--** | Stand Base Assembly | LEFT | 妻土台Ａｓｓ’ｙ（Ｌ） | (V862090) | | |
| 2a | **--** | Stand Base | LEFT | 妻土台（Ｌ） | (V862110) | | |
| 2b | **VR930600** | Foot | | スベリ座 | | 2 | 01 |
| 2c | **EM030180** | Flat Head Tapping Screw-1 | 3.5X20 MFZN2BL | ＋皿ＴＰ１種 | | 4 | 01 |
| 2d | **--** | Dowel | 8mm 30mm DIA8X30L | ダボ（ＹＭＭＡ） | (V801490) | 2 | |
| 3 | **VK287600** | Flat Washer | 4.0X12X1.0 MFZN2Y | 平座金みがき丸 | | 3 | 01 |
| 4 | **V9761000** | Pan Head Tapping Screw | 4.0X90 MFZN2Y | ＋ナベＴＰ１種 | | 3 | 01 |
| 5 | **VS295500** | Holder, Stand | LEFT | ＳＴ．受け金具Ｌ | | | 05 |
| 6 | **VN973100** | Angle Bracket, ST | | ＳＴ．アングル | | | 04 |
| 7 | **EP030260** | Bind Head Tapping Screw-1 | 3.5X16 MFZN2BL | ＋バインドＴＰ１種 | | 12 | 01 |
| 8 | **VQ958300** | Holder, Back Board | | 裏板取付金具 | | | 05 |
| 12 | **V9703500** | Angle, PB | | ＰＢ金具 | | | 02 |
| | | | | | | | |
| | **V9742400** | Side Board Assembly R | RIGHT | 側板Ａｓｓ’ｙ（Ｒ） | | | 18 |
| 1 | **--** | Side Board | RIGHT | 側板（Ｒ） | (V974280) | | |
| 2 | **--** | Stand Base Assembly | RIGHT | 妻土台Ａｓｓ’ｙ（Ｒ） | (V862100) | | |
| 2a | **--** | Stand Base | RIGHT | 妻土台（Ｒ） | (V862120) | | |
| 2b | **VR930600** | Foot | | スベリ座 | | 2 | 01 |
| 2c | **EM030180** | Flat Head Tapping Screw-1 | 3.5X20 MFZN2BL | ＋皿ＴＰ１種 | | 4 | 01 |
| 2d | **--** | Dowel | 8mm 30mm DIA8X30L | ダボ（ＹＭＭＡ） | (V801490) | 2 | |
| 3 | **VK287600** | Flat Washer | 4.0X12X1.0 MFZN2Y | 平座金みがき丸 | | 3 | 01 |
| 4 | **V9761000** | Pan Head Tapping Screw | 4.0X90 MFZN2Y | ＋ナベＴＰ１種 | | 3 | 01 |
| 5 | **VS295600** | Holder, Stand | RIGHT | ＳＴ．受け金具Ｒ | | | 05 |
| 6 | **VN973100** | Angle Bracket, ST | | ＳＴ．アングル | | | 04 |
| 7 | **EP030260** | Bind Head Tapping Screw-1 | 3.5X16 MFZN2BL | ＋バインドＴＰ１種 | | 12 | 01 |
| 8 | **VQ958300** | Holder, Back Board | | 裏板取付金具 | | | 05 |
| 12 | **V9703500** | Angle, PB | | ＰＢ金具 | | | 02 |

*: New Parts（新規部品）

RANK: Japan only

# ■ PEDAL BOX ASSEMBLY

**• Front view**

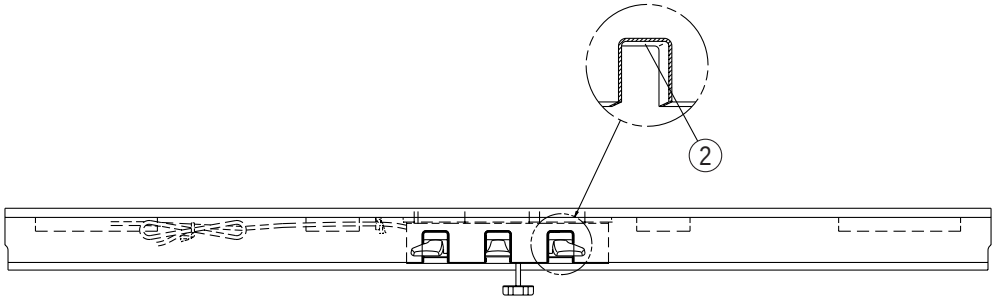


**• Bottom view**

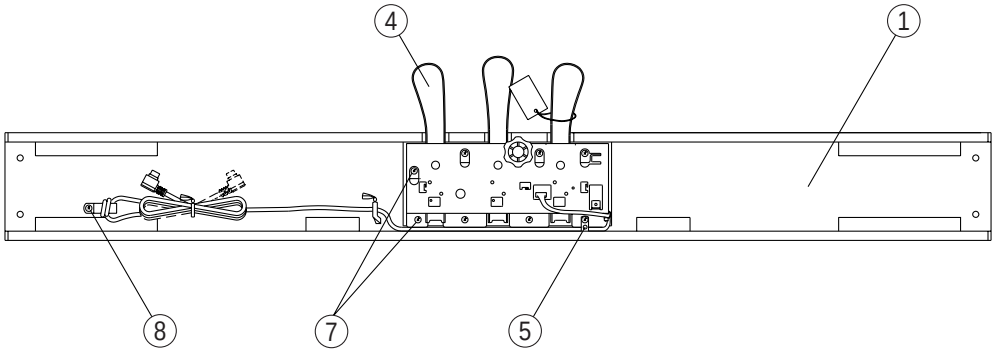


| REF NO. | PART NO. | DESCRIPTION | | 部品名 | REMARKS | QTY | RANK |
|---|---|---|---|---|---|---|---|
| | | PEDAL BOX ASSEMBLY | | ペダルＢＯＸＡＳＳ’Ｙ | CLP-115 | | |
| | -- | Pedal Box Assembly | | ペダルＢｏｘＡｓｓ’ｙ | (V974350) | | |
| 1 | **V9743700** | Pedal Box Assembly | | ペ ダ ル Ｂ Ｏ Ｘ | | | 11 |
| 2 | **VU464300** | Felt | 115X12X2 RE | フ ェ ル ト | | 3 | 03 |
| 4 | **V0053700** | Pedal Assembly | 3SW PK-LF | ペダルＡｓｓ’ｙ（Ｉ） | | | 18 |
| 5 | **CB065520** | Nylon Clamp | NK-3N | ナイロンクランプ | | | 01 |
| 7 | **EP040230** | Bind Head Tapping Screw-1 | 4.0X14 MFZN2Y | ＋バインドＴＰ１種 | | 8 | 01 |
| 8 | **VU455300** | Truss Head Tapping Screw-1 | 4.0X12 MFZN2Y | ＋トラスＴＰ １種 | | | 01 |

*: New Parts **（新規部品）**

RANK: Japan only

# ■ PEDAL ASSEMBLY

• Top view

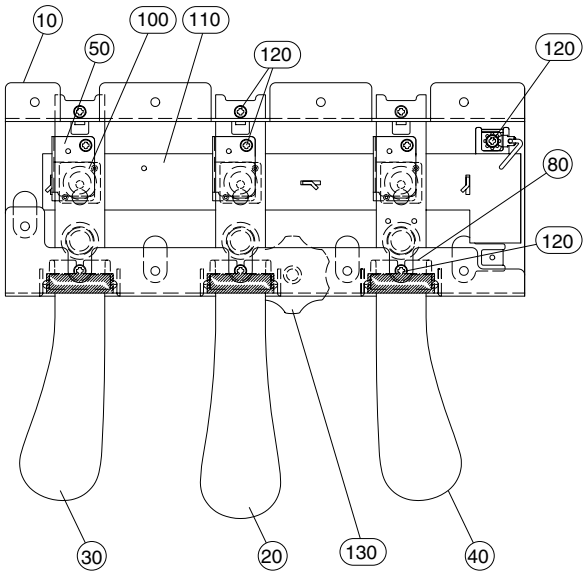


• Side view

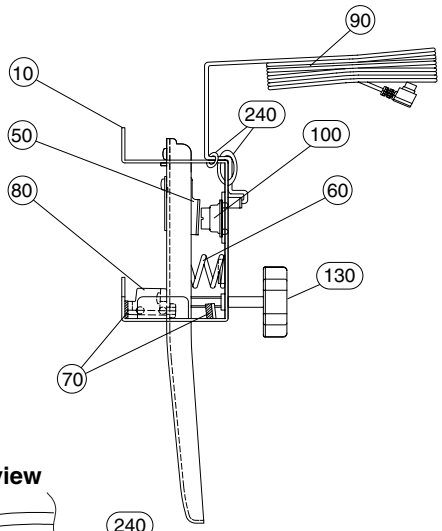


• Bottom view

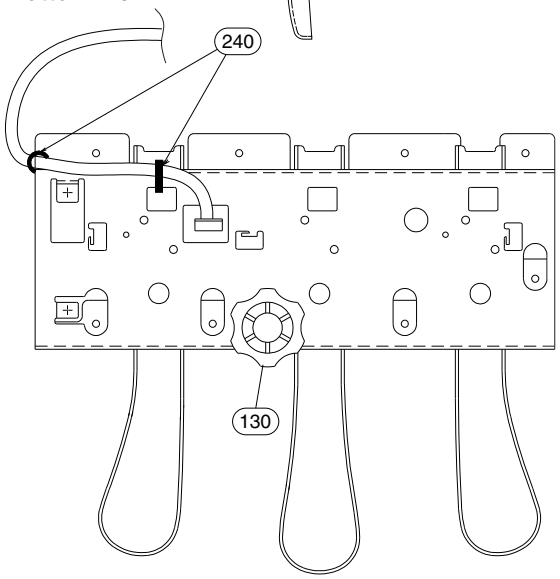


| REF NO. | PART NO. | DESCRIPTION | | 部品名 | REMARKS | QTY | RANK |
|---|---|---|---|---|---|---|---|
| | | PEDAL ASSEMBLY | (I) | ペダルＡＳＳ’Ｙ | CLP115 | | |
| | **V0053700** | Pedal Assembly | 3SW PK-LF | ペダルＡｓｓ’ｙ（Ｉ） | | | 18 |
| 10 | **VU339700** | Pedal Frame | | ペダルフレーム | | | 09 |
| 20 | **VU362000** | Pedal Piece C | CENTER | ペダル本体セット（Ｃ） | SOSTENUTO | | 08 |
| 30 | **VU362100** | Pedal Piece L | LEFT | ペダル本体セット（Ｌ） | SOFT | | 08 |
| 40 | **VU362200** | Pedal Piece R | RIGHT | ペダル本体セット（Ｒ） | DAMPER | | 08 |
| 50 | **VV433500** | Actuator | PEDAL | アクチュエータ | | 3 | 03 |
| 60 | **VP348100** | Pedal Spring | | ペダルバネ | | 3 | 03 |
| 70 | **VU346500** | Felt | BL | フェルトＰＡ | | 6 | 03 |
| 80 | **VU339800** | Shutter | PEDAL | シャッター | | 3 | 03 |
| 90 | **V0044700** | Connector Assembly | PK-LF | ＰＫケーブル－ＬＦ | | | 08 |
| 100 | **VU456000** | Rubber Contact | 1 PEDAL | 接点ゴムドーム | | 3 | 03 |
| 110 | **V2337300** | Circuit Board | | ペダルシート | | | 07 |
| 120 | **EP600190** | Bind Head Tapping Screw-B | 3.0X8 MFZN2BL | ＋バインドＢタイト | | 10 | 01 |
| 130 | **VU379700** | Adjuster | | アジャスター | | | 02 |
| 140 | **TX920280** | Grease | G-31KA 50g | グリス | | | 10 |
| 240 | **CB069250** | Cord Holder | BK-1 | インシュロックタイ | | 2 | 01 |

*: New Parts（新規部品）

RANK: Japan only

# ■ TOP BOARD ASSEMBLY

**• Top view**

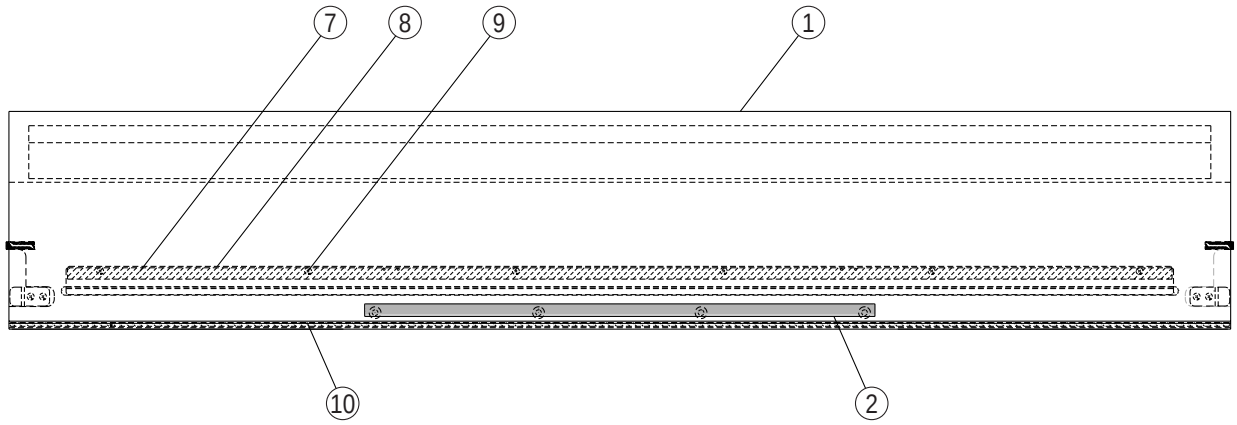


**• Side view**

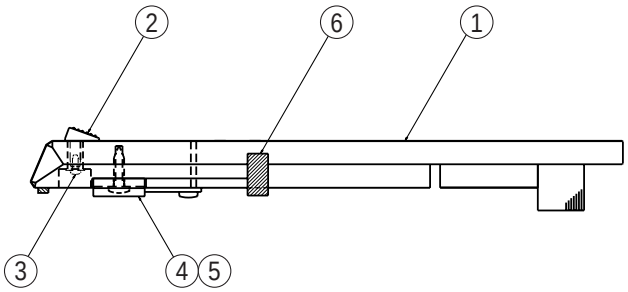


| REF NO. | PART NO. | DESCRIPTION | | 部品名 | REMARKS | QTY | RANK |
|---|---|---|---|---|---|---|---|
| | | TOP BOARD ASSEMBLY | | 屋根ＡＳＳ’Ｙ | CLP-115 | | |
| | **V8513300** | Top Board Assembly | | 屋根Ａｓｓ’ｙ | | | 10 |
| 1 | **--** | Top Board Assembly | | 屋根集成 | (V851340) | | |
| 2 | **V2780400** | Stopper Rail, Music Score | | 譜面止レールＡｓｓ’ｙ | | | 05 |
| 3 | **VZ179200** | PW Head Screw | 2.2X5.8 MFZN2Y | ＋ＰＷＨ特殊ＰＣネジ | | 4 | 01 |
| 4 | **VQ485700** | Holder, Top Board | | 屋根固定金具Ｆ | | 2 | 03 |
| 5 | **EP040230** | Bind Head Tapping Screw-1 | 4.0X14 MFZN2Y | ＋バインドＴＰ１種 | | 4 | 01 |
| 6 | **VS349600** | Felt | 40X8X3 | フェルト | | 2 | 03 |
| 7 | **--** | Adhesive Tape | #500 W=12 | 粘着テープ | (VE36310) | | |
| 8 | **--** | Keyboard Rail | | 鍵盤前金具 | (V513070) | | |
| 9 | **EP030190** | Bind Head Tapping Screw-1 | 3.5X16 MFZN2Y | ＋バインドＴＰ１種 | | 6 | 01 |
| 10 | **--** | Felt | | フェルト | (V991700) | | |

*: New Parts **（新規部品）**

RANK: Japan only

# ■ MUSIC REST ASSEMBLY

• Rear view

• Side view

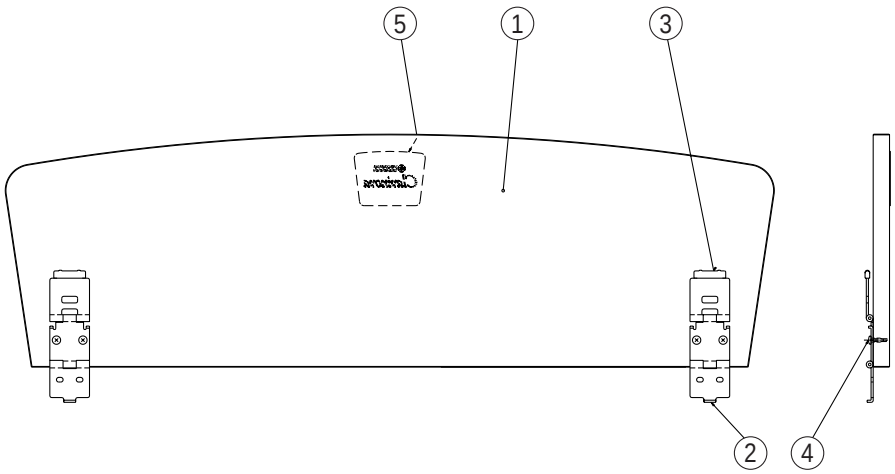


| REF NO. | PART NO. | DESCRIPTION | | 部品名 | REMARKS | QTY | RANK |
|---|---|---|---|---|---|---|---|
| | | MUSIC REST ASSEMBLY | | 譜面板ASS'Y | CLP-115 | | |
| | **V8514200** | Music Rest Assembly | | 譜面板Ass'y | | | 16 |
| 1 | **--** | Music Rest | | 譜面板 | (V851430) | | |
| 2 | **V8437600** | Hinge | 1STEP 1.6mm YMMA | 譜面蝶番 | | 2 | 05 |
| 3 | **VV965900** | Hinge Cap | T=1.6mm | 蝶番キャップ | | 2 | 03 |
| 4 | **20404200** | Bind Head Tapping Screw-1 | 3.0X10 MFZN2BL | ＋バインドＴＰ１種 | | 4 | |
| 5 | **V5782300** | Badge | BRASS | バッジ（クラビノーバ） | | | 05 |

*: New Parts **（新規部品）**

RANK: Japan only

# ■ SIDE COVER ASSEMBLY (L, R)

***This figure shows a side board assembly (L).**

**• Front view**

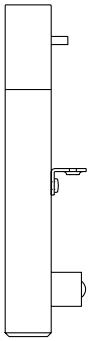

**• Side view**

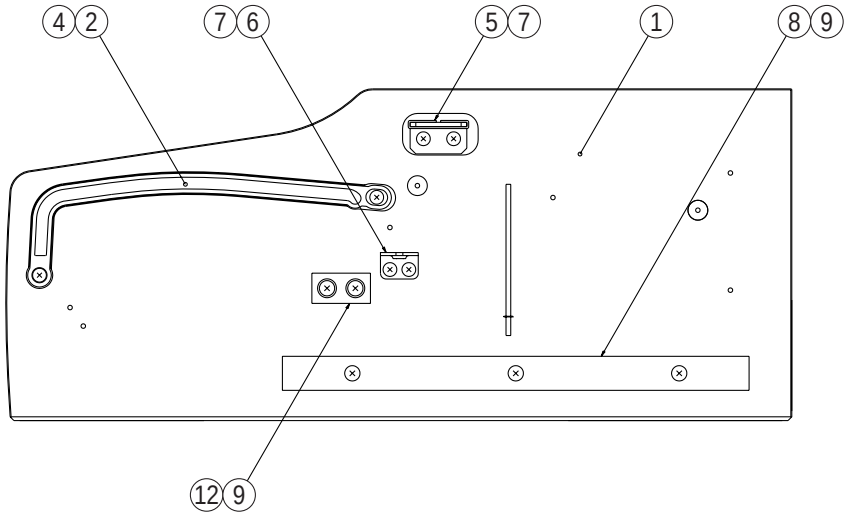


| REF NO. | PART NO. | DESCRIPTION | | 部品名 | REMARKS | QTY | RANK |
|---|---|---|---|---|---|---|---|
| | | SIDE COVER ASSEMBLY | | 腕木ＡＳＳ’Ｙ | CLP-115 | | |
| | **V8517300** | Side Cover Assembly | LEFT | 腕木Ａｓｓ’ｙ（Ｌ） | | | 09 |
| 1 | **--** | Side Cover | LEFT | 腕　木　（　Ｌ　） | (V851760) | | |
| 2 | **V8518100** | Guide Rail | LEFT | ガイドレール（Ｌ） | | | 03 |
| 4 | **EP030240** | Bind Head Tapping Screw-1 | 3.5X12 MFZN2Y | ＋バインドＴＰ１種 | | 2 | 01 |
| 5 | **V7534400** | Holder Assembly, Top Board | | 屋根受け金具Ａｓｓ’ｙ | | | 03 |
| 6 | **VN887000** | Angle Bracket | | 受　け　金　具 | | | 03 |
| 7 | **EP030190** | Bind Head Tapping Screw-1 | 3.5X16 MFZN2Y | ＋バインドＴＰ１種 | | 4 | 01 |
| 8 | **--** | Cleat T | | 桟　（　Ｔ　） | (V851960) | | |
| 9 | **VA076400** | Truss Head Tapping Screw-1 | 3.5X30 MFZN2Y | ＋トラスＴＰ　１種 | | 3 | 01 |
| | | | | | | | |
| | **V8517500** | Side Cover Assembly | RIGHT | 腕木Ａｓｓ’ｙ（Ｒ） | | | 08 |
| 1 | **--** | Side Cover | RIGHT | 腕　木　（　Ｒ　） | (V851770) | | |
| 2 | **V8518200** | Guide Rail | RIGHT | ガイドレール（Ｒ） | | | 03 |
| 4 | **EP030240** | Bind Head Tapping Screw-1 | 3.5X12 MFZN2Y | ＋バインドＴＰ１種 | | 2 | 01 |
| 5 | **V7534400** | Holder Assembly, Top Board | | 屋根受け金具Ａｓｓ’ｙ | | | 03 |
| 6 | **VN887000** | Angle Bracket | | 受　け　金　具 | | | 03 |
| 7 | **EP030190** | Bind Head Tapping Screw-1 | 3.5X16 MFZN2Y | ＋バインドＴＰ１種 | | 4 | 01 |
| 8 | **--** | Cleat T | | 桟　（　Ｔ　） | (V851960) | | |
| 9 | **VA076400** | Truss Head Tapping Screw-1 | 3.5X30 MFZN2Y | ＋トラスＴＰ　１種 | | 5 | 01 |
| 12 | **--** | Cleat P | | 桟　（　Ｐ　） | (V968280) | | |

*: New Parts **（新規部品）**

RANK: Japan only

# ■ END BLOCK ASSEMBLY (L, R)

• **Bottom view (L)**

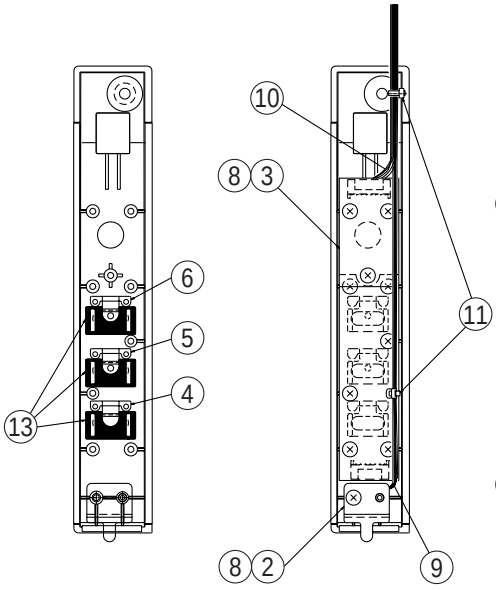


• **Top view (L)**

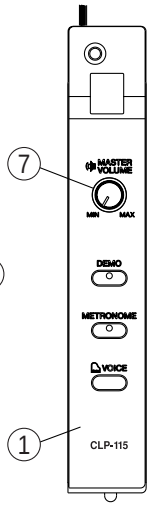


• **Side view (R)**

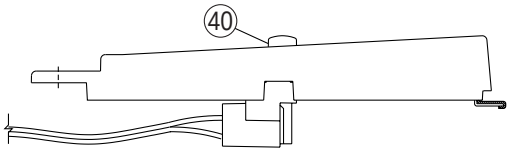


• **Bottom view (R)**

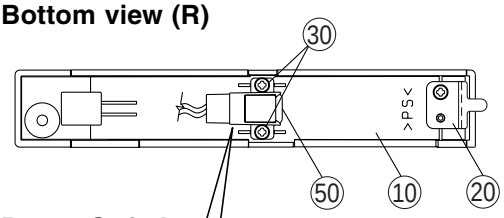


• **Power Switch Assembly**

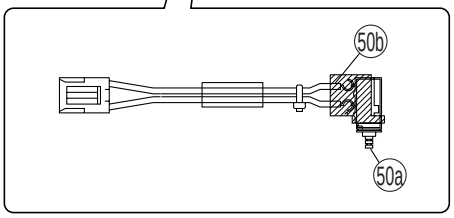


| | REF NO. | PART NO. | DESCRIPTION | | 部品名 | REMARKS | QTY | RANK |
|---|---|---|---|---|---|---|---|---|
| | | | END BLOCK ASSEMBLY | | 拍子木ASS'Y | CLP-115 | | |
| | | -- | End Block Assembly | LEFT | 拍子木（L）Ass'y | (WB29660) | | |
| * | 1 | WB296700 | End Block Sub Assembly | LEFT | 拍子木Lサブ Ass'y | | | |
| | 2 | -- | Angle P | | アングル P | (V861560) | | |
| | 3 | V8910400 | Circuit Board | PN | PN シート | (V891070) | | 07 |
| | 4 | V8065100 | Button | B 1 | ボタン（B）1 | VOICE | | 04 |
| | 5 | V8670300 | Button | B DG | ボタンBダルグリーン | METRONOME | | 01 |
| | 6 | V8948200 | Button | B DB LENS | ボタンBレンズツキ | DEMO | | 01 |
| | 7 | V2300100 | Knob | | VR ノブ | MASTER VOLUME | | 04 |
| | 8 | EP600250 | Bind Head Tapping Screw-B | 3.0X8 MFZN2Y | ＋バインドBタイト | | 10 | 01 |
| | 9 | -- | Connector Assembly | KRD-KRD 7P-920 | KRD－KRD束線 | (V908660) | | |
| | 10 | -- | Connector Assembly | VOL L=880 | VOL 束線 | (V909180) | | |
| | 11 | CB069250 | Cord Holder | BK-1 | インシュロックタイ | | 2 | 01 |
| | 13 | -- | Dust Proof Cloth | | 不織布 | (V926650) | 3 | |
| | | | | | | | | |
| | | V8733300 | End Block Assembly | RIGHT | 拍子木（R）Ass'y | | | 08 |
| | 10 | V9361800 | End Block Sub Assembly | RIGHT | 拍子木Rサブ Ass'y | | | 03 |
| | 20 | -- | Angle P | | アングル P | (V861560) | | |
| | 30 | EP600250 | Bind Head Tapping Screw-B | 3.0X8 MFZN2Y | ＋バインドBタイト | | 3 | 01 |
| | 40 | VF663400 | Knob | BL | プッシュツマミ | POWER | | 02 |
| ⚠ | 50 | VS353700 | Power Switch Assembly | PSW | パワーSW束線 | | | 08 |
| ⚠ | 50a | VC843500 | Push Switch | SDDLB1216A J.U.C.S | プッシュSW | POWER | | 03 |
| | 50b | V5800800 | Switch Cover | IV, BL | パワースイッチカバー | | | 01 |

*: New Parts **（新規部品）**

RANK: Japan only

# ■ PANEL ASSEMBLY

**• Bottom view**

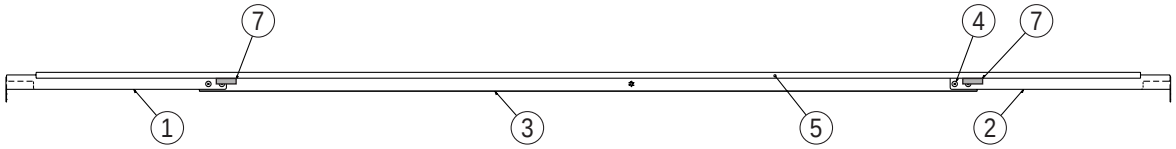


**• Front view**

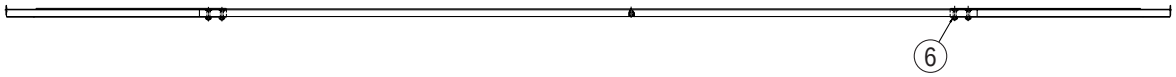


**• Top view**

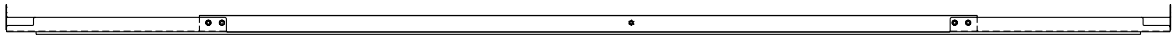

| REF NO. | PART NO. | DESCRIPTION | | 部品名 | REMARKS | QTY | RANK |
|---|---|---|---|---|---|---|---|
| | | PANEL ASSEMBLY | | パネルASS'Y | CLP-115 | | |
| | **V8614600** | Panel Assembly | | パネルAss'y | | | 07 |
| 1 | -- | Panel | LEFT | パネル（L）塗装品 | (V904060) | | |
| 2 | -- | Panel | RIGHT | パネル（R）塗装品 | (V904070) | | |
| 3 | -- | Panel | CENTER | パネル（C）集成 | (V955960) | | |
| 4 | **V5993400** | Flat Head Screw | 3.0X12 MFZN2BL | 十皿小ネジ | | 4 | 01 |
| 5 | **VT196300** | Felt | MK | フェルト | | | 04 |
| 5 | **VU638700** | Felt | MK | フェルト | | | 05 |
| 6 | **ES200030** | Hexagonal Nut | #1 3.0 MFZN2BL | 六角ナット | | 4 | 01 |
| 7 | -- | Cushion | ZULEN 2X6X20 | クッション | (WB56690) | 2 | |

*: New Parts **（新規部品）**

RANK: Japan only

# ■ KEY COVER ASSEMBLY

**• Bottom view**

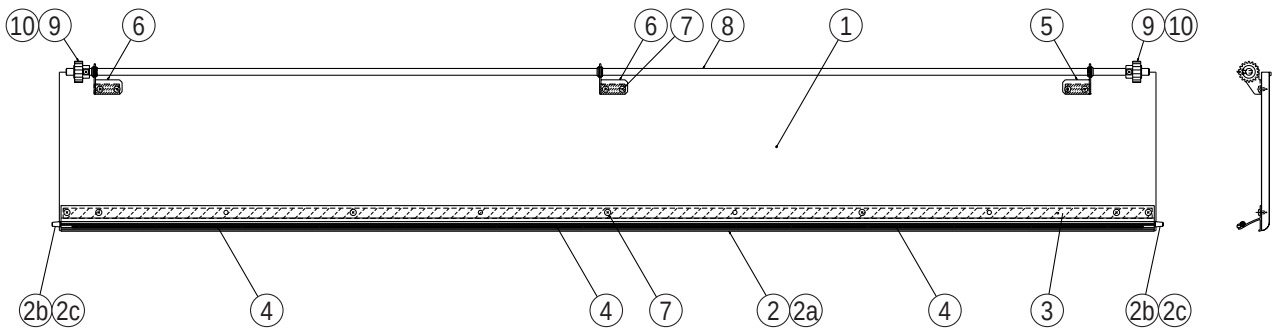


**• Top view**

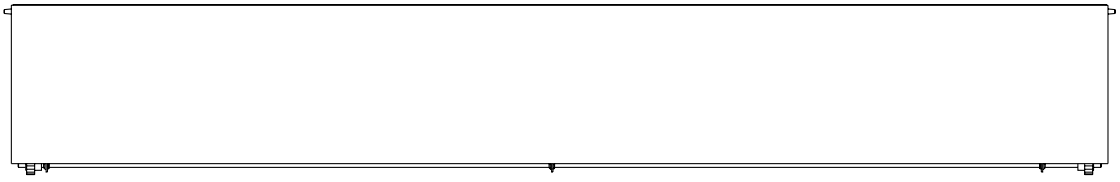

| REF NO. | PART NO. | DESCRIPTION | | 部品名 | REMARKS | QTY | RANK |
|---|---|---|---|---|---|---|---|
| | | KEY COVER ASSEMBLY | | スライド蓋ＡＳＳ’Ｙ | CLP-115 | | |
| | **V8516800** | Key Cover Assembly | | スライド蓋Ａｓｓ’ｙ | | | 15 |
| 1 | **--** | Slide Cover | 9 1300 | スライド蓋 | (V851690) | | |
| 2 | **V4961900** | Sash Assembly | | サッシＦ Ａｓｓ’ｙ | | | 10 |
| 2a | **--** | Sash | | サッシＦ | (V496430) | | |
| 2b | **V4964400** | Guide Pin | | ガイドピン | | 2 | |
| 2c | **--** | Spacer | | スペーサー | (V549580) | 2 | |
| 3 | **--** | Adhesive Tape | #500 W=12 | 粘着テープ | (VE36310) | | |
| 4 | **V9465400** | Sash Cushion | H-32 426X2.5XT4 | サッシクッション | | 3 | 01 |
| 5 | **V8901400** | Supporting Holder Assembly | LEFT | 支持金具Ａｓｓ’ｙ（Ｌ） | | | |
| 6 | **V8901500** | Supporting Holder Assembly | RIGHT | 支持金具Ａｓｓ’ｙ（Ｒ） | | 2 | |
| 7 | **VN920900** | Bind Head Tapping Screw-1 | 3.5X8 MFZN2BL | ＋バインドＴＰ１種 | | 13 | 01 |
| 8 | **V8517000** | Rod | | 連動棒 | | | |
| 9 | **V9857900** | Gear | M90S NT | ピニオンギヤ | | 2 | |
| 10 | **EG330060** | Bind Head Screw | 3.0X10 MFZN2Y | ＋バインド小ネジ | | 2 | 01 |

*: New Parts **（新規部品）**

RANK: Japan only

# ■ POWER SUPPLY UNIT

**• Top view**

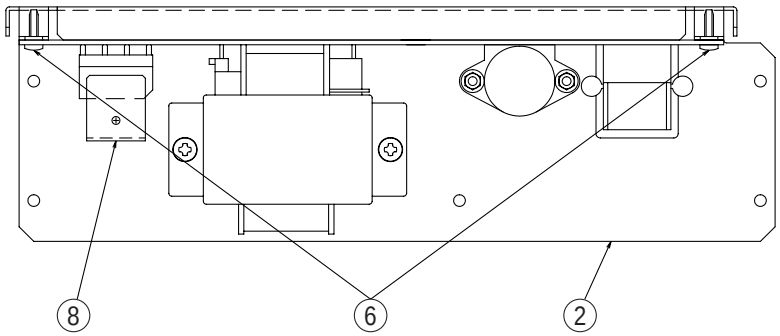


**• Front view**

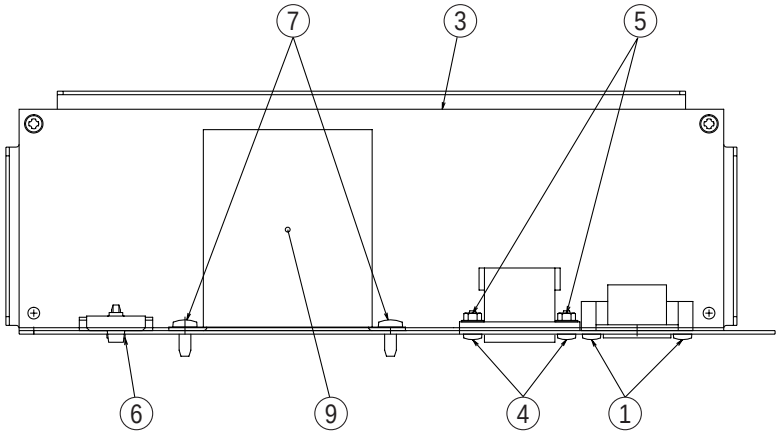


| REF NO. | PART NO. | DESCRIPTION | | 部品名 | REMARKS | QTY | RANK |
|---|---|---|---|---|---|---|---|
| | | POWER SUPPLY UNIT | | 電源ユニット | CLP-115 | | |
| | **V0010400** | Power Supply Unit | | 電源ユニット（E） | E | | 14 |
| | **V0010500** | Power Supply Unit | | 電源ユニット（N） | N | | 22 |
| | **V0010300** | Power Supply Unit | | 電源ユニット（U） | U | | 14 |
| 1 | **EP600140** | Bind Head Tapping Screw-B | 3.0X10 MFZN2BL | ＋バインドBタイト | | 2 | 01 |
| 2 | **VZ958800** | Plate, AC Inlet | | ACインレット金具 | U,E | | 07 |
| 2 | **VZ958900** | Panel, AC Inlet | | ACインレット金具印刷品 | N | | 08 |
| 3 | **V0011000** | Circuit Board | PS | PSシート（E） | E (V001150) | | 11 |
| 3 | **V0011100** | Circuit Board | PS | PSシート（N） | N (V001160) | | 12 |
| 3 | **V0010800** | Circuit Board | PS | PSシート（U） | U (V001140) | | 11 |
| 4 | **EG330320** | Bind Head Screw | 3.0X12 MFZN2BL | ＋バインド小ネジ | N | 2 | 01 |
| 5 | **VA211900** | Hexagonal Nut | 3.0 MFZN2Y | フランジ付六角ナット | N | 2 | 01 |
| 6 | **VE683000** | Bind Head Tapping Screw-B | 3.0X12 MFZN2Y | ＋バインドBタイト | | 3 | 01 |
| 7 | **EP600240** | Bind Head Tapping Screw-B | 4.0X10 MFZN2BL | ＋バインドBタイト | | 2 | 01 |
| 8 | **VT461100** | Transistor Holder | A | トランジスターホルダーA | | | 03 |
| 9 | **XU445A00** | Power Transformer | J/UL/CSA A | 電源トランス | U | | 09 |
| 9 | **XU446A00** | Power Transformer | IEC65 E | 電源トランス | E | | 09 |
| 9 | **XU447A00** | Power Transformer | N IEC65 E | 電源トランス | N | | 09 |

*: New Parts（新規部品）

RANK: Japan only

## ■ KEYBOARD ASSEMBLY

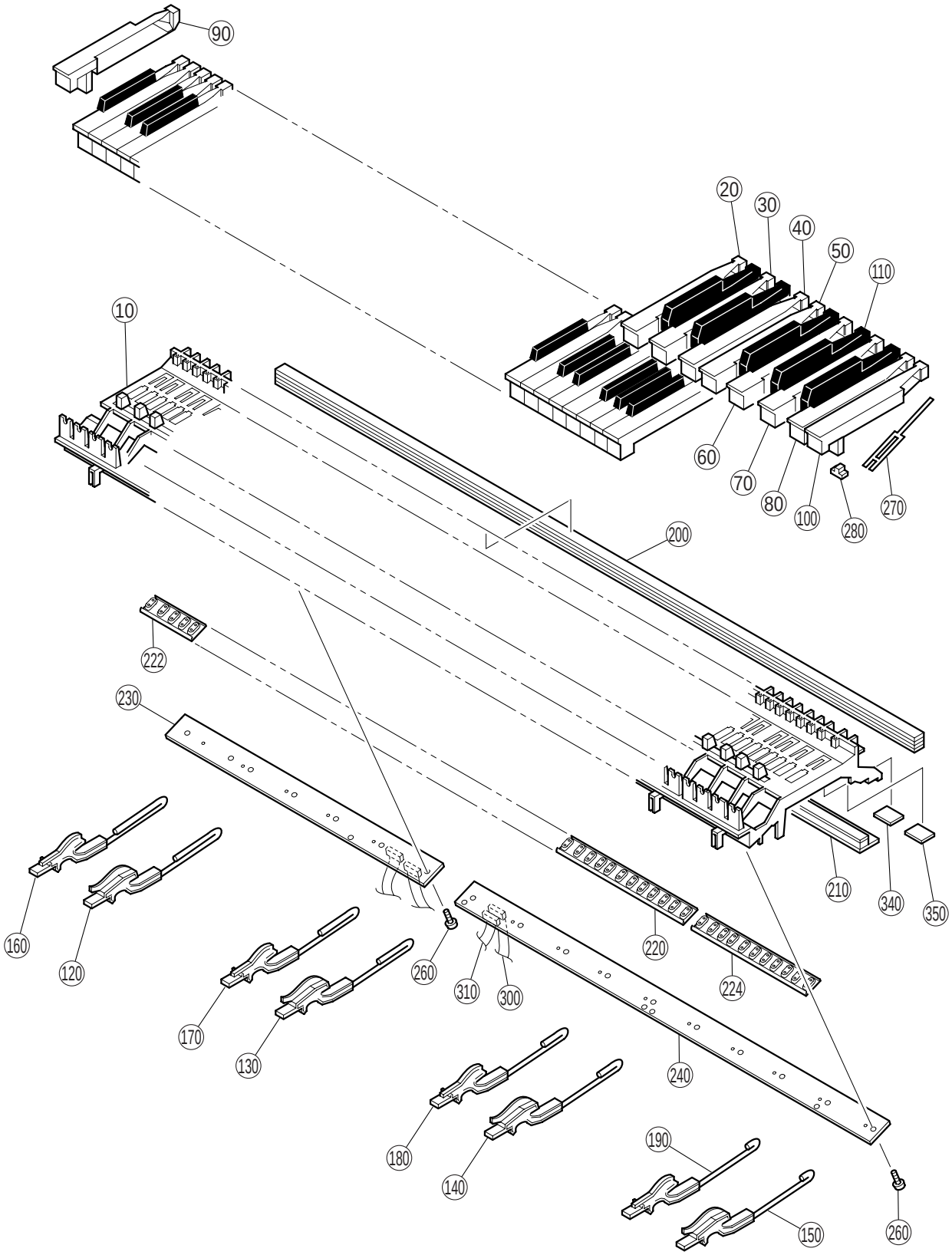

| REF NO. | PART NO. | DESCRIPTION | | 部品名 | REMARKS | QTY | RANK |
|---|---|---|---|---|---|---|---|
| | | KEYBOARD ASSEMBLY | | ＧＨＤ鍵盤ＡＳＳ’Ｙ | CLP-115 | | |
| | **VZ705400** | Keyboard Assembly | A88 K6 | ＧＨＤ鍵盤Ａｓｓ’ｙ | | | 63 |
| 10 | **--** | MK Frame | | フレーム８８アウトサート | (VU42210) | | |
| 20 | **VU101000** | White Key | WH C | 白鍵Ｃ | | 7 | 05 |
| 30 | **VU101100** | White Key | WH D | 白鍵Ｄ | | 7 | 05 |
| 40 | **VU101200** | White Key | WH E | 白鍵Ｅ | | 7 | 05 |
| 50 | **VU101300** | White Key | WH F | 白鍵Ｆ | | 7 | 05 |
| 60 | **VU101400** | White Key | WH G | 白鍵Ｇ | | 7 | 05 |
| 70 | **VU101500** | White Key | WH A | 白鍵Ａ | | 7 | 05 |
| 80 | **VU101600** | White Key | WH B | 白鍵Ｂ | | 8 | 05 |
| 90 | **VU101700** | White Key | WH A' | 白鍵Ａ’ | | | 05 |
| 100 | **VU101800** | White Key | WH C' | 白鍵Ｃ’ | | | 05 |
| 110 | **VU102100** | Black Key | BL | 黒鍵 | | 36 | 05 |
| 120 | **VY828500** | Hammer Assembly, White Key | W1 | ドーム用ハンマーＷ１ | | 13 | 05 |
| 130 | **VY828600** | Hammer Assembly, White Key | W2 | ドーム用ハンマーＷ２ | | 13 | 05 |
| 140 | **VY828700** | Hammer Assembly, White Key | W3 | ドーム用ハンマーＷ３ | | 13 | 05 |
| 150 | **VY828800** | Hammer Assembly, White Key | W4 | ドーム用ハンマーＷ４ | | 13 | 05 |
| 160 | **VY828900** | Hammer Assembly, Black Key | B1 | ドーム用ハンマーＢ１ | | 9 | 05 |
| 170 | **VY829000** | Hammer Assembly, Black Key | B2 | ドーム用ハンマーＢ２ | | 9 | 05 |
| 180 | **VY829100** | Hammer Assembly, Black Key | B3 | ドーム用ハンマーＢ３ | | 9 | 05 |
| 190 | **VY829200** | Hammer Assembly, Black Key | B4 | ドーム用ハンマーＢ４ | | 9 | 05 |
| 200 | **VU342100** | Stopper | 1229X12X14.8T | ストッパーＵ８８ | | | 09 |
| 210 | **V7640100** | Stopper Felt | 1239.5X28X10.1T | ストッパーＬ８８＿Ｗ | | | 07 |
| 220 | **VY846700** | Rubber Contact | GH 2M OCT | シーソードームＤ－Ｃ＃ | D0-C1#,D1-C2#,D2-C3#<br>D3-C4#,D4-C5#,D5-C6# | 6 | 08 |
| 222 | **VY846800** | Rubber Contact | GH 2M OCT | シーソードームＡ－Ｃ＃ | A-1-C0# | | 08 |
| 224 | **VY846900** | Rubber Contact | GH 2M OCT | シーソードームＤ－Ｃ | D6-C7 | | 08 |
| 230 | **VZ705200** | Circuit Board | GH-D_SW L | ＧＨ－Ｄ＿ＳＷシートＬ | | | 12 |
| 240 | **VZ705300** | Circuit Board | GH-D_SW H | ＧＨ－Ｄ＿ＳＷシートＨ | | | 13 |
| 260 | **EP600270** | Bind Head Tapping Screw-P | 3.0X10 MFZN2Y | ＋バインドＰタイト | | 17 | 01 |
| 260 | **VT413400** | Bind Head Tapping Screw-P | 3.0X10 MFZN2 | ＋バインドＰタイト | | 17 | 01 |
| 270 | **VZ417900** | Spring R | GH WH,BL | スプリング Ｒ | | 88 | 03 |
| 280 | **V2211300** | Rubber 2 | GH,GHD,HE | 駆動ラバー２ | | 88 | 03 |
| 290 | **--** | Grease | G-1006Y | グリス | (V627430) | | |
| 300 | **VU341800** | Connector Assembly | 9P | 中継束線ブロック | | | 06 |
| 310 | **VU341900** | Connector Assembly | 12P | 中継束線ノート | | | 07 |
| 340 | **VV467900** | Stopper Support A | 35.5 20 * | ストッパーサポートＡ | | 7 | 03 |
| 350 | **VV468100** | Stopper Support B | 24 20 - | ストッパーサポートＢ | | 12 | 03 |

*: New Parts **（新規部品）**

RANK: Japan only

## ■ A SHEET ASSEMBLY

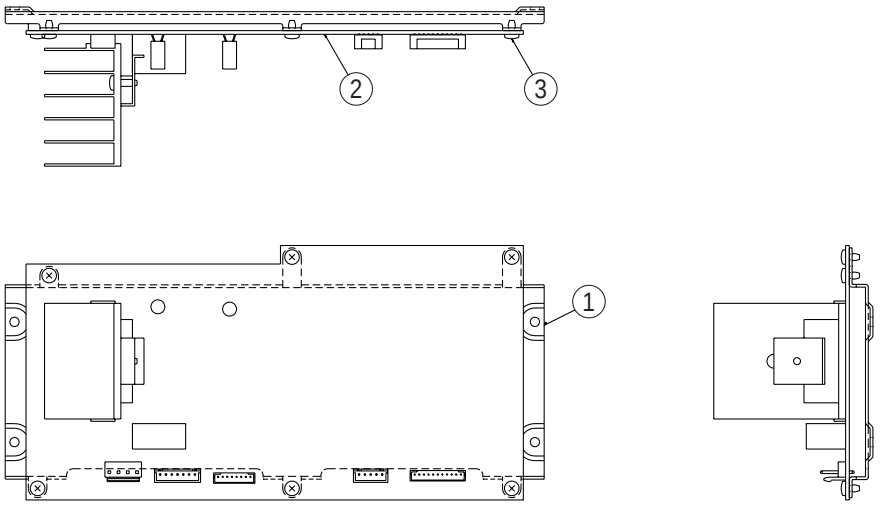


| REF NO. | PART NO. | DESCRIPTION | | 部品名 | REMARKS | QTY | RANK |
|---|---|---|---|---|---|---|---|
| | | A SHEET ASSEMBLY | | Aシートアッシ'Y | CLP-115 | | |
| | -- | A Sheet Assembly | | Aシートアッシ'y | (V907410) | | |
| 1 | -- | Holder, A Sheet | | Aシート固定金具 | (V906990) | | |
| 2 | V8910200 | Circuit Board | AM | AMシート | | | 14 |
| 3 | EP600130 | Bind Head Tapping Screw-B | 3.0X6 MFZN2Y | +バインドBタイト | | 6 | 01 |

*: New Parts **(新規部品)**

RANK: Japan only

## ■ D-JACK ASSEMBLY

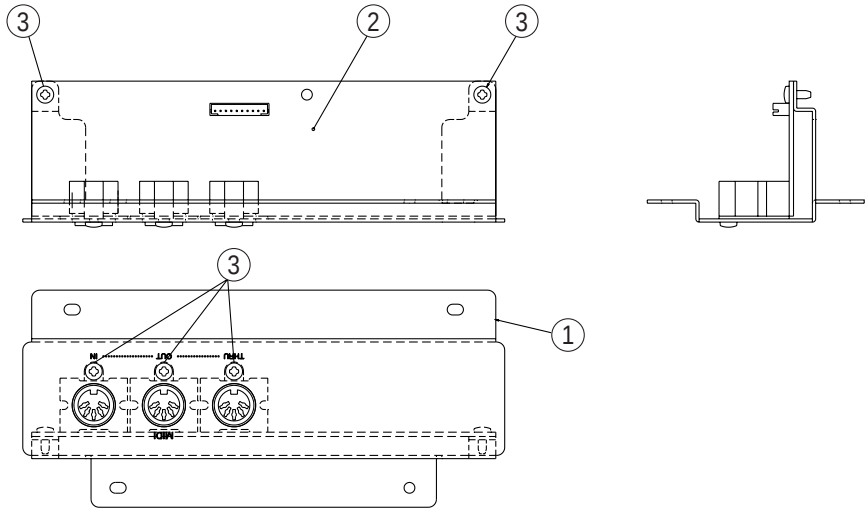


| REF NO. | PART NO. | DESCRIPTION | | 部品名 | REMARKS | QTY | RANK |
|---|---|---|---|---|---|---|---|
| | | D-JACK ASSEMBLY | | Dジャックアッシ'Y | CLP-115 | | |
| | -- | D-Jack Assembly | D-JACK | Dジャックアッシ'y | (V975480) | | |
| 1 | V9755000 | Angle, D-JACK | 3.0X8 MFZN2BL | Dジャック金具印刷品 | | | 04 |
| 2 | V9456500 | Circuit Board | | D-JACKシート | (V945640) | | 08 |
| 3 | EP600190 | Bind Head Tapping Screw-B | | +バインドBタイト | | 5 | 01 |

*: New Parts **(新規部品)**

RANK: Japan only

# ■ HEADPHONES JACK ASSEMBLY

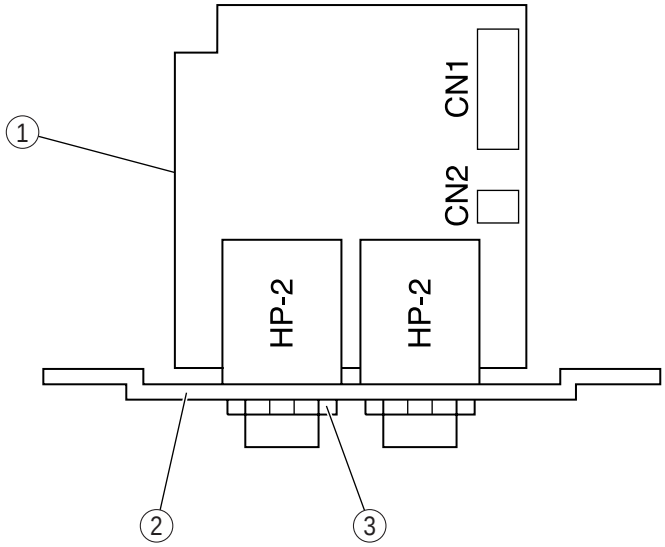


| REF NO. | PART NO. | DESCRIPTION | | 部品名 | REMARKS | QTY | RANK |
|---|---|---|---|---|---|---|---|
| | | HEADPHONES JACK ASSEMBLY | | ＨＰジャックＡＳＳ’Ｙ | CLP-115 | | |
| | -- | Headphones Jack Assembly | | ＨＰジャックＡｓｓ’ｙ | (V969120) | | |
| 1 | **V9626700** | Circuit Board | HP | Ｈ　Ｐ　シ　ー　ト | (V962660) | | |
| 2 | **VN631800** | Angle, Headphone | | Ｈ．Ｐ取付金具 | | | 04 |
| 3 | **VB508600** | Hexagonal Nut | 12.0 14X2 MFZN2BL | 特殊六角ナット | | 2 | 01 |

*: New Parts **（新規部品）**

RANK: Japan only

# ■ BENCH

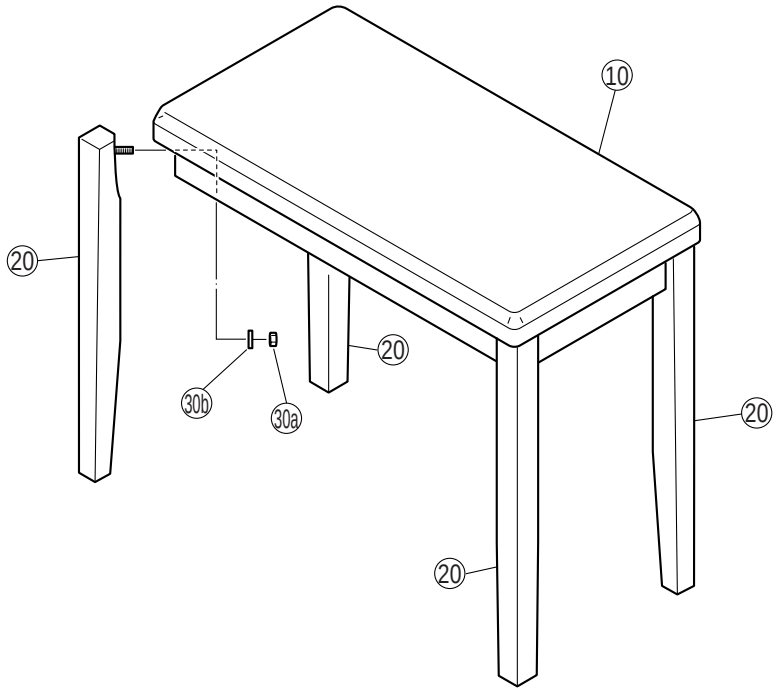


30 Screw set **（ネジセット）**

x 4 (03761250)
x 4 (03765820)

| REF NO. | PART NO. | DESCRIPTION | | 部品名 | REMARKS | QTY | RANK |
|---|---|---|---|---|---|---|---|
| | | BENCH | | 椅子 | CLP-115 | | |
| | -- | Bench | BC-100DR | 椅子集成 | (V553200) | | |
| 10 | **V5532900** | Bench Board Assembly | BC-100DR | 座板Ass'y | | | 16 |
| 20 | **V8176300** | Leg | | 脚柱集成 | | 4 | |
| 30 | **VS530500** | Screw Set | BC-XX | ネジセットAss'y | | | 03 |
| 30a | **03761250** | Hexagonal Nut | #1 10.0X1.25 MFZN2 | 六角ナット | | 4 | 01 |
| 30b | **03765820** | Spring Washer | #2 10.0 MFZN2Y | バネ座金 | | 4 | 01 |

*: New Parts **（新規部品）**

RANK: Japan only

# ■ ELECTRICAL PARTS

| REF NO. | PART NO. | DESCRIPTION | | 部品名 | REMARKS | QTY | RANK |
|---|---|---|---|---|---|---|---|
| | | ELECTRICAL PARTS | | 電気部品 | | | |
| | **V8910100** | Circuit Board | DM | DMシート | (XW980A0) | | 20 |
| | **V8910200** | Circuit Board | AM | AMシート | (XW981B0) | | 14 |
| | **V9456500** | Circuit Board | D-JACK | D-JACKシート | (V945640)(X2588B0) | | 08 |
| | **V9456600** | Circuit Board | PEDAL | PEDALシート | (V945640)(X2588B0) | | 03 |
| | **VZ705300** | Circuit Board | GH-D_SW H | GH-D_SWシートH | (XT241A0) | | 13 |
| | **VZ705200** | Circuit Board | GH-D_SW L | GH-D_SWシートL | (XT240A0) | | 12 |
| | **V9626700** | Circuit Board | HP | HPシート | (XU684A0,XV858A0)<br>(V962660) | | |
| | **V2337300** | Circuit Board | PEDAL(SW) | PEDAL（SW）シート | (V233740)(XR780B0) | | 07 |
| | **VN637600** | Circuit Board | PL(YCJ) | PLシート | (VN63740)(XL151B0) | | 03 |
| | **VU659100** | Circuit Board | PL(YMMA) | PLシート | (VU65900)(XR898A0) | | 03 |
| | **V8910400** | Circuit Board | PN | PNシート | (V891070)(X2638A0) | | 07 |
| | **V0011000** | Circuit Board | PS | PSシート（E） | E (V001150)(XU372E0) | | 11 |
| | **V0011100** | Circuit Board | PS | PSシート（N） | N (V001160)(XU372E0) | | 12 |
| | **V0010800** | Circuit Board | PS | PSシート（U） | U (V001140)(XU372E0) | | 11 |
| | | | | | | | |
| | **V8910100** | Circuit Board | DM | DMシート | (XW980A0) | | 20 |
| C0002 | **RD350000** | Carbon Resistor (chip) | 0 63M J | チップ抵抗 | | | 01 |
| C0003 | **US062100** | Ceramic Capacitor-SL(chip) | 100P 50V J | チップセラ（SL） | | | 01 |
| C0005 | **US062100** | Ceramic Capacitor-SL(chip) | 100P 50V J | チップセラ（SL） | | | 01 |
| C0008 | **US062100** | Ceramic Capacitor-SL(chip) | 100P 50V J | チップセラ（SL） | | | 01 |
| C0011 | **US062100** | Ceramic Capacitor-SL(chip) | 100P 50V J | チップセラ（SL） | | | 01 |
| C0014 | **US062100** | Ceramic Capacitor-SL(chip) | 100P 50V J | チップセラ（SL） | | | 01 |
| C0022 | **US064100** | Ceramic Capacitor-B (chip) | 0.0100 50V K | チップセラ（B） | | | 01 |
| C0026 | **UF037100** | Electrolytic Cap. (chip) | 10 16V | チップケミコン | | | 01 |
| C0027 | **US064100** | Ceramic Capacitor-B (chip) | 0.0100 50V K | チップセラ（B） | | | 01 |
| C0028 | **US064100** | Ceramic Capacitor-B (chip) | 0.0100 50V K | チップセラ（B） | | | 01 |
| C0029 | **UF037100** | Electrolytic Cap. (chip) | 10 16V | チップケミコン | | | 01 |
| C0030 | **US064100** | Ceramic Capacitor-B (chip) | 0.0100 50V K | チップセラ（B） | | | 01 |
| C0031 | **US064100** | Ceramic Capacitor-B (chip) | 0.0100 50V K | チップセラ（B） | | | 01 |
| C0032 | **UF037470** | Electrolytic Cap. (chip) | 47 16V | チップケミコン | | | 01 |
| -0034 | **UF037470** | Electrolytic Cap. (chip) | 47 16V | チップケミコン | | | 01 |
| C0035 | **UF037100** | Electrolytic Cap. (chip) | 10 16V | チップケミコン | | | 01 |
| C0036 | **US064100** | Ceramic Capacitor-B (chip) | 0.0100 50V K | チップセラ（B） | | | 01 |
| C0037 | **UF246470** | Electrolytic Cap.-BP (chip | 4.7 25V | チップBPコン | | | 01 |
| C0038 | **UF246470** | Electrolytic Cap.-BP (chip | 4.7 25V | チップBPコン | | | 01 |
| C0039 | **US064100** | Ceramic Capacitor-B (chip) | 0.0100 50V K | チップセラ（B） | | | 01 |
| C0040 | **UF037100** | Electrolytic Cap. (chip) | 10 16V | チップケミコン | | | 01 |
| C0041 | **US064100** | Ceramic Capacitor-B (chip) | 0.0100 50V K | チップセラ（B） | | | 01 |
| C0042 | **US062220** | Ceramic Capacitor-SL(chip) | 220P 50V J | チップセラ（SL） | | | 01 |
| C0043 | **UF037100** | Electrolytic Cap. (chip) | 10 16V | チップケミコン | | | 01 |
| C0044 | **US061220** | Ceramic Capacitor-CH(chip) | 22P 50V J | チップセラ（CH） | | | 01 |
| C0045 | **US061220** | Ceramic Capacitor-CH(chip) | 22P 50V J | チップセラ（CH） | | | 01 |
| C0046 | **US135100** | Ceramic Capacitor-F (chip) | 0.1000 16V Z | チップセラ（F） | | | 01 |
| C0047 | **US064100** | Ceramic Capacitor-B (chip) | 0.0100 50V K | チップセラ（B） | | | 01 |
| C0048 | **US064100** | Ceramic Capacitor-B (chip) | 0.0100 50V K | チップセラ（B） | | | 01 |
| C0049 | **UF017470** | Electrolytic Cap. (chip) | 47 6.3V | チップケミコン | | | 01 |
| C0050 | **US064100** | Ceramic Capacitor-B (chip) | 0.0100 50V K | チップセラ（B） | | | 01 |
| C0052 | **US064100** | Ceramic Capacitor-B (chip) | 0.0100 50V K | チップセラ（B） | | | 01 |
| C0053 | **US064100** | Ceramic Capacitor-B (chip) | 0.0100 50V K | チップセラ（B） | | | 01 |
| C0054 | **US135100** | Ceramic Capacitor-F (chip) | 0.1000 16V Z | チップセラ（F） | | | 01 |
| C0055 | **UF037470** | Electrolytic Cap. (chip) | 47 16V | チップケミコン | | | 01 |
| C0056 | **US062100** | Ceramic Capacitor-SL(chip) | 100P 50V J | チップセラ（SL） | | | 01 |
| C0057 | **UF037470** | Electrolytic Cap. (chip) | 47 16V | チップケミコン | | | 01 |
| C0058 | **US062100** | Ceramic Capacitor-SL(chip) | 100P 50V J | チップセラ（SL） | | | 01 |
| C0059 | **US064100** | Ceramic Capacitor-B (chip) | 0.0100 50V K | チップセラ（B） | | | 01 |
| C0060 | **US062100** | Ceramic Capacitor-SL(chip) | 100P 50V J | チップセラ（SL） | | | 01 |
| C0061 | **US062100** | Ceramic Capacitor-SL(chip) | 100P 50V J | チップセラ（SL） | | | 01 |
| C0062 | **UF037100** | Electrolytic Cap. (chip) | 10 16V | チップケミコン | | | 01 |
| C0063 | **RD350000** | Carbon Resistor (chip) | 0 63M J | チップ抵抗 | | | 01 |
| C0065 | **US062100** | Ceramic Capacitor-SL(chip) | 100P 50V J | チップセラ（SL） | | | 01 |
| C0066 | **US064100** | Ceramic Capacitor-B (chip) | 0.0100 50V K | チップセラ（B） | | | 01 |
| C0067 | **US062100** | Ceramic Capacitor-SL(chip) | 100P 50V J | チップセラ（SL） | | | 01 |
| -0069 | **US062100** | Ceramic Capacitor-SL(chip) | 100P 50V J | チップセラ（SL） | | | 01 |
| C0070 | **RD350000** | Carbon Resistor (chip) | 0 63M J | チップ抵抗 | | | 01 |
| C0071 | **RD350000** | Carbon Resistor (chip) | 0 63M J | チップ抵抗 | | | 01 |
| C0072 | **US062100** | Ceramic Capacitor-SL(chip) | 100P 50V J | チップセラ（SL） | | | 01 |
| C0073 | **US062100** | Ceramic Capacitor-SL(chip) | 100P 50V J | チップセラ（SL） | | | 01 |
| CN001 | **VB390300** | Connector Base Post | PH- 7P TE | コネクタベースポスト | | | 01 |

*: New Parts **（新規部品）**

RANK: Japan only

| | REF NO. | PART NO. | DESCRIPTION | | 部品名 | REMARKS | QTY | RANK |
|---|---|---|---|---|---|---|---|---|
| | CN002 | **VB390100** | Connector Base Post | PH- 5P TE | コネクタベースポスト | | | 01 |
| | CN003 | **VB390400** | Connector Base Post | PH- 8P TE | コネクタベースポスト | | | 01 |
| | CN004 | **VB390400** | Connector Base Post | PH- 8P TE | コネクタベースポスト | | | 01 |
| | CN005 | **VB390700** | Connector Base Post | PH-11P TE | コネクタベースポスト | | | 01 |
| | D0003 | **VV925900** | Diode | RLS-73 TE-11 | ダイオード | | | 01 |
| | IC001 | **XU947C00** | IC | HG73C205AFD | IC | SWX00B | | 09 |
| * | IC003 | **X0087A00** | IC | CY7C1021-12VCT | IC | SRAM 1M | | |
| | IC003 | **X0088B00** | IC | K6R1016C1D-JC12T00 | IC | SRAM 1M | | |
| | IC003 | **XZ635A00** | IC | IC61C6416-15K | IC | SRAM 1M | | 07 |
| | IC003 | **X3849A00** | IC | K6R1016C1D-JC10T00 | IC | SRAM 1M | | |
| | IC004 | **XP867A00** | IC | UPD63200GS-E1 | IC | D/A CONVERTER | | 07 |
| | IC007 | **XS516A00** | IC | UPC2933T-E1 | IC | REGULATOR +3.3V | | 03 |
| | IC008 | **XJ598A00** | IC | NJM78L05UA | IC | REGULATRO +5V | | 02 |
| | IC009 | **XW792A00** | IC | SN74HC132NSR | IC | NAND | | 02 |
| | IC009 | **XY352A00** | IC | MM74HC132SJX | IC | NAND | | 02 |
| | IC010 | **X2565100** | IC | K3N7C144YB-GC10T00 | IC | MASK ROM 64M | | 07 |
| | R0013 | **RD357470** | Carbon Resistor (chip) | 47.0K 63M J | チップ抵抗 | | | 01 |
| | R0014 | **RD357100** | Carbon Resistor (chip) | 10.0K 63M J | チップ抵抗 | | | 01 |
| | R0015 | **RD354470** | Carbon Resistor (chip) | 47.0 63M J | チップ抵抗 | | | 01 |
| | -0019 | **RD354470** | Carbon Resistor (chip) | 47.0 63M J | チップ抵抗 | | | 01 |
| | R0020 | **RD357470** | Carbon Resistor (chip) | 47.0K 63M J | チップ抵抗 | | | 01 |
| | R0021 | **RD357470** | Carbon Resistor (chip) | 47.0K 63M J | チップ抵抗 | | | 01 |
| | R0022 | **RD354470** | Carbon Resistor (chip) | 47.0 63M J | チップ抵抗 | | | 01 |
| | R0023 | **RD357100** | Carbon Resistor (chip) | 10.0K 63M J | チップ抵抗 | | | 01 |
| | -0025 | **RD357100** | Carbon Resistor (chip) | 10.0K 63M J | チップ抵抗 | | | 01 |
| | R0026 | **RD350000** | Carbon Resistor (chip) | 0 63M J | チップ抵抗 | | | 01 |
| | -0028 | **RD350000** | Carbon Resistor (chip) | 0 63M J | チップ抵抗 | | | 01 |
| | R0029 | **RD354470** | Carbon Resistor (chip) | 47.0 63M J | チップ抵抗 | | | 01 |
| | R0030 | **RD354470** | Carbon Resistor (chip) | 47.0 63M J | チップ抵抗 | | | 01 |
| | R0032 | **RD357470** | Carbon Resistor (chip) | 47.0K 63M J | チップ抵抗 | | | 01 |
| | R0033 | **RD357470** | Carbon Resistor (chip) | 47.0K 63M J | チップ抵抗 | | | 01 |
| | R0034 | **RD354470** | Carbon Resistor (chip) | 47.0 63M J | チップ抵抗 | | | 01 |
| | R0035 | **RD355100** | Carbon Resistor (chip) | 100.0 63M J | チップ抵抗 | | | 01 |
| | R0036 | **RD355330** | Carbon Resistor (chip) | 330.0 63M J | チップ抵抗 | | | 01 |
| | R0037 | **RD357100** | Carbon Resistor (chip) | 10.0K 63M J | チップ抵抗 | | | 01 |
| | R0038 | **RD357100** | Carbon Resistor (chip) | 10.0K 63M J | チップ抵抗 | | | 01 |
| | R0039 | **RD356100** | Carbon Resistor (chip) | 1.0K 63M J | チップ抵抗 | | | 01 |
| | R0040 | **RD357100** | Carbon Resistor (chip) | 10.0K 63M J | チップ抵抗 | | | 01 |
| | R0041 | **RD358470** | Carbon Resistor (chip) | 470.0K 63M J | チップ抵抗 | | | 01 |
| | R0042 | **RD358470** | Carbon Resistor (chip) | 470.0K 63M J | チップ抵抗 | | | 01 |
| | R0043 | **RD355100** | Carbon Resistor (chip) | 100.0 63M J | チップ抵抗 | | | 01 |
| | -0046 | **RD355100** | Carbon Resistor (chip) | 100.0 63M J | チップ抵抗 | | | 01 |
| | R0047 | **RD357220** | Carbon Resistor (chip) | 22.0K 63M J | チップ抵抗 | | | 01 |
| | R0048 | **RD357100** | Carbon Resistor (chip) | 10.0K 63M J | チップ抵抗 | | | 01 |
| | R0049 | **RD357220** | Carbon Resistor (chip) | 22.0K 63M J | チップ抵抗 | | | 01 |
| | R0050 | **RD357100** | Carbon Resistor (chip) | 10.0K 63M J | チップ抵抗 | | | 01 |
| | R0051 | **RD356100** | Carbon Resistor (chip) | 1.0K 63M J | チップ抵抗 | | | 01 |
| | R0052 | **RD356820** | Carbon Resistor (chip) | 8.2K 63M J | チップ抵抗 | | | 01 |
| | R0053 | **RD356270** | Carbon Resistor (chip) | 2.7K 63M J | チップ抵抗 | | | 01 |
| | R0054 | **RD357100** | Carbon Resistor (chip) | 10.0K 63M J | チップ抵抗 | | | 01 |
| | R0058 | **RD354470** | Carbon Resistor (chip) | 47.0 63M J | チップ抵抗 | | | 01 |
| | -0090 | **RD354470** | Carbon Resistor (chip) | 47.0 63M J | チップ抵抗 | | | 01 |
| | R0091 | **RD355220** | Carbon Resistor (chip) | 220.0 63M J | チップ抵抗 | | | 01 |
| | R0093 | **RD354470** | Carbon Resistor (chip) | 47.0 63M J | チップ抵抗 | | | 01 |
| | R0096 | **RD355390** | Carbon Resistor (chip) | 390.0 63M J | チップ抵抗 | | | 01 |
| | R0097 | **RD355390** | Carbon Resistor (chip) | 390.0 63M J | チップ抵抗 | | | 01 |
| | R0100 | **RD354470** | Carbon Resistor (chip) | 47.0 63M J | チップ抵抗 | | | 01 |
| | R0101 | **RD354470** | Carbon Resistor (chip) | 47.0 63M J | チップ抵抗 | | | 01 |
| | R0102 | **RD350000** | Carbon Resistor (chip) | 0 63M J | チップ抵抗 | | | 01 |
| | TR001 | **VV556400** | Transistor | 2SC2412K Q,R,S | トランジスタ | | | 01 |
| | TR002 | **VJ927200** | Transistor | 2SA1162 O,Y | トランジスタ | | | 01 |
| | X0001 | **VZ703600** | Quartz Crystal Unit | 8.4672M SMD-49 | 水晶振動子 | | | 03 |
| | | | | | | | | |
| | | **V8910200** | Circuit Board | AM | AMシート | (XW981B0) | | 14 |
| | | **--** | Wire Harness | | MUTE線材 | (WB56840) | | |
| | | **--** | Jumper Wire | 0.55 | ジャンパー線 | (VD04170) | | |
| | | **VE683000** | Bind Head Tapping Screw-B | 3.0X12 MFZN2Y | +バインドBタイト | | | 01 |
| | HS | **--** | Heat sink | | 放熱板 IES53 | (V506910) | | |
| | MFA | **V5184100** | Holder, A | | パワーアンプ固定金具A | | | 03 |
| | C0007 | **UR848100** | Electrolytic Cap. | 100.00 25.0V | ケミコン | | | 01 |

*: New Parts **(新規部品)**

RANK: Japan only

| REF NO. | PART NO. | DESCRIPTION | | 部品名 | REMARKS | QTY | RANK |
|---|---|---|---|---|---|---|---|
| C0008 | **UR848220** | Electrolytic Cap. | 220.00 25.0V | ケミコン | | | 01 |
| C0010 | **US064100** | Ceramic Capacitor-B (chip) | 0.0100 50V K | チップセラ（B） | | | 01 |
| C0013 | **UN866100** | Electrolytic Cap.-BP | 1.00 50.0V | BPケミコン | | | 01 |
| C0014 | **UN866100** | Electrolytic Cap.-BP | 1.00 50.0V | BPケミコン | | | 01 |
| C0015 | **US064100** | Ceramic Capacitor-B (chip) | 0.0100 50V K | チップセラ（B） | | | 01 |
| C0016 | **US064100** | Ceramic Capacitor-B (chip) | 0.0100 50V K | チップセラ（B） | | | 01 |
| C0017 | **UR848100** | Electrolytic Cap. | 100.00 25.0V | ケミコン | | | 01 |
| C0018 | **UR828470** | Electrolytic Cap. | 470.00 10.0V | ケミコン | | | 01 |
| C0019 | **UR828470** | Electrolytic Cap. | 470.00 10.0V | ケミコン | | | 01 |
| C0020 | **VR169400** | Monolithic Mylar Capacitor | ECQ-V1H684JL3 | 積層マイラーコン | | | |
| C0021 | **VR169300** | Monolithic Mylar Capacitor | ECQ-V1H564JL3 | 積層マイラーコン | | | 01 |
| C0022 | **UA354390** | Mylar Capacitor | 0.0390 50V J | マイラーコン | | | 01 |
| C0023 | **UA354220** | Mylar Capacitor | 0.0220 50V J | マイラーコン | | | |
| C0024 | **UA353560** | Mylar Capacitor | 5600P 50V J | マイラーコン | | | |
| C0025 | **VR169400** | Monolithic Mylar Capacitor | ECQ-V1H684JL3 | 積層マイラーコン | | | |
| C0026 | **VR169300** | Monolithic Mylar Capacitor | ECQ-V1H564JL3 | 積層マイラーコン | | | 01 |
| C0027 | **UA354390** | Mylar Capacitor | 0.0390 50V J | マイラーコン | | | 01 |
| C0028 | **UA354220** | Mylar Capacitor | 0.0220 50V J | マイラーコン | | | |
| C0029 | **UA353560** | Mylar Capacitor | 5600P 50V J | マイラーコン | | | |
| C0030 | **US062100** | Ceramic Capacitor-SL(chip) | 100P 50V J | チップセラ（SL） | | | 01 |
| C0031 | **US062100** | Ceramic Capacitor-SL(chip) | 100P 50V J | チップセラ（SL） | | | 01 |
| C0032 | **VR167100** | Monolithic Mylar Capacitor | ECQ-V1H184JLW | 積層マイラーコン | | | 01 |
| C0033 | **UA354220** | Mylar Capacitor | 0.0220 50V J | マイラーコン | | | |
| C0034 | **UA354680** | Mylar Capacitor | 0.0680 50V J | マイラーコン | | | 01 |
| C0035 | **UA354390** | Mylar Capacitor | 0.0390 50V J | マイラーコン | | | 01 |
| C0036 | **UA653180** | Mylar Capacitor | 1800P 50V J | マイラーコン | | | 01 |
| C0037 | **VR167100** | Monolithic Mylar Capacitor | ECQ-V1H184JLW | 積層マイラーコン | | | 01 |
| C0038 | **UA354220** | Mylar Capacitor | 0.0220 50V J | マイラーコン | | | |
| C0039 | **UA354680** | Mylar Capacitor | 0.0680 50V J | マイラーコン | | | 01 |
| C0040 | **UA354390** | Mylar Capacitor | 0.0390 50V J | マイラーコン | | | 01 |
| C0041 | **UA653180** | Mylar Capacitor | 1800P 50V J | マイラーコン | | | 01 |
| C0045 | **US064100** | Ceramic Capacitor-B (chip) | 0.0100 50V K | チップセラ（B） | | | 01 |
| C0046 | **UR837470** | Electrolytic Cap. | 47.00 16.0V | ケミコン | | | 01 |
| C0047 | **US064100** | Ceramic Capacitor-B (chip) | 0.0100 50V K | チップセラ（B） | | | 01 |
| C0048 | **UR837470** | Electrolytic Cap. | 47.00 16.0V | ケミコン | | | 01 |
| C0049 | **US062470** | Ceramic Capacitor-SL(chip) | 470P 50V J | チップセラ（SL） | | | 01 |
| C0050 | **US062470** | Ceramic Capacitor-SL(chip) | 470P 50V J | チップセラ（SL） | | | 01 |
| C0051 | **UR866100** | Electrolytic Cap. | 1.00 50.0V | ケミコン | | | 01 |
| C0052 | **UR866100** | Electrolytic Cap. | 1.00 50.0V | ケミコン | | | 01 |
| C0058 | **VE327200** | Monolithic Mylar Capacitor | 1.0 50V J | 積層マイラーコン | | | 02 |
| C0058 | **VU838100** | Monolithic Mylar Capacitor | 1.0000 50V J | 積層マイラーコン | | | |
| C0059 | **VE327200** | Monolithic Mylar Capacitor | 1.0 50V J | 積層マイラーコン | | | 02 |
| C0059 | **VU838100** | Monolithic Mylar Capacitor | 1.0000 50V J | 積層マイラーコン | | | |
| C0060 | **US063100** | Ceramic Capacitor-B (chip) | 1000P 50V K | チップセラ（B） | | | 01 |
| C0061 | **US063100** | Ceramic Capacitor-B (chip) | 1000P 50V K | チップセラ（B） | | | 01 |
| C0062 | **UR837220** | Electrolytic Cap. | 22.00 16.0V | ケミコン | | | 01 |
| C0063 | **UR837220** | Electrolytic Cap. | 22.00 16.0V | ケミコン | | | 01 |
| C0064 | **UR848220** | Electrolytic Cap. | 220.00 25.0V | ケミコン | | | 01 |
| C0065 | **UR847470** | Electrolytic Cap. | 47.00 25.0V | ケミコン | | | 01 |
| C0066 | **US035100** | Ceramic Capacitor-B (chip) | 0.1000 16V K | チップセラ（B） | | | 01 |
| -0073 | **US035100** | Ceramic Capacitor-B (chip) | 0.1000 16V K | チップセラ（B） | | | 01 |
| C0074 | **US135100** | Ceramic Capacitor-F (chip) | 0.1000 16V Z | チップセラ（F） | | | 01 |
| C0075 | **US135100** | Ceramic Capacitor-F (chip) | 0.1000 16V Z | チップセラ（F） | | | 01 |
| C0076 | **US064100** | Ceramic Capacitor-B (chip) | 0.0100 50V K | チップセラ（B） | | | 01 |
| C0077 | **US064100** | Ceramic Capacitor-B (chip) | 0.0100 50V K | チップセラ（B） | | | 01 |
| CN001 | **LB918050** | Base Post Connector | XH 5P TE | ベーススツキポスト | | | 01 |
| CN002 | **VB390700** | Connector Base Post | PH-11P TE | コネクタベースポスト | | | 01 |
| CN003 | **LB932040** | Base Post Connector | VH- 4P TE | ベースポスト | | | 01 |
| CN004 | **LB918070** | Base Post Connector | XH 7P TE | ベーススツキポスト | | | 01 |
| CN005 | **VB390400** | Connector Base Post | PH- 8P TE | コネクタベースポスト | | | 01 |
| D0002 | **VV925900** | Diode | RLS-73 TE-11 | ダイオード | | | 01 |
| IC001 | **XU387A00** | IC | UPC24M12AHF | IC | REGULATOR +12V | | 03 |
| IC002 | **XR925A00** | IC | SI-8401L | IC | REGULATOR +5V 0.5A | | 05 |
| IC003 | **XU131A00** | IC | TA8233H | IC | POWER AMP 30Wx2 BTL | | 06 |
| IC004 | **XT773A00** | IC | M5227FP | IC | 5 BANDS GRAPHIC EQUALIZER | | 03 |
| IC005 | **XT773A00** | IC | M5227FP | IC | 5 BANDS GRAPHIC EQUALIZER | | 03 |
| IC007 | **XF291A00** | IC | UPC4570G2 | IC | OP AMP | | 03 |
| R0007 | **RD356680** | Carbon Resistor (chip) | 6.8K 63M J | チップ抵抗 | | | 01 |
| R0008 | **RD356680** | Carbon Resistor (chip) | 6.8K 63M J | チップ抵抗 | | | 01 |
| R0009 | **RD357330** | Carbon Resistor (chip) | 33.0K 63M J | チップ抵抗 | | | 01 |

*: New Parts **（新規部品）**

RANK: Japan only

| REF NO. | PART NO. | DESCRIPTION | | 部品名 | REMARKS | QTY | RANK |
|---|---|---|---|---|---|---|---|
| R0010 | **RD357330** | Carbon Resistor (chip) | 33.0K 63M J | チップ抵抗 | | | 01 |
| R0011 | **RD356470** | Carbon Resistor (chip) | 4.7K 63M J | チップ抵抗 | | | 01 |
| R0012 | **RD356470** | Carbon Resistor (chip) | 4.7K 63M J | チップ抵抗 | | | 01 |
| R0013 | **HF457180** | Carbon Resistor | 18.0K 1/4 J | カーボン抵抗 | | | 01 |
| R0014 | **HF455180** | Carbon Resistor | 180.0 1/4 J | カーボン抵抗 | | | 01 |
| R0015 | **HF456270** | Carbon Resistor | 2.7K 1/4 J | カーボン抵抗 | | | 01 |
| R0016 | **HF456150** | Carbon Resistor | 1.5K 1/4 J | カーボン抵抗 | | | 01 |
| R0017 | **HF457180** | Carbon Resistor | 18.0K 1/4 J | カーボン抵抗 | | | 01 |
| R0018 | **HF457180** | Carbon Resistor | 18.0K 1/4 J | カーボン抵抗 | | | 01 |
| R0019 | **HF455180** | Carbon Resistor | 180.0 1/4 J | カーボン抵抗 | | | 01 |
| R0020 | **HF456270** | Carbon Resistor | 2.7K 1/4 J | カーボン抵抗 | | | 01 |
| R0021 | **HF456150** | Carbon Resistor | 1.5K 1/4 J | カーボン抵抗 | | | 01 |
| R0022 | **HF457180** | Carbon Resistor | 18.0K 1/4 J | カーボン抵抗 | | | 01 |
| R0023 | **HF456180** | Carbon Resistor | 1.8K 1/4 J | カーボン抵抗 | | | 01 |
| R0024 | **HF457150** | Carbon Resistor | 15.0K 1/4 J | カーボン抵抗 | | | 01 |
| R0025 | **HF457220** | Carbon Resistor | 22.0K 1/4 J | カーボン抵抗 | | | 01 |
| R0026 | **HF457180** | Carbon Resistor | 18.0K 1/4 J | カーボン抵抗 | | | 01 |
| R0027 | **HF456100** | Carbon Resistor | 1.0K 1/4 J | カーボン抵抗 | | | 01 |
| R0028 | **HF456180** | Carbon Resistor | 1.8K 1/4 J | カーボン抵抗 | | | 01 |
| R0029 | **HF457150** | Carbon Resistor | 15.0K 1/4 J | カーボン抵抗 | | | 01 |
| R0030 | **HF457220** | Carbon Resistor | 22.0K 1/4 J | カーボン抵抗 | | | 01 |
| R0031 | **HF457180** | Carbon Resistor | 18.0K 1/4 J | カーボン抵抗 | | | 01 |
| R0032 | **HF456100** | Carbon Resistor | 1.0K 1/4 J | カーボン抵抗 | | | 01 |
| R0033 | **RD356330** | Carbon Resistor (chip) | 3.3K 63M J | チップ抵抗 | | | 01 |
| R0034 | **RD356330** | Carbon Resistor (chip) | 3.3K 63M J | チップ抵抗 | | | 01 |
| R0039 | **RD356560** | Carbon Resistor (chip) | 5.6K 63M J | チップ抵抗 | | | 01 |
| R0040 | **RD356560** | Carbon Resistor (chip) | 5.6K 63M J | チップ抵抗 | | | 01 |
| R0041 | **RD356100** | Carbon Resistor (chip) | 1.0K 63M J | チップ抵抗 | | | 01 |
| R0042 | **RD356100** | Carbon Resistor (chip) | 1.0K 63M J | チップ抵抗 | | | 01 |
| R0043 | **RD355560** | Carbon Resistor (chip) | 560.0 63M J | チップ抵抗 | | | 01 |
| R0044 | **RD355560** | Carbon Resistor (chip) | 560.0 63M J | チップ抵抗 | | | 01 |
| R0046 | **HF453220** | Carbon Resistor | 2.2 1/4 J | カーボン抵抗 | | | 01 |
| -0049 | **HF453220** | Carbon Resistor | 2.2 1/4 J | カーボン抵抗 | | | 01 |
| R0050 | **RD356470** | Carbon Resistor (chip) | 4.7K 63M J | チップ抵抗 | | | 01 |
| R0051 | **RD356560** | Carbon Resistor (chip) | 5.6K 63M J | チップ抵抗 | | | 01 |
| R0052 | **RD356560** | Carbon Resistor (chip) | 5.6K 63M J | チップ抵抗 | | | 01 |
| R0053 | **RD356330** | Carbon Resistor (chip) | 3.3K 63M J | チップ抵抗 | | | 01 |
| R0054 | **RD357330** | Carbon Resistor (chip) | 33.0K 63M J | チップ抵抗 | | | 01 |
| R0064 | **HF455560** | Carbon Resistor | 560.0 1/4 J | カーボン抵抗 | | | 01 |
| R0065 | **HF455560** | Carbon Resistor | 560.0 1/4 J | カーボン抵抗 | | | 01 |
| RY002 | **VK881200** | Relay | DC G5Z-2A-YA | リレー　１２Ｖ | | | 04 |
| TR001 | **VV556400** | Transistor | 2SC2412K Q,R,S | トランジスタ | | | 01 |
| | | | | | | | |
| | **V9456500** | Circuit Board | D-JACK | Ｄ－ＪＡＣＫシート | (V945640)(X2588B0) | | 08 |
| | **V9456600** | Circuit Board | PEDAL | ＰＥＤＡＬシート | (V945640)(X2588B0) | | 03 |
| C0002 | **US064100** | Ceramic Capacitor-B (chip) | 0.0100 50V K | チップセラ（Ｂ） | | | 01 |
| C0005 | **UR837100** | Electrolytic Cap. | 10.00 16.0V | ケミコン | | | 01 |
| C0010 | **US064100** | Ceramic Capacitor-B (chip) | 0.0100 50V K | チップセラ（Ｂ） | | | 01 |
| C0013 | **US064100** | Ceramic Capacitor-B (chip) | 0.0100 50V K | チップセラ（Ｂ） | | | 01 |
| C0021 | **US064100** | Ceramic Capacitor-B (chip) | 0.0100 50V K | チップセラ（Ｂ） | | | 01 |
| C0022 | **US064100** | Ceramic Capacitor-B (chip) | 0.0100 50V K | チップセラ（Ｂ） | | | 01 |
| CN001 | **VB390400** | Connector Base Post | PH- 8P TE | コネクタベースポスト | | | 01 |
| CN002 | **VB390100** | Connector Base Post | PH- 5P TE | コネクタベースポスト | | | 01 |
| D0001 | **VV925900** | Diode | RLS-73 TE-11 | ダイオード | | | 01 |
| IC003 | **VD473200** | Photo Coupler | 6N137 | フォトカプラ | | | 05 |
| JK001 | **VT202500** | DIN Connector | 5P YKF51-50 | ＤＩＮコネクタ | MIDI IN | | 01 |
| JK002 | **VT202500** | DIN Connector | 5P YKF51-50 | ＤＩＮコネクタ | MIDI OUT | | 01 |
| JK003 | **VT202500** | DIN Connector | 5P YKF51-50 | ＤＩＮコネクタ | MIDI THRU | | 01 |
| JK005 | **V4874800** | DIN Connector | DIN6P MD-S613 | 複合コネクタ | PEDAL | | 02 |
| L0003 | **VY657200** | Chip Inductance | 600 BK1608HM601 | チップインダクタ | | | 01 |
| L0004 | **RD350000** | Carbon Resistor (chip) | 0 63M J | チップ抵抗 | | | 01 |
| L0005 | **VY657200** | Chip Inductance | 600 BK1608HM601 | チップインダクタ | | | 01 |
| -0012 | **VY657200** | Chip Inductance | 600 BK1608HM601 | チップインダクタ | | | 01 |
| R0012 | **RD356100** | Carbon Resistor (chip) | 1.0K 63M J | チップ抵抗 | | | 01 |
| R0016 | **RD357100** | Carbon Resistor (chip) | 10.0K 63M J | チップ抵抗 | | | 01 |
| R0017 | **RD357220** | Carbon Resistor (chip) | 22.0K 63M J | チップ抵抗 | | | 01 |
| R0018 | **RD357220** | Carbon Resistor (chip) | 22.0K 63M J | チップ抵抗 | | | 01 |
| R0019 | **RD357100** | Carbon Resistor (chip) | 10.0K 63M J | チップ抵抗 | | | 01 |
| R0020 | **RD356150** | Carbon Resistor (chip) | 1.5K 63M J | チップ抵抗 | | | 01 |
| R0022 | **RD357220** | Carbon Resistor (chip) | 22.0K 63M J | チップ抵抗 | | | 01 |

*: New Parts **（新規部品）**　　RANK: Japan only

| REF NO. | PART NO. | DESCRIPTION | | 部品名 | REMARKS | QTY | RANK |
|---|---|---|---|---|---|---|---|
| R0023 | **RD356150** | Carbon Resistor (chip) | 1.5K 63M J | チップ抵抗 | | | 01 |
| R0024 | **RD355220** | Carbon Resistor (chip) | 220.0 63M J | チップ抵抗 | | | 01 |
| R0025 | **RD154470** | Carbon Resistor (chip) | 47.0 1/4 J | チップ抵抗 | | | 01 |
| -0028 | **RD154470** | Carbon Resistor (chip) | 47.0 1/4 J | チップ抵抗 | | | 01 |
| R0033 | **RD350000** | Carbon Resistor (chip) | 0 63M J | チップ抵抗 | | | 01 |
| -0035 | **RD350000** | Carbon Resistor (chip) | 0 63M J | チップ抵抗 | | | 01 |
| TR001 | **VV556400** | Transistor | 2SC2412K Q,R,S | トランジスタ | | | 01 |
| -004 | **VV556400** | Transistor | 2SC2412K Q,R,S | トランジスタ | | | 01 |
| | | | | | | | |
| | **VZ705300** | Circuit Board | GH-D_SW H | GH－D＿SWシートH | (XT241A0) | | 13 |
| CN1 | **VB390500** | Connector Base Post | PH- 9P TE | コネクタベースポスト | | | 03 |
| CN2 | **VB390800** | Connector Base Post | PH-12P TE | コネクタベースポスト | | | 01 |
| D1 | **VB941200** | Diode | 1SS133,1SS176 | ダイオード | | | 01 |
| -108 | **VB941200** | Diode | 1SS133,1SS176 | ダイオード | | | 01 |
| | **--** | Dust Proof Cloth | | 不織布 | (VU45980) | | |
| | | | | | | | |
| | **VZ705200** | Circuit Board | GH-D_SW L | GH－D＿SWシートL | (XT240A0) | | 12 |
| | **XR632A00** | IC | YMZ702-D | KSN2 | KSN2 | | 09 |
| | **--** | Dust Proof Cloth | | 不織布 | (VU45960) | | |
| C1 | **FG644100** | Electrolytic Cap. | 0.0100 50V Z | セラコン（F） | | | 01 |
| -3 | **FG644100** | Electrolytic Cap. | 0.0100 50V Z | セラコン（F） | | | 01 |
| C5 | **VF760000** | Electrolytic Cap.-KS | 100.00 10.0V | ケミコンKS | | | 01 |
| CL1 | **VI653000** | Ceramic Resonator | CSTLA4M00G58Y02-B0 | セラミック振動子 | | | 01 |
| CN1 | **VB390400** | Connector Base Post | PH- 8P TE | コネクタベースポスト | | | 01 |
| CN2 | **VB390500** | Connector Base Post | PH- 9P TE | コネクタベースポスト | | | 03 |
| CN3 | **VB390800** | Connector Base Post | PH-12P TE | コネクタベースポスト | | | 01 |
| D5 | **VB941200** | Diode | 1SS133,1SS176 | ダイオード | | | 01 |
| -72 | **VB941200** | Diode | 1SS133,1SS176 | ダイオード | | | 01 |
| J1 | **--** | Jumper Wire | 0.55 | ジャンパー線 | (VD04170) | | |
| J2 | **--** | Jumper Wire | 0.55 | ジャンパー線 | (VD04170) | | |
| R1 | **HF759100** | Carbon Resistor | 1.0M 1/4 J | カーボン抵抗 | | | 01 |
| R2 | **HF755100** | Carbon Resistor | 100.0 1/4 J | カーボン抵抗 | | | 01 |
| R3 | **HF755100** | Carbon Resistor | 100.0 1/4 J | カーボン抵抗 | | | 01 |
| R4 | **HF756100** | Carbon Resistor | 1.0K 1/4 J | カーボン抵抗 | | | 01 |
| RA1 | **VU483500** | Resistor Array | RGLD12X103J | 抵抗アレイ | | | 01 |
| | | | | | | | |
| | **V9626700** | Circuit Board | HP | HPシート | (XU684A0,XV858A0)<br>(V962660) | | |
| C0001 | **--** | Jumper Wire | 0.55 | ジャンパー線 | (VD04170) | | |
| C0002 | **UN866220** | Electrolytic Cap.-BP | 2.20 50.0V | BPケミコン | | | 01 |
| -0005 | **UN866220** | Electrolytic Cap.-BP | 2.20 50.0V | BPケミコン | | | 01 |
| C0006 | **UN838100** | Electrolytic Cap.-BP | 100.00 16.0V | BPケミコン | | | 01 |
| C0007 | **UN838100** | Electrolytic Cap.-BP | 100.00 16.0V | BPケミコン | | | 01 |
| CN001 | **LB919070** | Base Post Connector | XH 7P SE | ベースツキポスト | | | 01 |
| CN002 | **VB858100** | Connector Base Post | PH- 2P SE | コネクタベースポスト | | | 01 |
| FL001 | **VB971100** | Coil | FL5R200QN | コイル 200U | | | 01 |
| FL002 | **VB971100** | Coil | FL5R200QN | コイル 200U | | | 01 |
| FL003 | **GE300670** | Ferrite Bead | BL02RN2-R62T4 | フェライトビーズ | | | 02 |
| FL003 | **VB871100** | Ferrite Bead | BL02RN2-R62 | フェライトビーズ | | | 01 |
| FL004 | **VB971100** | Coil | FL5R200QN | コイル 200U | | | 01 |
| FL005 | **VB971100** | Coil | FL5R200QN | コイル 200U | | | 01 |
| FL006 | **GE300670** | Ferrite Bead | BL02RN2-R62T4 | フェライトビーズ | | | 02 |
| FL006 | **VB871100** | Ferrite Bead | BL02RN2-R62 | フェライトビーズ | | | 01 |
| HP001 | **LB101870** | Phone Jack | YKB21-5006 | ホーンコネクタ | PHONES | | 03 |
| HP002 | **LB101870** | Phone Jack | YKB21-5006 | ホーンコネクタ | PHONES | | 03 |
| R0001 | **VC731500** | Metal Oxide Film Resistor | 120.0 1W J | 酸化金属被膜抵抗 | | | 01 |
| -0004 | **VC731500** | Metal Oxide Film Resistor | 120.0 1W J | 酸化金属被膜抵抗 | | | 01 |
| R0005 | **HF455390** | Carbon Resistor | 390.0 1/4 J | カーボン抵抗 | | | 01 |
| R0006 | **HF455390** | Carbon Resistor | 390.0 1/4 J | カーボン抵抗 | | | 01 |
| | | | | | | | |
| | **V2337300** | Circuit Board | PEDAL(SW) | PEDAL（SW）シート | (V233740)(XR780B0) | | 07 |
| | **--** | Jumper Wire | 0.55 | ジャンパー線 | (VD04170) | | |
| CN1 | **VB390200** | Connector Base Post | PH- 6P TE | コネクタベースポスト | | | 01 |
| F.GND | **--** | GND Wire | L=30 | アース束線 | (VZ01760) | | |
| | | | | | | | |
| | **VN637600** | Circuit Board | PL(YCJ) | PLシート | (VN63740)(XL151B0) | | 03 |
| | **VB858100** | Connector Base Post | PH- 2P SE | コネクタベースポスト | | | 01 |
| | **VD180000** | LED | SLZ-190B-03 RE | LED | POWER | | 01 |
| | | | | | | | |
| | **VU659100** | Circuit Board | PL(YMMA) | PLシート | (VU65900)(XR898A0) | | 03 |

*: New Parts **（新規部品）**

RANK: Japan only

| REF NO. | PART NO. | DESCRIPTION | | 部品名 | REMARKS | QTY | RANK |
|---|---|---|---|---|---|---|---|
| | **VB858100** | Connector Base Post | PH- 2P SE | コネクタベースポスト | | | 01 |
| | **VD180000** | LED | SLZ-190B-03 RE | LED | POWER | | 01 |
| | **V8910400** | Circuit Board | PN | PNシート | (V891070)(X2638A0) | | 07 |
| CN001 | **VB858600** | Connector Base Post | PH- 7P SE | コネクタベースポスト | | | 01 |
| CN002 | **VB858700** | Connector Base Post | PH- 8P SE | コネクタベースポスト | | | 01 |
| LD001 | **VU067800** | LED | SEL6210S-TP5 RE | LED | DEMO | | 01 |
| LD002 | **VU067800** | LED | SEL6210S-TP5 RE | LED | METRONOME | | 01 |
| SW001 | **VV439800** | Tact Switch | SKQNAJ | タクトSW | DEMO | | 01 |
| SW002 | **VV439800** | Tact Switch | SKQNAJ | タクトSW | METRONOME | | 01 |
| SW003 | **VV439800** | Tact Switch | SKQNAJ | タクトSW | VOICE | | 01 |
| VR001 | **V0075800** | Rotary Variable Resistor | A10.0K RK14K1240 | 二連ロータリーVR | MASTER VOLUME | | 03 |
| | **V0011000** | Circuit Board | PS | PSシート（E） | E (V001150)(XU372E0) | | 11 |
| | **V0011100** | Circuit Board | PS | PSシート（N） | N (V001160)(XU372E0) | | 12 |
| | **V0010800** | Circuit Board | PS | PSシート（U） | U (V001140)(XU372E0) | | 11 |
| | **VT308100** | AC Inlet | CCT9302-0101M | ACインレット 2P | E,N | | 02 |
| | **VT308200** | AC Inlet | CCT9302-0201 | ACインレット 2P | U | | 02 |
| | **--** | Jumper Wire | 0.55 | ジャンパー線 | (VD04170) | | |
| | **LB201530** | Fuse Holder | PC-PH1 | ヒューズホルダ | U,E | | 01 |
| | **LB201530** | Fuse Holder | PC-PH1 | ヒューズホルダ | N | | 01 |
| | **VT139600** | Voltage Selector | M1684-E | 電圧切替器 | N | | 04 |
| ⚠ C1 | **FI383470** | Capacitor | 4700P 400V U.C.S.V | 規格認定コン | | | 01 |
| ⚠ C1 | **VY675100** | Capacitor | 4700P 250V J.U.C.S | 規格認定コン KH | | | 01 |
| ⚠ C2 | **FI383470** | Capacitor | 4700P 400V U.C.S.V | 規格認定コン | | | 01 |
| ⚠ C2 | **VY675100** | Capacitor | 4700P 250V J.U.C.S | 規格認定コン KH | | | 01 |
| ⚠ C3 | **VY675000** | Capacitor | 0.010 250V J.U.C.S | 規格認定コン KH | | | 01 |
| ⚠ C3 | **VT575200** | Capacitor | 0.01 400V J.U.C.S | 規格認定コン KC | | | 01 |
| C4 | **UA654470** | Mylar Capacitor | 0.0470 50V J | マイラーコン | | | 01 |
| C5 | **V2126200** | Electrolytic Cap. | 10000 25.0V | ケミコン | | | 04 |
| C6 | **UJ866330** | Electrolytic Cap. | 3.30 50.0V | ケミコン | | | 01 |
| CN1 | **LB932030** | Base Post Connector | VH- 3P TE | ベースポスト | | | 01 |
| CN2 | **LB918050** | Base Post Connector | XH 5P TE | ベーストツキポスト | | | 01 |
| D1 | **V7803100** | Diode | 1T4-T/A52 | ダイオード | | | |
| D1 | **V9362200** | Diode | 1T4-T/A26 | ダイオード | | | |
| D1 | **VB481900** | Diode | 11ES4 | ダイオード | | | 01 |
| D1 | **VF195600** | Diode | 11ES4 TA1 | ダイオード | | | 01 |
| D2 | **V7803100** | Diode | 1T4-T/A52 | ダイオード | | | |
| D2 | **V9362200** | Diode | 1T4-T/A26 | ダイオード | | | |
| D2 | **VB481900** | Diode | 11ES4 | ダイオード | | | 01 |
| D2 | **VF195600** | Diode | 11ES4 TA1 | ダイオード | | | 01 |
| DB1 | **VN011300** | Diode Stack | D3SBA20 4.0A 200V | ダイオードスタック | | | 03 |
| ⚠ F1 | **KB003040** | Fuse | 1.00A S | ヒューズ | E | | 01 |
| ⚠ F1 | **KB003570** | Fuse | 2.00A JU | ヒューズ | U,N | | 01 |
| ⚠ F2 | **KB003040** | Fuse | 1.00A S | ヒューズ | N | | 01 |
| ⚠ F3 | **KB003240** | Fuse | 5.00A S | ヒューズ | E,N | | 01 |
| ⚠ F3 | **KB003630** | Fuse | 5.00A JU | ヒューズ | U | | 01 |
| J1 | **--** | Jumper Wire | 0.55 | ジャンパー線 | E (VD04170) | | |
| J2 | **--** | Jumper Wire | 0.55 | ジャンパー線 | U (VD04170) | | |
| ⚠ L1 | **VF790900** | Coil | SU10V-D20010 | コイル 10U | | | 03 |
| R1 | **HF456100** | Carbon Resistor | 1.0K 1/4 J | カーボン抵抗 | | | 01 |
| R1 | **HF756100** | Carbon Resistor | 1.0K 1/4 J | カーボン抵抗 | | | 01 |
| | **V0010400** | Power Supply Unit | | 電源ユニット（E） | E | | 14 |
| | **V0010500** | Power Supply Unit | | 電源ユニット（N） | N | | 22 |
| | **V0010300** | Power Supply Unit | | 電源ユニット（U） | U | | 14 |
| | **X0657A00** | Speaker | 13.0cm 4ohm 10W | スピーカ | | 2 | 06 |
| | **VU456000** | Rubber Contact | PEDAL | 接点ゴムドーム | | 3 | 03 |
| ⚠ | **VC843500** | Push Switch | SDDLB1216A J.U.C.S | プッシュSW | POWER | | 03 |
| | **XU445A00** | Power Transformer | J/UL/CSA A | 電源トランス | U | | 09 |
| | **XU446A00** | Power Transformer | IEC65 E | 電源トランス | E | | 09 |
| | **XU447A00** | Power Transformer | N IEC65 E | 電源トランス | N | | 09 |
| | **VY846700** | Rubber Contact | GH 2M OCT | シーソードームD－C# | D0-C1#,D1-C2#,D2-C3#,D3-C4#,D4-C5#,D5-C6# | 6 | 08 |
| | **VY846800** | Rubber Contact | GH 2M OCT | シーソードームA－C# | A-1-C0# | | 08 |
| | **VY846900** | Rubber Contact | GH 2M OCT | シーソードームD－C | D6-C7 | | 08 |

*: New Parts **（新規部品）**

RANK: Japan only